AVX

A KYOCERA GROUP COMPANY

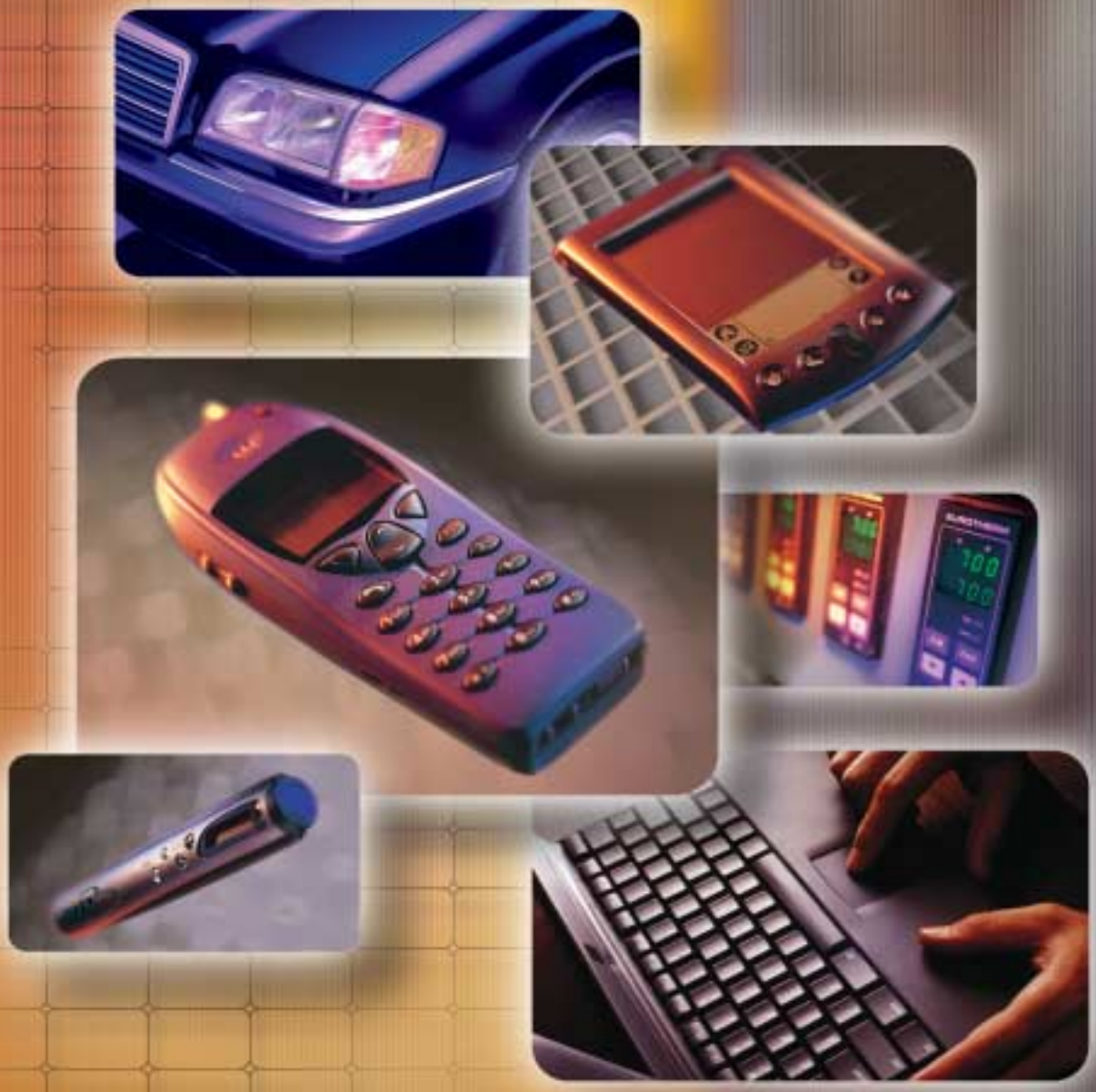

Kyocera Electronic Components

Table of Contents

RESISTORS

Thick Film Chip Resistors 2-3
Low Resistance Chip Resistors 4
Chip Resistor Arrays 5-7
Chip Resistor Networks 8
Test Conditions 9-10
Packaging 11
Recommended Land Pattern 12
Sample Kit 13

TIMING DEVICES

Frequency Band Chart 14
MHz Band Ceramic Resonators 15-22
SAW Resonators 23-25
MHz Band Quartz Crystal 26-27
Clock Oscillators 28-36
VCO (Voltage Controlled Oscillators) 37-41
TCXO (Temperature Compensated Crystal Oscillators) 42-45

FILTERS & RF MODULE

KHz Band Ceramic IF Filters 46-47
SAW Filters (Surface Acoustic Wave) 48-54
Antenna Switch Module 55-58

EMC COMPONENTS

EMI Filters 59-63

ACOUSTIC GENERATORS

Piezo Ceramic Elements 64-65
Piezo Buzzers 66

TRIMMER CAPACITORS

Trimmer Capacitors 67-73

NOTICE: Specifications are subject to change without notice. Contact your nearest AVX Sales Office for the latest specifications. All statements, information and data given herein are believed to be accurate and reliable, but are presented without guarantee, warranty, or responsibility of any kind, expressed or implied. Statements or suggestions concerning possible use of our products are made without representation or warranty that any such use is free of patent infringement and are not recommendations to infringe any patent. The user should not assume that all safety measures are indicated or that other measures may not be required. Specifications are typical and may not apply to all applications.

Resistor Product Discontinuation & Update

We would like to take this opportunity to thank you for your patronage and the many years of support you have given to our resistive products. As you know we are de-emphasizing the product line and would like to inform you of our decision to re-alignment our product offering.

AVX will expand our focus on our 0408 and smaller resistor array products and discontinue to offer our larger case size resistor chip series along with the 1206 resistor arrays. This will be accomplished in several stages over the next twelve months. Please refer to each product series below and the effective dates we will cease to supply the products.

- **Chip Resistor Series (CR63, CR32, CR21, CR10)**
  Final Ship Date: February 1st, 2004

- **Chip Resistor Series (CR05)**
  Final Ship Date: August 1st, 2004

- **1206 Resistor Array Series (CRA3A4E, CRB3A4E, CRC3A4E)**
  Final Ship Date: August 1st, 2004

We would like to work closely with you during the discontinuation period and minimize any inconveniences that may arise. Should you have any questions or comments, please contact KDP Marketing.

Thick Film Chip Resistors

CR, CJ Series

FEATURES

- Low Noise
- Nickel Barrier Terminations

APPLICATION

- General Purpose

HOW TO ORDER

CR 05 - 472 J - H

Packaging
T = 7" Reel/Punched Paper Tape (5,000 pcs/reel) except CR05
H = 7" Reel/Punched Paper Tape (10,000 pcs/reel, 2mm pitch taping) CR03 and CR05
D = 10" Reel/Punched Paper Tape (10,000 pcs/reel) CR32, CR21, CR10

Resistance Tolerance
D = ±0.5% J = ±5%
F = ±1% Blank = Chip Jumper

Resistance Value (3 digits or 4 digits)
Example: 2 significant figures and 1 multiplier
R indicator decimal or values <10Ω
Chip Jumper = 000

Size (EIA)
03 = 0201 21 = 0805
05 = 0402 32 = 1206
10 = 0603

Series
CR = Resistor
CJ = Jumper

STRUCTURE AND MATERIAL

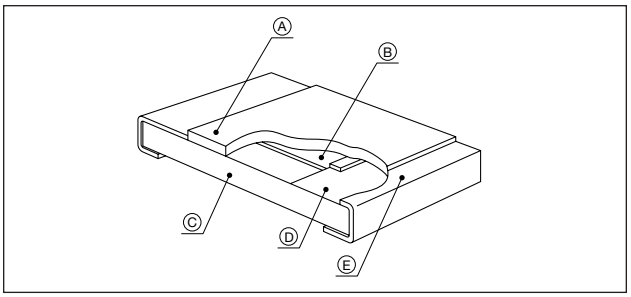

Code	Structure	Material
A	Coating	Glass or Epoxy
B	Resistor	RuO_2 Resistor (The same material of Termination for chip jumper)
C	Substrate	96% Alumina
D	Termination	Silver
E	Plating	(Ni, Sn-Pb) Plating

DIMENSIONS

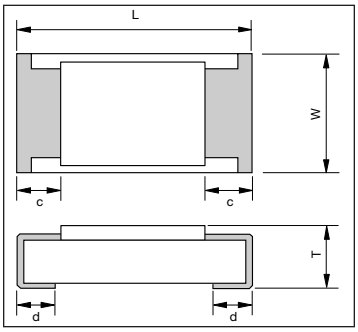

millimeters (inches)

	CR03, CJ03 (0201)	CR05, CJ05 (0402)	CR10, CJ10 (0603)	CR21, CJ21 (0805)	CR32, CJ32 (1206)
W	0.30±0.03 (0.012±0.001)	0.50±0.05 (0.020±0.002)	$0.80^{+0.15}_{-0.10}$ ($0.031^{+0.006}_{-0.004}$)	$1.25^{+0.15}_{-0.10}$ ($0.050^{+0.006}_{-0.004}$)	$1.55^{+0.15}_{-0.10}$ ($0.061^{+0.006}_{-0.004}$)
L	0.60±0.03 (0.024±0.001)	1.00±0.05 (0.039±0.002)	1.60±0.10 (0.063±0.004)	2.00±0.10 (0.080±0.004)	3.10±0.10 (0.122±0.004)
C	0.15±0.10 (0.006±0.004)	0.20±0.15 (0.008±0.006)	0.25±0.20 (0.010±0.008)	0.35±0.20 (0.014±0.008)	0.45±0.20 (0.018±0.008)
d	0.15±0.05 (0.006±0.002)	0.20±0.10 (0.008±0.004)	$0.20^{+0.20}_{-0.15}$ ($0.008^{+0.008}_{-0.006}$)	0.40±0.20 (0.016±0.008)	0.45±0.20 (0.018±0.008)
T	0.23±0.05 (0.009±0.002)	0.35±0.05 (0.014±0.002)	0.50±0.10 (0.020±0.004)	0.55±0.10 (0.022±0.004)	$0.55^{+0.10}_{-0.05}$ ($0.022^{+0.004}_{-0.002}$)

SPECIFICATIONS

Series	CR03 (0201)	CR05 (0402)	CR10 (0603)	CR21 (0805)	CR32 (1206)
Rated Power	0.050 (1/20) W	0.0625 (1/16) W	0.10 (1/10) W	0.125 (1/8) W	0.25 (1/4) W
Max. Working Voltage	15V	50V	50V	100V	200V
Resistance Tolerance	J = ±5%	F = ±1% J = ±5%	D = ±0.5% F = ±1% J = ±5%	D = ±0.5% F = ±1% J = ±5%	D = ±0.5% F = ±1% J = ±5%
Resistance Value Range	10Ω to 1MΩ	10Ω to 1MΩ : F 1.0Ω to 10MΩ : J	10Ω to 1MΩ : D 10Ω to 1MΩ : F 1.0Ω to 10MΩ : J	10Ω to 1MΩ : D 10Ω to 1MΩ : F 1.0Ω to 10MΩ : J	10Ω to 1MΩ : D 10Ω to 1MΩ : F 1.0Ω to 10MΩ : J
Working Temperature	-55 to +125°C	-55 to +125°C	-55 to +125°C	-55 to +125°C	-55 to +125°C

Thick Film Chip Resistors

CR, CJ Series

SPECIFICATIONS

CJ Series

Part Number	CJ03	CJ05, CJ10, CJ21 (0402, 0603, 0805 Type)	CJ32 (1206 Type)
Rated Current	0.5A (70°C)	1A (70°C)	2A (70°C)
Resistivity	50mΩ max.	50mΩ max.	50mΩ max.
Working Temperature	-55 to +125°C	-55 to +125°C	-55 to +125°C

HOW TO CALCULATE RATED VOLTAGE

$E = \sqrt{P \cdot R}$

E = Rated Voltage (V)
P = Rated Power (W)
R = Standard Resistance Value (Ω)

Rated voltage should be lower than max. working voltage.

RECOMMENDED LAND PATTERN

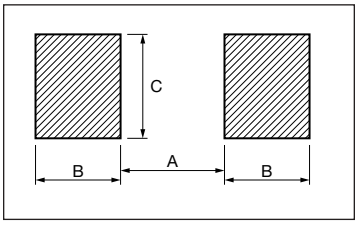

millimeters (inches)

EIA Size	0201	0402	0603	0805	1206
A	0.25 (0.010)	0.50 (0.020)	0.80 (0.031)	1.00 (0.039)	2.00 (0.079)
B	0.225 (0.009)	0.40 (0.016)	0.70 (0.028)	0.80 (0.031)	0.80 (0.031)
C	0.30 (0.012)	0.50 (0.020)	0.80 (0.031)	1.20 (0.047)	1.50 (0.059)

MARKING

Marking available as follows:
Series: CR32, CJ32, CR21, CJ21, CR10, CJ10
3 digit indication
Example: 473=47x10³ = 47000 Ω = 47 kΩ
0 = 0 Ω (Jumper)
100 = 10 Ω
102 = 1 kΩ
105 = 1 MΩ

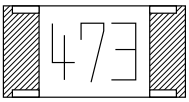

Series: CR03, CJ03, CR05 and CJ05 - No marking

Note: On CR32 4 digit marking is standard for ±1% and ±0.5% tolerances.

DERATING CURVE

Rated power should be reduced as below when temperature become higher.

Under high temperature, power derated as follows:

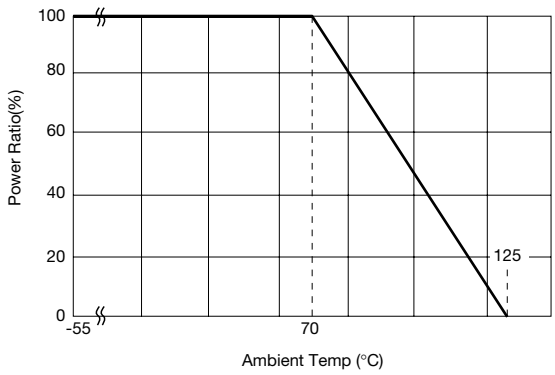

STANDARD RESISTANCE VALUE

E24	1.0	1.1	1.2	1.3	1.5	1.6	1.8	2.0	2.2
	2.4	2.7	3.0	3.3	3.6	3.9	4.3	4.7	5.1
	5.6	6.2	6.8	7.5	8.2	9.1			

For ±1% and ±.5% Tolerance

E96	10.0	10.2	10.5	10.7	11.0	11.3	11.5	11.8	12.1	12.4
	12.7	13.0	13.3	13.7	14.0	14.3	14.7	15.0	15.4	15.8
	16.2	16.5	16.9	17.4	17.8	18.2	18.7	19.1	19.6	20.0
	20.5	21.0	21.5	22.1	22.6	23.2	23.7	24.3	24.9	25.5
	26.1	26.7	27.4	28.0	28.7	29.4	30.1	30.9	31.6	32.4
	33.2	34.0	34.8	35.7	36.5	37.4	38.3	39.2	40.2	41.2
	42.2	43.2	44.2	45.3	46.4	47.5	48.7	49.9	51.1	52.3
	53.6	54.9	56.2	57.6	59.0	60.4	61.9	63.4	64.9	66.5
	68.1	69.8	71.5	73.2	75.0	76.8	78.7	80.6	82.5	84.5
	86.6	88.7	90.9	93.1	95.3	97.6				

TEMPERATURE CHARACTERISTICS

Resistance (Ω)	TCR (ppm/°C)
D, F 10≤ R ≤1M	–100 to +100
J R <10 10≤ R ≤1M 1M< R	 –100 to +600 –200 to +200 –500 to +300

Low Resistance Chip Resistors

LR Series

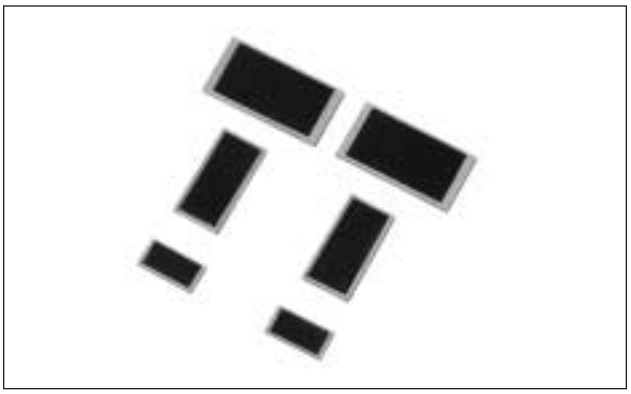

FEATURES

Suitable for voltage detector circuit of mobile computing device and cellular phone.

HOW TO ORDER

LR 63 - R100 F - U

Packaging
T = Paper Taping (LR32), 5,000 pcs/7" reel
U = Plastic Taping, (LR50, LR63), 4,000 pcs/7" reel

Resistance Tolerance
K = ±10%
F = ±1%

Resistance Value (4 digits)
R020 = 20mΩ
R100 = 100mΩ
R1000 = 1000mΩ

Size (EIA)
32 = 1206
50 = 1020
63 = 2512

Series
LR

DIMENSIONS

millimeters (inches)

LR32, LR63

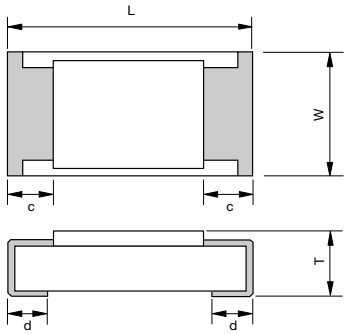

LR50

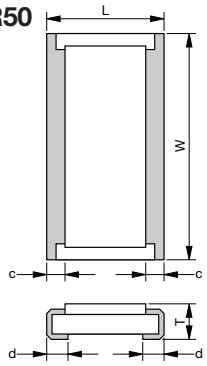

	LR32 (1206)	LR50 (1020)	LR63 (2512)
W	$1.55^{+0.15}_{-0.10}$ ($0.061^{+0.006}_{-0.004}$)	5.00±0.20 (0.197±0.008)	3.20±0.20 (0.126±0.008)
L	3.10±0.10 (0.122±0.004)	2.50±0.20 (0.098±0.008)	6.30±0.20 (0.248±0.008)
c	0.25±0.20 (0.010±0.008)	0.20±0.15 (0.008±0.006)	0.45±0.20 (0.018±0.008)
d	0.45±0.20 (0.018±0.008)	0.50±0.20 (0.020±0.008)	0.45±0.20 (0.018±0.008)
T	$0.55^{+0.10}_{-0.05}$ ($0.022^{+0.004}_{-0.002}$)	0.60±0.10 (0.024±0.004)	0.60±0.10 (0.024±0.004)

SPECIFICATIONS

Series	Rated Power	Max. Working Voltage	Resistance Tolerance	Resistance Value	Working Temperature	Temperature Characteristics
LR32 (1206)	0.5W (1/2) W	707mV	K = ±10%	20 to 50mΩ	-55 to +125°C	±3000ppm/°C
			F = ±1%	100 to 149mΩ		±150ppm/°C
				150 to 1000mΩ		±100ppm/°C
LR50 (1020)	1W	316mV	F = ±1%	20 to 29mΩ	-55 to +125°C	±150ppm/°C
				30 to 100mΩ		±100ppm/°C
LR63 (2512)	1W	574mV	F = ±1%	100 to 330mΩ	-55 to +125°C	±100ppm/°C

Chip Resistor Arrays

CRA Series (Convex Scallop Corner Type)

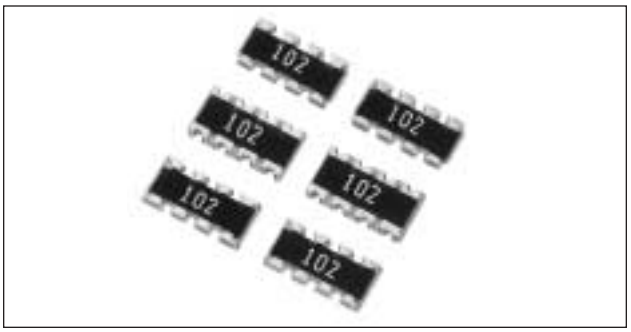

Chip Resistor Arrays have several resistor elements integrated as a single component.

FEATURES

- Reduction in mounting process & costs
- Save PCB space
- Reduction of inventory control costs

APPLICATIONS

- Computer
- Printer
- Hard Disk Drive
- CD-ROM

HOW TO ORDER

CRA3A 4E 103 J T

Packaging
T = Paper Taping, 5,000 pcs/reel

Resistance Tolerance
J = ±5%
Blank = Chip Jumper Arrays

Resistance Value (3 digits)
Chip Jumper Arrays = 000

Number of Elements
4E = 4 Elements

Series

CIRCUIT DIAGRAM

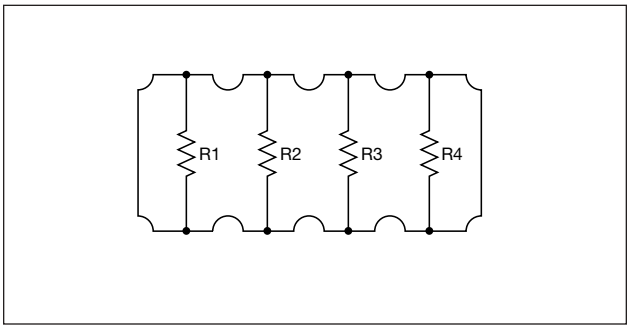

RATING

Chip Resistor Arrays	
Item	**Rating**
Rated Power (70°C)*	1/16W Element
Max. Working Voltage	50V
Max. Overload Voltage	100V
Resistance Value	J = 10Ω to 2.2MΩ
Tolerance	J±5%
Working Temperature	-55 to +125°C
Number of Elements	4E = 4 Elements

*Rated voltage = 50V or $\sqrt{\text{Rated power x Resistance value}}$, whichever is less

Chip Jumper Arrays	
Item	**Rating**
Rated Current	1A
Conductive Resistance Value	50MΩ max.
Resistance Value	Zero ohms (0 ± .5 ohms)
Working Temperature	-55 to +125°C

DIMENSIONS

mm (inches)

	4 Elements CRA3A4E Series
Style	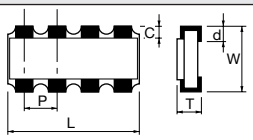
W	1.60±0.15 (0.063±0.006)
L	3.20±0.15 (0.126±0.006)
c	0.30±0.20 (0.012±0.008)
d	0.20±0.15 (0.008±0.006)
t	0.50±0.10 (0.020±0.004)
p	0.80 typ (0.031)

Detailed specifications are available on request.

Chip Resistor Arrays

CRB Series (Concave Type)

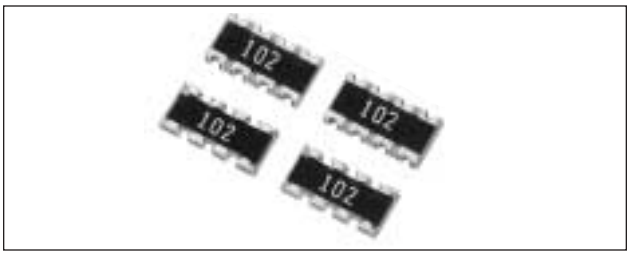

Chip Resistor Arrays have several resistor elements integrated as a single component.

2 Resistors Circuit

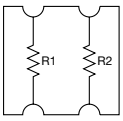

R1=R2

4 Resistors Circuit

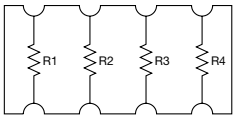

R1=R2=R3=R4

8 Resistors Circuit

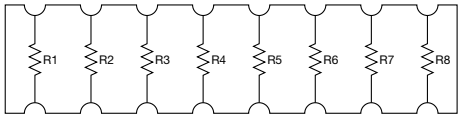

R1=R2=R3=R4=R5=R6=R7=R8

FEATURES

- Reduction in mounting process & costs
- Save PCB space
- Reduction of inventory control costs

APPLICATIONS

- Computer
- Hard Disk Drive
- Printer
- CD-ROM

HOW TO ORDER

CRB 1A 2E 103 J T

Series

Size
1A = 0606 size
2A = 0804 size
3A = 1206 size
6A = 2506 size

Number of Elements
2E = 2 Elements
4E = 4 Elements
8E = 8 Elements

Resistance Value (3 digits)
Chip Jumper Arrays = 000

Resistance Tolerance
J = ±5%
G = ±2%
Blank = Chip Jumper Arrays

Packaging
T = Paper Taping
- CRB1A 10,000 pcs/7" reel
- CRB2A 10,000 pcs/7" reel
- CRB3A 5,000 pcs/7" reel

U = Plastic Taping
- CRB6A 4,000 pcs/7" reel

RATING

Chip Resistor Arrays	
Item	**Rating**
Rated Power (70°C)*	1/16W Element
Max. Working Voltage	50V
Max. Overload Voltage	100V
Resistance Value	10Ω to 2.2MΩ (CRB6A 1MΩ max.)
Tolerance	J±5% (CRB6A G ± 2% only)
Working Temperature	-55 to +125°C

*Rated voltage = 50V or $\sqrt{\text{Rated power x Resistance value}}$, whichever is less

Chip Jumper Arrays	
Item	**Rating**
Rated Current	1A
Conductive Resistance Value	50MΩ max.
Resistance Value	Zero ohms (0 ± .5 ohms)
Working Temperature	-55 to +125°C

DIMENSIONS

millimeters (inches)

CRB1A2E

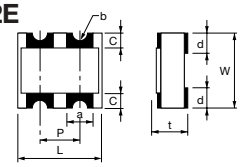

Code	W	L	C	d	t	a	b	P
Dim.	1.60±0.15 (0.063±0.006)	1.60±0.20 (0.063±0.008)	0.30±0.20 (0.012±0.008)	0.40±0.15 (0.016±0.006)	0.60±0.10 (0.024±0.006)	0.50±0.15 (0.020±0.006)	0.30±0.10 (0.012±0.004)	0.80±0.10 (0.031±0.004)

No Marking on chips

CRB2A4E

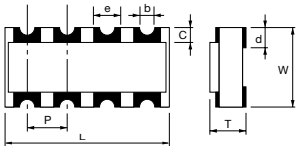

Code	L	W	T	P	b	c	d	e
Dim.	2.00±0.10 (0.079±0.004)	1.00±0.10 (0.039±0.004)	0.40±0.10 (0.016±0.004)	0.50 typ (0.020 typ)	ø0.15 typ (ø0.006 typ)	0.20±0.15 (0.008±0.006)	0.25±0.015 (0.010±0.006)	0.25 typ (0.010 typ)

CRB3A4E

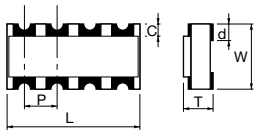

Code	W	L	C	D	T	P
Dim.	1.60±0.15 (0.063±0.006)	3.20±0.15 (0.126±0.006)	0.30±0.20 (0.012±0.008)	0.40±0.15 (0.016±0.006)	0.60±0.10 (0.024±0.004)	0.80 typ (0.031 typ)

CRB6A8E

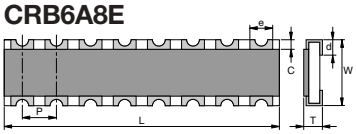

Code	L	W	T	P	c	d	e (top)	e (bottom)
Dim.	6.40±0.20 (0.252±0.008)	1.60±0.20 (0.063±0.008)	0.60±0.10 (0.024±0.004)	0.80 typ (0.031 typ)	0.30±0.20 (0.012±0.008)	0.40±0.15 (0.016±0.006)	0.50±0.10 (0.020±0.004)	0.40±0.15 (0.016±0.006)

Detailed specifications are available on request.

Chip Resistor Arrays

CRC Series (Convex Square Corner Type)

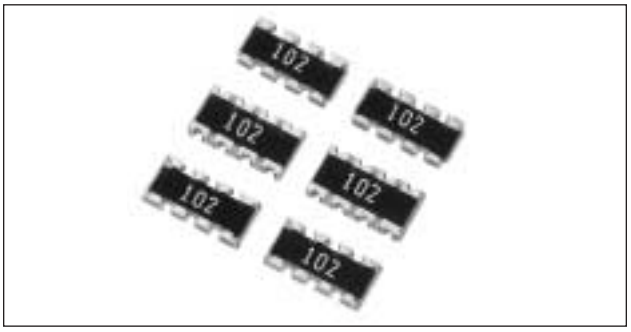

Chip Resistor Arrays have several resistor elements integrated as a single component.

2 Resistors Circuit

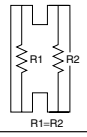

4 Resistors Circuit

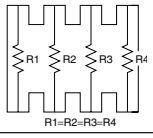

8 Resistors Circuit

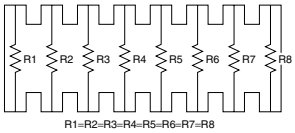

FEATURES

- Reduction in mounting process & costs
- Save PCB space
- Reduction of inventory control costs

APPLICATIONS

- Computer
- Printer
- Hard Disk Drive
- CD-ROM

HOW TO ORDER

CRC 2A 4E 103 J T

Series

Size
- 11A = 0404 size
- 2A = 0804 size
- 3A = 1206 size
- 4A = 1506 size

Number of Elements
- 2E = 2 Elements 8E = 8 Elements
- 4E = 4 Elements

Resistance Value (3 digits)
- Chip Jumper Arrays = 000

Resistance Tolerance
- J = ±5%
- Blank = Chip Jumper Arrays

Packaging
- T = Paper Taping
  - CRC2A 10,000 pcs/7" reel
  - CRC3A 5,000 pcs/7" reel
  - CRC4A 5,000 pcs/7" reel
- H = Paper Taping
  - CRC11A 10,000 pcs/7" reel

RATING

Chip Resistor Arrays	
Item	**Rating**
Rated Power (70°C)*	1/16W Element
Max. Working Voltage	50V (25V CRC4A)
Max. Overload Voltage	100V (50V CRC4A)
Resistance Value	J = 10Ω to 2.2MΩ (CRC4A8E 1MΩ max.)
Tolerance	J±5%
Working Temperature	-55 to +125°C

*Rated voltage = 50V or $\sqrt{\text{Rated power x Resistance value}}$, whichever is less

Chip Jumper Arrays	
Item	**Rating**
Rated Current	1A
Conductive Resistance Value	50MΩ max.
Resistance Value	Zero ohms (0 ± .5 ohms)
Working Temperature	-55 to +125°C

DIMENSIONS

millimeters (inches)

CRC11A

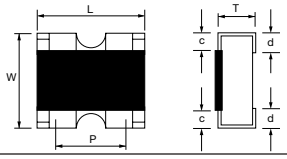

Code	W	L	c	d	t	P
Dim.	1.00±0.10 (0.040±0.004)	1.00±0.10 (0.040±0.004)	0.20±0.15 (0.008±0.006)	0.20±0.15 (0.008±0.006)	0.35±0.06 (0.014±0.002)	0.65 typ (0.026 typ)

No Marking on chips

CRC2A4E

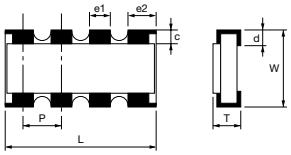

Code	L	W	T	P	c	d	e1	e2
Dim.	2.00±0.10 (0.079±0.004)	1.00±0.10 (0.039±0.004)	0.40±0.10 (0.016±0.004)	0.50 typ (0.020 typ)	0.15±0.15 (0.006±0.006)	0.25±0.15 (0.010±0.006)	0.30±0.10 (0.012±0.004)	0.40±0.10 (0.016±0.004)

No Marking on chips

CRC3A4E

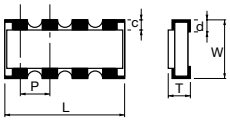

Code	W	L	c	d	T	P
Dim.	1.60±0.15 (0.063±0.006)	3.20±0.15 (0.126±0.006)	0.30±0.20 (0.012±0.008)	0.20±0.15 (0.008±0.006)	0.50±0.10 (0.020±0.004)	0.80 typ (0.031 typ)

No Marking on chips

CRC4A8E

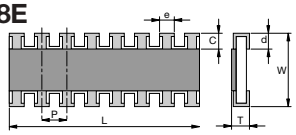

Code	L	W	T	P	c	d	e
Dim.	3.80±0.10 (0.150±0.004)	1.60±0.10 (0.063±0.004)	0.45±0.10 (0.018±0.004)	0.50 typ (0.020 typ)	0.30±0.20 (0.012±0.008)	0.30±0.15 (0.012±0.006)	0.30±0.10 (0.012±0.004)

No Marking on chips

Chip Resistor Networks

RNA4A Series

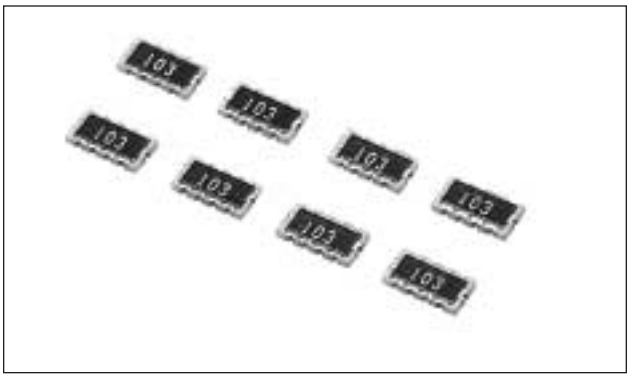

FEATURES

- Reduction in mounting costs & process
- Save PCB space
- Eight resistors in one SMD package
- Reduction of inventory control costs

APPLICATIONS

- Lap Top Computer
- Printer
- CD-ROM
- Notebook Computer
- Hard Disk Drive
- Facsimile

CIRCUIT DIAGRAM

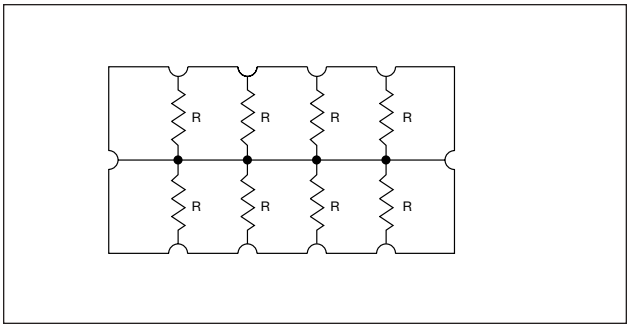

*Nominal resistance value is all the same.

HOW TO ORDER

RNA4A 8E 103 J T

- **Packaging** — T = Plastic Taping, 4,000 pcs/reel
- **Resistance Tolerance** — J = ±5%
- **Resistance Value** (3 digits)
- **Number of Elements** — 8E = 8 Elements
- **Series**

SHAPE AND DIMENSIONS

millimeters (inches)

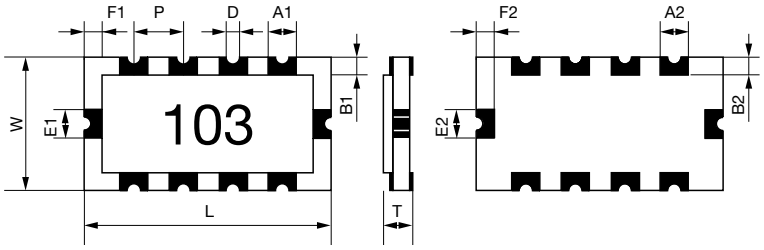

Code	L	W	T	A1	B1	E1	F1	D	P	A2	B2	E2	F2
Dim.	4.00±0.15 (0.157±0.006)	2.10±0.15 (0.083±0.006)	0.60±0.10 (0.024±0.004)	0.50±0.10 (0.020±0.004)	0.25±0.15 (0.010±0.006)	0.50±0.10 (0.020±0.004)	0.30±0.15 (0.012±0.006)	0.30 typ (0.012 typ)	0.80 typ (0.031 typ)	0.40±0.10 (0.016±0.004)	0.40±0.15 (0.016±0.006)	0.50±0.10 (0.020±0.004)	0.35±0.15 (0.014±0.006)

SPECIFICATIONS

Item	Rating
Rated Power (70°C)	1/16W (0.0625W) Element
Max. Working Voltage*	25V
Max. Overload Voltage	50V
Resistance Tolerance	J = ±5%
Resistance Value Range	100Ω to 220KΩ
Number of Elements	8E = 8 Elements
Working Temperature	-55 to +125°C

*Rated voltage = $\sqrt{\text{Rated power x Resistance value}}$, whichever is less

*If resistance value under 100Ω is needed, please contact sales.

STANDARD RESISTANCE VALUE

E6	10	15	22
	33	47	68

ELECTRICAL CHARACTERISTICS

Item		Standard		Test Conditions	
		Resistor	Jumper	Resistor	Jumper
DC Resistance		Within Initial Tolerance	50mΩ max.	Power Condition A (20°C, 65% RH)	
Temperature Characteristics		Resistance (Ω) / TCR (ppm/°C) *D, F 10≤ R ≤1M: –100 to +100 J, CR05 = F R <10: –100 to +600 10≤ R ≤1M: –250 to +250 1M< R: –500 to +300		Test Temperature: 25, 125(°C) $\Delta R/R = R_2 - R_1/R_1 x 1/T_2 - T_1 x 10^6$ ΔR/R = Temp. Coefficient (ppm/°C) T_1 = 25(°C) T_2 = 125(°C) R_1 = T_1 Resistance at (Ω) R_2 = T_2 Resistance at (Ω)	
Short-time Overload	**ΔR/R**	±(2.0%+0.10Ω) max. of the initial value	50mΩ max.	(1) Apply 2.0 x rated voltage for 5 sec. (2.5 x rated voltage for Arrays) (2) Wait 30 minutes (3) Measure resistance CR03 = 30V max. CR05 = 50V max CR10 = 100V max. CR21 = 200V max. CR32 = 400V max. CRA3A, CRB3A, CRC3A = 100V max.	(1) 2A for 5 sec. (CJ03 = 1A) (2) Wait 30 minutes (3) Measure resistance
	Visual	No evidence of mechanical damage intermittent overload			
Intermittent Overload	**ΔR/R**	±(5%+0.1Ω) max. of the initial value	50mΩ max.	(1) Perform 10,000 voltage cycles as follows: ON (2.0 x rated voltage, 2.5 x for Arrays) 1 sec. OFF 25 sec. (2) Stabilization time 30 min. without loading (3) Measure resistance CR03 = 30V max. CR05 = 50V max. CR10 = 150V max. CR21 = 200V max. CR32 = 400V max. CRA, CRB, CRC = 100V max.	(1) Perform 10,000 current cycles as follows: ON (2A) 1 sec. OFF 25 sec. (2) Wait 30 minutes (3) Measure resistance CJ03 = 1A max.
	Visual	No evidence of mechanical damage			
Dielectric Withstanding Voltage		No evidence of mechanical damage		Apply 500 VAC for 1 min. (CR10 300 VAC) (CR05, CRA3A, CRB3A, CRC3A 300 VAC/1 sec. CR03 50 VAC/min.) 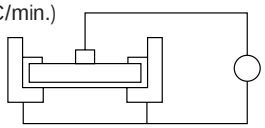 Apply 500V DC (CR05, CRA3A, CRB3A, CRC3A 100V DC CR03 50 VDC)	
Insulation Resistance		• CR03, CJ03 = 10^8Ω min. • CR05, CJ05 = 10^8Ω min. • CR10, CJ10 = 10^9Ω min. • CR21, CJ21 = 10^{10}Ω min. • CR32, CJ32 = 10^{12}Ω min. • CRA3A, CRB3A, CRC3A = 10^9Ω min.			

Chip Resistor Arrays

CR, CJ, CRA, CRB, CRC Series - Test Conditions

MECHANICAL CHARACTERISTICS

Item		Standard		Test Conditions	
		Resistor	Jumper	Resistor	Jumper
Terminal Strength	ΔR/R	±(1%+0.05Ω) max. of the initial value	50mΩ max.	Apply the load as shown: Measure resistance during load application 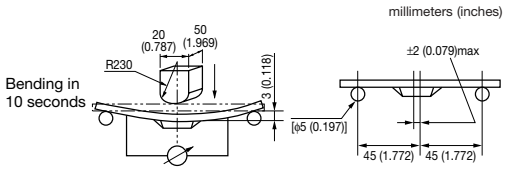 PC Board = Glass epoxy t = 1.60 (0.063)	
	Visual	No evidence of mechanical damage after loading			
Soldering Heat Resistance	ΔR/R	±(1%+0.05Ω) max. of the initial value	50mΩ max.	Immerse into molten solder at 260±5°C for 10±1 sec. Stabilize component at room temperature for 1 hr. Measure resistance.	
	Visual	No evidence of leaching			
Solderability		Coverage ≥95% each termination end		Immerse in Rogin Flux for 2±0.5 sec. and in SN62 solder at 235±5°C for 2±0.5 sec.	
Anti-Vibration Test	ΔR/R	±(1%+0.1Ω) max. of the initial value	50mΩ max.	2 hrs. each in X, Y and Z axis. (TTL 6 hrs.) 10 to 55 Hz sweep in 1 min. at 1.5mm amplitude.	
	Visual	No evidence of mechanical damage			
Solvent Resistance	ΔR/R	±(0.5%+0.05Ω) max. of the initial value	50mΩ max.	Immerse in static state butyl acetate at 20°C to 25°C for 30±5 sec. Stabilize component at room temperature for 30 min. then measure value.	
	Visual	No evidence of mechanical damage			

ENVIRONMENTAL CHARACTERISTICS

Item		Standard		Test Conditions	
		Resistor	Jumper	Resistor	Jumper
Temperature Cycle	ΔR/R	±(1%+0.05Ω) max. of the initial value	50mΩ max.	(1) Run 5 cycles as follows: -55±3°C for 30 min. 125±3°C for 30 min. Room temp. for 10-15 min. (2) Stabilize component at room temperature for 1 hr. then measure value.	
	Visual	No evidence of mechanical damage			
Low Temperature Storage	ΔR/R	±(2%+0.1Ω) max. of the initial value	50mΩ max.	(1) Dwell in -55°C chamber without loading for 1000^{+48}_{-0} hrs. (2) Stabilize component at room temperature for 1 hr. then measure value.	
	Visual	No evidence of mechanical damage			
High Temperature Storage	ΔR/R	±(3%+0.1Ω) max. of the initial value	50mΩ max.	(1) Dwell in 125°C chamber without loading for 1000^{+48}_{-0} hrs. (2) Stabilize component at room temperature for 1 hr. then measure value.	
	Visual	No evidence of mechanical damage			
Moisture Resistance	ΔR/R	±(3%+0.1Ω) max. of the initial value	50mΩ max.	(1) Dwell in temp.: 65°C RH90 to 95% RH chamber without loading for 1000^{+48}_{-0} hrs. (2) Stabilize component at room temperature for 1 hr. then measure value.	
	Visual	No evidence of mechanical damage			
Life Test	ΔR/R	±(3%+0.1Ω) max. of the initial value	50mΩ max.	(1) Temp.: 70±3°C Voltage: (rated voltage) on 90 min. off 30 min. Duration: 1000^{+48}_{-0} hrs. (2) Stabilize component at room temperature for 1 hr. then measure value.	
	Visual	No evidence of mechanical damage			
Loading Life in Moisture	ΔR/R	±(3%+0.1Ω) max. of the initial value	50mΩ max.	(1) Temp.: 40±2°C RH: 90-95% Voltage Cycle: on 90 min. (rated voltage) off 30 min. Duration: 1000^{+48}_{-0} hrs. (2) Stabilize component at room temperature for 1 hr. then measure value.	
	Visual	No evidence of mechanical damage			

Packaging of Chip Component

Automatic Insertion Packaging

TAPE AND REEL

REEL DIMENSIONS

millimeters (inches)

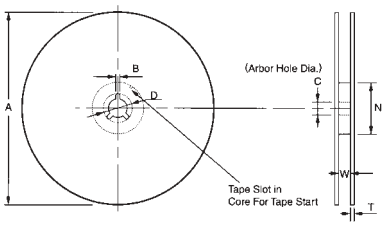

Tape Size	A Max.	B Min.	C	D Min.	N Min.	W	T Max.
8mm	178 (7)	1.50 (0.059)	13.0±0.50 (0.512±0.020)	20.2 (0.795)	50 (1.969)	10.0±1.50 (0.394±0.059)	2.50 (0.098)
	260 (10)						

Metric dimensions will govern.
English measurements rounded and for reference only.

millimeters (inches)

PUNCHED TAPE CONFIGURATION 8MM TAPE ONLY

Tape Size	D_0	E	P_0	P_2	W	F
8mm	1.50 $^{+0.10}_{-0.00}$ (0.059 $^{+0.004}_{-0.000}$)	1.75±0.10 (0.069±0.004)	4.0±0.10 (0.157±0.004)	2.00±0.05 (0.079±0.002)	8.00±0.20 (0.135±0.008)	3.50±0.05 (0.138±0.002)

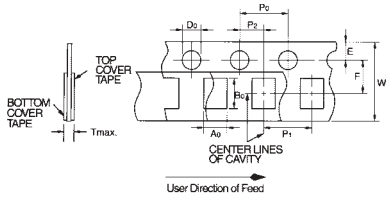

VARIABLE DIMENSIONS

Style	P_1	A_0	B_0	T max.
CR/CJ03 CR/CJ05	2.00±0.10 (0.079±0.004)	0.65±0.10 (0.026±0.004)	1.15±0.10 (0.045±0.004)	0.60 (0.024)
CR/CJ/FR10	4.00±0.10 (0.157±0.004) or 2.00±0.10 (0.079±0.004)	1.10±0.20 (0.043±0.008)	1.90±0.20 (0.075±0.008)	1.10 (0.043)
CR/CJ/FR21	4.00±0.10 (0.157±0.004)	1.65±0.20 (0.065±0.008)	2.40±0.20 (0.094±0.008)	
CR/CJ/FR32		2.00±0.20 (0.079±0.008)	3.60±0.20 (0.142±0.008)	
CRB1A		1.90±0.20 (0.075±0.008)	1.90±0.20 (0.075±0.008)	
CRA3A CRB3A CRC3A		2.00±0.20 (0.079±0.008)	3.60±0.20 (0.142±0.008)	
CRB2A	2.00±0.10 (0.079±0.004)	1.25±0.20 (0.049±0.008)	2.50±0.20 (0.098±0.008)	

PUNCHED CARRIER

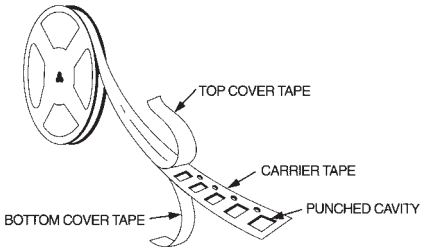

Recommended Land Patterns

RECOMMENDED LAND PATTERNS IS REFERRED THE FOLLOWING FOR EXAMPLE

millimeters (inches)

CRA3A4E Series

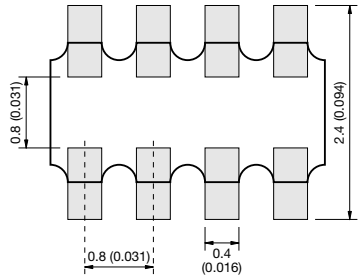

RNA4A8E Series

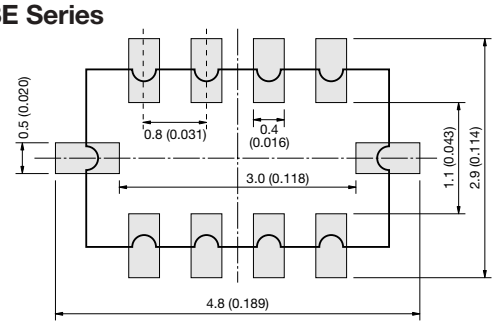

CRB1A2E Series

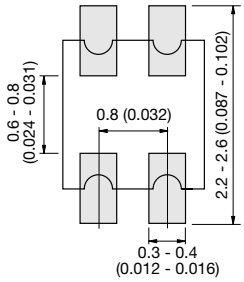

CRB3A4E Series

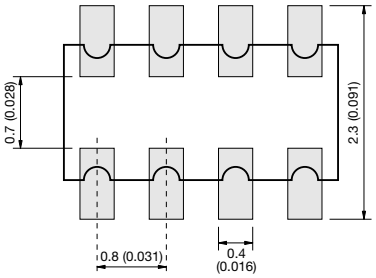

CRB2A4E Series

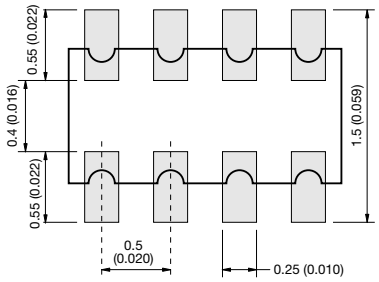

CRC3A4E Series

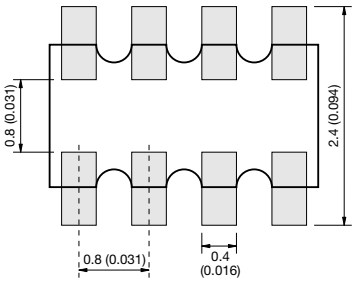

CRC2A4E Series

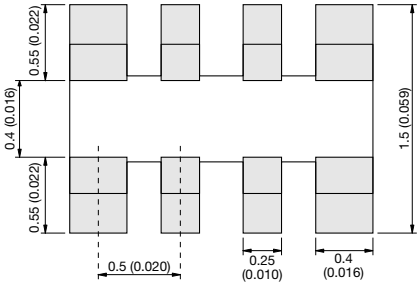

CRC4A8E Series

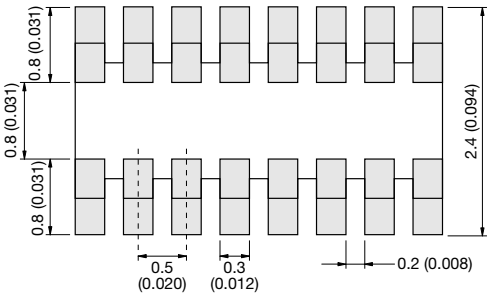

CRB6A8E Series

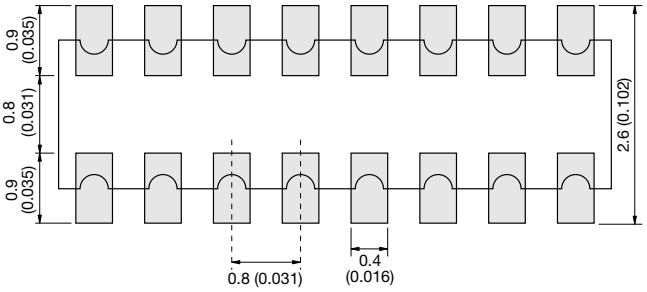

SAMPLE KIT PART NUMBERS

Part Number	Description
CRJ-E6-Kit	Combination 0603, 0805, 1206, 5% parts 21 values per case size 100 pcs. per value (approx.)
CR05-E12-Kit	0402, 5% parts 63 values 100 pcs. per value
CR10J-E12-Kit	0603, 5% parts 63 values 100 pcs. per value (approx.)
CR21J-E12-Kit	0805, 5% parts 63 values 100 pcs. per value (approx.)
CR32J-E12-Kit	1206, 5% parts 63 values 100 pcs. per value (approx.)
CR05F-E24-Kit	0402, 1% parts 63 values 100 pcs. per value
CR10F-E24-Kit	0603, 1% parts 63 values 100 pcs. per value
CR-ARRAY-E6-Kit	Arrays, Various styles, CRA, CRB, CRC, RNA, 5% 13 values per style (approx.) 20 pcs. per value

FREQUENCY BAND CHART

Product Name		Type	Oscillating Frequency (1kHz, 10kHz, 100kHz, 1MHz, 10MHz, 100MHz, 1GHz, 10GHz)	Applications
Ceramic Resonator	MHz Band	Leaded	1.92M – 13.0M	MicroProcessor
		SMD	2.0M – 60.0M	MicroProcessor
SAW Resonator		Leaded	55M – 500M	RF Modulator
		SMD	300M – 500M	Keyless Entry
Clock Oscillator	Clock Oscillator	SMD	8.0M – 75M	MicroProcessor
	TCXO	SMD	12.0M – 26.0M	Telecommunication
Voltage Controlled Oscillator (VCO)	VK Series	SMD	100M – 700M	Telecommunication
	YK Series	SMD	700M – 2.0G	Telecommunication

Product Discontinuation - Leaded Resonators

We would like to thank you for your patronage and support for our products.

AVX is in the process of discontinuing the Leaded MHz Ceramic Resonator offering.
We have chosen the effective dates below so that our customers and distributors may entertain last time purchases.

FINAL Order Acceptance: February 1st, 2004
LAST Shipment: May 1st, 2004

The specific products subject to this notice are: **ALL KBR Series**

2-Terminal (No Built-In Capacitor) LEADED Resonators

- KBR-x.xxM
- KBR-x.xxMS
- KBR-x.xxMSA
- KBR-x.xxMSB
- KBR-x.xxMSE

3-Terminal (Built-In Capacitor) LEADED Resonators

- KBR-x.xxMKC
- KBR-x.xxMKD
- KBR-x.xxMKS
- KBR-x.xxMKE

(Both bulk and T & R packages)

We regret any inconvenience caused by this action.
Should you have any questions or comments, please contact KDP Marketing for details.

MHz Band Ceramic Resonators

KBR, -M, MS, -MSA, -MSB Series

f_O: 1.92 to 13.00MHz

FEATURES

- Small, lightweight design
- Excellent temperature stability
- Low cost
- Bulk packaged 500 pieces per bag or 2000 pieces per reel
- Sold in increments of 2000 pieces

HOW TO ORDER

KBR - 4.00 MSA TR

Packaging
TR = Tape and reel
TF = Ammo pack
□ = Bulk

Resonator Type
MS = 1.92 to 3.57MHz
MSA = 3.58 to 8.00MHz (Washable Type)
MSB = 3.58 to 6.00MHz
M = 8.00 to 13.00MHz

Oscillation Frequency (MHz)

Series

SPECIFICATIONS (KBR-□MS/KBR-□MSA/KBR-□MSB/KBR-□M Series)

Series	MS	MSA/MSB	M
Dimension	Fig. A	Fig. B	Fig. C
Oscillation Frequency	1.92 to 3.50MHz	3.58 to 8.00MHz	8.00 to 13.00MHz
Frequency Tolerance	±0.5%	±0.5%	±0.5%
Resonant Impedance	100Ω Max.	30Ω Max.	40Ω Max.
Temperature Characteristics (-20 to +80°C)	±0.3%	±0.3%	±0.5%

DIMENSIONS

millimeters (inches)

Fig. A

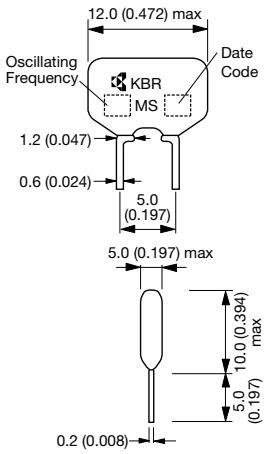

Fig. B

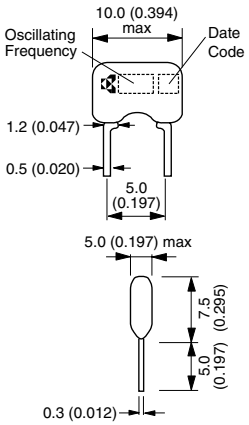

Fig. C

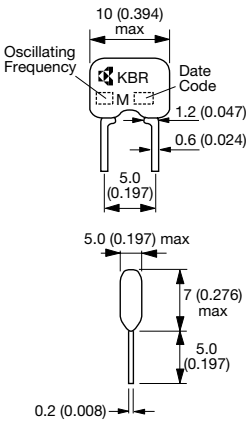

TEST CIRCUIT

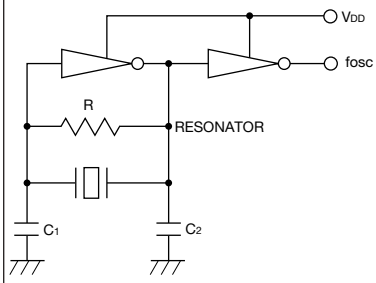

V_{DD} : 5V (2.0 to 8.0MHz)
12V (8.1 to 13.0MHz)
only M Series

R: 1MΩ
C_1,C_2 : 33pF (typ)
IC : 4069 (HEX INVERTER) (MOTOROLA)

Built-in Capacitor

MHz Band Ceramic Resonators KBR-MKS/MKD Series

FEATURES

- Component (Capacitor) cost and space saving
- Mounting cost saving
- High density mounting possible

APPLICATIONS

- Clock for micro computer
- Telephone
- Frequency synthesizer
- Voice synthesizer IC
- Motor control unit
- Remote controller

TEST CIRCUIT

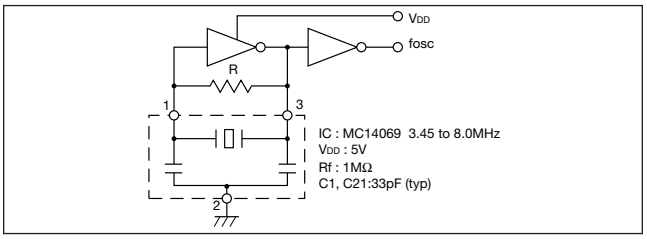

HOW TO ORDER

KBR - 4.00 MKS TR

Packaging
TR = Tape and reel 2,000 pcs
TF = Ammopack
□ = Bulk

Type
MKS = Capacitor built-in low profile type
MKD = Capacitor built-in washable type

Oscillating Frequency (MHz)

Series

TAPING

millimeters (inches)

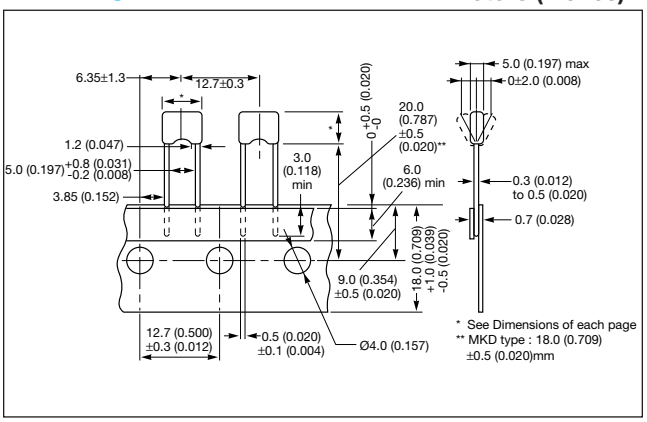

DIMENSIONS

millimeters (inches)

3.52 to 8.0MHz (MKS type)

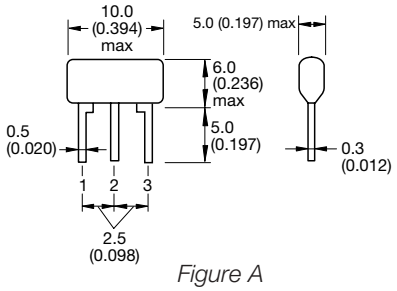

Figure A

3.52 to 8.0MHz (MKD type)

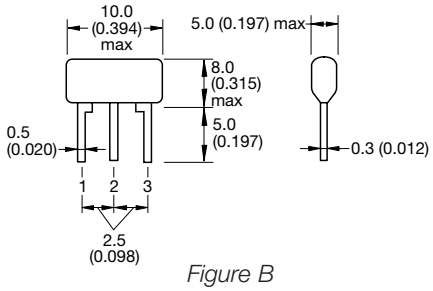

Figure B

SPECIFICATIONS

Series	Frequency Range (MHz)	Figure	Frequency Tolerance	Temperature Stability (-20 to 80°C)	Standard Frequencies (MHz)	Taping
KBR-□MKS	3.52 to 8.00	Fig. A	±0.5%	±0.5%	3.58, 4.00, 4.19, 5.00, 6.00, 8.00	Available
KBR-□MKD	3.52 to 8.00	Fig. B	±0.5%	±0.5%	3.58, 4.00, 4.19, 5.00, 6.00, 8.00	Available

Please contact your local AVX sales office for custom frequency.

MHz Band Ceramic Resonators (SMD) PBRC-G Series

FEATURES

- Excellent frequency stability
- Low profile
- Reflow solderable
- Excellent solderability (Nickel barrier + Au flash termination)

APPLICATIONS

- Car Accessories
- Cam-corders
- Digital Cameras
- PDAs
- PC Peripherals

TEST CIRCUIT

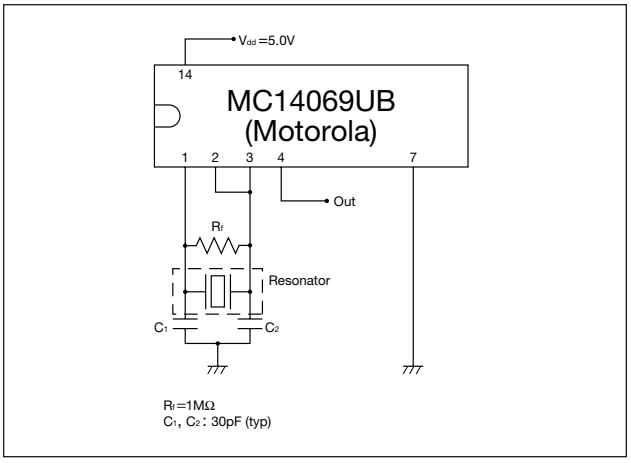

HOW TO ORDER

PBRC - 4.00 G R □

Tolerance
□ = ±0.5% (Standard)
03 = ±0.3% (Option)

Packaging
Tape and reel, 2,000 pcs/reel

G: No Built-in Capacitor

Oscillating Frequency (MHz)
3.58 to 8.00MHz

Series

Note: C1 & C2 are referenced capacitance value to measure each parameter under. Test circuit (IC = MC14069UB).
C1 & C2 values would be modified - depend upon various IC to be used.

DIMENSIONS

millimeters (inches)

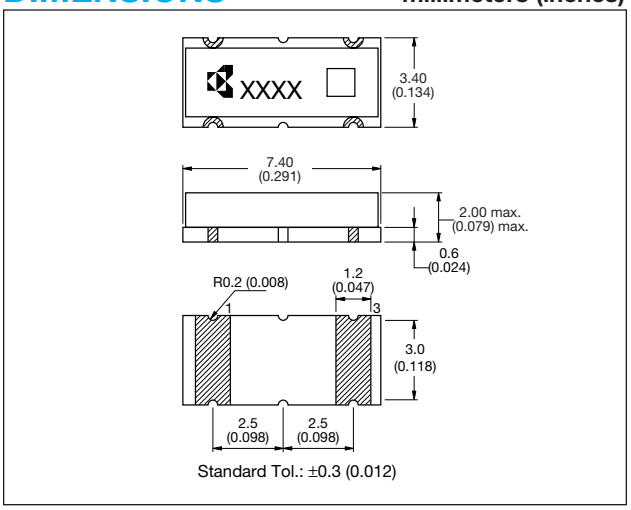

SPECIFICATIONS

Series	Frequency Range	Frequency Tolerance (25°C)	Temperature Stability	IC	Standard Frequency (MHz)
PBRC-G	3.58 to 8.00	±.05% (op. ±0.3%)	±.05% (-40 to 85°C)	MC14069UB MOTOROLA	3.58, 4.00, 4.19, 6.00, 8.00

Recommended Land Pattern

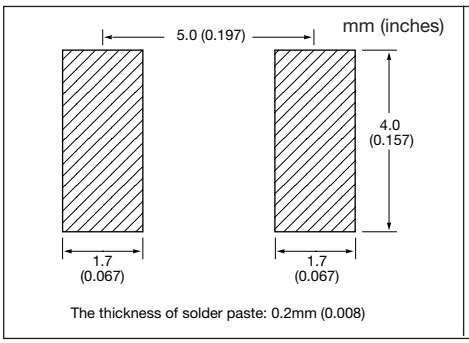

Recommended Reflow Profile

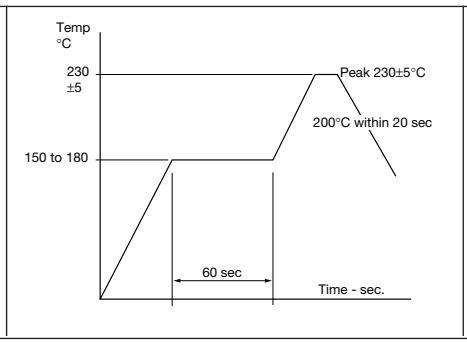

Packaging - Taping

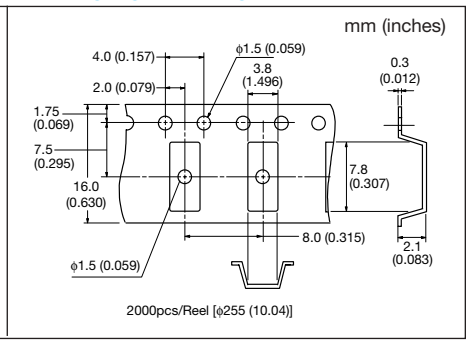

MHz Band Ceramic Resonators (SMD) PBRC-H Series

FEATURES

- Excellent frequency stability
- Low profile
- Reflow solderable
- Excellent solderability (Nickel barrier + Au flash termination)

APPLICATIONS

- Car Accessories
- Cam-corders
- Digital Cameras
- PDAs
- PC Peripherals

TEST CIRCUIT

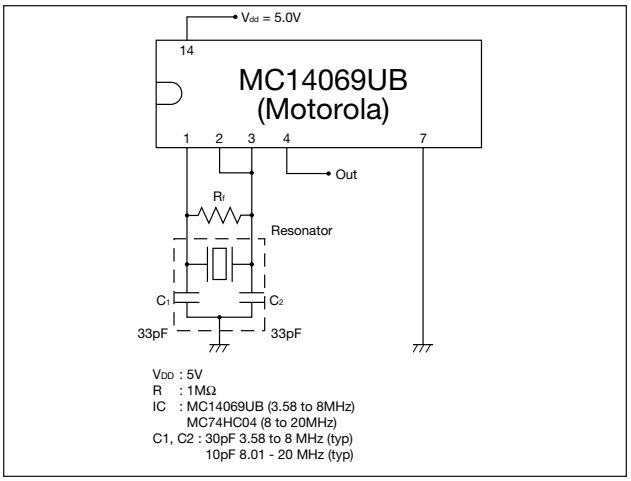

HOW TO ORDER

PBRC - 4.00 H R □

Tolerance

	2.00 to 8.00	8.01 to 20.00
□	±0.5%	±0.7% (Standard)
03	±0.3%	—
05	—	±0.5%

Packaging
Tape and reel, 2,000 pcs/reel

H: Built-in Capacitor

Oscillating Frequency (MHz)
3.58 to 20.00MHz

Series

Note: Please refer to IC Application Guide book for IC matching

DIMENSIONS

millimeters (inches)

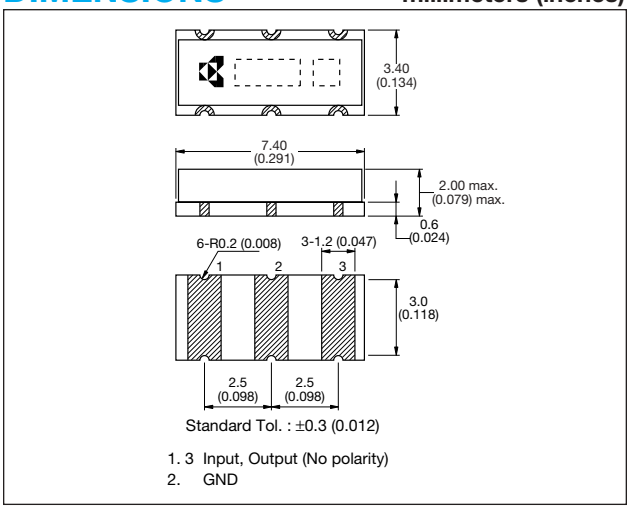

SPECIFICATIONS

Series	Frequency Range (MHz)	Tolerance (25°C)	Temperature Stability	IC	Standard Frequencies
PBRC-H	3.58 to 8.00	±0.5% (op. ±0.3%)	±0.5% (-40 to 85°C)	MOTOROLA MC74HC04	3.58, 4.00, 4.19 6.00, 8.00
	8.01 to 20.00	±0.7% (op. ±0.5%)	±0.1% (-40 to 85°C)	MOTOROLA MC14069UB	10.0, 12.0, 16.0, 20.0

Recommended Land Pattern

mm (inches)

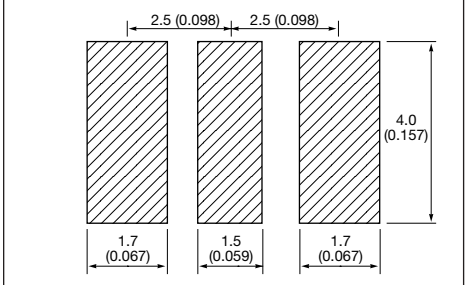

The thickness of solder paste : 0.2mm (0.008)

Recommended Reflow Profile

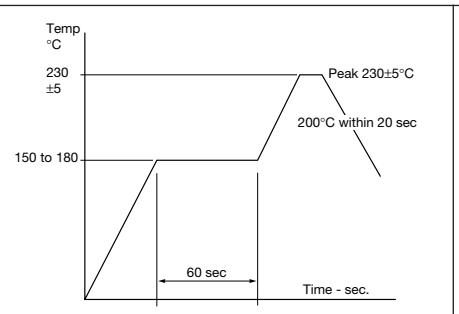

Packaging - Taping

mm (inches)

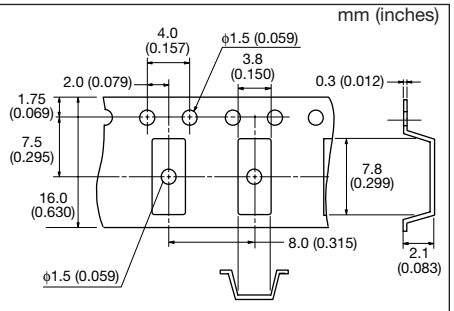

2000 pcs/Reel [ϕ255 (10.04)]

MHz Band Ceramic Resonators (SMD) for Automotive PBRV-H Series

FEATURES

- High reliable, excellent frequency stability
- Robust shock resistant
- Reflow solderable and washable
- Excellent solderability (Nickel barrier + Au flash termination)

APPLICATIONS

- ABS
- ECU
- Air-Bag System

TEST CIRCUIT

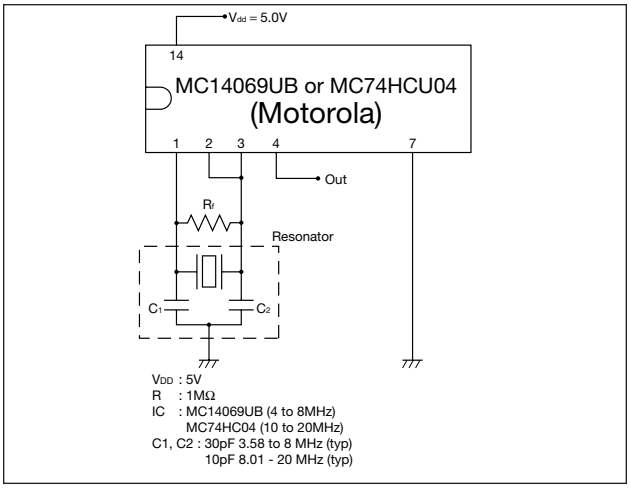

HOW TO ORDER

PBRV - 4.00 H R Y

- **Operating Temperature Range**
  Y = -40 to +125°C
  Z = -40 to +150°C
- **Packaging**
  Tape and reel, 2,000 pcs/reel
- **Built-in Capacitor**
- **Oscillating Frequency (MHz)**
  3.58 to 20.00MHz
- **Series**

Note: Please refer to IC Application Guide book for IC matching

DIMENSIONS

millimeters (inches)

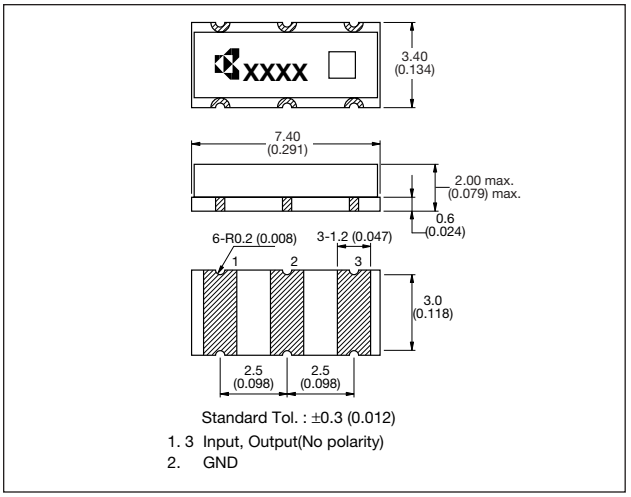

Standard Tol. : ±0.3 (0.012)

1. 3 Input, Output(No polarity)
2. GND

SPECIFICATIONS

Series	Frequency Range (MHz)	Tolerance (25°C)	Temperature Stability	IC	Standard Frequencies
PBRV-H	3.58 to 8.00	±0.5% (op. ±0.3%)	Y = ±0.5% (-40 to 125°C) Z = ±0.5% (-40 to 150°C)	MOTOROLA MC14069UB	4.00, 6.00, 8.00
	8.01 to 20.00	±0.7% (op. ±0.5%)	Y = ±0.1% (-40 to 125°C) Z = ±0.2% (-40 to 150°C)	MOTOROLA MC74HC04	12.0, 16.0, 18.0, 20.0

Recommended Land Pattern

mm (inches)

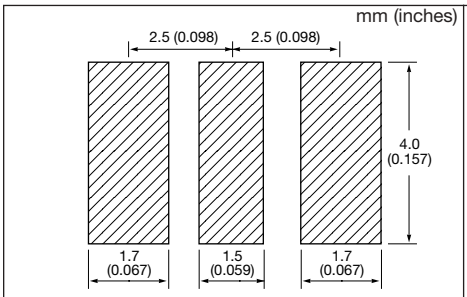

The thickness of solder paste : 0.2mm (0.008)

Recommended Reflow Profile

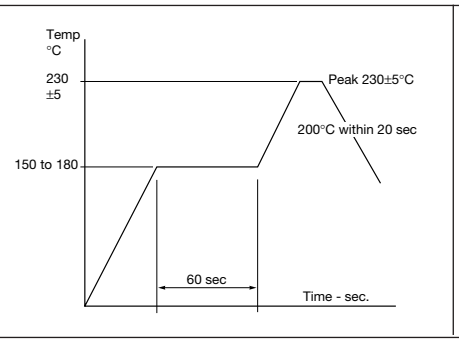

Packaging - Taping

mm (inches)

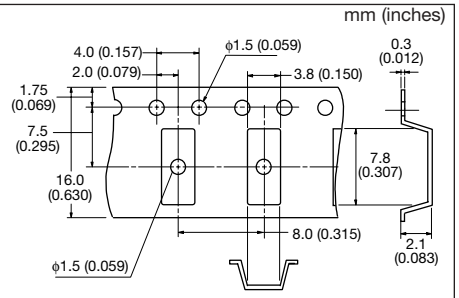

2000 pcs/Reel [ϕ255 (10.04)]

PACKAGING

millimeters (inches)

Reel

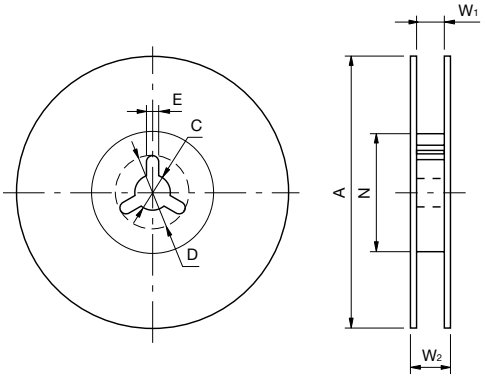

2,000 pcs/reel

Code	A	N	W_1	W_2	C	D	E
Dim.	250±2.00 (9.843±0.079)	80±2.00 (3.150±0.079)	$16.5^{+1.10}_{-0.00}$ ($0.650^{+0.043}_{-0.000}$)	23.6 max. (0.929 max.)	13.0±0.50 (0.512±0.020)	21.0±0.80 (0.827±0.031)	2.00±0.50 (0.079±0.020)

NOTICE

- Handling must be fully cared to avoid any failure, in case it is loaded over rated mechanical shock or vibration.
- Product is available for reflow soldering process, but not applicable for flow soldering.
- Land must be oriented as shown without applying excess stress by bending substrate.

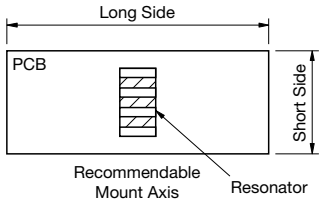

MHz Band Ceramic Resonators (SMD) SSR-B Series

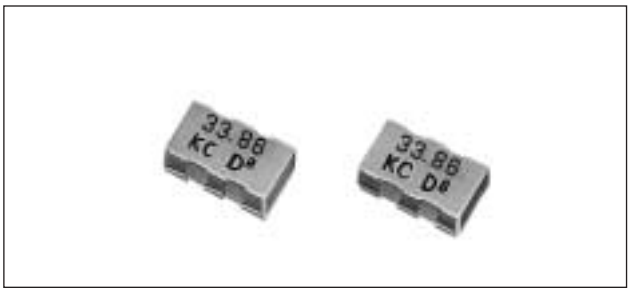

FEATURES

- Miniature size (2.1x3.2x1.5mm)
- High density mounting possible
- Wide frequency range

APPLICATIONS

- CD-ROM
- Hard Disk Drive
- DVD-ROM
- MD
- Printer
- Cellular (CDMA/PCS)
- Portable Electronic Equipment

HOW TO ORDER

SSR - 33.86 B R

- **Packaging** — Tape and reel, 2,000 pcs/reel
- **Type B** — Built-in Capacitor
- **Oscillating Frequency (MHz)**
- **Series**

DIMENSIONS

millimeters (inches)

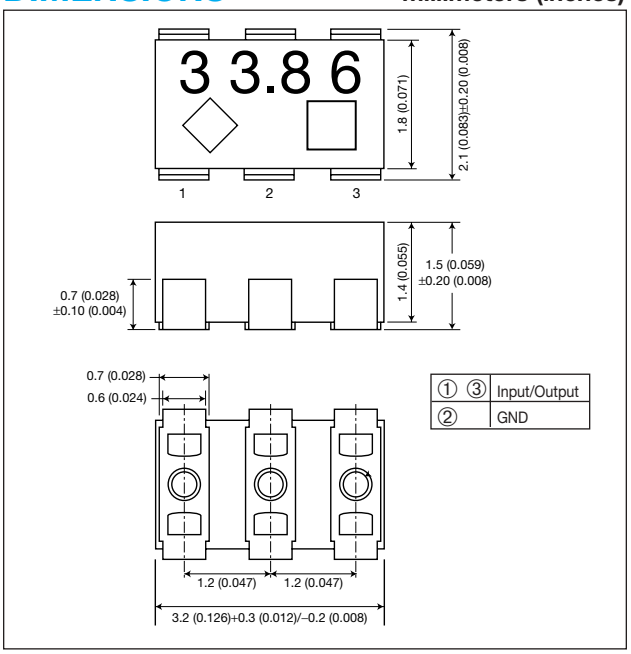

TEST CIRCUIT

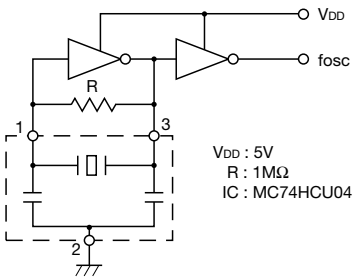

*Special IC matching required for all other circuits

SPECIFICATIONS

Frequency Range	Frequency Tolerance (25°C)	Temperature Stability (-20 to 80°C)	IC	Standard Frequency (MHz)
16.0 to 60.0MHz	±0.5%	±0.3%	MC74HCU04 MOTOROLA	16.93, 20.0, 27.0, 33.86, 50.8

Please contact your local AVX office for IC matching.

Recommended Land Pattern

mm (inches)

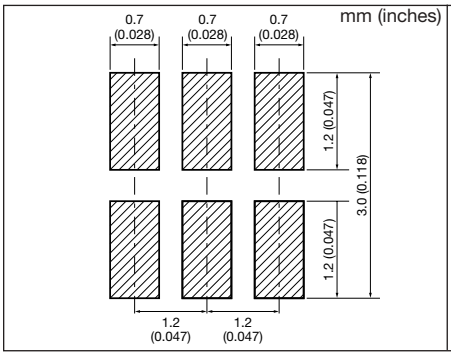

Recommended Reflow Profile

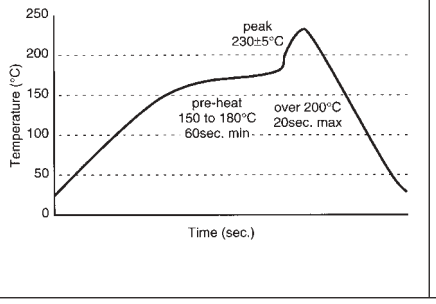

Packaging - Taping

mm (inches)

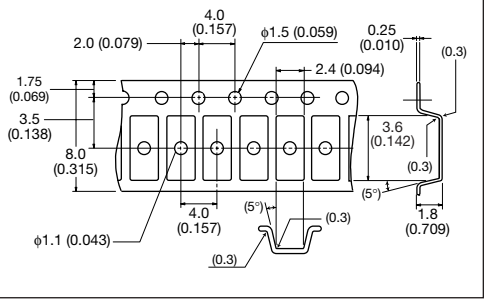

MHz Band Ceramic Resonators (SMD) SSR-D Series

FEATURES

- Fundamental (20 to 30MHz)
- Miniature size (2.5x2.0x1.0mm)
- High density mounting possible
- Wide frequency range
- Washable

APPLICATIONS

- CD-R/W
- Hard Disk Drive
- DVD-ROM
- MD
- Printer
- Cellular (CDMA/PCS)
- Portable Electronic Equipment
- Memory Card

HOW TO ORDER

SSR - 25.00 D R

- **Packaging** — Tape and reel, 2,000 pcs/reel
- **Type**
- **Oscillating Frequency (MHz)**
- **Series**

DIMENSIONS

millimeters (inches)

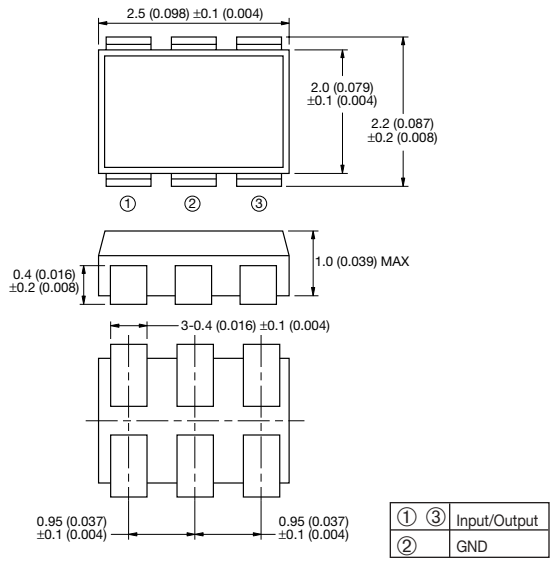

TEST CIRCUIT

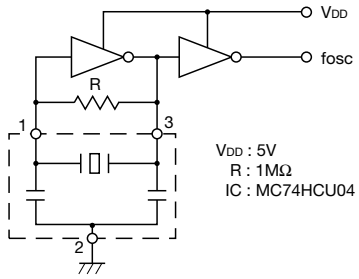

*Special IC matching required for all other circuits

SPECIFICATIONS

Frequency Range	Frequency Tolerance (25°C)	Temperature Stability (-20 to 80°C)	IC	Main Frequency (MHz)
20.0 to 60.0MHz	±0.5%	±0.3%	MC74HCU04 MOTOROLA	20.0, 25.0, 30.0, 33.86, 40.0

Please contact your local AVX office for IC matching.

Recommended Land Pattern

mm (inches)

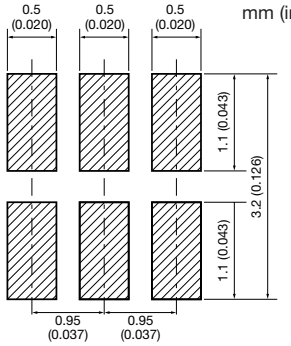

Recommended Reflow Profile

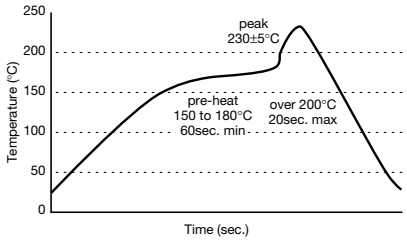

Packaging - Taping

mm (inches)

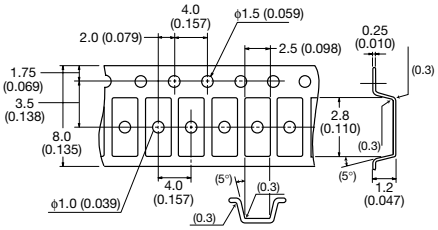

SAW Resonators

KAR Series

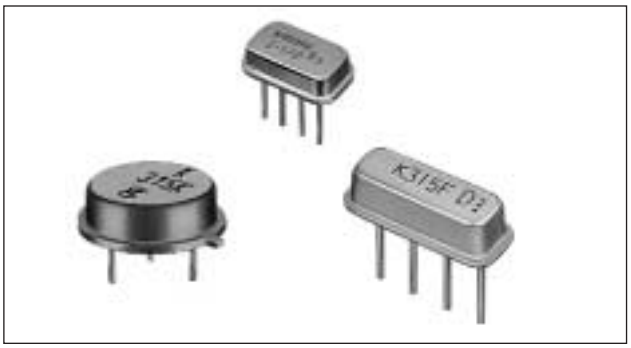

FEATURES

- 2 channels in one package
- Excellent Spurious response
- Adjustment free
- High anti-shock stability
- Low temperature coefficient
- Saving component cost and space

APPLICATIONS

- RF modulator of VCR, video disk player and CATV
- Remote keyless entry, garage openers

HOW TO ORDER

KAR - 91 CS

- **Specification** — Please see Table 1 and Table 2
- **Resonant Frequency (MHz)**
- **Series**

DIMENSIONS

millimeters (inches)

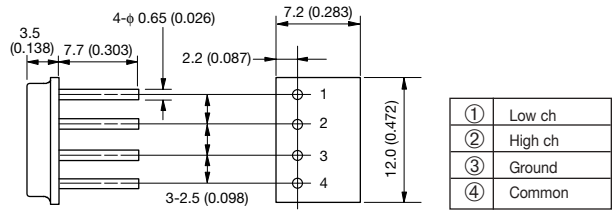

①	Low ch
②	High ch
③	Ground
④	Common

Figure A

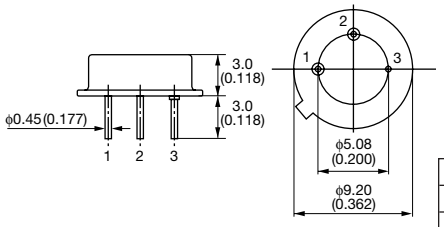

①	Hot
②	Hot
③	Ground

Figure B

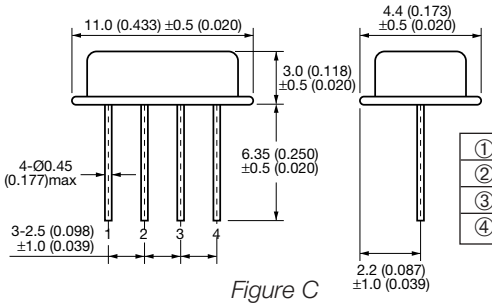

①	Hot
②	Ground
③	Ground
④	Hot

Figure C

SPECIFICATIONS (for RF Module and CATV Converter)

Table 1

Part Number	Channels*	Resonant Frequency (MHz)	Resonant Loss (dB)	Parallel Capacitance (pF)	Temperature Characteristics (ppm/°C)	Dimension
KAR-55CS	W- 3/4	55.240±0.080 62.240±0.080	5.0 Max.	4.8±1 4.8±1	±8	Fig. A
KAR-55CT	U- 2/3	55.240±0.080 61.240±0.080	6.0 Max.	3.6±1 3.7±1	±8	
KAR-61CT	U- 3/4	61.240±0.080 67.240±0.080	5.0 Max.	4.4±1 4.2±1	±8	
KAR-77CS	O- 3/4	77.240±0.080 85.240±0.080	4.5 Max.	3.1±1 2.8±1	±8	
KAR-91CS	J- 1/2	91.240±0.080 97.240±0.080	3.0 Max.	4.0±1 4.0±1	±5	
KAR-211CS	U-13	211.240±0.150	2.7 Max.	3.0±1	±8	
KAR-108CS	CATV	108.200±0.030	3.0 Max.	5.0 Max.	±8	
KAR-117CS	CATV	117.200±0.030	3.0 Max.	5.0 Max.	±8	
KAR-119CS	CATV	119.200±0.030	3.0 Max.	5.0 Max.	±8	

*J = Japan U = United States W = Germany A = Australia O = Eastern Europe

SPECIFICATIONS (for Remote Keyless Entry) — Table 2

Part Number	Resonant Frequency (MHz)	Resonant Loss (dB)	Parallel Capacitance (pF)	Temperature Characteristics (ppm/°C)	Dimension
KAR-303CS	303.875±0.250	2.5 Max.	4.0 Max.	±8 Max.	Fig. A
KAR-304CS	304.300±0.250				
KAR-310CS	310.000±0.250				
KAR-314CS	314.000±0.250		3.2 Max.		
KAR-314CT	314.500±0.250				
KAR-315CS	315.000±0.250				
KAR-320CS	320.650±0.250				
KAR-345CS	345.000±0.250				
KAR-359CS	359.900±0.250				
KAR-417CS	417.500±0.250				
KAR-418CS	418.000±0.250				
KAR-423CS	423.220±0.250				
KAR-432CS	432.920±0.250				
KAR-433CS	433.920±0.250				
KAR-433CT	433.420±0.250				
KAR-479CS	479.500±0.500		2.3 Max.		
KAR-303CK	303.875±0.250	2.5 Max.	4.0 Max.	±8 Max.	Fig. B
KAR-304CK	304.300±0.250				
KAR-310CK	310.000±0.250				
KAR-314CK	314.000±0.250		3.2 Max.		
KAR-314CL	314.500±0.250				
KAR-315CK	315.000±0.250				
KAR-320CK	320.650±0.250				
KAR-345CK	345.000±0.250				
KAR-359CK	359.900±0.250				
KAR-417CK	417.500±0.250				
KAR-418CK	418.000±0.250				
KAR-423CK	423.220±0.250				
KAR-432CK	432.920±0.250				
KAR-433CK	433.920±0.250				
KAR-433CL	433.420±0.250				
KAR-479CK	479.500±0.500		2.3 Max.		
KAR-303CF	303.875±0.250	2.5 Max.	4.0 Max.	±8 Max.	Fig. C
KAR-304CF	304.300±0.250				
KAR-310CF	310.000±0.250				
KAR-314CF	314.000±0.250		3.2 Max.		
KAR-314CG	314.500±0.250				
KAR-315CF	315.000±0.250				
KAR-320CF	320.650±0.250				
KAR-345CF	345.000±0.250				
KAR-359CF	359.900±0.250				
KAR-417CF	417.500±0.250				
KAR-418CF	418.000±0.250				
KAR-423CF	423.220±0.250				
KAR-432CF	432.920±0.250				
KAR-433CF	433.920±0.250				
KAR-433CG	433.420±0.250				
KAR-479CF	479.500±0.500		2.3 Max.		

JPN = Japan U = United States EU = Eastern Europe

The other frequency, please contact your nearest sales office.

SAW Resonators (SMD)

PARS Series

FEATURES

- Frequency range 300 to 480MHz
- 1 port type SMD resonator
- Small size (5.5x3.8mm)
- Low profile (1.5mm max.)
- SMT ceramic package
- High reliability sealing
- Excellent temperature characteristics
- +100ppm to -250ppm (-40 to 85°C)

APPLICATIONS

- Keyless entry systems
- Garage openers
- Security systems

DIMENSIONS

millimeters (inches)

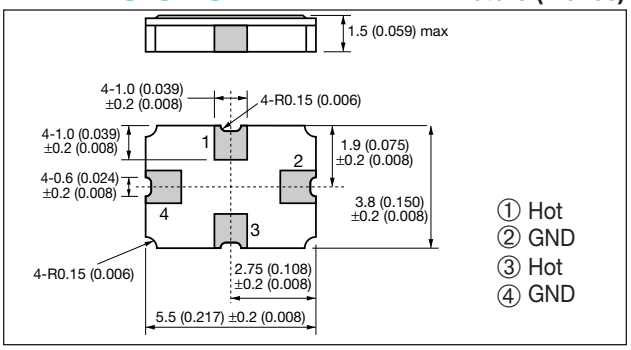

RECOMMENDED LAND PATTERN

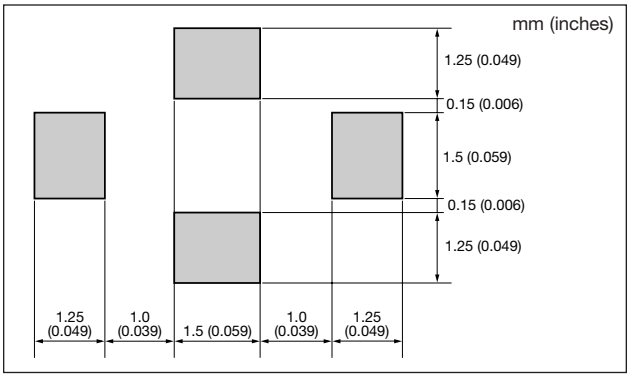

HOW TO ORDER

PARS 315.00 K 00 R

Packaging
R = Tape and reel, 2,000 pcs/reel

Frequency Tolerance or Custom Specs

00	±250kHz	03	±100kHz
01	±200kHz	04	±75kHz
02	±150kHz	10≥	Tolerance
11≤	Custom Specs		

Marking Code

Monthly Code

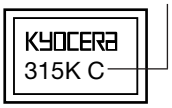

(4 digits Frequency Marking)

Resonant Frequency (MHz)	Marking Code	Resonant Frequency (MHz)	Marking Code
304.45	304 L	423.22	423 K
310.00	310 K	432.92	432 K
314.00	314 K	433.42	433 L
314.50	314 L	433.92	433 K
315.00	315 K	479.50	479 L
320.65	320 K		

Resonant Frequency (MHz)

Series

PACKAGING

mm (inches)

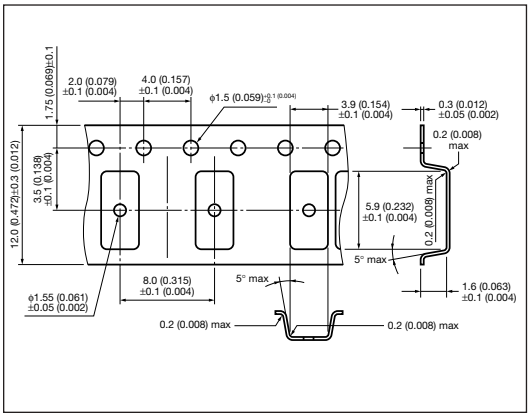

SPECIFICATIONS

Part Number	Resonant Frequency (MHz)	Resonant Loss (dB)	Parallel Capacitance (pF)	Temperature Characteristics (ppm/°C)
PARS303.00N00R	303.000±0.250	2.5 Max.	4.0 Max.	±8 Max.
PARS303.33L00R	303.330±0.250			
PARS303.82M00R	303.825±0.250			
PARS303.87K00R	303.875±0.250			
PARS304.30K00R	304.300±0.250			
PARS304.45L00R	304.450±0.250			
PARS310.00K00R	310.000±0.250			
PARS314.00K00R	314.000±0.250		3.2 Max.	
PARS314.50K00R	314.500±0.250			
PARS315.00K00R	315.000±0.250			
PARS320.65K00R	320.650±0.250			
PARS345.00K00R	345.000±0.250			
PARS418.00K00R	418.000±0.250			
PARS423.22K00R	423.220±0.250			
PARS432.92K00R	432.920±0.250			
PARS433.42L00R	433.420±0.250			
PARS433.92K00R	433.920±0.250			
PARS479.50K00R	479.500±0.500		2.3 Max.	

Please contact your local sales office for custom frequency.

MHz Band Quartz Crystal

KSX-35 Series

FEATURES

- Reference frequency for telecommunication system is in product line up
- Reflow soldering available
- Using Ceramic Package of which reliability is high
- Small, low profile and market standard dimensions

APPLICATIONS

- Mobile phone
- IC Card
- GPS

DIMENSIONS

millimeters (inches)

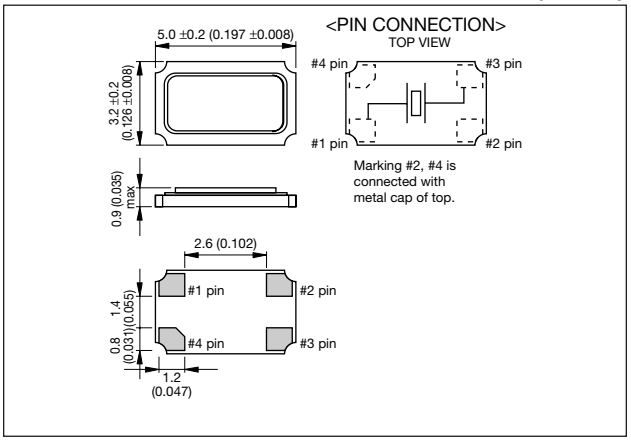

HOW TO ORDER

KSX-35-13000K C A-Q C 0 R

Series

Nominal Frequency

Code	Freq. (MHz)
13000K	13.000000
14400K	14.400000
16800K	16.800000
19200K	19.200000
19440K	19.440000
19680K	19.680000
19800K	19.800000
26000K	26.000000

*Please ask sales if you request other frequency.

Load Capacitance
C = 12pF

Frequency Stability
A = ±10ppm

Frequency Temperature Stability
C = ±15ppm

Operating Temperature
Q = -30°C to +85°C

Frequency Offset
0 = 0Hz (Standard)

Packaging
R = Taping

Packaging Reel

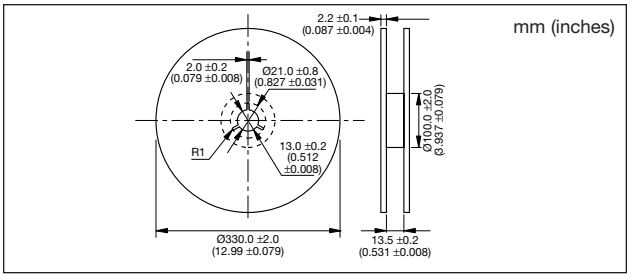

Packaging Tape

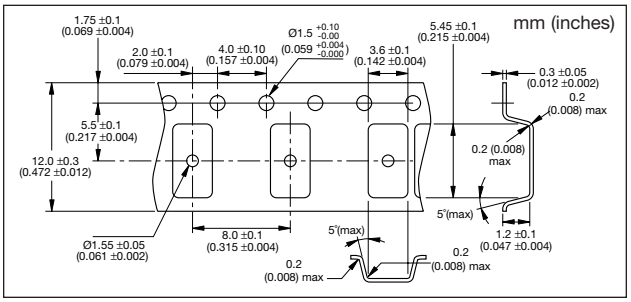

SPECIFICATIONS

Parameters	Symbol	Specification	Remark
Nominal Frequency	f0	13 to 26MHz	—
Mode of Vibration	—	Fundamental	Standard
Load Capacitance	C_L	12.0pF	Standard
Frequency Stability	Δf/f	±10.0ppm	+25°C±2°C
Storage Temp.	T_{STG}	-40°C to +85°C	—
Operating Temp.	T_{OPR}	-30°C to +85°C	for Mobile Phone
Frequency Temp. Stability	Δf/T	±15.0ppm	for Mobile Phone
Series Resistance	C_I	50Ω(max.)	Different by Nominal Frequency

Recommended Land Pattern

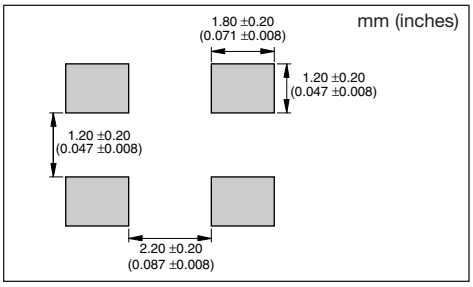

Recommended Reflow Profile

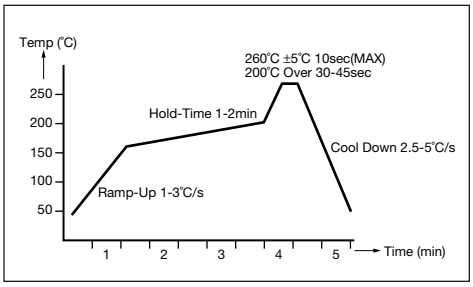

KYOCERA

MHz Band Quartz Crystal

KSX-36 Series

FEATURES

- Reference frequency for telecommunication system is in product line up
- Reflow soldering available
- Using Ceramic Package of which reliability is high
- Small, low profile and market standard dimensions

APPLICATIONS

- Mobile phone
- IC Card
- GPS

DIMENSIONS

millimeters (inches)

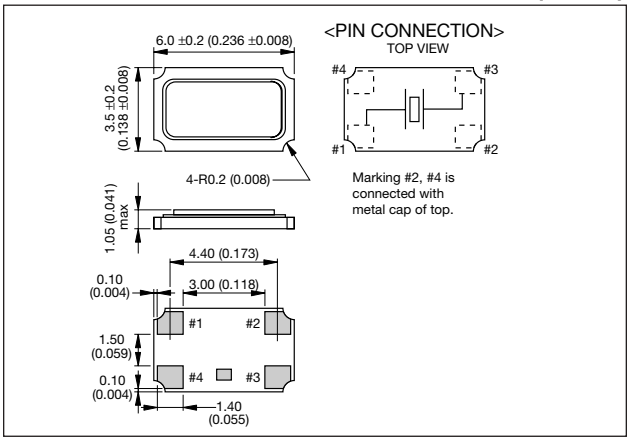

Packaging Reel

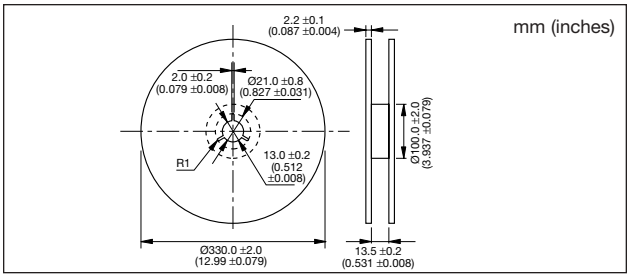

Packaging Tape

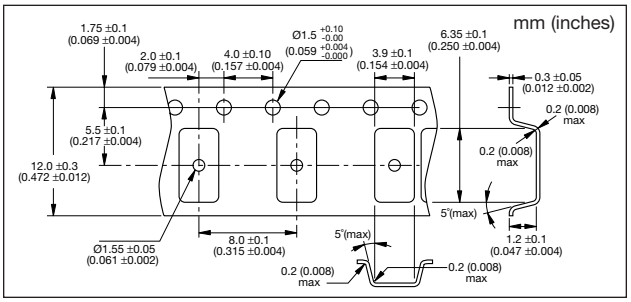

HOW TO ORDER

KSX-36-13000K C A-Q C 0 R

Series

Nominal Frequency

Code	Freq. (MHz)
13000K	13.000000
14400K	14.400000
16800K	16.800000
19200K	19.200000
19440K	19.440000
19680K	19.680000
19800K	19.800000
26000K	26.000000
27820K	27.820800

Packaging
R = Taping

Frequency Offset
0 = 0Hz (Standard)

Frequency Temperature Stability
C = ±15ppm

Operating Temperature
Q = -30°C to +85°C

Frequency Stability
A = ±10ppm

Load Capacitance
C = 12pF

SPECIFICATIONS

Parameters	Symbol	Specification	Remark
Nominal Frequency	f0	13 to 27.8208MHz	—
Mode of Vibration	—	Fundamental	Standard
Load Capacitance	C_L	12.0pF	Standard
Frequency Stability	Δf/f	±10.0ppm	+25°C±2°C
Storage Temp.	T_{STG}	-40°C to +85°C	—
Operating Temp.	T_{OPR}	-30°C to +85°C	for Mobile Phone
Frequency Temp. Stability	Δf/T	±15.0ppm	for Mobile Phone
Series Resistance	C_I	50Ω(max.)	Different by Nominal Frequency

Recommended Land Pattern

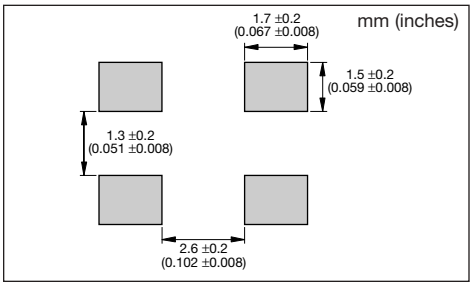

Recommended Reflow Profile

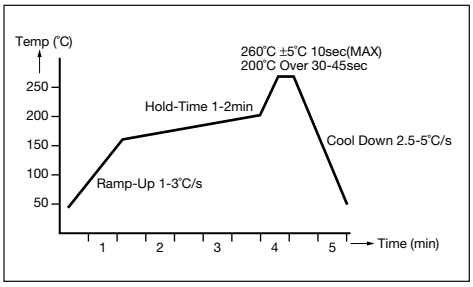

Clock Oscillators

K30/K50 Series

Kyocera has a wide range of clock oscillators with frequency and package size to match the various customer requirements.

K50/K30 HC SERIES TEST CIRCUIT

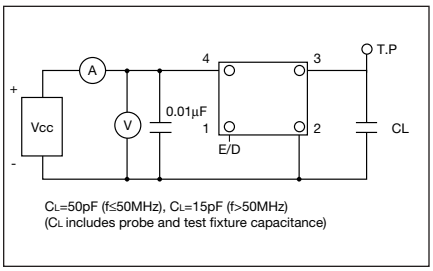

K50/K30 3C SERIES TEST CIRCUIT

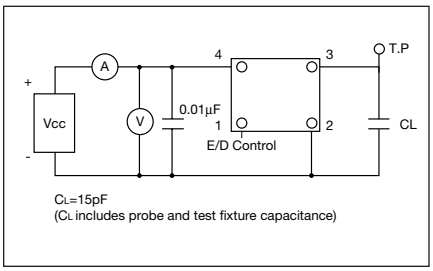

K50H 3C SERIES TEST CIRCUIT

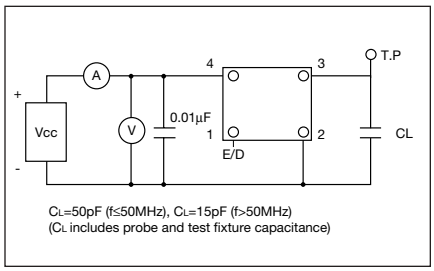

OUTPUT WAVE FORM FOR ALL SERIES

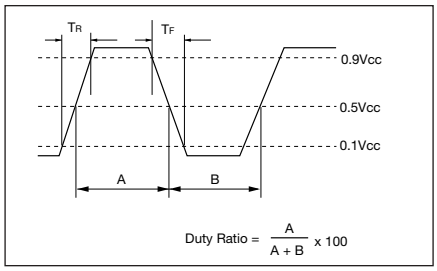

SPECIFICATIONS

Type	Frequency Range (MHz)	Load	Drive Level	Duty Ratio	Features
K50-HC	8 to 68	C_L=50pF (max.) (f_o≤50MHz)	CMOS V_{OH}0.9Vcc V_{OL}0.1Vcc	45/55% (0.5Vcc)	1. IR Reflowable 2. Mini-SMD 3. Tristate Output, Enable/Disable Function F>50MHz C_L=15pF
K50-3C	8 to 80	C_L=15pF (max.)	CMOS V_{OH}0.9Vcc V_{OL}0.1Vcc	40/60% (0.5Vcc)	1. 3.3V Available 2. IR Reflowable 3. Mini-SMD 4. Tristate Output, Enable/Disable Function
K50H-3C	50 to 160	C_L=15pF (max.)	CMOS V_{OH}0.9Vcc V_{OL}0.1Vcc	45/55% (0.5Vcc)	1. 3.3V Available 2. IR Reflowable 3. Mini-SMD 4. Tristate Output, Enable/Disable Function
K30-HC	8 to 50	C_L=50pF (max.) (f_o≤50MHz)	CMOS V_{OH}0.9Vcc V_{OL}0.1Vcc	45/55% (0.5Vcc)	1. IR Reflowable 2. Mini-SMD 3. Tristate Output, Enable/Disable Function
K30-3C	8 to 67	C_L=15pF (max.)	CMOS V_{OH}0.9Vcc V_{OL}0.1Vcc	40/60% (0.5Vcc)	1. 3.3V Available 2. IR Reflowable 3. Mini-SMD 4. Tristate Output, Enable/Disable Function

Clock Oscillators (SMD)

K50-HC Series (5.0V)

K50 SERIES

DIMENSIONS

millimeters (inches)

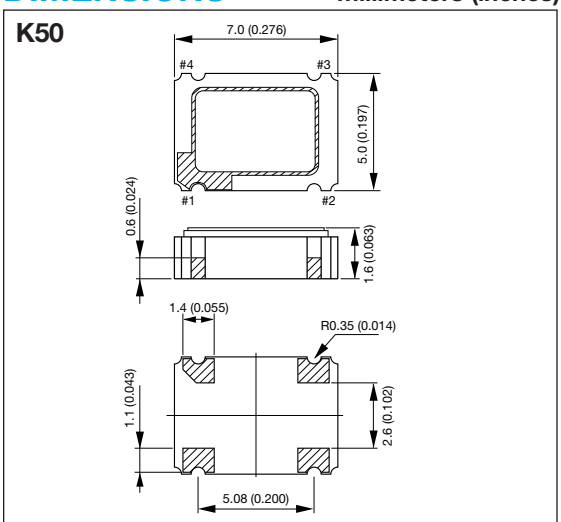

Standard Tol. ±0.2mm (0.008)

PIN CONNECTION

Pin #	Function
1	CONTROL
2	CASE GND
3	OUTPUT
4	+Vcc

ENABLE/DISABLE

Pin #1	Pin #3
"H" or Open	Oscillation
"L"	High Impedance

FEATURES

- High reliable SMD ceramic package
- Frequency range = 8MHz to 68MHz
- Frequency tolerance = ±100ppm, ±50ppm
- Tristate output inhibit

APPLICATIONS

- Routers
- Switches
- Servers

HOW TO ORDER

K50 - HC 1 C S E 40.0000M R

Series

Tolerance
1 = ±100ppm
0 = ±50ppm

Packaging
R = Tape and reel, 1,000 pcs/reel

Frequency (MHz)

8.0000	27.0000	49.1520
14.31818	29.4989	50.0000
16.0000	30.0000	60.0000
20.0000	32.0000	64.0000
24.0000	33.8688	66.6667
24.5760	40.0000	—
25.0000	48.0000	—

Tristate Output
E = with function (STD)

Duty Ratio
S = 45% to 55% (STD)

Output
C = CMOS/Compatibility

SPECIFICATIONS

Items	Code	Rating	Unit	Remarks
Output Frequency	F_{OUT}	8 to 68	MHz	—
Frequency Tolerance	ΔF/F	±100, ±50	ppm	Over all conditions
Aging	ΔF/F	±5	ppm/y	@ 25°C
Operating Temperature	T_{OPR}	-10 to 70	°C	—
Storage Temperature	T_{STR}	-55 to 125	°C	—
Supply Voltage	V_{CC}	5±0.5	V	—
Supply Current	I_{CC}	50 max.	mA	Loaded @ 68MHz
Disable Current	I_{DE}	30 max.	mA	—
Duty Ratio	SYM	45 to 55	%	0.5V_{CC} DC Level
Output 0 Level	V_{OL}	0.1 V_{CC} max.	V	I_{OL} = 16mA
Output 1 Level	V_{OH}	0.9 V_{CC} min.	V	I_{OH} = -16mA
Rise/Fall Time	T_R, T_F	10 max.	nsec	0.1V_{CC}-0.9V_{CC}
Load Capacitance	C_L	50 max.	pF	F>50MHz C_L=15pF (max.)
Enable/Disable Time	—	100 max.	nsec	—
Input Voltage Low	V_{IL}	0.8 max.	V	—
Input Voltage High	V_{IH}	2.2 min.	V	—
Start-up Time	ST	10 max.	mS	Minimum Operating Voltage to be 0sec

*Please contact us for inquiries about Extend Operating Temperature Range (-40 to +85°C), available frequencies, other condition.

Clock Oscillators (SMD)

K50-3C Series (3.3V)

K50 SERIES

DIMENSIONS

millimeters (inches)

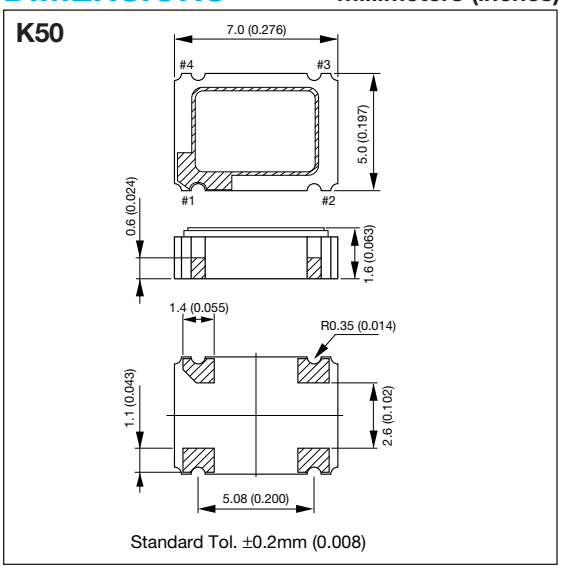

PIN CONNECTION

Pin #	Function
1	CONTROL
2	CASE GND
3	OUTPUT
4	+Vcc

ENABLE/DISABLE

Pin #1	Pin #3
"H" or Open	Oscillation
"L"	High Impedance or Oscillation Stop

FEATURES

- High reliable SMD ceramic package
- Frequency range = 8MHz to 80MHz
- Frequency tolerance = ±100ppm, ±50ppm
- Tristate output inhibit

APPLICATIONS

- PDAs
- Switches
- Routers
- Servers

HOW TO ORDER

K50 - 3C 1 □ E 40.0000M R

Series

Tolerance
1 = ±100ppm
0 = ±50ppm

Packaging
R = Tape and reel, 1,000 pcs/reel

Frequency (MHz)

8.00000	27.0000	49.0000
13.0000	29.4989	49.1520
14.31818	30.0000	50.0000
16.0000	32.0000	53.1250
20.0000	33.8688	64.0000
24.0000	35.3280	66.6667
24.5760	40.0000	80.0000
25.0000	44.0000	—

Enable/Disable Function
E = with function (STD)

Duty Ratio
□ = 40% to 60% (STD)
S = 45% to 55% (f>20MHz)

SPECIFICATIONS

Items	Code	Rating	Unit	Remarks
Output Frequency	F_{OUT}	8 to 80	MHz	—
Frequency Tolerance	ΔF/F	±100, ±50	ppm	Over all conditions
Aging	ΔF/F	±5	ppm/y	@ 25°C
Operating Temperature	T_{OPR}	-10 to 70	°C	—
Storage Temperature	T_{STR}	-55 to 125	°C	—
Supply Voltage	V_{CC}	3.3±0.3	V	—
Supply Current	I_{CC}	25 max.	mA	Loaded @ 80MHz
Disable/Stand by Current	I_{DE}/I_{ST}	10 max.	µA	8≤F≤32MHz
		15 max.	mA	32<F≤50MHz
		10 max.	µA	50<F≤80MHz
Duty Ratio	SYM	40 to 60	%	0.5V_{CC} DC Level
Output 0 Level	V_{OL}	0.1V_{CC} max.	V	I_{OL} = 8mA
Output 1 Level	V_{OH}	0.9V_{CC} min.	V	I_{OH} = -8mA
Rise/Fall Time	T_R, T_F	10 max.	nsec	0.1V_{CC}-0.9V_{CC}
Load Capacitance	C_L	15 max.	pF	—
Enable/Disable Time	—	5 max.	msec	8≤F≤32MHz
		150 max.	nsec	32<F≤50MHz
		5 max.	msec	50<F≤80MHz
Input Voltage Low	V_{IL}	0.3V_{CC} max.	V	—
Input Voltage High	V_{IH}	0.7V_{CC} min.	V	—
Start-up Time	ST	10 max.	mS	Minimum Operating Voltage to be 0sec

*Please contact us for inquiries about Extend Operating Temperature Range (-40 to +85°C), available frequencies, other condition.

Clock Oscillators (SMD)

K50H-3C Series (3.3V)

K50 SERIES

DIMENSIONS

millimeters (inches)

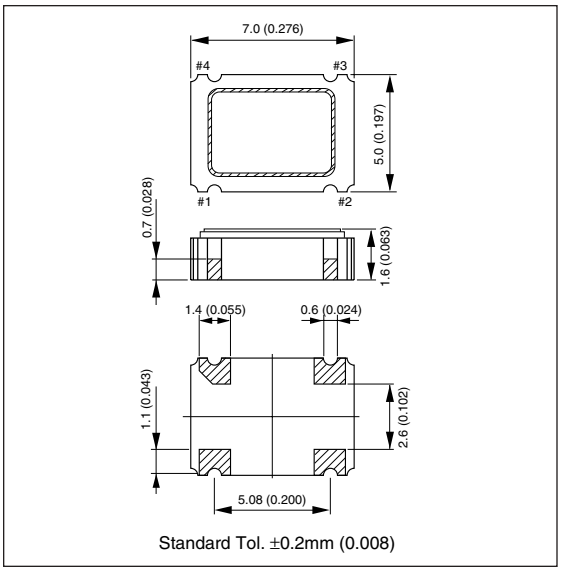

FEATURES

- Special design package for high frequency applications
- Frequency range = 50MHz to 160MHz
- Frequency tolerance = ±100ppm, ±50ppm, ±25ppm
- Tristate output inhibit
- Low jitter

APPLICATIONS

- Fibre channel
- 10 Gigabit Ethernet
- Networking Devices

HOW TO ORDER

K50H - 3C 1 S E 125.000M R

Packaging
R = Tape and reel, 1,000 pcs/reel

Frequency (MHz)

50.0000	100.000	106.250
125.000	133.333	155.520
156.250	—	—

Enable/Disable Function
E = with function (STD)

Duty Ratio
S = 45% to 55% (STD)

Tolerance
1 = ±100ppm
0 = ±50ppm
S = ±30ppm
U = ±25ppm

Series

PIN CONNECTION

Pin #	Function
1	CONTROL
2	CASE GND
3	OUTPUT
4	+V_{CC}

ENABLE/DISABLE

Pin #1	Pin #3
"H" or Open	Oscillation
"L"	High Impedance or Oscillation Stop

SPECIFICATIONS

Items	Code	Rating	Unit	Remarks
Output Frequency	F_{OUT}	50 to 160	MHz	—
Frequency Tolerance	ΔF/F	±100, ±50 ±30, ±25	ppm	Over all conditions
Aging	ΔF/F	±5.0 ±1.5	ppm/y	@ 25°C
Operating Temperature	T_{OPR}	-10 to 70	°C	—
Storage Temperature	T_{STR}	-55 to 125	°C	—
Supply Voltage	V_{CC}	3.3±0.3	V	—
Supply Current	I_{CC}	60 max.	mA	Loaded @ 160MHz
Duty Ratio	SYM	45 to 55	%	0.5V_{CC} DC Level
Output 0 Level	V_{OL}	0.1V_{CC} max.	V	I_{OL} = 8mA
Output 1 Level	V_{OH}	0.9V_{CC} min.	V	I_{OH} = -8mA
Rise/Fall Time	T_R, T_F	10 max.	nsec	0.1V_{CC}-0.9V_{CC}
Load Capacitance	C_L	15 max.	pF	—
Enable Time	—	10 max.	msec	—
Disable Time	—	10 max.	msec	—
Input Voltage Low	V_{IL}	0.3V_{CC} max.	V	—
Input Voltage High	V_{IH}	0.7V_{CC} min.	V	—

*Please contact us for inquiries about Extend Operating Temperature Range (-40 to +85°C), available frequencies, other condition.

RECOMMENDED LAND PATTERN

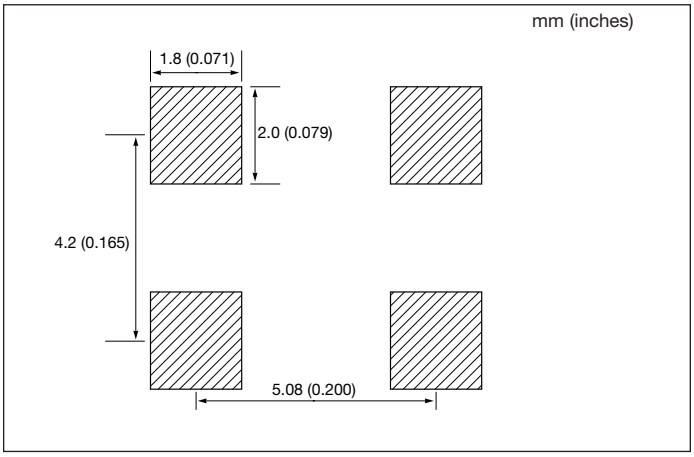

RECOMMENDED REFLOW PROFILE (Lead Free)

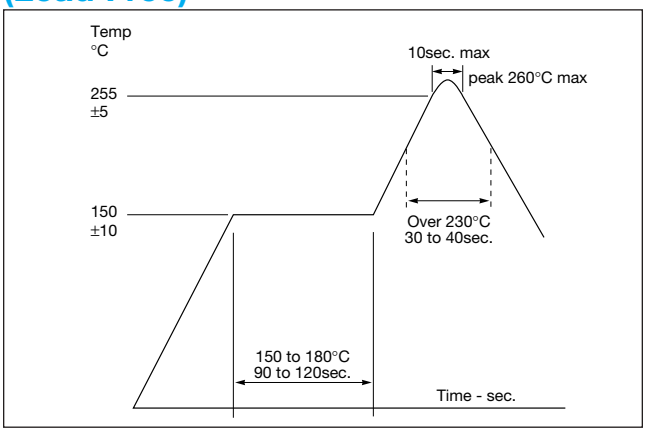

PACKAGING

millimeters (inches)

Reel

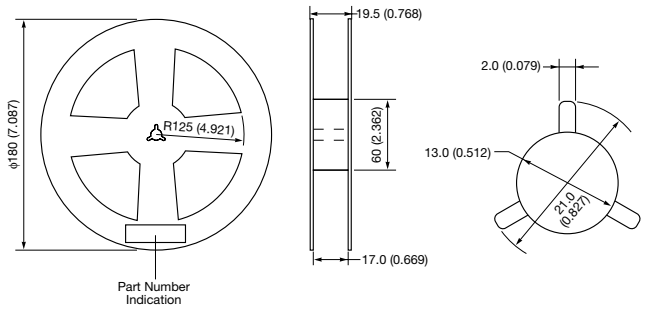

Carrier Tape

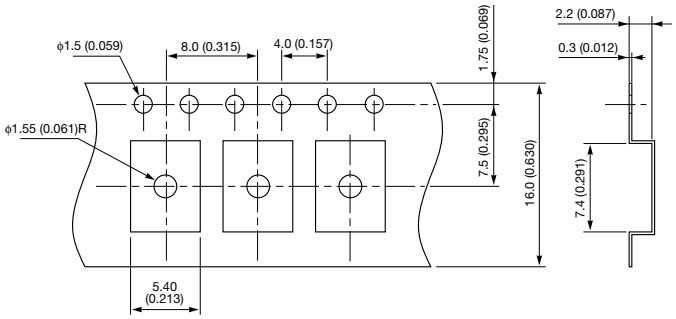

MARKING SPECIFICATIONS

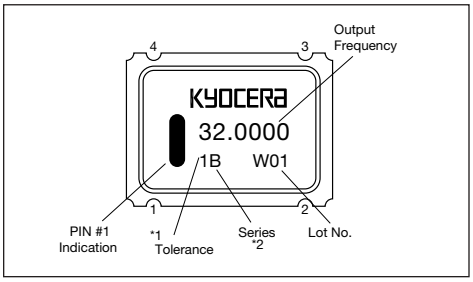

*1 1 = ±100ppm
0 = ± 50ppm
S = ± 30ppm
U = ± 25ppm

*2 B = K50-HC
L = K50-3C-E
M = K50-3C-SE
D = K50-CL
H = K50H-3C-SE

PACKAGING

1,000pcs/Reel

Clock Oscillators (SMD)

K30-HC Series (5.0V)

K30 SERIES

DIMENSIONS

millimeters (inches)

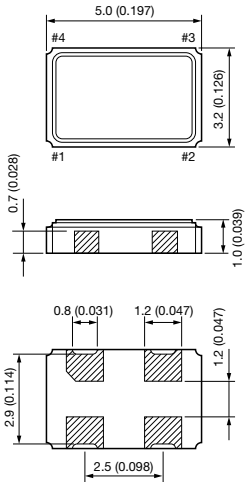

Standard Tol. ±0.2mm (0.008)

PIN CONNECTION

Pin #	Function
1	CONTROL
2	CASE GND
3	OUTPUT
4	+Vcc

ENABLE/DISABLE

Pin #1	Pin #3
"H" or Open	Oscillation
"L"	High Impedance

FEATURES

- High reliable miniature SMD ceramic package
- Frequency range = 8MHz to 50MHz
- Frequency tolerance = ±100ppm, ±50ppm
- Tristate output inhibit

APPLICATIONS

- PDAs
- Portable electronics

HOW TO ORDER

K30 - HC 1 C S E 25.0000M R

Packaging
R = Tape and reel, 1,000 pcs/reel

Frequency (MHz)

14.31818	24.5760	30.0000
16.0000	25.0000	32.0000
17.7345	27.0000	33.8688
20.0000	28.37516	48.0000
24.0000	28.63636	—

Enable/Disable Function
E = with function (STD)

Duty Ratio
S = 45% to 55% (STD)

Output
C = CMOS/Compatibility

Tolerance
1 = ±100ppm
0 = ±50ppm

Series

SPECIFICATIONS

Items	Code	Rating	Unit	Remarks
Output Frequency	F_{OUT}	8 to 50	MHz	—
Frequency Tolerance	ΔF/F	±100, ±50	ppm	Over all conditions
Aging	ΔF/F	±5	ppm/y	@ 25°C
Operating Temperature	T_{OPR}	-10 to 70	°C	—
Storage Temperature	T_{STR}	-55 to 125	°C	—
Supply Voltage	V_{CC}	5±0.5	V	—
Supply Current	I_{CC}	50 max.	mA	Loaded @ 50MHz
Disable Current	I_{DE}	30 max.	mA	—
Duty Ratio	SYM	45 to 55	%	0.5V_{CC} DC Level
Output 0 Level	V_{OL}	0.1V_{CC} max.	V	I_{OL} = 16mA
Output 1 Level	V_{OH}	0.9V_{CC} min.	V	I_{OH} = -16mA
Rise/Fall Time	T_R, T_F	10 max.	nsec	0.1V_{CC}-0.9V_{CC}
Load Capacitance	C_L	50 max.	pF	—
Enable/Disable Time	—	100 max.	nsec	—
Input Voltage Low	V_{IL}	0.8 max.	V	—
Input Voltage High	V_{IH}	2.2 min.	V	—
Start-up Time	ST	10 max.	mS	Minimum Operating Voltage to be 0sec

*Please contact us for inquiries about Extend Operating Temperature Range (-40 to +85°C), available frequencies, other condition.

Clock Oscillators (SMD)

K30-3C Series (3.3V)

K30 SERIES

DIMENSIONS

millimeters (inches)

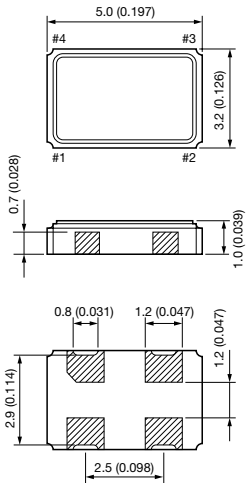

Standard Tol. ±0.2mm (0.008)

FEATURES

- High reliable miniature SMD ceramic package
- Frequency range = 8MHz to 67MHz
- Frequency tolerance = ±100ppm, ±50ppm
- Tristate output inhibit
- Low current consumption

APPLICATIONS

- PDAs
- Notebook PC
- Portable electronics

HOW TO ORDER

K30 - 3C 1 □ E 40.0000M R

Packaging
R = Tape and reel, 1,000 pcs/reel

Frequency (MHz)

13.0000	24.5760	30.0000
14.31818	25.0000	32.0000
16.0000	27.0000	44.0000
17.7345	28.37516	48.0000
20.0000	28.63636	66.6667
24.0000	29.4989	—

Enable/Disable Function
E = with function (STD)

Duty Ratio
□ = 40% to 60% (STD)
S = 45% to 55% (f>20MHz)

Tolerance
1 = ±100ppm
0 = ±50ppm

Series

PIN CONNECTION

Pin #	Function
1	CONTROL
2	CASE GND
3	OUTPUT
4	+Vcc

ENABLE/DISABLE

Pin #1	Pin #3
"H" or Open	Oscillation
"L"	High Impedance or Oscillation Stop

SPECIFICATIONS

Items	Code	Rating	Unit	Remarks
Output Frequency	F_{OUT}	8 to 67	MHz	—
Frequency Tolerance	ΔF/F	±100, ±50	ppm	Over all Conditions
Aging	ΔF/F	±5	ppm/y	@ 25°C
Operating Temperature	T_{OPR}	-10 to 70	°C	—
Storage Temperature	T_{STR}	-55 to 125	°C	—
Supply Voltage	V_{CC}	3.3±0.3	V	—
Supply Current	I_{CC}	25 max.	mA	Loaded @ 67 MHz
Stand by Current	I_{ST}	10 max.	µA	—
Duty Ratio	SYM	40 to 60, 45 to 55	%	0.5V_{CC} DC Level
Output 0 Level	V_{OL}	0.1V_{CC} max.	V	I_{OL} = 8mA
Output 1 Level	V_{OH}	0.9V_{CC} min.	V	I_{OH} = -8mA
Rise/Fall Time	T_R, T_F	10 max.	nsec	0.1V_{CC}-0.9V_{CC}
Load Capacitance	C_L	15 max.	pF	—
Enable/Disable Time	—	5 max.	msec	—
Input Voltage Low	V_{IL}	0.3V_{CC} max.	V	—
Input Voltage High	V_{IH}	0.7V_{CC} min.	V	—
Start-up Time	ST	10 max.	mS	Minimum Operating Voltage to be 0sec

Clock Oscillators (SMD)

K30-3C Tight Tolerance Series (3.3V)

K30 SERIES

DIMENSIONS

millimeters (inches)

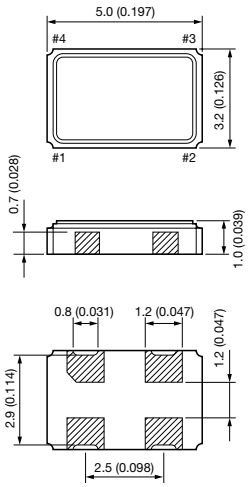

Standard Tol. ±0.2mm (0.008)

FEATURES

- High reliable miniature SMD ceramic package
- Excellent frequency precision
- Tristate output inhibit
- Low current consumption

APPLICATIONS

- IEEE 802.11
- Wireless LAN

HOW TO ORDER

K30 - 3C U □ E 44.0000M R

Packaging
R = Tape and reel, 1,000 pcs/reel

Frequency (MHz)

13.0000	28.37516	44.0000
26.0000	28.63636	—
27.0000	32.0000	—

Enable/Disable Function
E = with function (STD)

Duty Ratio
□ = 40% to 60% (STD)
S = 45% to 55% (f>20MHz)

Tolerance
U = ±25ppm

Series

PIN CONNECTION

Pin #	Function
1	CONTROL
2	CASE GND
3	OUTPUT
4	+Vcc

ENABLE/DISABLE

Pin #1	Pin #3
"H" or Open	Oscillation
"L"	High Impedance or Oscillation Stop

SPECIFICATIONS

Items	Code	Rating	Unit	Remarks
Output Frequency	F_{OUT}	8 to 67	MHz	—
Frequency Tolerance	ΔF/F	±25	ppm	Over all conditions
Aging	ΔF/F	±3	ppm/y	@ 25°C
Operating Temperature	T_{OPR}	-10 to 70	°C	—
Storage Temperature	T_{STR}	-55 to 125	°C	—
Supply Voltage	V_{CC}	3.3±0.16	V	—
Supply Current	I_{CC}	25 max.	mA	Loaded @ 67 MHz
Stand by Current	I_{ST}	10 max.	µA	—
Duty Ratio	SYM	40 to 60, 45 to 55	%	0.5V_{CC} DC Level
Output 0 Level	V_{OL}	0.1V_{CC} max.	V	I_{OL} = 8mA
Output 1 Level	V_{OH}	0.9V_{CC} min.	V	I_{OH} = -8mA
Rise/Fall Time	T_R, T_F	10 max.	nsec	0.1V_{CC}-0.9V_{CC}
Load Capacitance	C_L	15 max.	pF	—
Enable/Disable Time	—	5 max.	msec	—
Input Voltage Low	V_{IL}	0.3V_{CC} max.	V	—
Input Voltage High	V_{IH}	0.7V_{CC} min.	V	—
Start-up Time	ST	10 max.	mS	Minimum Operating Voltage to be 0sec

*Please contact us for inquires about Supply Voltage, other condition.

RECOMMENDED LAND PATTERN

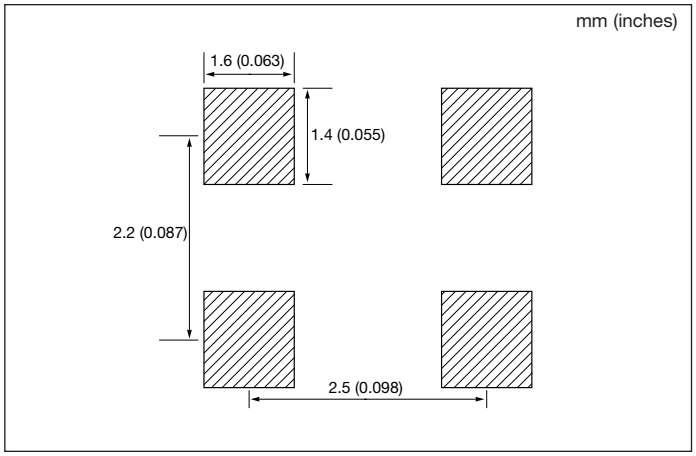

RECOMMENDED REFLOW PROFILE (Lead Free)

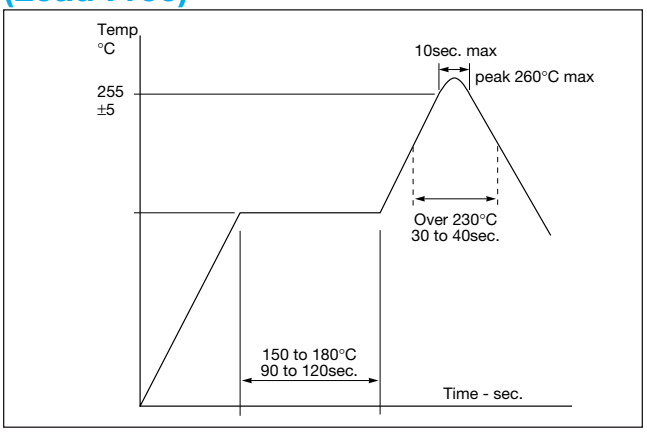

PACKAGING

millimeters (inches)

Reel

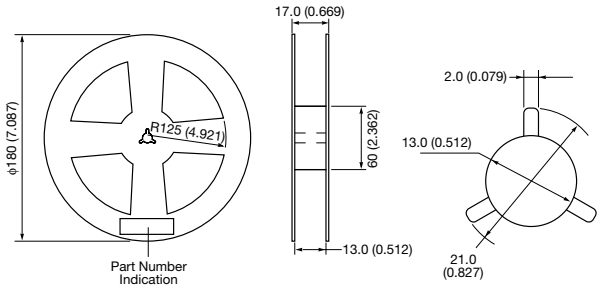

Carrier Tape

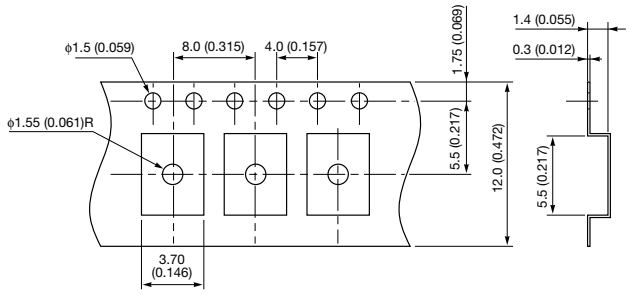

MARKING SPECIFICATIONS

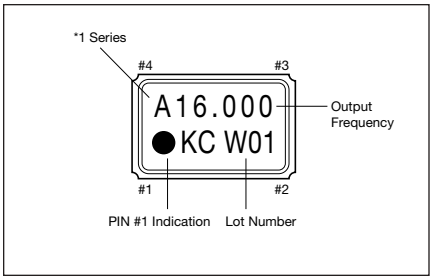

*1 A = K30-HC1-CSE
B = K30-HCO-CSE
L = K30-3C1-E
M = K30-3C0-E
P = K30-3C1-SE
R = K30-3C0-SE
V = K30-3CU-E
W = K30-3CU-SE

PACKAGING

1,000 pcs/Reel

Voltage Controlled Oscillators

YKS1 Series

FEATURES

- Small and low profile
- Frequency 700MHz to 2.5GHz available
- Application for UMTS, AMPS(CDMA), PCS, PDC, PHS

HOW TO ORDER

YK S1 M N A 0991 □

- **Custom Specification**
- **Frequency (MHz)**
- **Combination of Control Voltage and Band Selector Terminals**
  A = Normal
- **Oscillating Mode**
  N = Normal
- **Output**
  M = 1
- **Type**
  S1 = 5.5x4.8mm
- **Series**

DIMENSIONS

millimeters (inches)

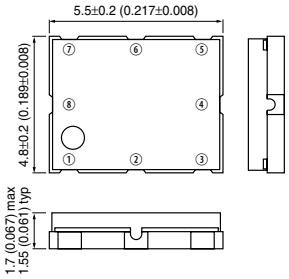

Pin Configuration	
①	Vc = Control Voltage
②	GND
③	Vcc = Supply Voltage
④	GND
⑤	RF-out
⑥	GND
⑦	GND
⑧	GND

SPECIFICATIONS

Part Number	System	Function	Frequency MHz	Vcc (V)	Icc (mA)	Po (dBm)	f_{TU} (MHz/V)	C/N (dBC/Hz)
YKS1MNA0991*	AMPS(CDMA)	RF	978 to 1004	2.45±0.10	≤8.0	-1.5±3	27±4	≥117@60kHz ≥140@900kHz
YKS1MNA2070*	PCS	RF	2039 to 2100	2.45±0.10	≤9.5	-1.5±3	60±10	≥137@1.25MHz
YKS1MNA1668*	PHS	RF	1649.5 to 1686.5	2.80±0.40	≤6.0	≥-7	45±7	≥125@600kHz

Vcc: Power supply Icc: Current consumption Po: Output level fru: Tuning voltage sensitivity Top: Operating temperature range

RECOMMENDED LAND PATTERN

mm (inches)

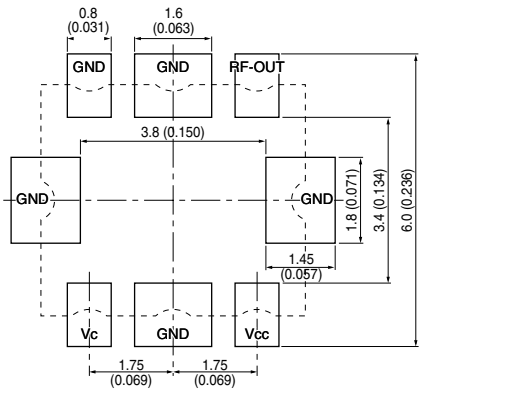

RECOMMENDED REFLOW PROFILE

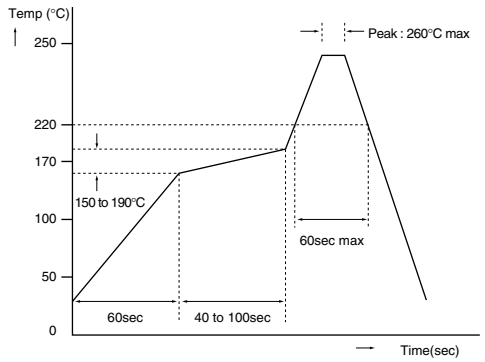

Voltage Controlled Oscillators

YK509 Series

FEATURES

- For Dualband Offset Solution
- Dual high power signal output
- Small Size (8.7x6.7mm)

HOW TO ORDER

YK 509 M D B 1390M2139 A

Custom Specification

Frequency (MHz)
Frequency Band 1
Frequency Band 2

Combination of Control Voltage and Band Selector and Power Save Terminals

	Vc	Band Select	Power Save		Vc	Band Select	Power Save
A	1	0	–	E	2	2	–
B	1	1	–	F	1	1	Low/Active
C	1	2	–	G	1	1	High/Active
D	2	1	–	H	1	2	High/Active

Oscillating Mode
S = Shift W = Doubler
N = Normal D = 2 Resonator

Output
M = 1 D = 2

Type
509 = 8.7x6.7mm

Series

DIMENSIONS

millimeters (inches)

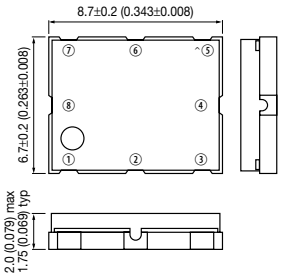

Pin Configuration	
①	Vc = Control Voltage
②	GND
③	Vcc = Supply Voltage
④	RF-out
⑤	GND
⑥	Vs = Voltage Band Select
⑦	GND
⑧	GND

SPECIFICATIONS

Part Number	System	Function	Frequency MHz	Vcc (V)	Icc (mA)	Po (dBm)	f_{TU} (MHz/V)	C/N (dBC/Hz)
YK509MDB1390M2139*	GPS	RF	1385 to 1396	2.80±0.10	≤15	0 typ	14±3	≥90@10kHz ≥139@1.25MHz
	AMPS/PCS	RF	2104 to 2174	2.80±0.10	≤15	0 typ	50±10	≥112@60kHz ≥118@120kHz

RECOMMENDED LAND PATTERN

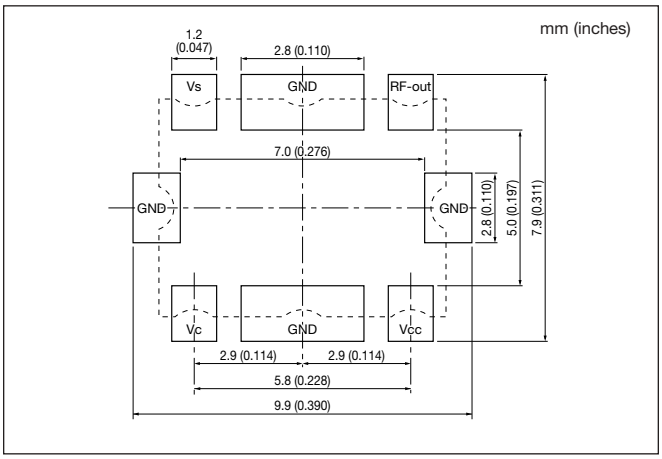

RECOMMENDED REFLOW PROFILE

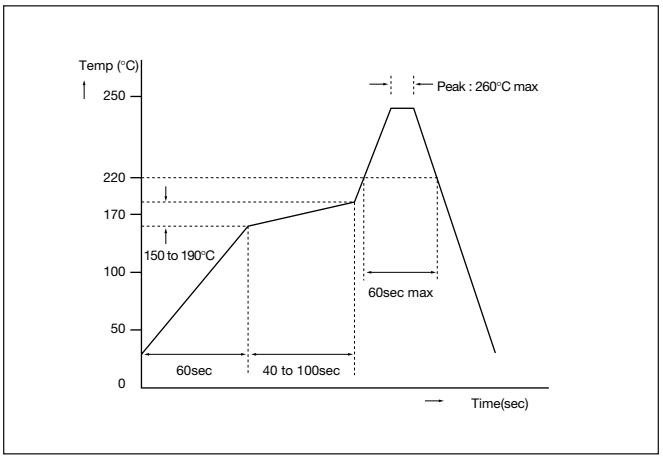

Voltage Controlled Oscillators

YK511 Series

FEATURES

- Small and low profile
- Frequency 700MHz to 2GHz available
- Application for PDC CDMA

HOW TO ORDER

YK 511 M N A 0724 □

- **Custom Specification**
- **Frequency (MHz)**
- **Combination of Tuning and Selector Terminals**
  A = Normal
- **Oscillating Mode**
  N = Normal
- **Output**
  M = 1
- **Type**
  511 = 5.0x4.0mm
- **Series**

DIMENSIONS

millimeters (inches)

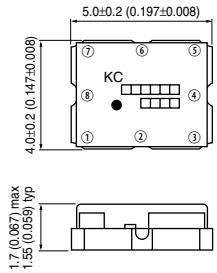

Pin Configuration	
①	Vc = Control Voltage
②	GND
③	Vcc = Supply Voltage
④	GND
⑤	RF-out
⑥	GND
⑦	N.C.
⑧	GND

SPECIFICATIONS

Part Number	System	Function	Frequency MHz	Vcc (V)	Icc (mA)	Po (dBm)	f_{TU} (MHz/V)	C/N (dBC/Hz)
YK511MNA0724*	PDC800	RF	680 to 766.4	2.80±0.10	≤4.0	≥-8	61±9	≥104@25kHz
YK511MNA0741*	CDMA-ONE	RF	721.5 to 760.5	2.70±0.10	≤6.0	≥-4	34±4	≥107@25kHz ≥119@100kHz
YK511MNA0760*	W-CDMA	IF	760	2.70±0.10	≤5.0	-7±3	19.5±3	≥118@200kHz ≥142@5.0MHz
YK511MNA2330*	W-CDMA	RF	2270 to 2390	2.70±0.10	≤8.0	≥-5	82±12	≥109@200kHz ≥136@5.0MHz

Vcc: Power supply Icc: Current consumption Po: Output level fru: Tuning voltage sensitivity Top: Operating temperature range

RECOMMENDED LAND PATTERN

mm (inches)

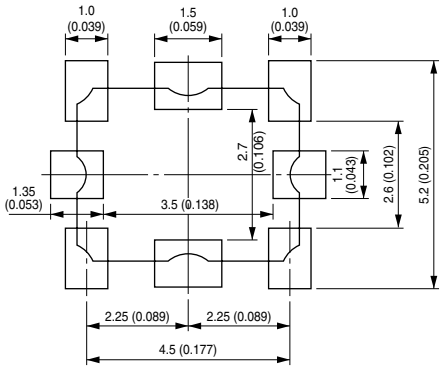

RECOMMENDED REFLOW PROFILE

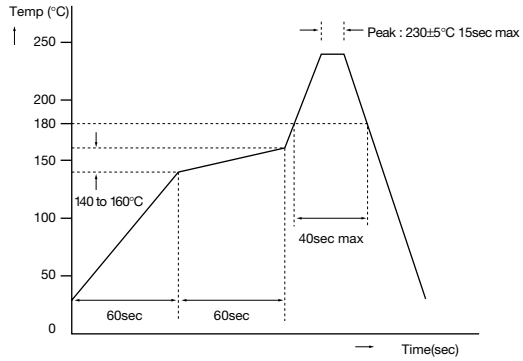

Voltage Controlled Oscillators

YK512 Series

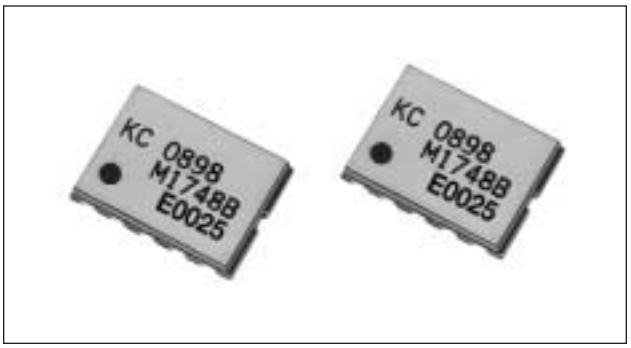

FEATURES

- Small and low profile (1.7mm max.)
- Dual high power signal output
- For Dualband Offset Solution

HOW TO ORDER

YK 512 D D C 0898M1748 A

- **Custom Specification**
- **Frequency (MHz)**
  Frequency Band 1
  Frequency Band 2
- **Combination of Control Voltage and Band Selector and Power Save Terminals**

	Vc	Band Select	Power Save		Vc	Band Select	Power Save
A	1	0	–	E	2	2	–
B	1	1	–	F	1	1	Low/Active
C	1	2	–	G	1	1	High/Active
D	2	1	–	H	1	2	High/Active

- **Oscillating Mode**
  S = Shift W = Doubler
  N = Normal D = 2 Resonator
- **Output**
  M = 1 D = 2
- **Type**
  512 = 9.6x7.0mm
- **Series**

DIMENSIONS

millimeters (inches)

YK512 DD

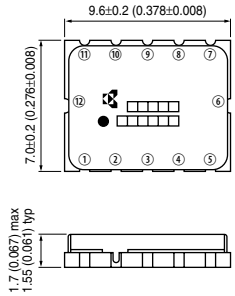

Pin Configuration		
P/N	DDC	DDF
①	Vcc2	GND
②	GND	GND
③	Vc	Vc
④	GND	Ps
⑤	Vcc1	Vcc
⑥	GND	GND
⑦	OUT1	OUT1
⑧	Vs1	Vs
⑨	GND	GND
⑩	Vs2	GND
⑪	OUT	OUT2
⑫	GND	GND

Vcc = Supply Voltage
Vc = Control Voltage
Vs = Band Select
Ps = Power Save

SPECIFICATIONS

Part Number	System	Function	Frequency MHz	Vcc (V)	Icc (mA)	Po (dBm)	f_{TU} (MHz/V)	C/N (dBC/Hz)
YK512DDC0898M1748*	GSM	Tx	880 to 915	2.75±0.10	≤27	9.5 typ	52±8	≥117@100kHz ≥164@ 20MHz
	DCS	Tx	1710 to 1785	2.75±0.10	≤35	9.5 typ	90±12	≥110@100kHz ≥156@ 20MHz
YK512DDF0898M1748*	GSM	Tx	880 to 915	2.80±0.10	≤30	9.0 typ	33±5	≥120@100kHz ≥162@ 20MHz
	DCS	Tx	1710 to 1785	2.80±0.10	≤30	9.0 typ	66±10	≥110@100kHz ≥154@ 20MHz

RECOMMENDED LAND PATTERN

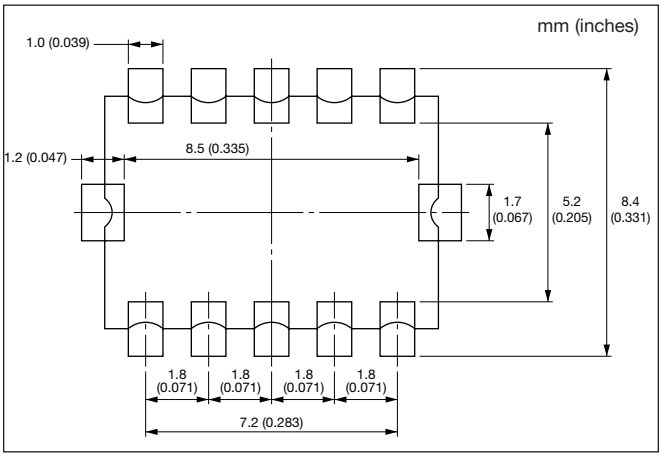

RECOMMENDED REFLOW PROFILE

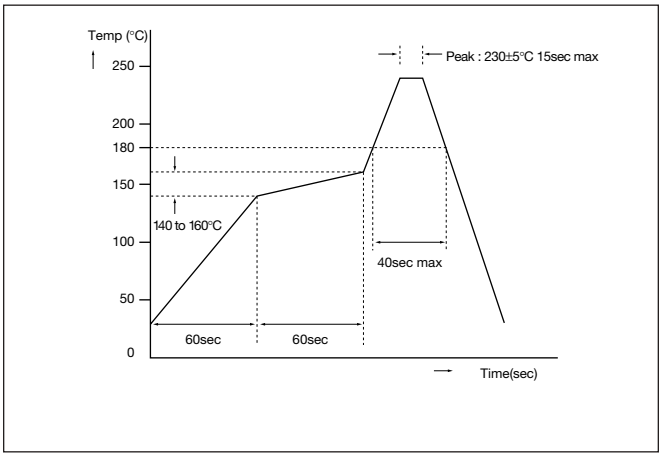

PACKAGING

Reel

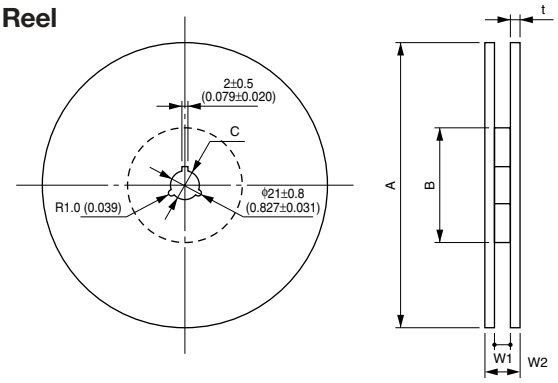

Dimensions

mm (inches)

	A	B	C	W1	W2
YK511	ø330 (ø13.00)	ø100 (ø3.937)	13.0 (0.512)	13.5 (0.531)	18.5 (0.728)
YKS1					
YK509				17.5 (0.689)	22.4 (0.882)
YK512					

Tape

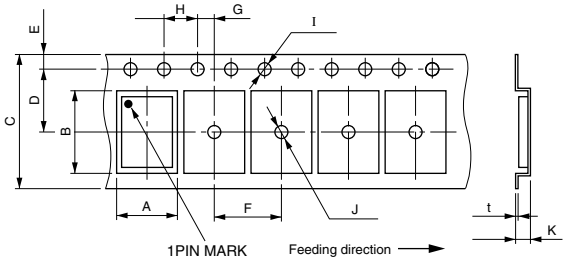

Dimensions

mm (inches)

	A	B	C	D	E	F	G	H	I	J	K	t
YK511	4.40 (0.173)	5.40 (0.213)	12.0 (0.472)	5.50 (0.217)	1.75 (0.069)	8.00 (0.315)	2.00 (0.079)	4.00 (0.157)	ø1.55 (ø0.061)	ø1.55 (ø0.061)	1.80 (0.071)	0.30 (0.012)
YKS1	5.30 (0.209)	6.00 (0.236)										
YK509	7.30 (0.287)	9.30 (0.366)	16.0 (0.630)	7.50 (0.295)		12.0 (0.472)					2.20 (0.087)	
YK512	7.25 (0.285)	9.85 (0.388)									1.80 (0.071)	

PACKAGING

Part Number	Packaging Quantity (pcs/reel)
YK511	3,000
YKS1	
YK509	2,000
YK512	

Temperature Compensated Crystal Oscillators KT14 Series

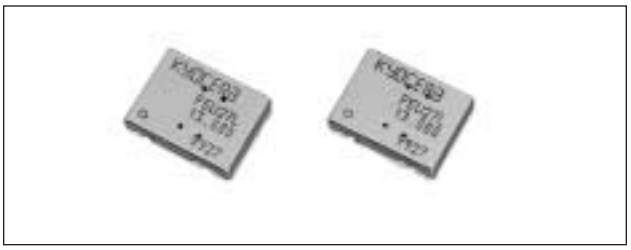

FEATURES

- Low profile SMD type (9.0x7.0x1.7mm)
- Frequency adjustment free after reflow soldering process
- AFC function available
- 2.8, 3.0, 3.3V drive available

APPLICATIONS

- PHS, PDC, GSM, DCS1800, AMPS, CDMA, D-AMPS, PCS1900, etc.

DIMENSIONS

millimeters (inches)

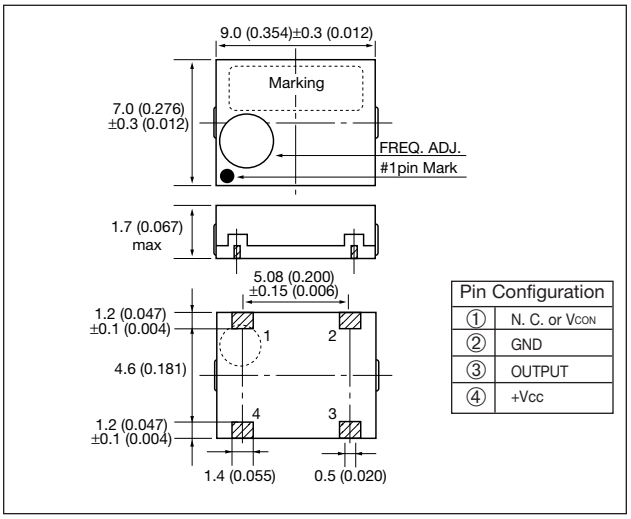

Pin Configuration	
①	N. C. or Vcon
②	GND
③	OUTPUT
④	+Vcc

HOW TO ORDER

KT14 - E G R 28 N - 19.200M T

Packaging
T = Tape and reel 2,000 pcs/reel

Frequency (MHz)

12.8000	14.850	19.440
13.000	16.800	19.680
14.400	19.200	19.800

AFC Function
N = No, L = Yes (Trimmerless)

Supply Voltage
28 = 2.8V, 30 = 3.0V

Upper Operating Temp.
V = 80°C, T = 70°C, R = 60°C

Lower Operating Temp.
C = -30°C, G = -10°C, E = -20°C

Frequency Stability
K = ±5ppm, E = ±2.5ppm, D = ±2.0ppm

Series

TEST CIRCUIT

Test Circuit 1 (Amplitude)

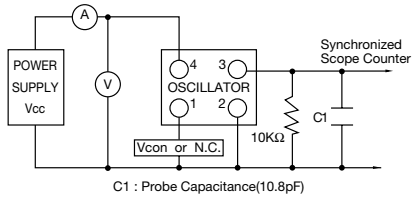

Test Circuit 2 (Harmonics and Frequency)

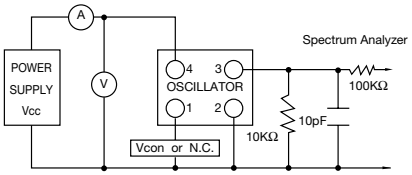

SPECIFICATIONS

Items	Code	Specifications: PHS	Specifications: Cellular	Unit	Remarks
Supply Voltage	Vcc	2.8±5%	2.8±5%	V	—
			3.0±5%		
			3.3±5%		
Output Frequency	fo	19.200	12.800 13.000 14.000	MHz	—
			14.850 16.800		
			19.200 19.440		
			19.680 19.800		
Operating Temperature	Topr	-10 to 60	-30 to +80	°C	—
Storage Temperature	Tstr	-20 to 70	-40 to 85	°C	—
Frequency Stability	Δf/fo	±2.5 max.	±2.0 max.	ppm	vs temperature (after reflow)
			±2.5 max.		
		±0.2 max.		ppm	vs load
		±0.3 max.		ppm	vs voltage
Aging Rate	Aging	±1.0 max.		ppm/year	1 year
Output Voltage	Vout	0.8 min.		Vp-p	load 10kΩ/10pF
Supply Current	Icc	2.0 max.		mA	no load
Trimmer Control Range	Δf/C	±3.0 min.	—	ppm	—
Voltage Control Range	Δf/V	—	ex: ±4.0 to ±8.0	ppm	1.5V±1V, 2.5V±1V
Harmonics	—	-3.0 max.		dBc	—

Temperature Compensated Crystal Oscillators KT16 Series

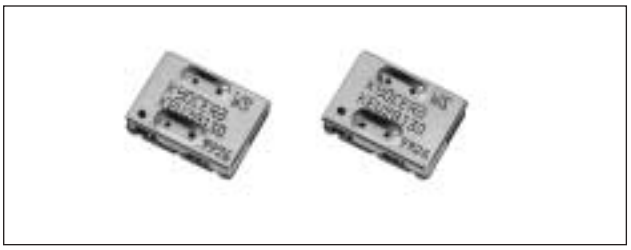

FEATURES

- Miniature SMD type (7.0x5.2.0x1.8mm)
- Frequency adjustment free after reflow soldering process
- AFC function available
- 2.7V, 3.0V, 3.3V drive available
- Frequency Stability = ±2ppm at 30 to +80°C

APPLICATIONS

- PDC, GSM, CDMA, TDMA

DIMENSIONS

millimeters (inches)

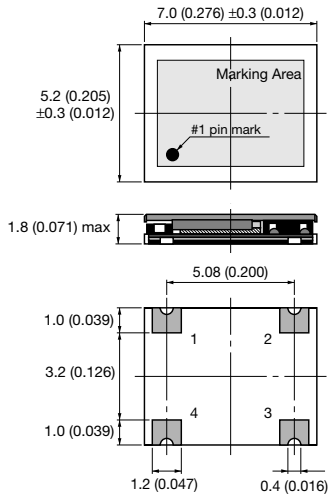

Pin Configuration	
①	VCON
②	GND/CASE GND
③	OUTPUT
④	+Vcc

HOW TO ORDER

KT16 - D C V 30 L - 19.680M T

Packaging
T = Tape and reel 4,000 pcs/reel

Frequency (MHz)

12.800	14.850	19.440
13.000	16.800	19.680
14.400	19.200	19.800

AFC Function
L = Yes

Supply Voltage
28 = 2.8V, 30 = 3.0V

Upper Operating Temp.
V = 80°C, T = 70°C, R = 60°C

Lower Operating Temp.
C = -30°C, G = -10°C, E = -20°C

Frequency Stability
K = ±5ppm, E = ±2.5ppm, D = ±2.0ppm

Series

TEST CIRCUIT

Test Circuit 1 (Amplitude)

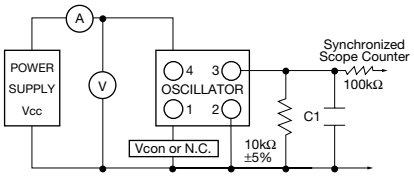

Test Circuit 2 (Harmonics and Frequency)

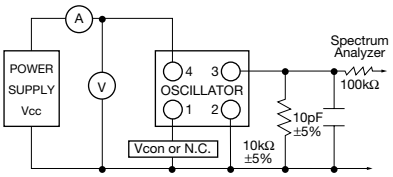

SPECIFICATIONS

Items	Code	Specifications Cellular		Unit	Remarks
Supply Voltage	Vcc	2.7		V	—
		3.0			
		3.3			
Output Frequency	fo	26.000	19.440	MHz	—
		19.680	14.400		
		13.000	12.800		
Operating Temperature	Topr	-30 to +80		°C	—
Storage Temperature	Tstg	-40 to +85		°C	—
Frequency Stability	Δf/fo	±2.0 max.		ppm	vs temperature (after reflow)
		±2.5 max.			
		±0.2 max.		ppm	vs load
		±0.3 max.		ppm	vs voltage
Aging Rate	Aging	±1.0 max.		ppm/year	25°C±2°C
Output Voltage	Vout	0.8 min.		Vp-p	load 10kΩ/10pF
Supply Current	Icc	1.5 max.		mA	—
Trimmer Control Range	Δf/C	—		ppm	—
Voltage Control Range	Δf/V	±8.0 to ±15		ppm	—
Harmonics	—	-3.0 max.		dBc	—

Temperature Compensated Crystal Oscillators KT18 Series

FEATURES

- Miniature SMD type (5.0x3.2x1.5mm)
- Frequency adjustment free after reflow soldering process
- AFC function available
- 2.6 to 5.5V drive available
- Frequency Stability = ±2ppm at 30 to +80°C

APPLICATIONS

- PDC, GSM, CDMA, TDMA

DIMENSIONS

millimeters (inches)

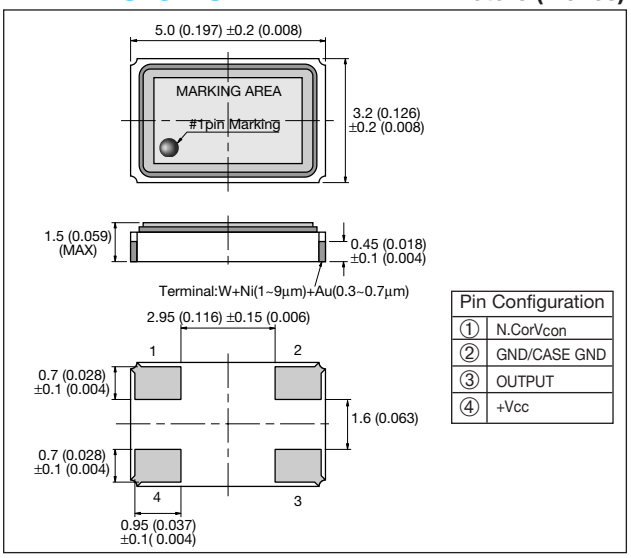

Pin Configuration	
①	N.CorVcon
②	GND/CASE GND
③	OUTPUT
④	+Vcc

HOW TO ORDER

KT18 - D C V 30 A - 19.680M T

Packaging
T = Tape and reel 4,000 pcs/reel

Frequency (MHz)

12.800	16.800	19.680
13.000	19.200	19.800
14.400	19.440	26.000

AFC Function
A = Yes

Supply Voltage
28 = 2.8V, 30 = 3.0V

Upper Operating Temp.
V = 80°C, T = 70°C, R = 60°C

Lower Operating Temp.
C = -30°C, G = -10°C, E = -20°C

Frequency Stability
K = ±5ppm, E = ±2.5ppm, D = ±2.0ppm

Series

TEST CIRCUIT

Test Circuit 1 (Amplitude)

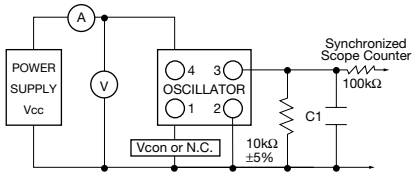

Test Circuit 2 (Harmonics and Frequency)

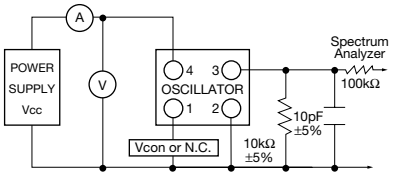

SPECIFICATIONS

Items	Code	Specifications Cellular			Unit	Remarks
Supply Voltage	Vcc	2.6 to 5.5			V	—
Output Frequency	fo	26.000	19.440	19.200	MHz	—
		19.680	14.400	19.800		
		13.000	12.800	16.800		
Operating Temperature	Topr	-30 to +80			°C	—
Storage Temperature	Tstg	-40 to +85			°C	—
Frequency Stability	Δf/fo	±1.5 max.			ppm	vs temperature (after reflow)
		±2.0 max.				
		±0.2 max.			ppm	vs load
		±0.3 max.			ppm	vs voltage
Aging Rate	Aging	±1.0 max.			ppm/year	25°C±2°C
Output Voltage	Vout	0.8 min.			Vp-p	load 10kΩ/10pF
Supply Current	Icc	2.0 max.			mA	—
Trimmer Control Range	Δf/C	—			ppm	—
Voltage Control Range	Δf/V	±8.0 to ±15			ppm	—
Harmonics	—	-3.0 max.			dBc	—

Temperature Compensated Crystal Oscillators

RECOMMENDED LAND PATTERN

mm (inches)

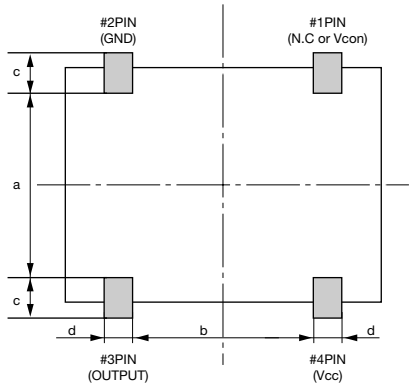

	A	B	C	D
KT14	4.60 (0.181)	3.68 (0.145)	1.60 (0.063)	1.40 (0.055)
KT16	3.20 (0.126)	3.88 (0.153)	1.30 (0.051)	1.20 (0.047)
KT18	1.60 (0.063)	2.95 (0.116)	0.70 (0.028)	0.95 (0.037)

REEL DIMENSIONS

millimeters (inches)

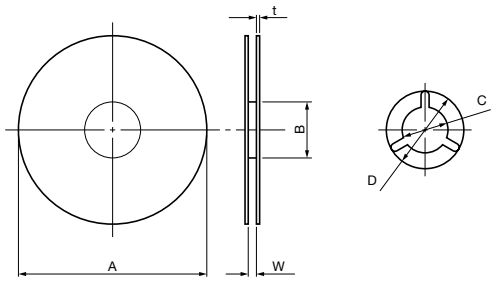

	A	B	C	D	W	t
KT14	ø330 (ø13.00)	ø100 (ø3.937)	ø13 (ø0.512)	ø21 (ø0.827)	17.5 (0.689)	2.0 (0.079)
KT16		ø80 (ø3.150)				
KT18		ø100 (ø3.937)			13.5 (0.531)	2.20 (0.087)

PACKAGING

millimeters (inches)

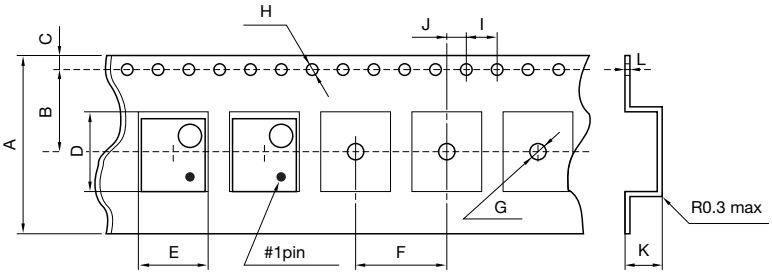

Feeding direction →

	A	B	C	D	E	F	G	H	I	J	K	L
KT14	16.0 (0.630)	7.50 (0.295)	1.75 (0.069)	7.80 (0.307)	7.90 (0.311)	12.0 (0.472)	ø1.55 (ø0.061)	ø1.50 (ø0.059)	4.00 (0.157)	2.00 (0.061)	0.30 (0.012)	1.80 (0.071)
KT16				7.65 (0.301)	5.75 (0.226)	8.00 (0.315)	ø2.00 (0.079)					2.00 (0.061)
KT18	12.0 (0.472)	5.50 (0.217)		5.50 (0.217)	3.70 (0.146)	8.00 (0.315)	ø1.50 (ø0.059)					1.60 (0.063)

RECOMMENDED REFLOW PROFILE

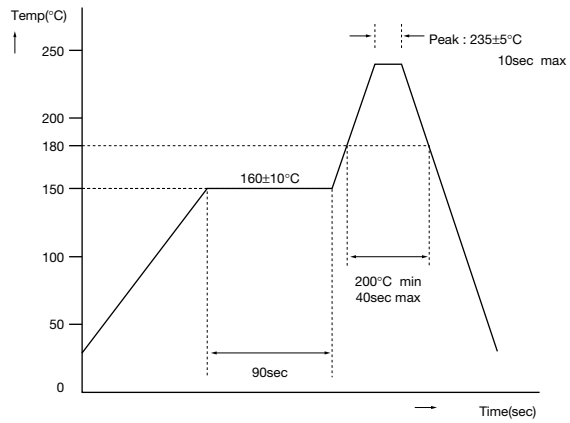

PACKAGING

KT14: 2,000 pcs/reel
KT16/KT18: 4,000 pcs/reel

KHz Band Ceramic IF Filters

KBF-RL, PL Series

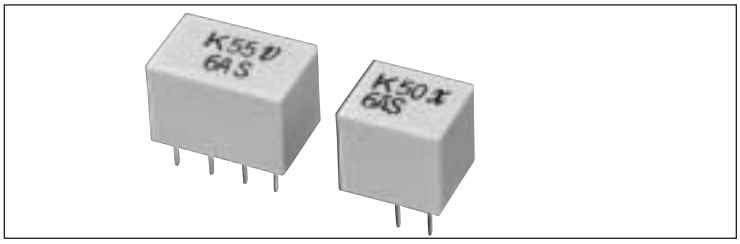

FEATURES

- Small and high selectivity
- Low insertion loss
- Adjustment free
- Various pass band width available

APPLICATIONS

- Walkie & Talkie
- Car audio (AM radio section)
- Cordless phone
- Remote control receiver

TEST CIRCUIT

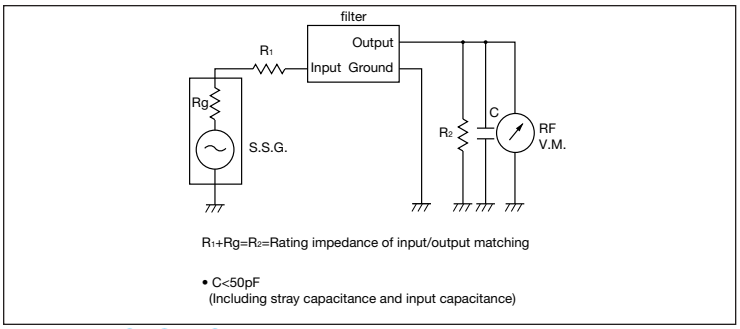

HOW TO ORDER

KBF - 455 RL - 20 A

Selectivity
A = High selectivity
AS = Super high selectivity

Pass Band-Width (kHz) at 6dB
6 Elements = 20, 15, 10, 9, 7, 6, 4
4 Elements = 25, 20, 15, 10, 9, 7, 6, 4

Number of Element
RL = 6 Elements
PL = 4 Elements

Center Frequency
450-460kHz available

Series

DIMENSIONS

millimeters (inches)

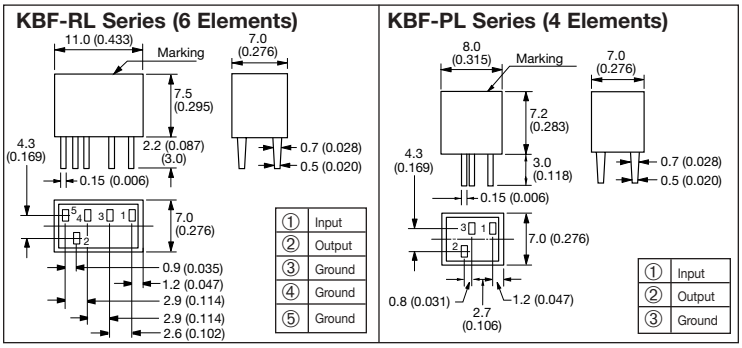

SPECIFICATIONS (455 kHz)

KBF-RL Series (6 Elements)

Part Number	Center Frequency (f_0)	Ripple	Pass Band Width 6dB	Pass Band Width 40dB	Stop Band Attenuation	Insertion Loss	Input/Output Matching Impedance	Operating Temperature
KBF-455RL-20A	455kHz±1.5kHz	2.0dB max.	±10kHz min.	±20kHz max.	37dB min.	4dB max.	1.5kΩ	-20°C to +80°C
KBF-455RL-15A			±7.5kHz min.	±15kHz max.		6dB max.		
KBF-455RL-12A			±6.0kHz min.	±12.5kHz max.			2.0kΩ	
KBF-455RL-10A			±5.0kHz min.	±12kHz max.				
KBF-455RL- 9A			±4.5kHz min.	±10kHz max.				
KBF-455RL- 7A	455kHz±1.0kHz		±3.5kHz min.	±9kHz max.				
KBF-455RL- 6AS			±3.0kHz min.	±9kHz max.	55dB min.			
KBF-455RL- 4AS			±2.0kHz min.	±7.5kHz max.				

KBF-PL Series (4 Elements)

Part Number	Center Frequency (f_0)	Ripple	Pass Band Width 6dB	Pass Band Width 40dB	Stop Band Attenuation	Insertion Loss	Input/Output Matching Impedance	Operating Temperature
KBF-455PL-25A	455kHz±1.5kHz	2.0dB max.	±12.5kHz min.	±24kHz max.	27dB min.	4dB max.	1.5kΩ	-20°C to +80°C
KBF-455PL-20A			±10.0kHz min.	±20kHz max.		6dB max.		
KBF-455PL-15A			±7.5kHz min.	±15kHz max.			2.0kΩ	
KBF-455PL-12A			±6.0kHz min.	±12.5kHz max.				
KBF-455PL-10A			±5.0kHz min.	±12kHz max.				
KBF-455PL- 7A	455kHz±1.0kHz		±3.5kHz min.	±9kHz max.				
KBF-455PL- 6AS			±3.0kHz min.	±9kHz max.	35dB min.			
KBF-455PL- 4AS			±2.0kHz min.	±7.5kHz max.				

Note: Center frequency is 450-460kHz available

KHz Band Ceramic IF Filters

KBF-RS, PS Series

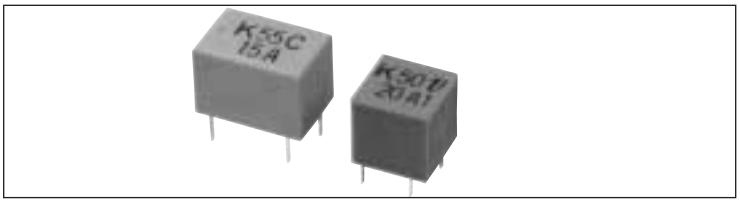

FEATURES

- Small and low profile
- High selectivity
- Low insertion loss
- Adjustment free
- Various pass band width available

APPLICATIONS

- Cordless phone
- Car audio (AM radio section)
- Pager
- Walkie & Talkie
- Remote control receiver

TEST CIRCUIT

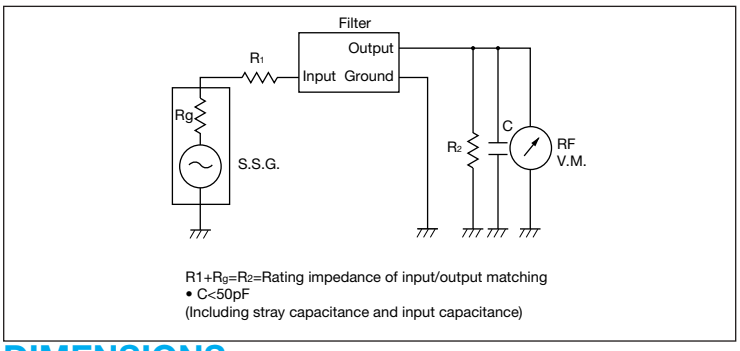

HOW TO ORDER

KBF - 455 RS - 20 A □ □

- **Lead Length**
  - □ = 3.5mm
  - C = 2.2mm
- **Option**
  - □ = Standard
- **Selectivity**
  - A = High selectivity
  - AS = Super high selectivity
- **Pass Band-Width (kHz)**
  - 6 Elements = 20, 15, 10, 9, 7, 6, 4
  - 4 Elements = 20, 15, 10, 9, 7, 6, 4
- **Number of Element**
  - RS = 6 Elements
  - PS = 4 Elements
- **Center Frequency**
  - 450-460kHz available
- **Series**

DIMENSIONS

millimeters (inches)

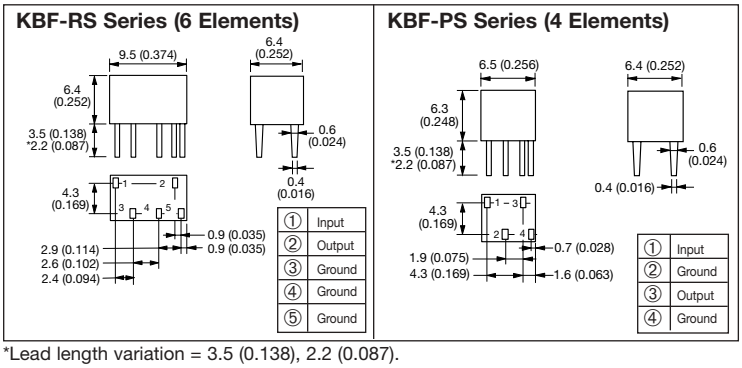

*Lead length variation = 3.5 (0.138), 2.2 (0.087).

SPECIFICATIONS (455 kHz)

KBF-RS Series (6 Elements)

*2.2 (0.087) Lead length available

Part Number	Center Frequency (f_0)	RIPPLE	Pass Band Width 6dB	Pass Band Width 40dB	Stop Band Attenuation	Insertion Loss	Input/Output Matching Impedance	Operating Temperature
KBF-455RS-20A	455kHz±1.5kHz	2.0dB max.	±10kHz min.	±20kHz max.	37dB min.	4dB max.	1.5kΩ	-20°C to +80°C
KBF-455RS-15A			±7.5kHz min.	±15kHz max.		6dB max.		
KBF-455RS-12A			±6.0kHz min.	±12.5kHz max.			2.0kΩ	
KBF-455RS-10A			±5.0kHz min.	±12kHz max.				
KBF-455RS- 9A			±4.5kHz min.	±10kHz max.				
KBF-455RS- 7A	455kHz±1.0kHz		±3.5kHz min.	±9kHz max.				
KBF-455RS- 6AS			±3.0kHz min.	±9kHz max.	55dB min.			
KBF-455RS- 4AS			±2.0kHz min.	±7.5kHz max.				

KBF-PS Series (4 Elements)

*2.2mm Lead length available

Part Number	Center Frequency (f_0)	RIPPLE	Pass Band Width 6dB	Pass Band Width 40dB	Stop Band Attenuation	Insertion Loss	Input/Output Matching Impedance	Operating Temperature
KBF-455PS-25A	455kHz±1.5kHz	2.0dB max.	±12.5kHz min.	±24kHz max.	27dB min.	4dB max.	1.5kΩ	-20°C to +80°C
KBF-455PS-20A			±10kHz min.	±20kHz max.		6dB max.		
KBF-455PS-15A			±7.5kHz min.	±15kHz max.			2.0kΩ	
KBF-455PS-12A			±6.0kHz min.	±12.5kHz max.				
KBF-455PS-10A			±5.0kHz min.	±12kHz max.				
KBF-455PS- 7A	455kHz±1.0kHz		±3.5kHz min.	±9kHz max.				
KBF-455PS- 6AS			±3.0kHz min.	±9kHz max.	35dB min.			
KBF-455PS- 4AS			±2.0kHz min.	±7.5kHz max.				

Note: Center frequency is 450-460kHz available.

Surface Acoustic Wave Filters

PAFC Series

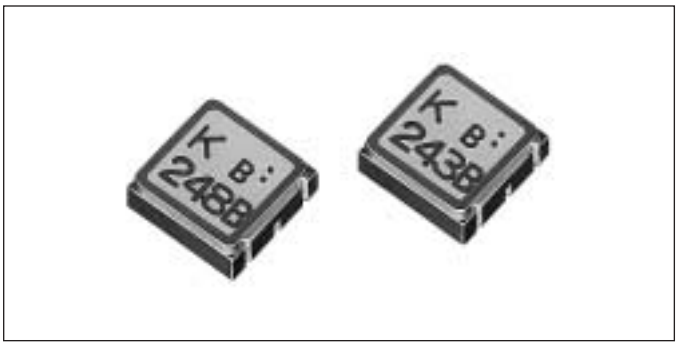

FEATURES

- Small and low profile
- Ceramic package type
- Flat pass band characteristics
- Low insertion loss
- Circuit simplification

APPLICATIONS

- PHS

HOW TO ORDER

PAFC 248 B

- B — Type
- 248 — Center Frequency
- PAFC — Series

DIMENSIONS

millimeters (inches)

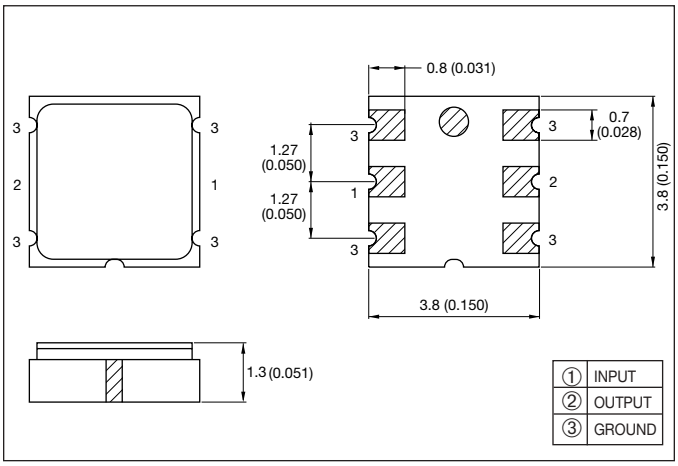

TEST CIRCUIT

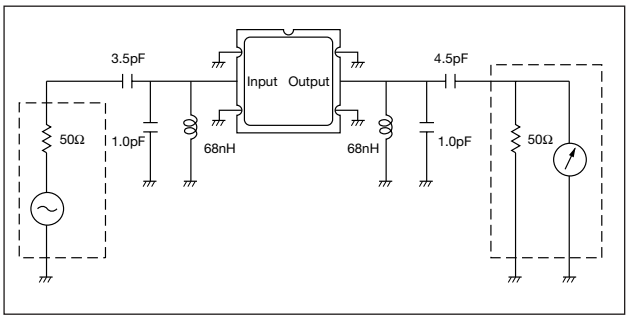

SPECIFICATIONS

Part Number	Normal Center Frequency (Fn)	Insertion Loss	Pass Band Width (at 3dB)	Stop Band Attenuation			Ripple (fn±110kHz)	Group Delay Time (fn±110kHz)	Operating Temperature
				fn±600kHz	fn±1.2kHz	fn±faMHz*			
PAFC248B	248.45MHz	4.0dB max.	±130kHz min.	30dB min.	40dB min.	60dB min.	1.5dB max..	1.2µs max.	-10 to 60°C
PAFC243B	243.95MHz	4.0dB max.	±130kHz min.	30dB min.	40dB min.	60dB min.	1.5dB max..	1.2µs max.	-10 to 60°C

RECOMMENDED LAND PATTERN

mm (inches)

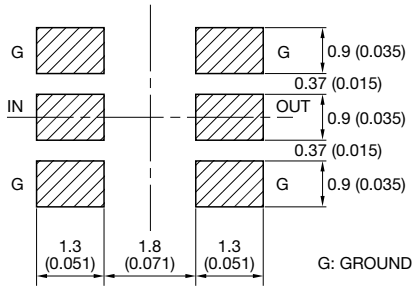

TAPING DIMENSION

mm (inches)

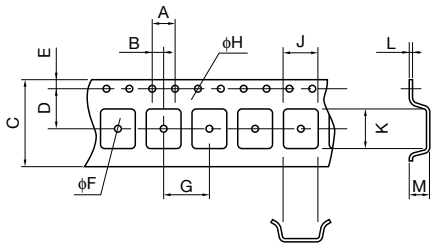

Code	A	B	C	D	E	F	G	H	J	K	L	M
Dim.	4.00 (0.157)	2.00 (0.079)	12.0 (0.472)	5.50 (0.217)	1.75 (0.069)	1.55 (0.061)	8.00 (0.315)	1.55 (0.061)	4.30 (0.169)	4.30 (0.169)	0.30 (0.012)	2.05 (0.081)

RECOMMENDED TEMPERATURE PROFILE IR REFLOW

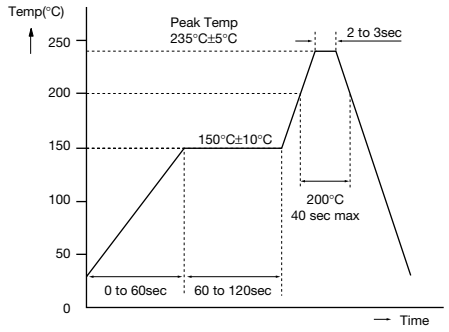

CHARACTERISTICS

PAFC248A Pass Band Characteristics

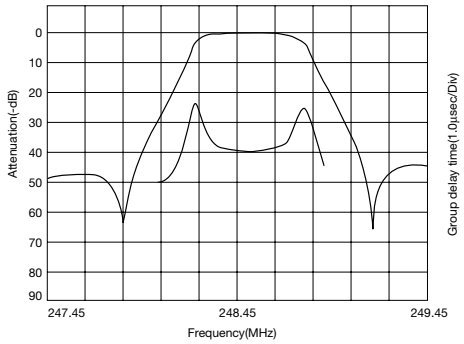

PAFC248A Spurious Characteristics

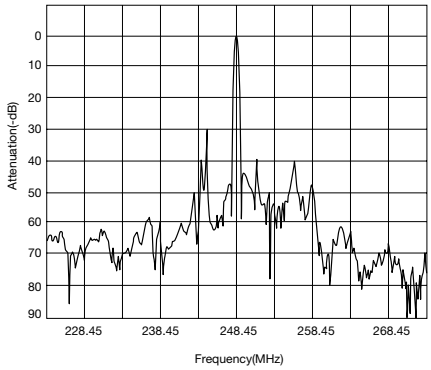

PAFC243B Pass Band Characteristics

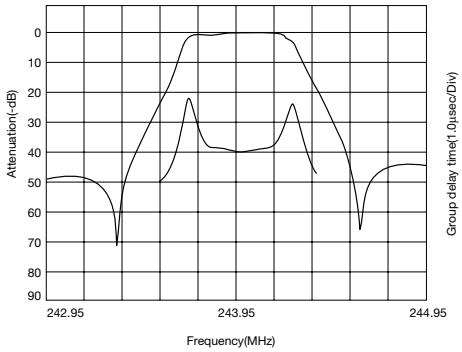

PAFC243B Spurious Characteristics

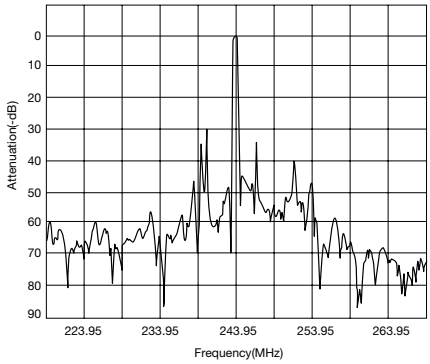

Surface Acoustic Wave Filters

SF Series

FEATURES

- Small and low profile
- Low insertion loss
- High selectivity
- Withstanding high voltage

APPLICATIONS

- PCS
- GPS

HOW TO ORDER

SF 30 - 1880 M 6 UU 01

- 01 — Custom Specification
- UU — Input/Output Condition
- 6 — Terminals
- M — Application
- 1880 — Frequency
- 30 — Package Size
- SF — Series

DIMENSIONS

millimeters (inches)

Figure A

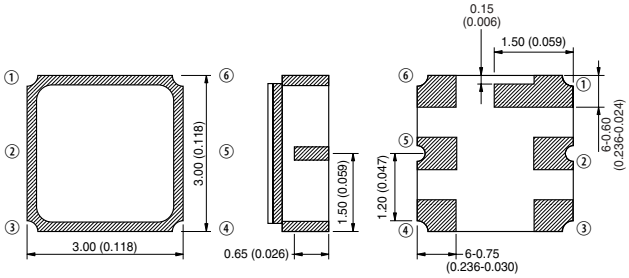

①	GROUND
②	INPUT
③	GROUND
④	GROUND
⑤	OUTPUT
⑥	GROUND

Figure B

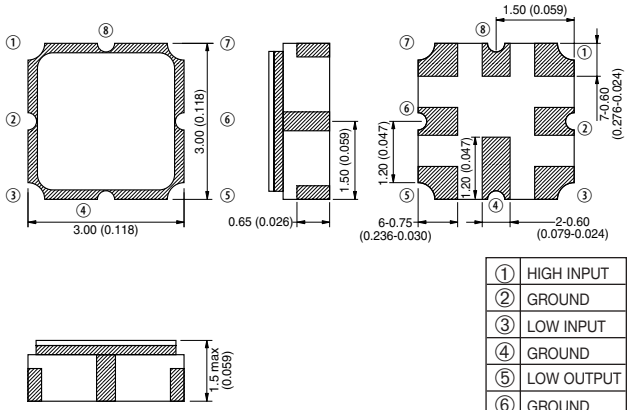

①	HIGH INPUT
②	GROUND
③	LOW INPUT
④	GROUND
⑤	LOW OUTPUT
⑥	GROUND
⑦	HIGH OUTPUT
⑧	GROUND

Figure C

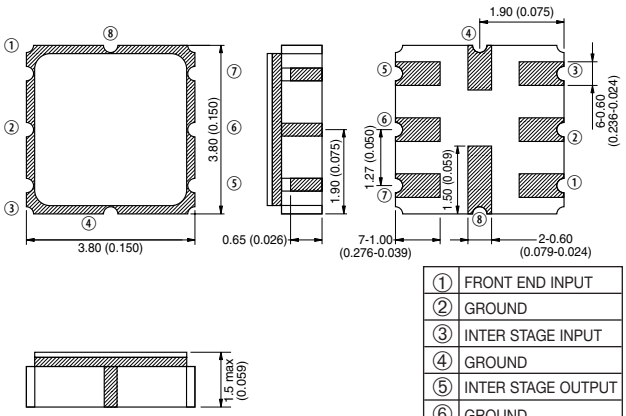

①	FRONT END INPUT
②	GROUND
③	INTER STAGE INPUT
④	GROUND
⑤	INTER STAGE OUTPUT
⑥	GROUND
⑦	FRONT END OUTPUT
⑧	GROUND

RECOMMENDED LAND PATTERN

millimeters (inches)

Figure D

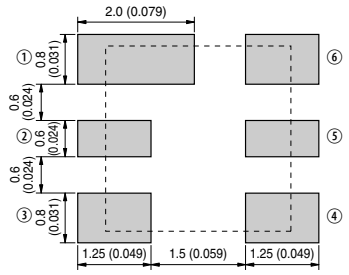

①	GROUND
②	INPUT
③	GROUND
④	GROUND
⑤	OUTPUT
⑥	GROUND

Figure E

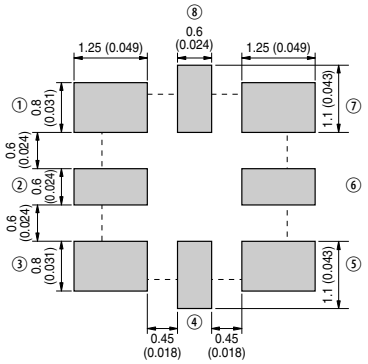

①	HIGH INPUT
②	GROUND
③	LOW INPUT
④	GROUND
⑤	LOW OUTPUT
⑥	GROUND
⑦	HIGH OUTPUT
⑧	GROUND

Figure F

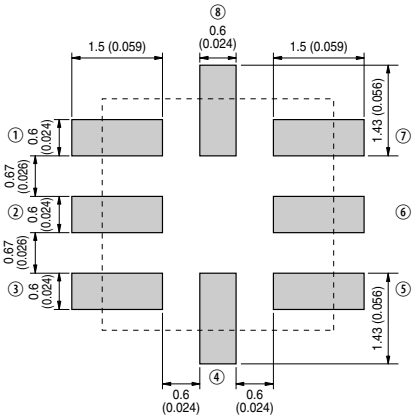

①	FRONT END INPUT
②	GROUND
③	INTER STAGE INPUT
④	GROUND
⑤	INTER STAGE OUTPUT
⑥	GROUND
⑦	FRONT END OUTPUT
⑧	GROUND

SPECIFICATIONS

Part No.	Application		Pass Band Frequency	Pass Band Insertion Loss	Pass Band Variation	Pass Band VSWR	Absolute Rejection							Operating Temperature	Storage Temperature	Dim.	Test Circuit	Rec. Land Pat.	Taping Dim.
SF30-1880M6UU00	PCS	Tx	1850MHz – 1910MHz	4.5dB max.	2.8dB max.	2.5	1590MHz – 1650MHz	1720MHz – 1780MHz	1930MHz – 1990MHz	3400MHz – 4800MHz				-30 to +80°C	-40 to +85°C	Fig. A	Fig. G	Fig. D	Dim. 1
							20dB min.	20dB min.	7dB min.	15dB min.									
SF30-1960M6UU00	PCS	Rx	1930MHz – 1990MHz	4.0dB max.	2.8dB max.	2.0	1509MHz – 1780MHz	1850MHz – 1910MHz	2100MHz – 2375MHz	3400MHz – 4350MHz						Fig. A	Fig. G	Fig. D	Dim. 1
							20dB min.	10dB min.	24dB min.	10dB min.									
SF30-1880H8UU00	PCS (Half)	Tx (Low)	1850MHz – 1880MHz	3.0dB max.	1.7dB max.	2.3	0 – 1700MHz	1700MHz – 1760MHz	1930MHz – 1960MHz	2200MHz – 2700MHz	2700MHz – 3000MHz					Fig. B	Fig. H	Fig. E	Dim. 1
							20dB min.	15dB min.	32dB min.	20dB min.	7db min.								
		Tx (High)	1880MHz – 1910 MHz	3.0dB max.	1.7dB max.	2.3	0 – 1700MHz	1700MHz – 1760MHz	1960MHz – 1990MHz	2200MHz – 2700MHz	2700MHz – 3000MHz								
							20dB min.	15dB min.	32dB min.	20dB min.	7dB min.								
SF38-1575T8UU00	GPS 2 in 1	Front End	1573.92MHz – 1576.92MHz	1.8dB max.	1.0dB max.	2.0	850MHz	1365MHz	1463MHz	1687MHz	1785MHz	1850MHz	2450MHz			Fig. C	Fig. H	Fig. F	Dim. 2
							17dB min.	25dB min.	25dB min.	25dB min.	25db min.	28db min	18db min.						
		Inter Stage	1573.92MHz – 1576.92MHz	3.0dB max.	1.0dB max.	2.0	850MHz	1365MHz	1463MHz	1687MHz	1785MHz	1850MHz	2450MHz						
							28dB min.	35dB min.	35dB min.	35dB min.	30dB min.	28dB min.	30dB min.						
SF30-1575F6UU00	GPS Single	Front End	1573.92MHz – 1576.92MHz	1.8dB max.	1.0dB max.	2.0	850MHz	1365MHz	1463MHz	1687MHz	1785MHz	1850MHz	2450MHz			Fig. A	Fig. G	Fig. D	Dim. 1
							17dB min.	25dB min.	25dB min.	25dB min.	25db min.	28db min	18db min.						
SF30-1575S6UU00	GPS Single	Inter Stage	1573.92MHz – 1576.92MHz	2.5dB max.	1.0dB max.	2.0	DC – 1300MHz	1300MHz – 1500MHz	1710MHz	1820MHz	1820MHz – 3000MHz					Fig. A	Fig. G	Fig. D	Dim. 1
							25dB min.	30dB min.	25dB min.	40dB min.	30dB min.								

CHARACTERISTICS

<PCS Tx Full>Parts No.: SF30-1880M6UU00

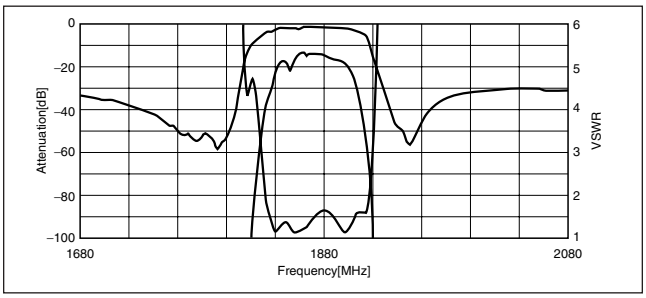

Pass Band Characteristics

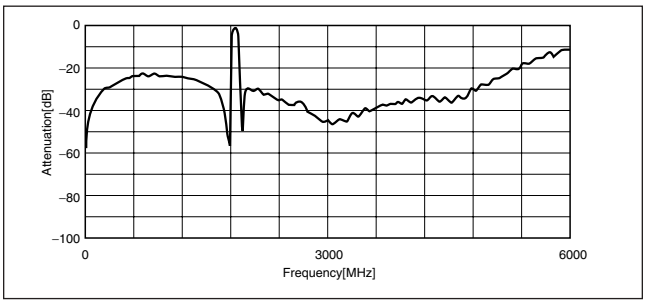

Spurious Characteristics

<PCS Tx Full>Parts No.: SF30-1880H8UU00

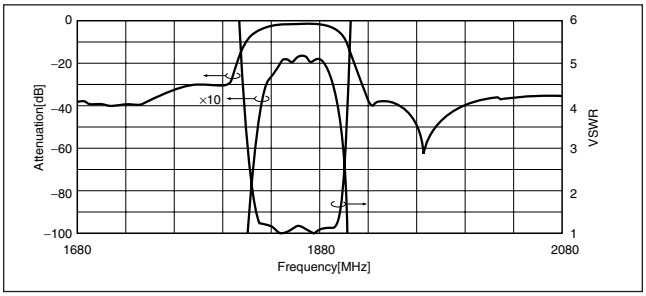

Low

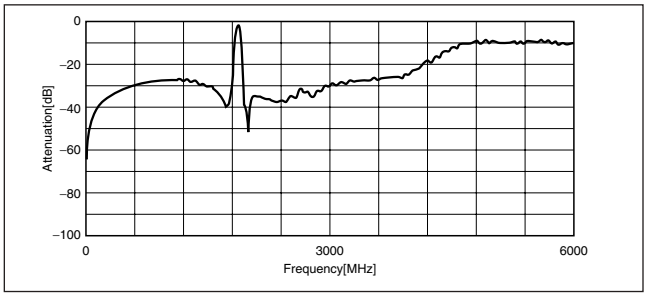

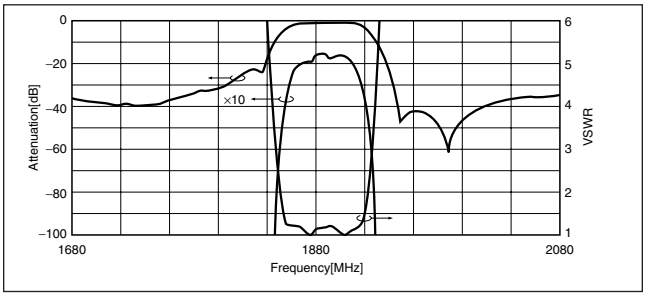

Pass Band Characteristics

High

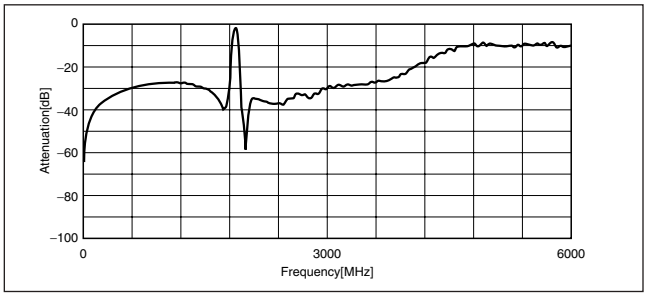

Spurious Characteristics

<GPS 2 in 1>Parts No.: SF38-1575T8UU00

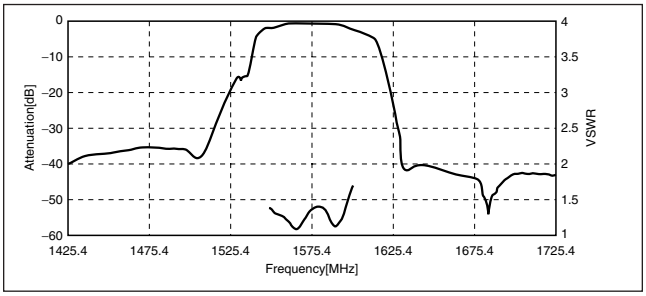

Front End

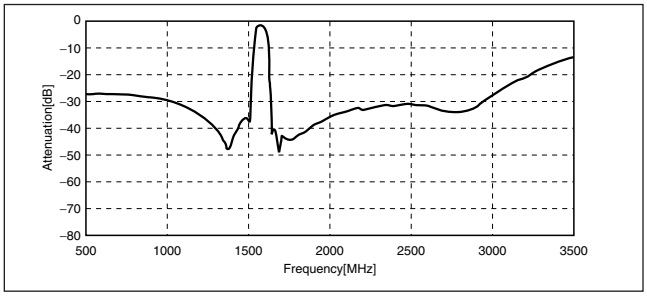

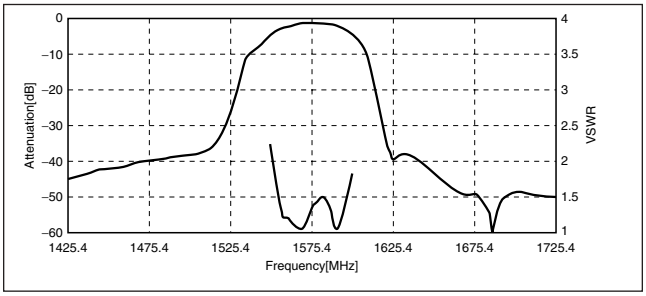

Pass Band Characteristics

Inter Stage

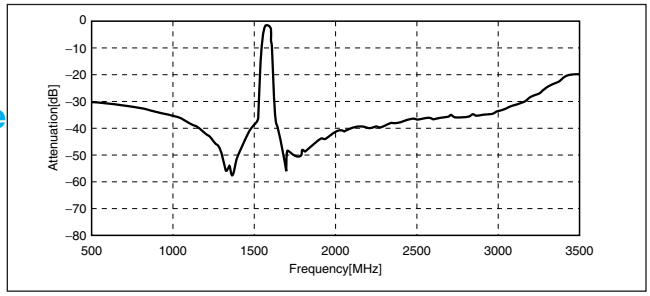

Spurious Characteristics

TEST CIRCUIT

Figure G

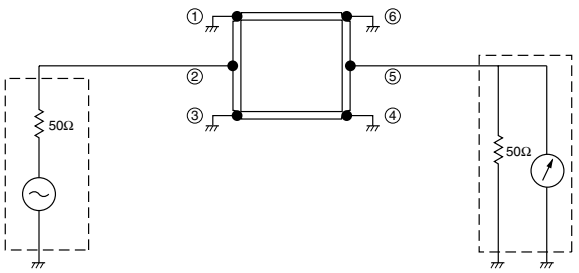

①	GROUND
②	INPUT
③	GROUND
④	GROUND
⑤	OUTPUT
⑥	GROUND

Figure H

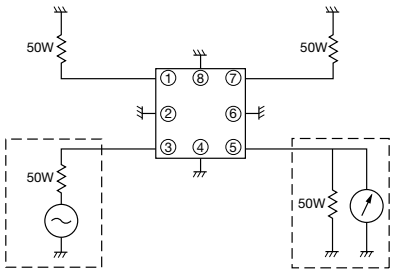

LOW or INTER STAGE Test

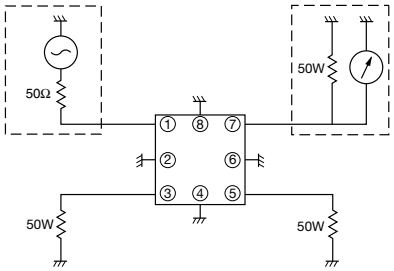

HIGH or FRONT END Test

①	HIGH INPUT	FRONT END INPUT
②	GROUND	GROUND
③	LOW INPUT	INTER STAGE INPUT
④	GROUND	GROUND
⑤	LOW OUTPUT	INTER STAGE OUTPUT
⑥	GROUND	GROUND
⑦	HIGH OUTPUT	FRONT END OUTPUT
⑧	GROUND	GROUND

RECOMMENDED TEMPERATURE PROFILE IR REFLOW

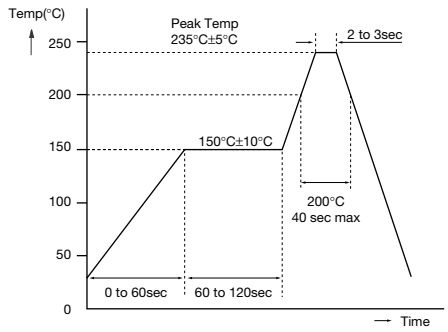

TAPING DIMENSIONS

millimeters (inches)

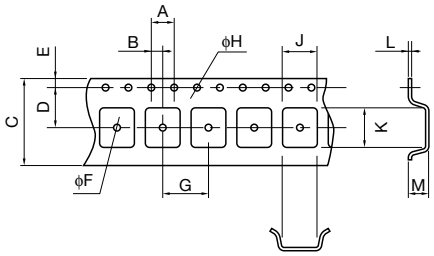

Code	A	B	C	D	F	G	H	J	K	L	M
Dim. 1	4.00 (0.157)	2.00 (0.079)	12.0 (0.472)	5.50 (0.217)	1.55 (0.061)	8.00 (0.315)	1.55 (0.061)	3.30 (0.130)	3.30 (0.130)	0.30 (0.012)	1.85 (0.073)
Dim. 2	4.00 (0.157)	2.00 (0.079)	12.0 (0.472)	5.50 (0.217)	1.55 (0.061)	8.00 (0.315)	1.55 (0.061)	4.00 (0.157)	4.00 (0.157)	0.30 (0.012)	1.40 (0.055)

Surface Acoustic Wave Filters

KAF Series

FEATURES

- Adjustment free
- Component cost and space saving
- Excellent temperature characteristics
- High reliability

APPLICATIONS

- BS tuner and converter
- CATV converter
- Cordless phone

DIMENSIONS

millimeters (inches)

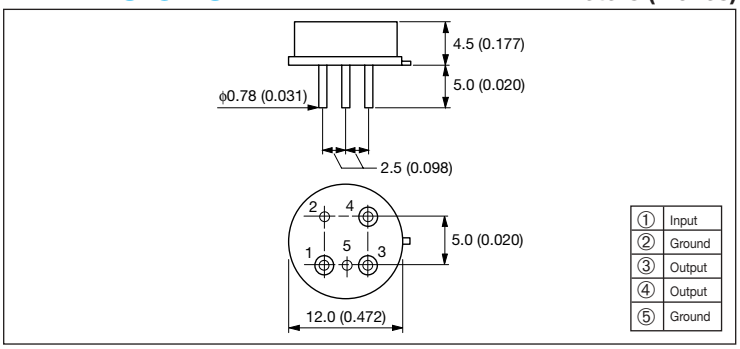

HOW TO ORDER

KAF - 134 NR - MB

- **Type**
- **Center Frequency**
- **Series** (Kyocera Acoustic Filter)

TEST CIRCUIT

KAF-134NR-MB
KAF-130NR-MA
KAF-130NR-MA
KAF- 70NR-WC
KAF- 70NR-WD

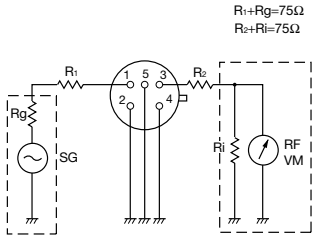

KAF- 46NR-ME
KAF- 49NR-MA

46 : L1=0.47uH
L2 No need

49 : L1=0.39uH
L2=0.33uH

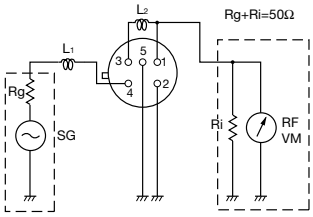

SPECIFICATIONS

Part Number	Insertion Loss (dB)	Center Frequency (MHz)	Pass Band Width at 3dB (MHz)	Pass Band Width at 30dB (MHz)	Pass Band Ripple (dB)	Group Delay Time Ripple (nSec)	Spurious Characteristics (dB)	Frequency Temperature Coefficient (ppm/°C)
KAF-134NR-MB	25 max.	134.26	26 min.	50 max.	1.0 max.	±10	35 min. (30 to 200MHz)	-80 max.
KAF-130NR-MA	22 max.	130	22 min.	45 max.				
KAF-130NR-MB	21 max.		26 min.	50 max.				
KAF-70NR-WC	32 max.	70	23 min.	30 max.		±20	30 min. (10 to 100MHz)	
KAF-70NR-WD	33 max.	70	25 min.	34 max.		±30	25 min. (10 to 100MHz)	
KAF-46NR-ME	3.0 max.	46.61 to 46.97MHz 6.0dB max.		49.67 to 49.99MHz 30dB max.				
KAF-49NR-MA		49.67 to 49.99MHz 6.0dB max.		49.61 to 49.97MHz 30dB max.				

Antenna Switch Module

LM-D118 Series - Dual Band

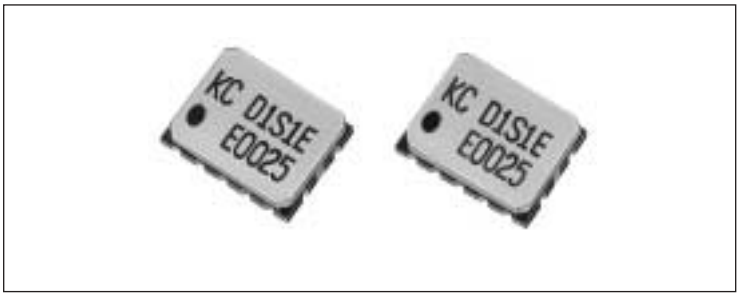

FEATURES

- Built-in ESD protection circuit
- Built-in 4 coupling capacitors and baias circuit drive the switch
- Built-in 2LPF for receiver
- Small and low profile

APPLICATIONS

- GSM/DCS, GSM/PCS

DIMENSIONS

millimeters (inches)

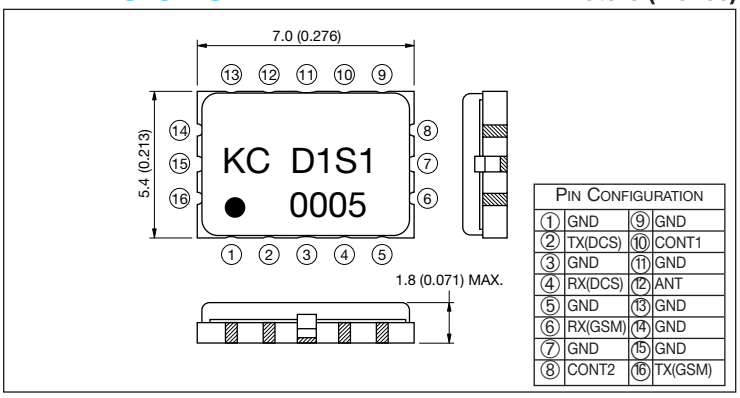

Pin Configuration			
1	GND	9	GND
2	TX(DCS)	10	CONT1
3	GND	11	GND
4	RX(DCS)	12	ANT
5	GND	13	GND
6	RX(GSM)	14	GND
7	GND	15	GND
8	CONT2	16	TX(GSM)

HOW TO ORDER

LM - D 1 18 S□ E □

- **Custom Specification**
- **ESD Function** E = Yes, □ = No
- **Custom Specification**
- **Height** 18 = 1.8mm max.
- **Type**
- **Circuit** D= Dual
- **Series**

SPECIFICATIONS

Part Number	GSM					DCS				
	TX			RX		TX			RX	
	Freq (MHz)	Ins. Loss (dB)	Att. (2*f0, 3*f0) (dB)	Freq. (MHz)	Ins. Loss (dB)	Freq. (MHz)	Ins. Loss (dB)	Att. (2*f0, 3*f0) (dB)	Freq. (MHz)	Ins. Loss (dB)
LM-D118S1E1	880 to 915	≤1.3	≥30	925 to 960	≤1.5	1710 to 1785	≤1.6	≥25 (2*f0), ≥30 (3*f0)	1805 to 1880	≤1.6

RECOMMENDED LAND PATTERN

millimeters (inches)

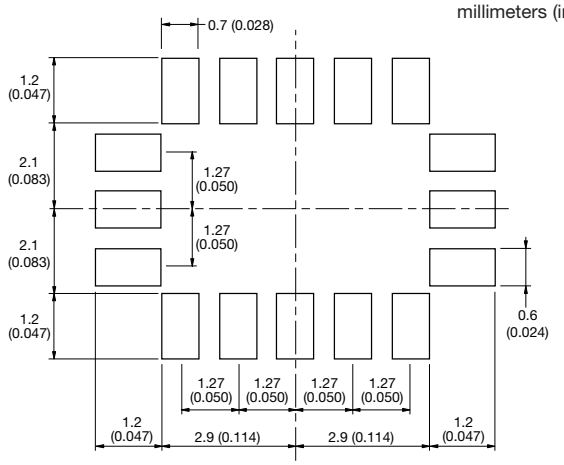

RECOMMENDED REFLOW PROFILE

millimeters (inches)

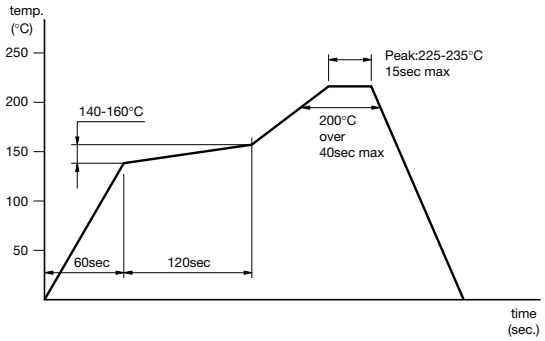

Antenna Switch Module

LM-D218 Series - Dual Band

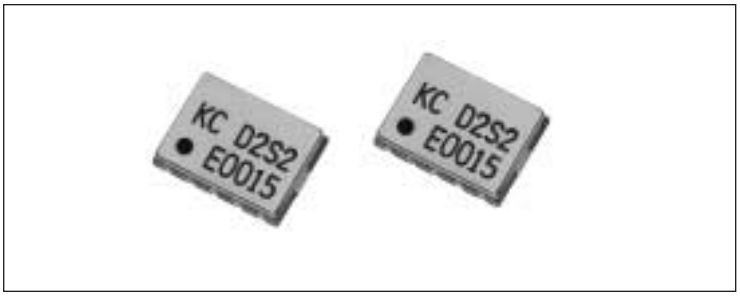

FEATURES

- Built-in ESD protection circuit (Option)
- Built-in 2LPF for receiver
- Small and low profile

APPLICATIONS

- GSM/DCS, GSM/PCS

DIMENSIONS

millimeters (inches)

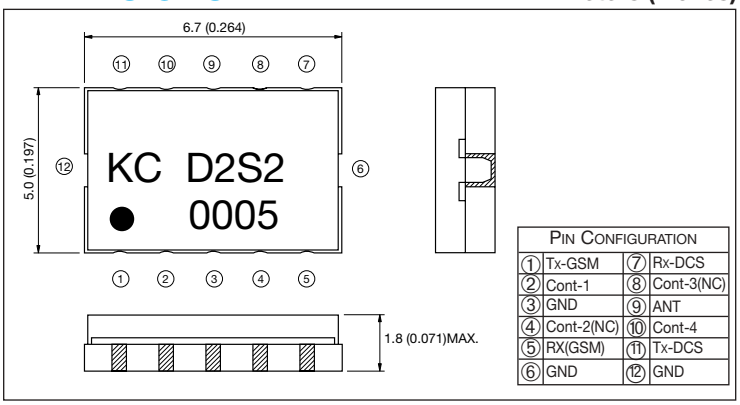

PIN CONFIGURATION			
①	Tx-GSM	⑦	Rx-DCS
②	Cont-1	⑧	Cont-3(NC)
③	GND	⑨	ANT
④	Cont-2(NC)	⑩	Cont-4
⑤	RX(GSM)	⑪	Tx-DCS
⑥	GND	⑫	GND

HOW TO ORDER

LM - D 2 18 S□ E □

- **Custom Specification**
- **ESD Function** E = Yes, □ = No
- **Custom Specification**
- **Height** 18 = 1.8mm max.
- **Type**
- **Circuit** D= Dual
- **Series**

SPECIFICATIONS

Part Number	GSM					DCS				
	TX			RX		TX			RX	
	Freq (MHz)	Ins. Loss (dB)	Att. (2*f0, 3*f0) (dB)	Freq. (MHz)	Ins. Loss (dB)	Freq. (MHz)	Ins. Loss (dB)	Att. (2*f0, 3*f0) (dB)	Freq. (MHz)	Ins. Loss (dB)
LM-D218S2-2	880 to 915	≤1.2	≥30	925 to 960	≤1.3	1710 to 1785	≤1.5	≥25	1805 to 1880	≤1.3

RECOMMENDED LAND PATTERN

millimeters (inches)

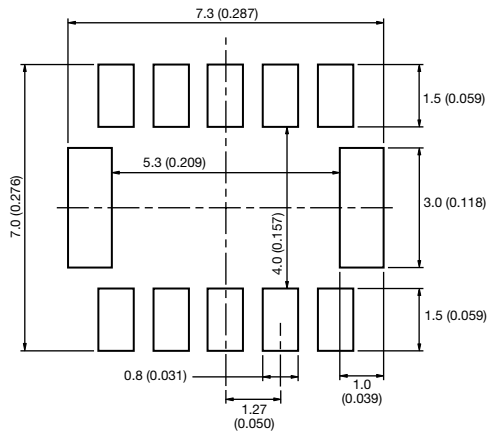

RECOMMENDED REFLOW PROFILE

millimeters (inches)

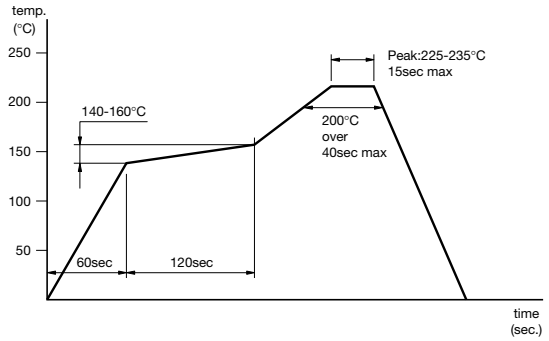

KYOCERA

Antenna Switch Module

LM-D518 Series - Dual Band

FEATURES

- Small Size
- Low Loss
- Built-in ESD protection circuit (Option)
- Built-in 2LPF for receiver

APPLICATIONS

- GSM/DCS

DIMENSIONS

millimeters (inches)

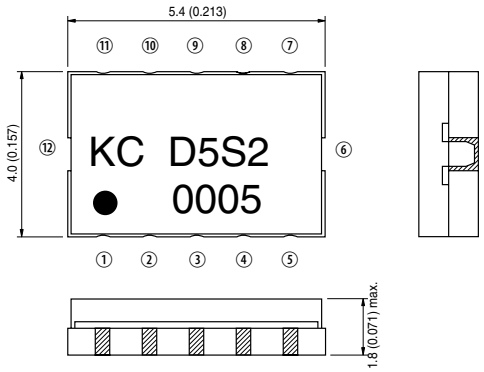

PIN CONFIGURATION			
①	Rx-DCS	⑦	GND
②	Cont-1	⑧	ANT
③	Tx-DCS	⑨	GND
④	GND	⑩	Rx(GSM)
⑤	Tx(GSM)	⑪	Cont-2
⑥	GND	⑫	GND

HOW TO ORDER

LM - D 5 18 S□ E □

- **Custom Specification**
- **ESD Function** E = Yes, □ = No
- **Custom Specification**
- **Height** 18 = 1.8mm max.
- **Type**
- **Circuit** D= Dual
- **Series**

SPECIFICATIONS

Part Number	GSM					DCS				
	TX			RX		TX			RX	
	Freq (MHz)	Ins. Loss (dB)	Att. (2*f0, 3*f0) (dB)	Freq. (MHz)	Ins. Loss (dB)	Freq. (MHz)	Ins. Loss (dB)	Att. (2*f0, 3*f0) (dB)	Freq. (MHz)	Ins. Loss (dB)
LM-D518S2-2	880 to 915	≤1.1	≥30	925 to 960	≤1.2	1710 to 1785	≤1.3	≥25	1805 to 1880	≤1.2

RECOMMENDED LAND PATTERN

millimeters (inches)

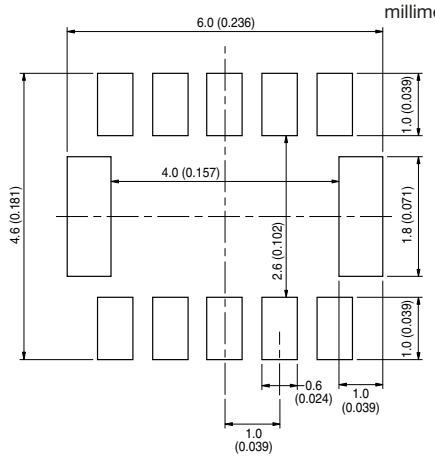

RECOMMENDED REFLOW PROFILE

millimeters (inches)

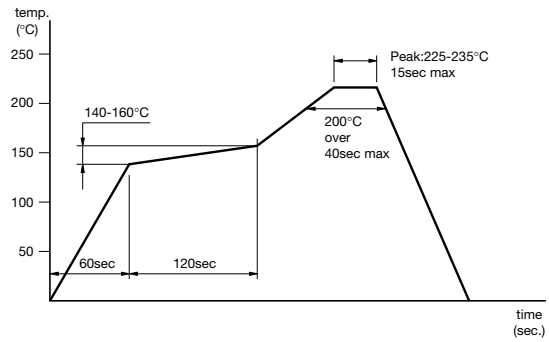

Antenna Switch Module

LM-T118 Series - Triple Band

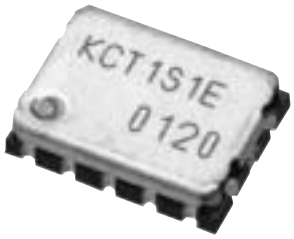

FEATURES

- Built-in ESD protection circuit
- Built-in 2 coupling capacitors and baias circuit to drive the switch
- Built-in 2LPF for receiver
- Small and low profile

APPLICATIONS

- GSM/DCS/PCS

DIMENSIONS

millimeters (inches)

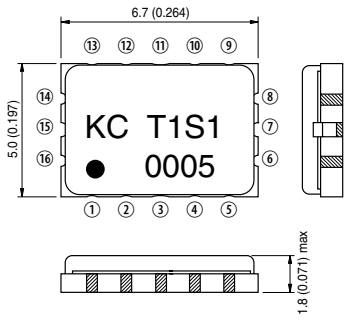

Pin Configuration			
1	GND	9	GND
2	Tx(DCS)	10	Cont-2
3	GND	11	GND
4	Rx(DCS)	12	ANT
5	GND	13	GND
6	Rx(GSM)	14	Cont-3
7	GND	15	GND
8	Cont-1	16	Tx(GSM)

HOW TO ORDER

LM - T 1 18 S□ E □

- **Custom Specification**
- **ESD Function** E = Yes, □ = No
- **Custom Specification**
- **Height** 18 = 1.8mm max.
- **Type**
- **Circuit**
- **Series**

SPECIFICATIONS

Part Number	GSM					DCS/PCS				
	TX			RX		TX			RX	
	Freq (MHz)	Ins. Loss (dB)	Att. (2*f0, 3*f0) (dB)	Freq. (MHz)	Ins. Loss (dB)	Freq. (MHz)	Ins. Loss (dB)	Att. (2*f0, 3*f0) (dB)	Freq. (MHz)	Ins. Loss (dB)
LM-T118S1E2	880 to 915	≤1.2	≥35(2*f0), ≥30(3*f0)	925 to 960	≤1.2	1710 to 1785	≤1.5	≥28(2*f0), ≥30(3*0)	1805 to 1880	≤1.5
						1850 to 1910			1930 to 1990	≤1.6

RECOMMENDED LAND PATTERN

mm (inches)

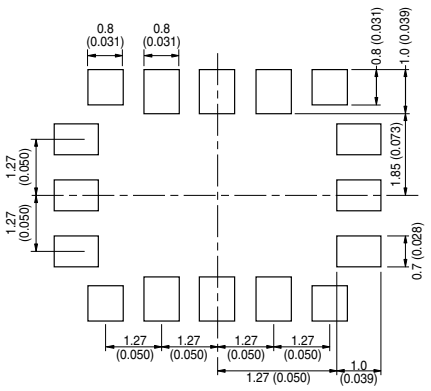

RECOMMENDED REFLOW PROFILE

mm (inches)

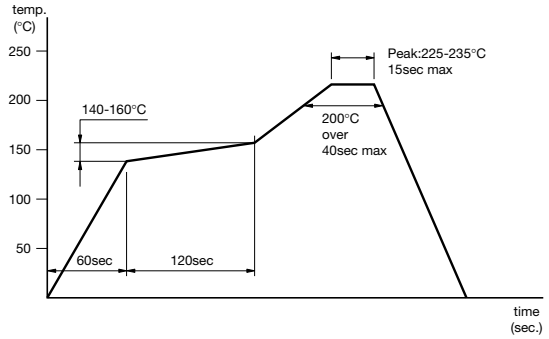

EMI Filters

KNF Series

FEATURES

- Disturbed constant type LC filter. Prevents ringing caused by circuit impedance. Suitable for high speed digital circuits and visual line circuits.
- Stable noise attenuation over wide frequency ranges
- Low profile (H=0.95mm max.) suitable for miniature electronic equipment
- First class auto-placement

APPLICATIONS

- PCs, laser printers, cellular phone, clock data lines for LCD display
- High speed video signal circuits and interface circuits
- High speed digital circuits
- Anti-noise solution
  Achieves effective noise suppression in noisy high speed circuits without signal waveform distortion

DIMENSIONS

millimeters (inches)

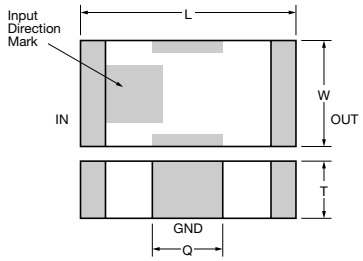

	L	W	T	Q
KNF32	3.20±0.20 (0.126±0.008)	1.60±0.20 (0.063±0.008)	1.00±0.20 (0.039±0.008)	0.60±0.30 (0.024±0.012)
KNF21	2.00±0.20 (0.079±0.008)	1.25±0.20 (0.049±0.008)	0.80±0.15 (0.031±0.006)	0.40±0.30 (0.016±0.012)

HOW TO ORDER

KNF - 21 050 - W 3

Quantity Per Reel
3 = 3,000 pcs

Taping Direction (See Table 1)
W = Standard X = Option

Frequency
025 = 25MHz 200 = 200MHz
050 = 50MHz 400 = 200MHz
100 = 100MHz

Size EIA (EIAJ)
32 = 1206 (3216)
21 = 0805 (2012)

Series

SPECIFICATIONS

Part Number	Cut Off Frequency (MHz)	Capacitance (+50/-20%) (pF)	20dB Attenuation (Typical)	Rated Current (mA)	Rated Voltage (VDC)
KNF32025	25MHz	235pF	200 - 600 MHz	200mA	25VDC
KNF32050	50MHz	130pF	350 - 850 MHz		
KNF32100	100MHz	65pF	450 - 950 MHz		
KNF32200	200MHz	33pF	700 - 1200 MHz		
KNF21025	25MHz	235pF	200 - 600 MHz	150mA	
KNF21050	50MHz	130pF	350 - 850 MHz		
KNF21100	100MHz	65pF	450 - 950 MHz		
KNF21200	200MHz	33pF	700 - 1200 MHz		
KNF21400	400MHz	17pF	900 - 1400 MHz		

Cut off frequency at attenuation typical 3dB, max 6dB
Operating temperature = -25 to 85(°C)

FREQUENCY CHARACTERISTICS

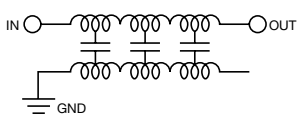

Equivalent Circuit

KNF32 Series

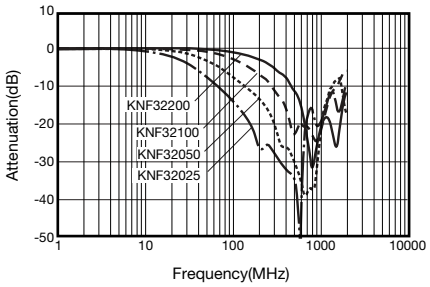

KNF21 Series

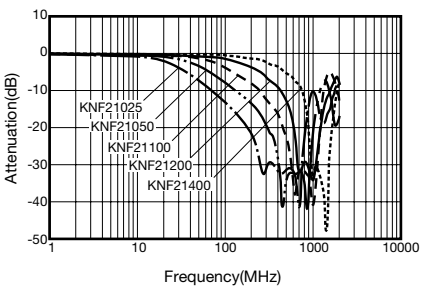

EMI Filters

KNF Series

<IMPEDANCE FREE>

- Stable attenuation against impedance change
- Good impedance matching without ringing on distortion even at the time of IC ON/OFF and pattern layout change

TEST CIRCUIT

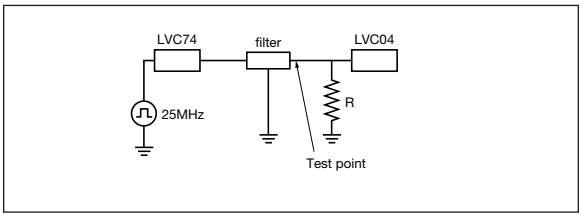

OUTPUT WAVE FORM (Clock Frequency 25MHz)

R	LC Filter	KNF21100
1MΩ	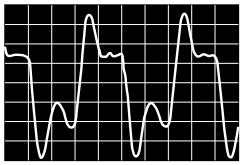	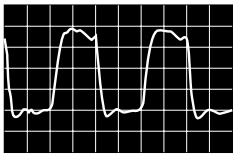
300Ω	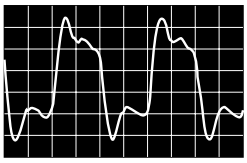	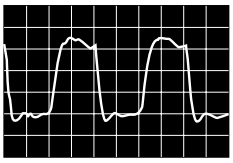

<NO RINGING> - EXCELLENT IMPEDANCE MATCHING

KNF Series Output Wave Form	LC Filter Output Wave Form	No Filter Output Wave Form
		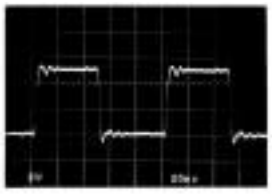

- Wide attenuation up to high frequency range without distortion

TEST CIRCUIT

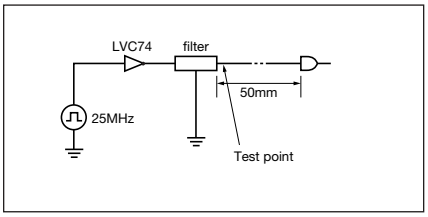

WIDE ATTENUATION BANDWIDTH

KNF21100 Series	LC Filter (T-Type)
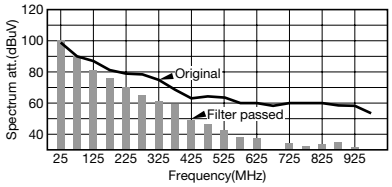	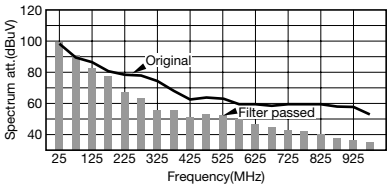

RECOMMENDED LAND PATTERN

mm (inches)

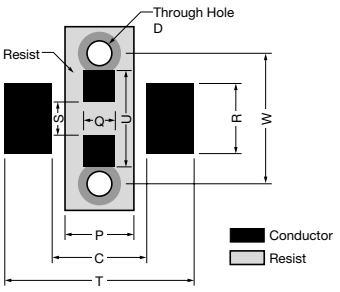

	T	W	R	C	P	Q	S	D	U
KNF21	3.20 (0.126)	2.30 (0.091)	1.00 (0.039)	1.20 (0.047)	0.80 (0.031)	0.40 (0.016)	0.60 (0.024)	0.30-0.40 (0.012-0.016)	2.00 (0.079)
KNF32	4.40 (0.173)	3.00 (0.118)	1.40 (0.055)	2.50 (0.098)	1.20 (0.047)	0.60 (0.024)	0.60 (0.024)	0.50 (0.020)	2.40 (0.094)

PACKAGING SPECIFICATION (Table 1)

Taping = 3000/reel

mm (inches)

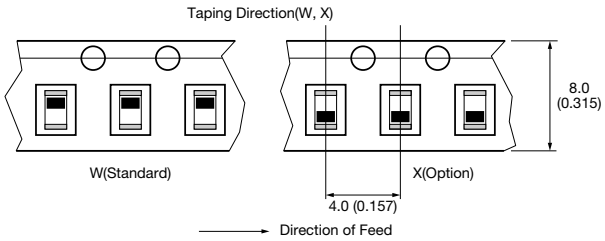

EMI Filter Array

KNA Series

FEATURES

- Disturbed constant type LC filter. Prevents ringing caused by circuit impedance. Suitable for high speed digital circuits and visual line circuits.
- Stable noise attenuation over wide frequency ranges.
- Low profile (H=1.0mm max.) suitable for miniature electronic equipment.
- First class auto-placement

DIMENSIONS

millimeters (inches)

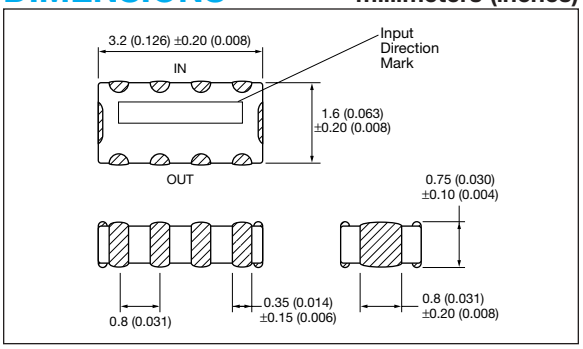

APPLICATIONS

- PCs, laser printers, cellular phone, clock data lines for LCD display
- High speed video signal circuits and interface circuits
- High speed digital circuits
- Anti-noise solution
  Achieves effective noise suppression in noisy high speed circuits without signal waveform distortion

FREQUENCY CHARACTERISTICS

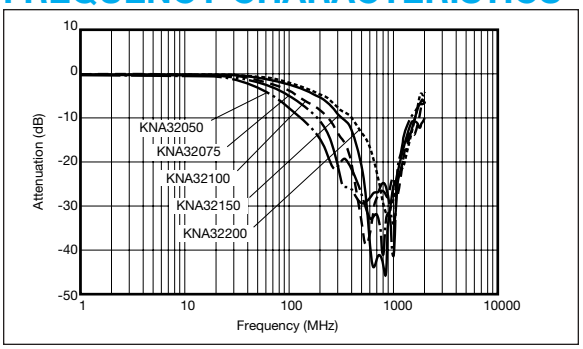

HOW TO ORDER

KNA - 32 050 - W 3

- **Quantity Per Reel**
  3 = 3,000 pcs
- **Taping Direction (See Table 1)**
  W = Standard X = Option
- **Frequency**
  050 = 50MHz 100 = 100MHz 200 = 200MHz
  *Frequency at Attenuation typical 3dB, Max 6dB
- **Size EIA (EIAJ)**
  32 = 1206 (3216)
- **Series**

SPECIFICATIONS

Part Number	Cut Off Frequency (MHz)	Capacitance (+50/-20%) (pF)	20dB Attenuation (Typical)	Rated Current (mA)	Rated Voltage (VDC)
KNA32050	50MHz	115pF	350 - 850 MHz	100mA	25VDC
KNA32075	75MHz	82pF	400 - 900 MHz	100mA	25VDC
KNA32100	100MHz	65pF	450 - 950 MHz	100mA	25VDC
KNA32150	150MHz	45pF	600 - 1100 MHz	100mA	25VDC
KNA32200	200MHz	35pF	700 - 1200 MHz	100mA	25VDC

Operating temperature = -25 to 85(°C)

RECOMMENDED LAND PATTERN

mm (inches)

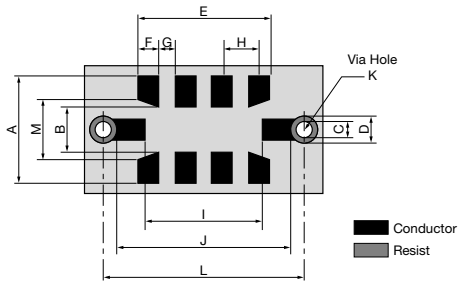

PACKAGING SPECIFICATION (Table 1)

Taping = 3000/reel

mm (inches)

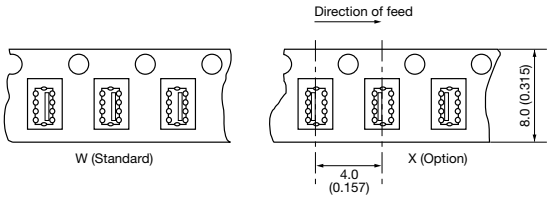

Code	A	B	C	D	E	F	G	H	I	J	K	L	M
Dimension	2.20 (0.087)	1.00 (0.039)	0.40 (0.016)	0.60 (0.024)	2.80 (0.110)	0.40 (0.016)	0.40 (0.016)	0.80 (0.031)	2.60 (0.102)	3.80 (0.150)	0.30-0.40 (0.012-0.016)	4.20 (0.165)	1.30 (0.051)

EMI Filters

KNH Series

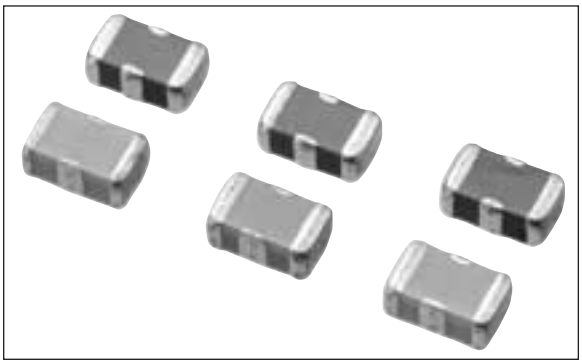

FEATURES

- 0805 size. Rated current up to 2A.
- Wider Attenuation bandwidth due to distributed constant circuit type
- Particularly effective for filtering power (Vcc) lines

APPLICATIONS

- PCs, laser printers, cellular phone, power/signal lines for LCD display, office equipment
- AV power supply/signal line, TV, VCR, etc.
- High current signal lines

DIMENSIONS

millimeters (inches)

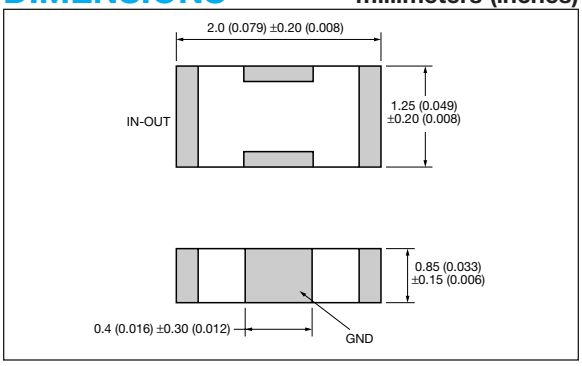

HOW TO ORDER

KNH - 21 104 - 3 AA

Code
AA = Standard

Quantity Per Reel
3 = 3,000 pcs

Capacitance Value
101 = 100pf 220 = 22pF 470 = 47pF
104 = 100nF 221 = 220pF 471 = 470pF
473 = 47nF

Size EIA (EIAJ)
21 = 0805 (2012)

Series

ATTENUATION CHARACTERISTICS

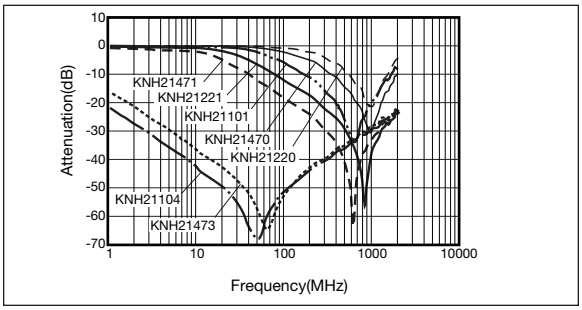

SPECIFICATIONS

Type	Capacitance (+50/-20%) (pF)	Rated Current (A)	Rated Voltage (VDC)	Direct-Current Resistance (Ω)
KNH21104	100,000	2.0	25	<0.02
KNH21473	47,000	2.0	50	<0.02
KNH21471	470	1.0	50	<0.08
KNH21221	220	1.0	50	<0.08
KNH21101	100	1.0	50	<0.08
KNH21470	47	1.0	50	<0.08
KNH21220	22	1.0	50	<0.08

Operating temperature = -25 to 85(°C)

<ELECTRICAL CHARACTERISTICS>

- Wide attenuation range including surrounding circuit

TEST CIRCUIT

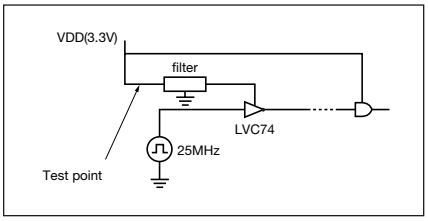

ATTENUATION EFFECT OF POWER SUPPLY NOISE

KNH Series

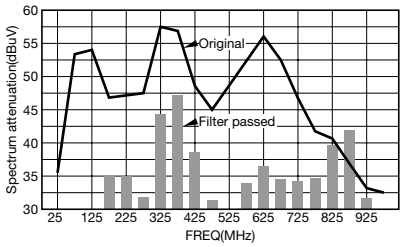

LC Filter

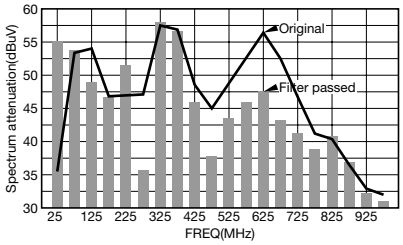

RECOMMENDED LAND PATTERN

mm (inches)

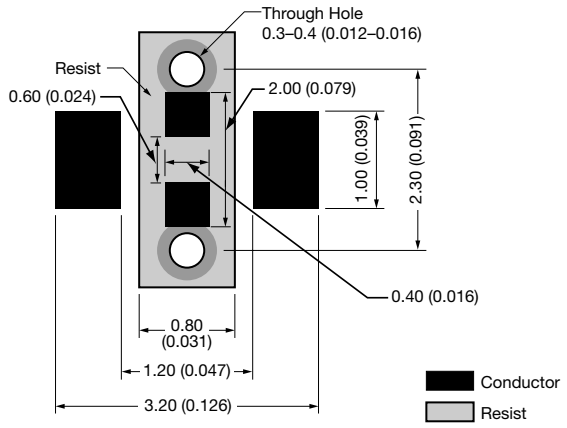

PACKAGING SPECIFICATION

Taping = 3000/reel

mm (inches)

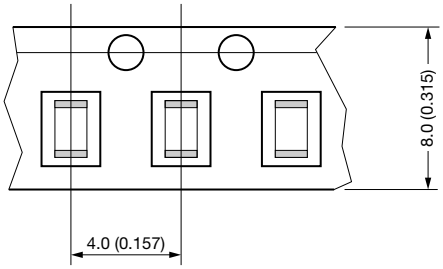

Piezo Ceramic Elements

KBS Series

DIMENSIONS

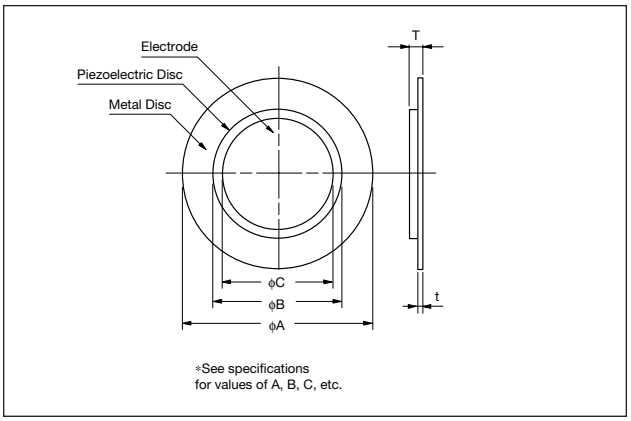

STANDARD LEADS

millimeters (inches)

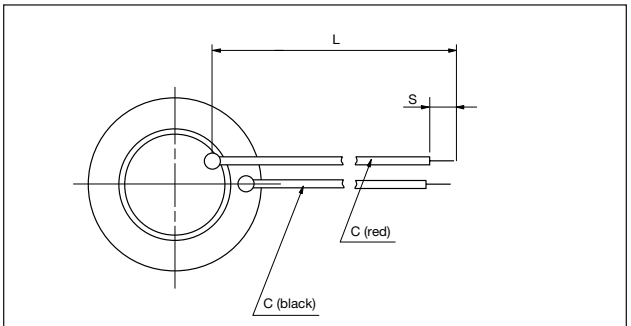

W = Thickness	AWG-32 Ul-1571		
L = Length	50±5 (1.969±0.197)	75±5 (2.953±0.197)	100±10 (3.937±0.394)
S = Strip	3±1 (0.118±0.039)		
C = Color	red, black		

FEATURES

- Wide variety of tones by connecting to IC
- Low current consumption, thin and light design
- High reliability and no contact noise

APPLICATIONS

- Clocks, electronic calculators, pagers, cameras
- Equipment using microcontrollers (microwave ovens, TVs, stereos, automobiles, etc.)
- Telecommunications (facsimile machines, telephones)
- Electronic medical instruments

HOW TO ORDER

KBS - 20 DA - 7 A □ -1

- **Option Spec** — Lead-wire spec etc.
- **Metal** — Blank = Brass
- **2-Electrode Type** — A = Element only; C = With lead
- **Resonant Frequency**
- **Appearance** — Disc-shaped buzzer
- **Diameter**
- **Series**

SPECIFICATIONS

millimeters (inches)

Part Number	Resonant Frequency (kHz)	Resonant Impedance (Ω)	Static Capacitance (pF)	Dimensions					Metal Disc Material
				Metal Disc (øA)	Ceramic Disc (øB)	Electrode (øC)	Total Thickness (T)	Metal Disc Thickness (t)	
KBS-13DA-12A	12.0±1.2	700	5,000±30%	13.4±0.10 (0.528±0.004)	10.0±0.30 (0.394±0.012)	9.00 (0.354)	0.36±0.10 (0.014±0.004)	0.15±0.03 (0.006±0.001)	Brass
KBS-15DA-9A-2	10.5±3.0	600	8,000±30%	15.0±0.10 (0.591±0.004)	12.0±0.30 (0.472±0.012)	11.0 (0.433)	0.42±0.10 (0.017±0.004)	0.20±0.03 (0.008±0.001)	Brass
KBS-20DA-7A	6.6±1.0	300	10,000±30%	20.0±0.10 (0.787±0.004)	14.2±0.30 (0.559±0.012)	13.0 (0.512)	0.45±0.10 (0.018±0.004)	0.20±0.03 (0.008±0.001)	Brass
KBS-23DA-4A	4.0±1.0	600	12,000±30%	22.8±0.10 (0.898±0.004)	15.0±0.30 (0.591±0.012)	14.0 (0.551)	0.41±0.10 (0.016±0.004)	0.15±0.03 (0.006±0.001)	Brass
KBS-27DA-5A	4.6±0.5	200	20,000±30%	27.0±0.10 (1.063±0.004)	20.2±0.30 (0.795±0.012)	19.0 (0.748)	0.53±0.10 (0.021±0.004)	0.25±0.03 (0.010±0.001)	Brass
KBS-30DA-1A	1.4±0.5	500	*48,000±30%	30.0±0.10 (1.181±0.004)	20.2±0.30 (0.795±0.012)	19.0 (0.748)	0.23±0.10 (0.009±0.004)	0.10±0.03 (0.004±0.001)	Brass
KBS-35DA-3A	2.9±0.5	200	30,000±30%	35.0±0.10 (1.378±0.004)	25.0±0.30 (0.984±0.012)	23.5 (0.925)	0.53±0.10 (0.021±0.004)	0.25±0.03 (0.010±0.001)	Brass

*Measured at 120Hz, all others at 1kHz

Piezo Ceramic Elements

KBS Series

DIMENSIONS

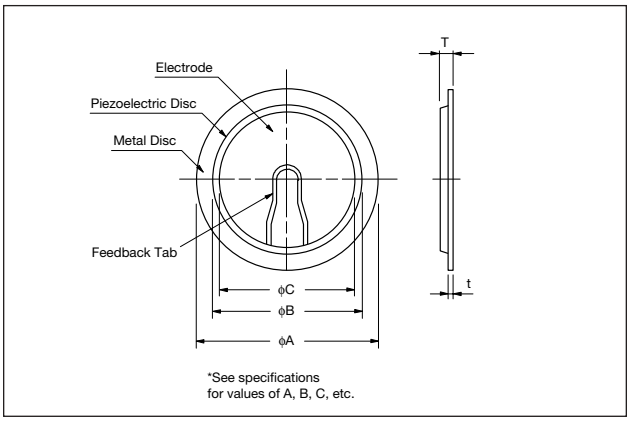

STANDARD LEADS

millimeters (inches)

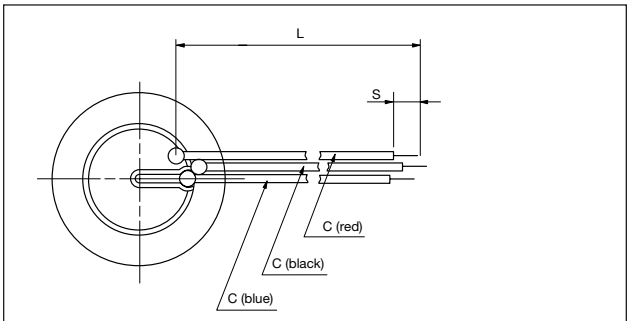

W = Thickness	AWG-32 Ul-1571		
L = Length	50±5 (1.969±0.197)	75±5 (2.953±0.197)	100±10 (3.937±0.394)
S = Strip	3±1 (0.118±0.039)		
C = Color	red, black, blue		

FEATURES

- High sound pressure level and clear sound by connecting to a self oscillating circuit
- Thin and light design
- High reliability and no contact noise

APPLICATIONS

- Smoke detectors, security alarms and other warning devices
- Pagers, electronic calculators, alarm signals
- Telephones

HOW TO ORDER

KBS - 35 DA - 3 G □ -3

- **Option Spec** — Lead-wire spec etc.
- **Metal Disc Material** — □ = Brass; S = Stainless Steel; L = 42 Alloy
- **3-Electrode Type** — G = G-Pattern; GC = G-Pattern with Leads
- **Resonant Frequency**
- **Appearance** — Disc-shaped buzzer
- **Diameter (mm)**
- **Series**

SPECIFICATIONS (G TYPE)

millimeters (inches)

Part Number	Resonant Frequency (kHz)	Resonant Impedance (Ω)	Static Capacitance (pF)	Dimensions					Metal Disc Material
				Metal Disc (øA)	Ceramic Disc (øB)	Electrode (øC)	Total Thickness (T)	Metal Disc Thickness (t)	
KBS-27DA-5G	4.6±0.5	200	16,000±30%	27.0±0.10 (1.063±0.004)	20.2±0.30 (0.795±0.012)	19.0 (0.748)	0.53±0.10 (0.021±0.004)	0.25±0.03 (0.010±0.001)	Brass
KBS-35DA-3G	2.9±0.5	200	25,000±30%	35.0±0.10 (1.378±0.004)	25.0±0.30 (0.984±0.012)	23.6 (0.929)	0.53±0.10 (0.021±0.004)	0.25±0.03 (0.010±0.001)	Brass

Piezo Buzzers

KBS Series

FEATURES

- Low current consumption - High sound pressure
- Compact, light design
- High reliability and no contact noise
- Easy-mounting
- Wide variety of tones can be made by cavity designing
- Functions over a wide range of Input Voltage

APPLICATIONS

- Confirmation tone for various office automation equipment
- Automobiles, microwave ovens, refrigerators
- Clocks, toys, game machines

HOW TO ORDER

KBS - 27 DB - 3 A

- **Type of Terminals**
  A = With lead P = Round pin
- **Resonant Frequency**
- **Appearance**
  Buzzer with casing
- **Diameter (mm)**
- **Series**

DIMENSIONS

millimeters (inches)

KBS-15DB-4A

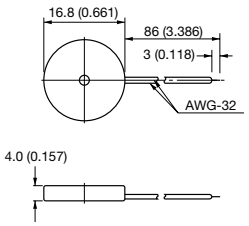

KBS-13DB-4P-2

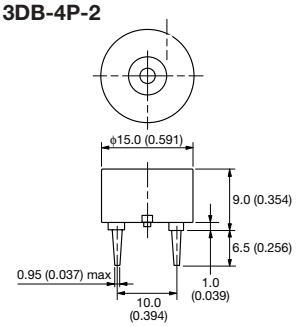

KBS-20DB-5A

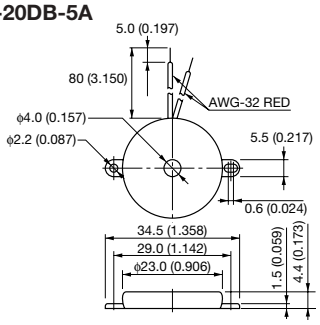

KBS-27DB-3A

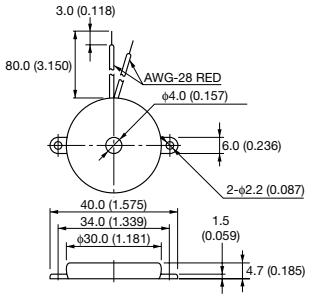

KBS-20DB-2P-0

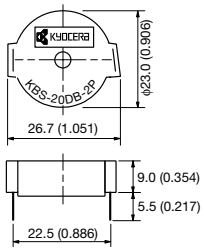

KBS-20DB-4P-0

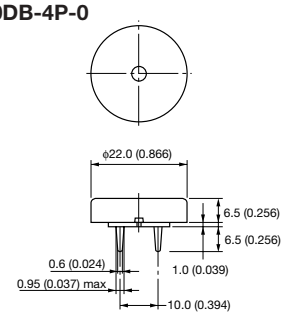

SPECIFICATIONS

Part Number	Sound Pressure Level	Static Capacitance
KBS-13DB-4P-2	73db min. 4.096kHz 10Vp-p SQ 30cm	10nF±30%
KBS-20DB-2P-0	75db min. 2.048kHz 10Vp-p SQ 30cm	22nF±30%
KBS-20DB-4P-0	77db min. 4.096kHz 10Vp-p SQ 30cm	14nF±30%
KBS-15DB-4A	72db min. 4.096kHz 10Vp-p SQ 30cm	9.5nF±30%
KBS-20DB-5A	75db min. 5.0kHz 10Vp-p SQ 30cm	10nF±30%
KBS-27DB-3A	75db min. 5.0kHz 10Vp-p SQ 30cm	20nF±30%

Trimmer Capacitors

CTZ2, CTZ3 Series

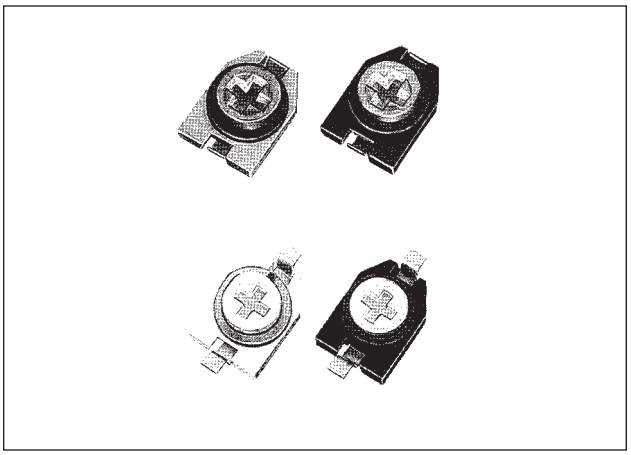

FEATURES

- SMD small & thin package
- Wide capacitance range
- CTZ3S-A series-small setting drift
- Washable and non-washable types available
- Plus slot(+) suitable for auto-adjustment (Minus slot is also available)

APPLICATIONS

- AV equipment
- Pager
- Cellular phone
- TCXO
- Cordless phone
- Keyless Entry

SPECIFICATIONS

Part Number		Capacitance (pF) Max. Value -0%+100%	Min. Value Standard	Min. Value A Type	Q 1±0.1 (MHz)	Temperature Coefficient (ppm/°C)
CTZ2 S/E	03A	3	2.0	—	>150	NP0±500
	05A	5	3.0	—	>150	NP0±500
	10A	10	3.0	—	>150	NP0±500
	20C	20	5.5	—	>150	N750±500
CTZ3 S/E	03A	3	1.0	1.5	>300	NP0±500
	05A	5	1.5	2.0	>300	NP0±500
	10A	10	2.5	4.0	>300	NP0±500
	10B	10	1.5	2.0	>300	N400±500
	20C	20	4.5	7.5	>300	N750±500
	30C	30	4.5	—	>300	N750±500
	40C	40	4.5	—	>300	N750±500
	50C	50	4.5	—	>200	N750±500

*Standard Specification = Rated Voltage (VDC) 25
Temperature Range (°C) -40 to +85
Insulation Resistance (MΩ) > 10^4
Torque (g-cm) 10 to 150

HOW TO ORDER

CTZ3 S - 05 A - W 1 - P F

Lead Specification
F = Lead Forming Type (CTZ3 type)

Pin Head Type
P = Plus slot

Taping Quantity (Unit = pcs)
1 = 1,000 2 = 2,000 5 = 5,000

Packaging
B = Bulk
W = W Direction Taping refer to pg. 61
X = X Direction Taping refer to pg. 61

Temperature Coefficient (ppm/°C)
A = NP0±500 B = N400±500
C = N750±500

Maximum Capacitance
03 = 3pF 20 = 20pF 50 = 50pF
05 = 5pF 30 = 30pF
10 = 10pF 40 = 40pF

Type
S = Reflow non-washable type
E = Reflow washable type

Series
CTZ2 = 3.0mmx2.5mmx1.3mm max.
CTZ3 = 4.5mmx3.2mmx1.8mm max.

*No code for standard parts

SERIES	Dimensions	Recommended Land Pattern
CTZ2 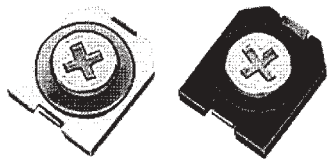	mm (inches) 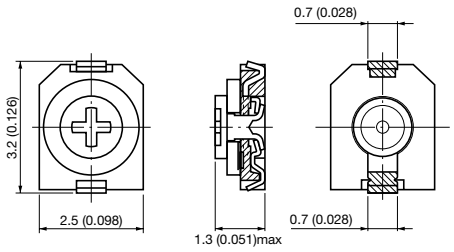	mm (inches) 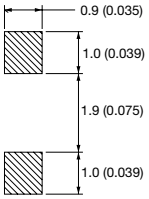
CTZ3 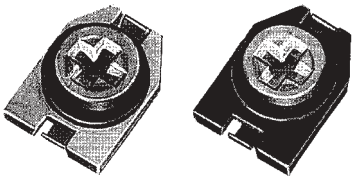	mm (inches) 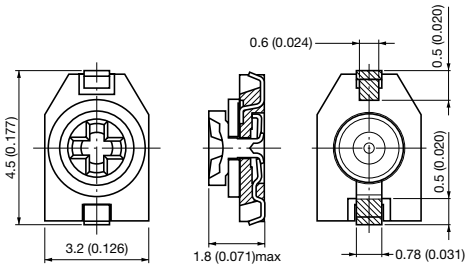	mm (inches) 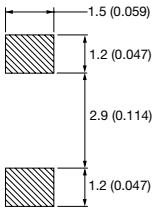

TAPE AND REEL

millimeters (inches)

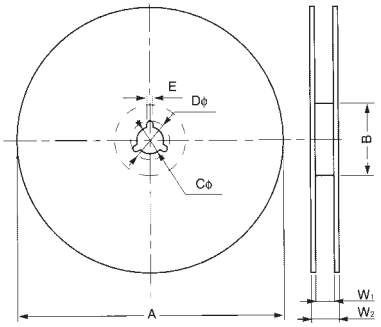

	A	B	C	D	E	W_1	W_2
CTZ2 Series (2,000 pcs) **CTZ3 Series (1,000 pcs)**	$180^{+0.00}_{-3.00}$ $(7.087^{+0.000}_{-0.118})$	$60.0^{+1.00}_{-0.00}$ $(2.362^{+0.000}_{-0.118})$	13.0±0.20 (0.512±0.008)	21.0±0.80 (0.827±0.031)	2.00±0.50 (0.079±0.020)	13.0±0.30 (0.512±0.012)	15.4±1.00 (0.606±0.039)
CTZ3 Series (5,000 pcs)	420±2.00 (16.535±0.079)	80.0±2.00 (3.150±0.079)	13.0±0.50 (0.512±0.020)	21.0±1.00 (0.827±0.039)	2.00±0.50 (0.079±0.020)	14.0±2.00 (0.551±0.079)	16.0±2.50 (0.630±0.098)

CARRIER TAPE

millimeters (inches)

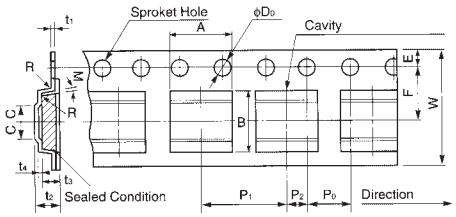

	CTZ2 Series		CTZ3 Series	
Code	**Standard**	**Reverse**	**Standard**	**Reverse**
A	2.70±0.10 (0.106±0.004)	2.90±0.10 (0.114±0.004)	3.35±0.10 (0.132±0.004)	3.60±0.10 (0.142±0.004)
B	3.20±0.10 (0.126±0.004)	4.90±0.10 (0.193±0.004)	$4.60^{+0.20}_{-0.00}$ $(0.181^{+0.008}_{-0.000})$	7.2±0.10 (0.283±0.004)
W	12.0±0.30 (0.472±0.012)	12.0±0.30 (0.472±0.012)	12.0±0.30 (0.472±0.012)	12.0±0.30 (0.472±0.012)
F	5.50±0.05 (0.217±0.002)	5.50±0.05 (0.217±0.002)	5.50±0.05 (0.217±0.002)	5.50±0.05 (0.217±0.002)
E	1.75±0.10 (0.069±0.004)	1.75±0.10 (0.069±0.004)	1.75±0.10 (0.069±0.004)	1.75±0.10 (0.069±0.004)
P0	4.00±0.10 (0.157±0.004)	4.00±0.10 (0.157±0.004)	4.00±0.10 (0.157±0.004)	4.00±0.10 (0.157±0.004)
P1	4.00±0.10 (0.157±0.004)	4.00±0.10 (0.157±0.004)	8.00±0.10 (0.315±0.004)	8.00±0.10 (0.315±0.004)
P2	2.00±0.05 (0.079±0.002)	2.00±0.05 (0.079±0.002)	2.00±0.05 (0.079±0.002)	2.00±0.05 (0.079±0.002)
øD0	$1.50^{+0.10}_{-0.00}$ $(0.059^{+0.004}_{-0.000})$	$1.50^{+0.10}_{-0.00}$ $(0.059^{+0.004}_{-0.000})$	$1.50^{+0.10}_{-0.00}$ $(0.059^{+0.004}_{-0.000})$	$1.50^{+0.10}_{-0.00}$ $(0.059^{+0.004}_{-0.000})$
t1	0.30±0.10 (0.012±0.004)	0.30±0.10 (0.012±0.004)	0.30±0.10 (0.012±0.004)	0.30±0.10 (0.012±0.004)
t2	2.00±0.10 (0.079±0.004)	$1.50^{+0.20}_{-0.00}$ $(0.059^{+0.008}_{-0.000})$	2.50±0.10 (0.098±0.004)	2.20±0.10 (0.087±0.004)
t3	$1.30^{+0.15}_{-0.00}$ $(0.051^{+0.006}_{-0.000})$	$0.80^{+0.10}_{-0.00}$ $(0.031^{+0.004}_{-0.000})$	2.00±0.10 (0.079±0.004)	1.00±0.10 (0.039±0.004)
t4	0.30±0.10 (0.012±0.004)	—	0.30±0.05 (0.012±0.002)	—
C	2.06±0.10 (0.081±0.004)	2.50±0.10 (0.098±0.004)	2.70±0.10 (0.106±0.004)	2.00±0.10 (0.079±0.004)

TAPE LOADING

W Direction – Standard

X Direction – Option

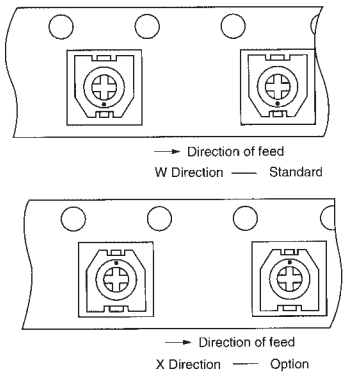

FREQUENCY CHARACTERISTICS

CTZ2-03A-PF

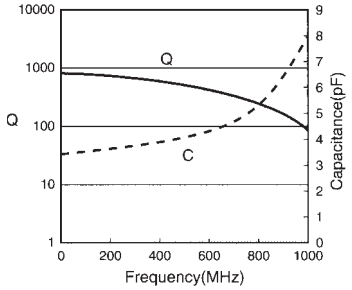

CTZ2-10A-PF

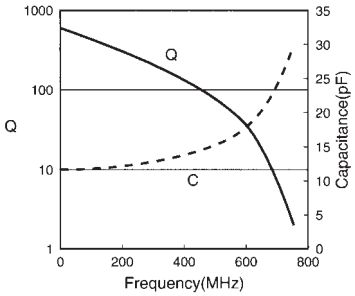

CTZ2-20C-PF

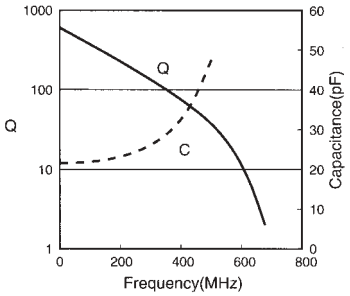

CTZ3-03A-PF

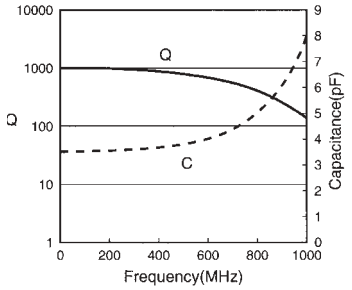

CTZ3-10A-PF

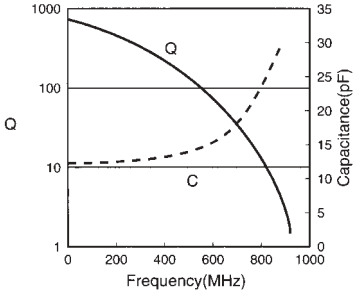

CTZ3-20C-PF

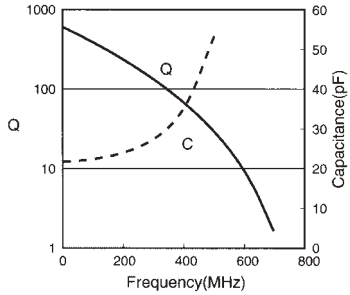

Trimmer Capacitors

TSR, TSW, TSF Series

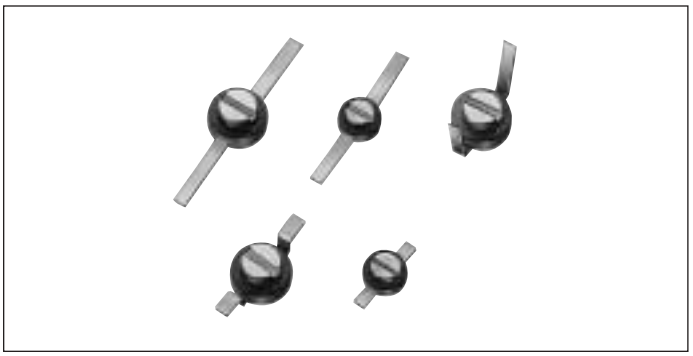

FEATURES

- Ultra small and wide capacitance range
- Small ΔC after alcohol washing
- Better cost performance with Ag plated lead available
- Wide slot type adjustable by using nonconductive trimming driver

APPLICATIONS

- Watch
- Ultra miniature radio
- Telecommunication
- Ultra small video tuner
- Cordless phone
- Pager

DIMENSIONS

3ϕ Type

TSR-3 Type

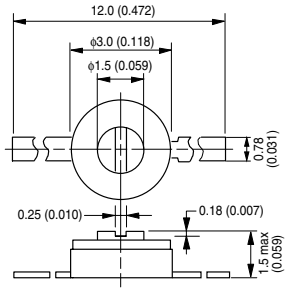

TSW-3 Type

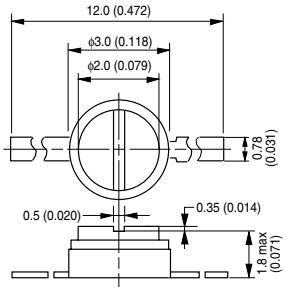

2ϕ Type

TSR-2 Type

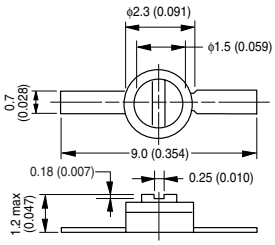

HOW TO ORDER

TSR 3 S - 150 - AU

Lead Forming Type

Thickness Dimensions

120	1.2mm	TSF2 Type
150	1.5mm	TSR3 Type
180	1.8mm	TSW3 Type

Capacitance Range

Diameter Indication
3 = 3ϕ Type 2 = 2ϕ Type

Series
TSR Series
TSF Series
TSW Series

SPECIFICATIONS

Part Number	Capacitance Range Mark	Capacitance Range Mark (pF)	Part Number	Thickness Marking 120	150	180	TC (ppm/°C)	Q Factor (1±0.1MHz)	Slot Dimension
TSR3 TSW3	Z	1 to 3	TSW3	—	—	O	NP0±300	TSR3≥150 TSW3≥200	TSR3 Normal Slot Width = 0.25 Depth = 0.18 TSW3 Wide Slot Width = 0.50 Depth = 0.35
	P	1.5 to 5	TSW3	—	—	O			
	SP	1.5 to 10	TSW3	—	—	O	N400±300		
	H	2.5 to 10	TSW3	—	—	O	NP0±500		
	S3	5.0 to 20	TSR3	—	O	—	N750±500		
			TSW3	—	—	O			
	S2	5.0 to 25	TSR3	—	O	—			
			TSW3	—	—	O			
	S	5.0 to 30	TSR3	—	O	—			
			TSW3	—	—	O			
	□	5.0 to 35	TSR3	—	O	—			
			TSW3	—	—	O			
	L	5.0 to 40	TSR3	—	O	—			
			TSW3	—	—	O			
TSF2	L	5.0 to 20	TSF2	O	—	—	N1200±800	TSF2≥100	TSF2 Normal Slot Width = 0.25, Depth = 0.18
	L2	5.0 to 25							

Trimmer Capacitors

TSR, TSW, TSF Series

LEAD-FORMING TYPE

Series		Dimensions mm (inches)			Configuration
		H	B	L	
Standard Type	TSF2	—	—	9.0±1.0 (0.354±0.039)	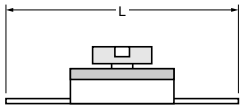
	TSR3	—	—	12.0±1.0 (0.472±0.039)	
	TSW3	—	—	12.0±1.0 (0.472±0.039)	
HB Type	TSF2	0.35±0.2 (0.014±0.008)	2.85±0.3 (0.112±0.012)	4.80±0.3 (0.189±0.012)	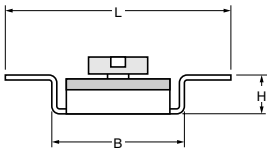
AB Type	TSW3	3.65±0.5 (0.144±0.020)	5.0±0.5 (0.197±0.020)	—	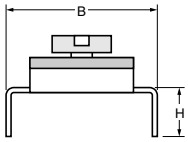
AU Type	TSW3	3.65±0.5 (0.144±0.020)	5.0±0.5 (0.197±0.020)	—	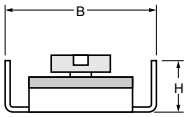

CHARACTERISTICS

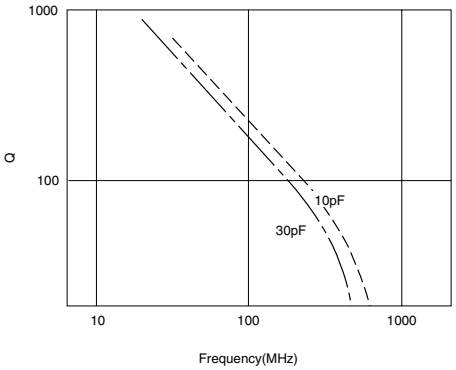

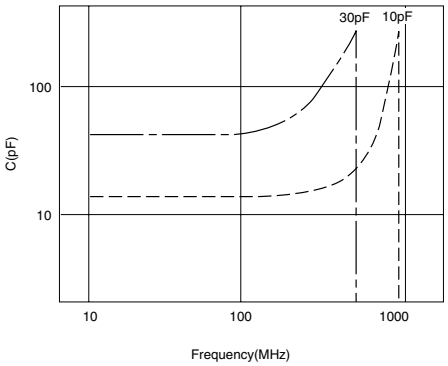

PCB MOUNTING

- Please use mounting hole suitable for lead dimension of trimmer capacitor.
- When our recommended land pattern is not used, please check mounting alignment.
- When mounting on PCB, please do not apply pressure to trimmer capacitors over 500g.f.

SOLDERING

- When using soldering iron, adjust iron tip to 280°C.
- Please find below recommended solder profile.

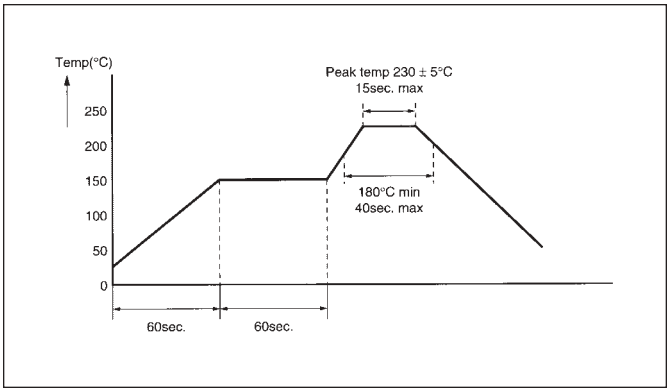

STORAGE CONDITIONS

- Please do not store chlorine and sulfides in same atmosphere.
- Storage life 6 months.

SCREWDRIVERS

Please use proper screwdriver for adjustment of the capacitor. Kyocera can supply suitable ceramic type screwdrivers specially designed for the use of CTZ series. Please contact your local AVX office for the details.

CTZ-3

Pin Head

⊕ = CTZ-3 Plus Ceramic Driver
⊖ = CTZ-3 Minus Ceramic Driver

CTZ-2

Pin Head

⊕ = CTZ-2 Plus Ceramic Driver
⊖ = CTZ-2 Minus Ceramic Driver

millimeters (inches)

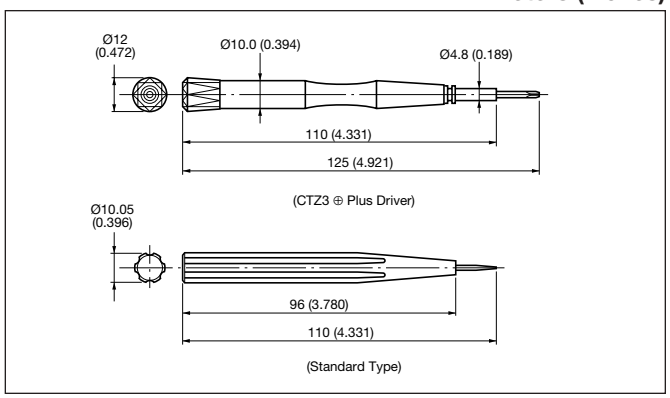

DRIVER HEAD TYPE

millimeters (inches)

CTZ3 Plus

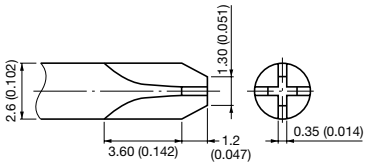

CTZ2 Plus

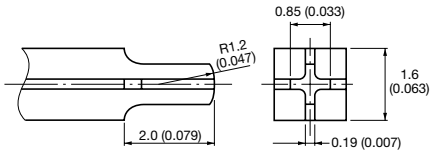

CTZ3 Minus

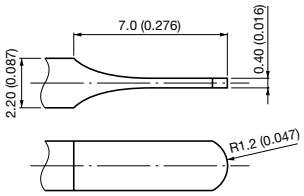

CTZ2 Minus

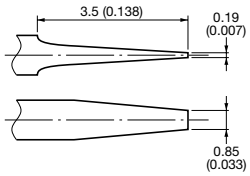

For additional information on these products and continuing updates visit our Website

http://www.avxcorp.com

USA

AVX Myrtle Beach, SC
Corporate Offices
Tel: 843-448-9411
FAX: 843-626-5292

AVX Northwest, WA
Tel: 360-669-8746
FAX: 360-699-8751

AVX North Central, IN
Tel: 317-848-7153
FAX: 317-844-9314

AVX Mid/Pacific, MN
Tel: 952-974-9155
FAX: 952-974-9179

AVX Southwest, AZ
Tel: 480-539-1496
FAX: 480-539-1501

AVX South Central, TX
Tel: 972-669-1223
FAX: 972-669-2090

AVX Southeast, NC
Tel: 919-878-6223
FAX: 919-878-6462

AVX Canada
Tel: 905-564-8959
FAX: 905-564-9728

EUROPE

AVX Limited, England
European Headquarters
Tel: ++44 (0) 1252 770000
FAX: ++44 (0) 1252 770001

AVX S.A., France
Tel: ++33 (1) 69.18.46.00
FAX: ++33 (1) 69.28.73.87

AVX GmbH, Germany - AVX
Tel: ++49 (0) 8131 9004-0
FAX: ++49 (0) 8131 9004-44

AVX GmbH, Germany - Elco
Tel: ++49 (0) 2741 2990
FAX: ++49 (0) 2741 299133

AVX srl, Italy
Tel: ++390 (0)2 614571
FAX: ++390 (0)2 614 2576

AVX Czech Republic, s.r.o.
Tel: ++420 (0)467 558340
FAX: ++420 (0)467 558345

ASIA-PACIFIC

AVX/Kyocera, Singapore
Asia-Pacific Headquarters
Tel: (65) 258-2833
FAX: (65) 350-4880

AVX/Kyocera, Hong Kong
Tel: (852) 2-363-3303
FAX: (852) 2-765-8185

AVX/Kyocera, Korea
Tel: (82) 2-785-6504
FAX: (82) 2-784-5411

AVX/Kyocera, Taiwan
Tel: (886) 2-2696-4636
FAX: (886) 2-2696-4237

AVX/Kyocera, China
Tel: (86) 21-6249-0314-16
FAX: (86) 21-6249-0313

AVX/Kyocera, Malaysia
Tel: (60) 4-228-1190
FAX: (60) 4-228-1196

Elco, Japan
Tel: 045-943-2906/7
FAX: 045-943-2910

Kyocera, Japan - AVX
Tel: (81) 75-604-3426
FAX: (81) 75-604-3425

Kyocera, Japan - KDP
Tel: (81) 75-604-3424
FAX: (81) 75-604-3425

Contact:

A KYOCERA GROUP COMPANY

http://www.avxcorp.com

S-KEC0M0502-C

ООО «ЛайфЭлектроникс» “LifeElectronics” LLC

ИНН 7805602321 КПП 780501001 Р/С 40702810122510004610 ФАКБ "АБСОЛЮТ БАНК" (ЗАО) в г.Санкт-Петербурге К/С 30101810900000000703 БИК 044030703

Компания «Life Electronics» занимается поставками электронных компонентов импортного и отечественного производства от производителей и со складов крупных дистрибьюторов Европы, Америки и Азии.

С конца 2013 года компания активно расширяет линейку поставок компонентов по направлению коаксиальный кабель, кварцевые генераторы и конденсаторы (керамические, пленочные, электролитические), за счёт заключения дистрибьюторских договоров

Мы предлагаем:

- *Конкурентоспособные цены и скидки постоянным клиентам.*
- *Специальные условия для постоянных клиентов.*
- *Подбор аналогов.*
- *Поставку компонентов в любых объемах, удовлетворяющих вашим потребностям.*

- *Приемлемые сроки поставки, возможна ускоренная поставка.*
- *Доставку товара в любую точку России и стран СНГ.*
- *Комплексную поставку.*
- *Работу по проектам и поставку образцов.*
- *Формирование склада под заказчика.*

- *Сертификаты соответствия на поставляемую продукцию (по желанию клиента).*
- *Тестирование поставляемой продукции.*
- *Поставку компонентов, требующих военную и космическую приемку.*
- *Входной контроль качества.*
- *Наличие сертификата ISO.*

В составе нашей компании организован Конструкторский отдел, призванный помогать разработчикам, и инженерам.

Конструкторский отдел помогает осуществить:

- *Регистрацию проекта у производителя компонентов.*
- *Техническую поддержку проекта.*
- *Защиту от снятия компонента с производства.*
- *Оценку стоимости проекта по компонентам.*
- *Изготовление тестовой платы монтаж и пусконаладочные работы.*

Тел: +7 (812) 336 43 04 (многоканальный)
Email: org@lifeelectronics.ru

www.lifeelectronics.ru