DIN 41612

Connectors and Completions

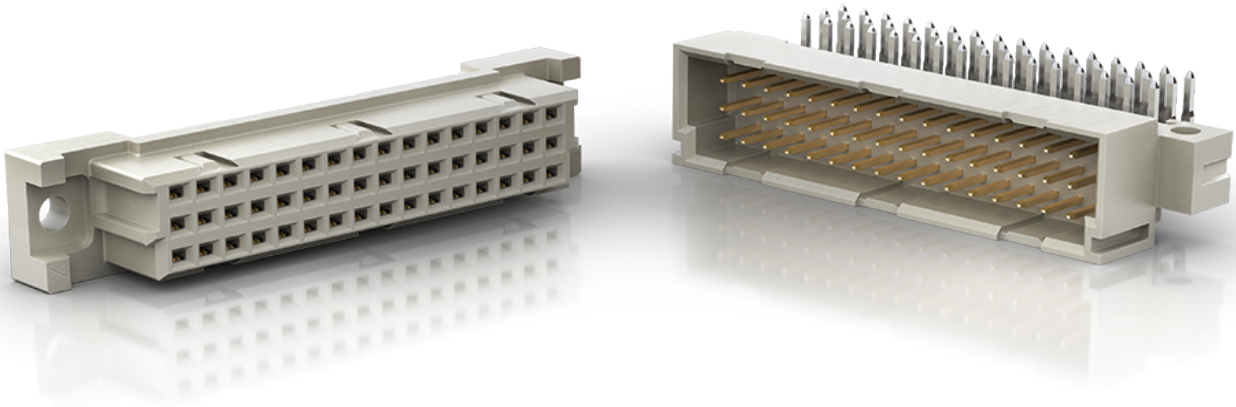

ED. 02 | 10.2009
Catalog E 074558

DIN 41612 / IEC 60603-2 Connectors

Table of Contents

DIN 41612 / IEC 60603-2 Connectors General information . . . 3
Main features . . . 3
Early mate/late break . . . 3
Pre-centering . . . 4
Codings . . . 4
Retentive clip . . . 4
Wiring accessories . . . 5
Terminatinon Technique . . . 5
Basic dimensions for all sizes of the connector family according to DIN 41612/IEC 60603-2 . . . 6
Important dimensions . . . 6
Mounting dimensions of the connectors . . . 7
Clearance and creepage distances . . . 8
Minimum clearance and creepage distances according to IEC 60664 . . . 8
DIN 41612 / 60603-2 Pressfit Connectors ERNIPRESS™ . . . 9
Required specifications of the PCB . . . 9
Insertion and retention forces . . . 9
Hole design . . . 10
Press-in tools . . . 10
Vertical Pressfit Connectors . . . 10
Right Angle Pressfit Connectors . . . 11
Ordering Information Pressfit Connectors . . . 11
Electrical and Mechanical Characteristics . . . 13
Type B Male . . . 21
Type B/2 Male . . . 25
Type B/3 Male . . . 29
Type B Female . . . 33
Type B/2 Female . . . 36
Type B/3 Female . . . 39
Type Q Male . . . 42
Type Q/2 Male . . . 45
Type Q/3 Male . . . 45
Type Q Female . . . 46
Type Q/2 Female . . . 49
Type Q/3 Female . . . 49
Type C Male . . . 50
Type C/2 Male . . . 56
Type C/3 Male . . . 60
Type C Female . . . 63
Type C/2 Female . . . 74
Type C/3 Female . . . 78
Type R Male . . . 81
Type R/2 Male . . . 86
Type R/3 Male . . . 89
Type R Female . . . 92
Type R/2 Female . . . 96
Type R/3 Female . . . 99
Type CD Male . . . 102
Type CD Female . . . 105
Type RD Male . . . 108
Type RD Female . . . 111
Type E 160 / E 80 Male . . . 114
Type E 160 Female . . . 117
Type TE Male . . . 120

Table of Contents

Type TE Female 123
Eurocard Center Connector 126
Type D Male 129
Type D Female 132
Type E Male 136
Type E Female 139
Type F Male 143
Type F Female 145
Type M Male 151
Type M Female 154
Special Contacts for Type M Male and Female 161
Type H11 165
Type H11 Male 168
Type H11 Female 169
Type H15 170
Type H15 Male 173
Type H15 Female 175
Type H7/F24 176
Type H7/F24 Male 179
Type H7/F24 Female 180
Insulation Displacement Connector (IDC) 181
Application example for DIN-IDC connectors 183
Crimp snap-in Connectors (CST) 185
Guide Elements and Shrouds 190
Coding Systems 192
Applications 198
Part Number Index 199

General information

The DIN 41612/IEC 60603-2 connector family consists of 13 basic sizes and many complementary versions.
It was developed for use in 19" rack systems in accordance with **DIN 41494 / IEC 60297.** The large number of different sizes and the efficient connection techniques have made it possible to install these connectors for in extremely wide range of applications.
Typical areas of application:

- Connection between plug-in card and back-panel wiring
- Connection between two PCB's arranged one above the other
- Connection to peripheral equipment with connector housings as accessories
- As periphery connectors for external interfaces from the wiring side

Main features

- Separable printed circuit board connectors
- International approvals, such as UL or CSA
- 13 connector sizes with the same plug-in and mounting conditions
- Additional connector sizes complementing the DIN 41612/IEC 60603-2 such as half or tripled sizes
- Different coding systems available
- Up to 160 contacts per connector
- Two to five row connectors possible
- Various termination types available
- 2.54 mm (0.1") basic pitch
- Early mate/late break contacts available on request
- Wide range of accessories
- Complete interface system available
- All female connectors mentioned in this data sheet have **dual sided female contact spring.**

This contact principle offers a max. security in contacting and remaining contact resistence in extreme situations.

Early mate/late break

For the connectors size B, C, Q, R, D, E and F 0.8 mm early mate/late break male contacts can be loaded in any position in rows a, b, c, d, e and z.
The early mate/late break of the high current connector sizes H11 and H15 have a length of 3.5 mm (1,5 mm on request).
Other lengths of early mate/late break contacts on request.

Mating length

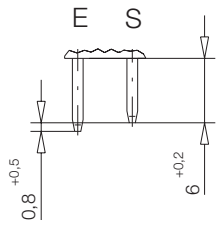

E = early mate, late break

S = standard

Pre-centering

For applications with early mate/late break contacts the male connector insulators with pre-centering ensure even more reliable mating.
The insulators of the female connectors have a recess at the appropriate point. The dimensions of these versions do not conform to the specifications of DIN 41612/IEC 60603-2.
The ordering details are not listed in this data sheet but they can be supplied on request.
Male connectors with pre-centering do not mate with female connectors without a pre-centering recess.

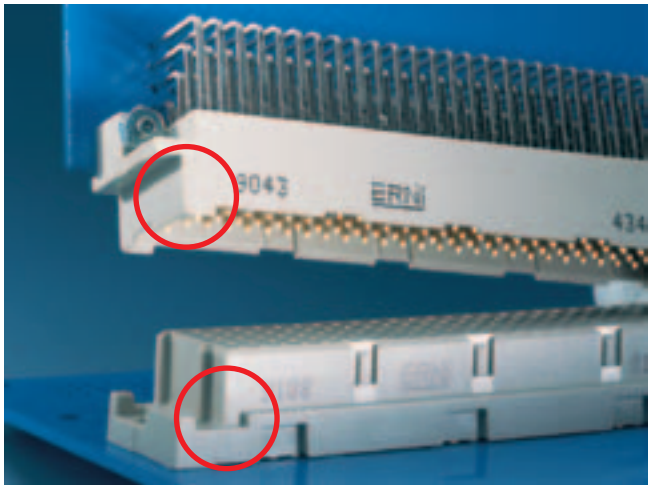

Codings

Various coding systems are available for the connectors contained in this data sheet.

- **Coding with coding strips.** These coding strips are mounted together with the connector. For ERNI coding strips no extra modular space is required in the 19" rack system.
- **Integrated coding with coding wedges.** In this case coding wedges are fitted into the female connectors and the male connectors are provided with corresponding recesses.
- **Integrated coding with coding pins.** In this case coding pins are inserted into the female connectors and holes are drilled in the male connectors in the coding positions.

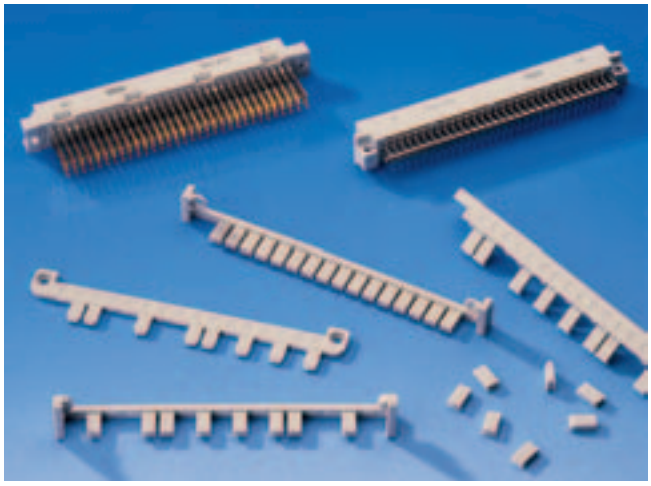

Retentive clip

For efficient mounting of the right angle connectors ERNI offers a retentive clip.
These clips are pre-mounted by ERNI. The connectors are attached to the pc board with this clip, which locks into the drillholes on the pc board, max. thickness of pcb = 1.6 mm.
Since the clips can also be soldered, plated-through holes are recommended in such applications.

Wiring accessories

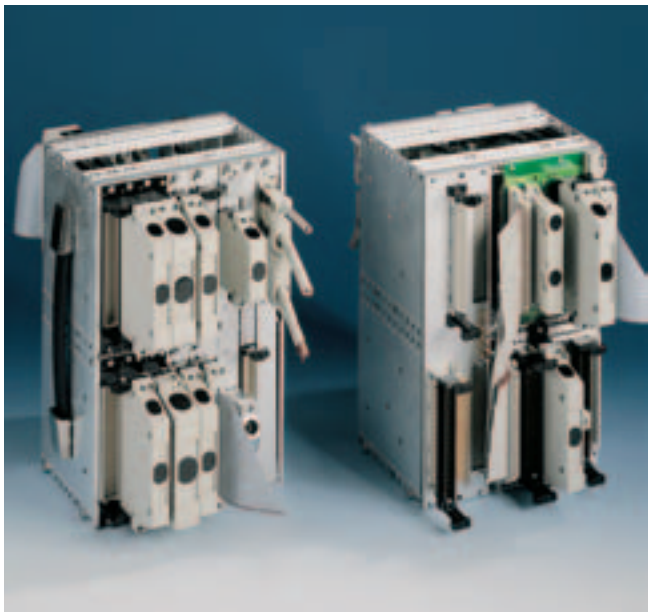

The ERNI connector housing range together with the ERNI interface connector system offers optimum protection for all plug-in interfaces for DIN 41612/IEC 60603-2 connectors. The range is dimensioned for the 19" rack system. Suitable variations are available for nearly every type of connector. Whether you intend to use a short type B/2 connector or a 64-pin insulation displacement connector, the ERNI range offers you the ideal housing.

- **KSG 173** Size: B, C, D, E, M, H11, H15, Q, R, E160, TE160, RD128
- **KSG 193** Size: B/2, C/2, Q/2, R/2
- **KSG 203** Size: F, Fi
- **KSG 253** Size: C (IDC)
- **KSG 204** Size: F, Fi

The connector housings are prepared for a maximum of 3 cable outlets and are offered with strain-relief clamps. A metal-plated version for shielding purposes is also available. For plug-in interfaces on the front or back panel of the rack ERNI has developed guide elements and shrouds in collaboration with well-known customers. These elements permit exact guidance for correct mating and provide robust screw locking. In addition you can fit a coding device.

Termination Technique

Pressfit

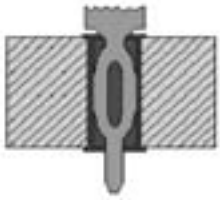

Wire wrap

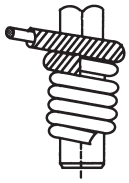

Solder

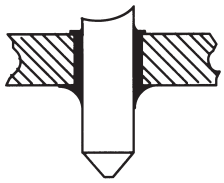

Interface

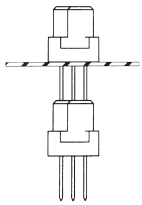

Hand-Solder

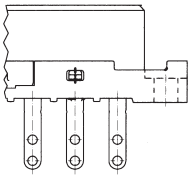

IDC for ribbon cable

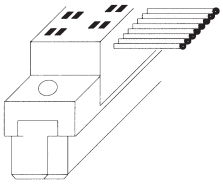

IDC for discrete wires

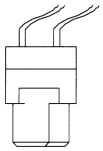

Faston 6.3x0.8

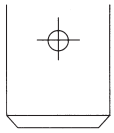

Basic dimensions for all sizes of the connector family according to DIN 41612/IEC 60603-2

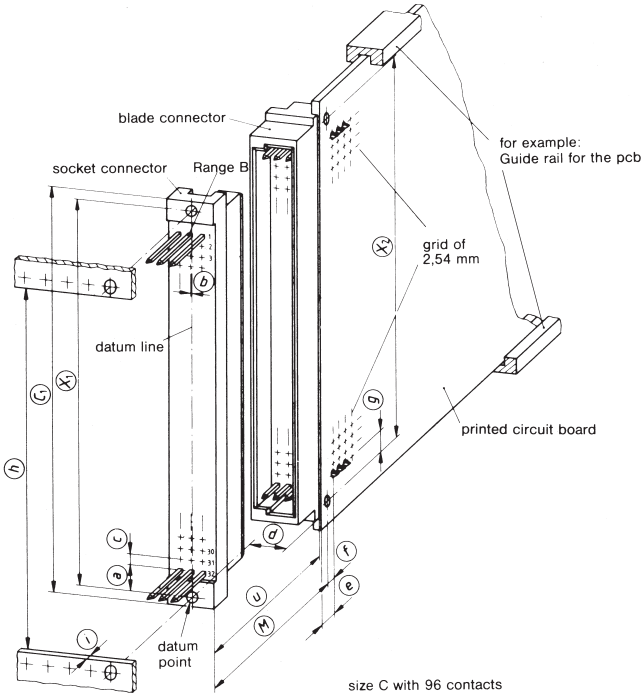

Important dimensions

Letter of dimension	Dimensions mm	Explanation
C_1	95	Maximum length of the connector assigned to the back panel
M	15.5 to 17.3	Mating zone for reliable contact making
X_1	90	Distance between the mounting holes of the connector assigned to the back panel
X_2	88.9	Distance between the mounting holes of the connector assigned to the assembly
a	5.63	Distance between the reference point and centerline through contact no. 32 with regard to the connector assigned to the back panel
b	0.3	Distance between the reference line (line through the fixing holes) and centerline of row b (also called offset)
c	nx2.54	Pitch of the terminals of the connector assigned to the back panel)
d	3.55	Distance between the reference line and the component side of the PCB
e	5.3	Distance between the edge of the PCB and the first row of holes for terminals of the connector mounted on the assembly
f	2.54	Distance between the mounting holes and the first row of holes for terminals of the connector mounted on the assembly
g	5.08	Distance between the mounting holes and the holes for contacts no. 1 and no. 32 of the connector assigned to the assembly
h	85	Minimum length of the panel cutout or minimum distance between the mounting rails for the connector assigned to the back panel
i	2.5	Maximum thickness of mounting plate or mounting rails
u	12.4 to 14.2	Mating zone for reliable contact making

Mounting dimensions of the connectors

in the modular arrangement of the 19" rack system

Exact position of connectors **size C**

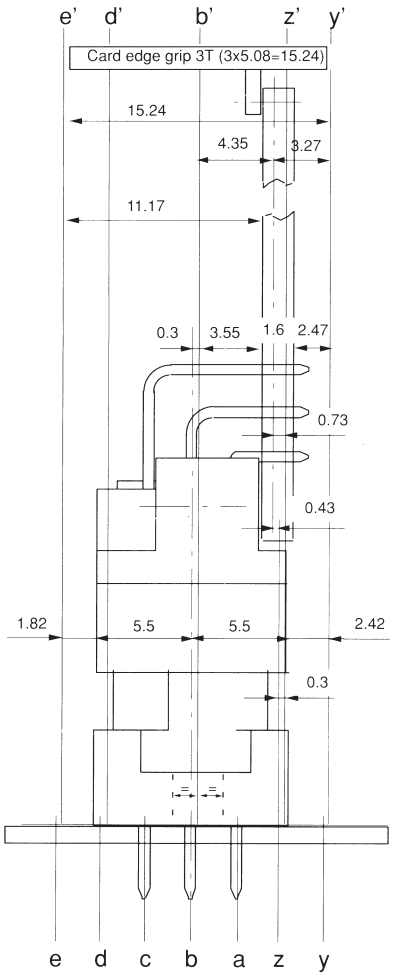

Exact position of connectors **size E**

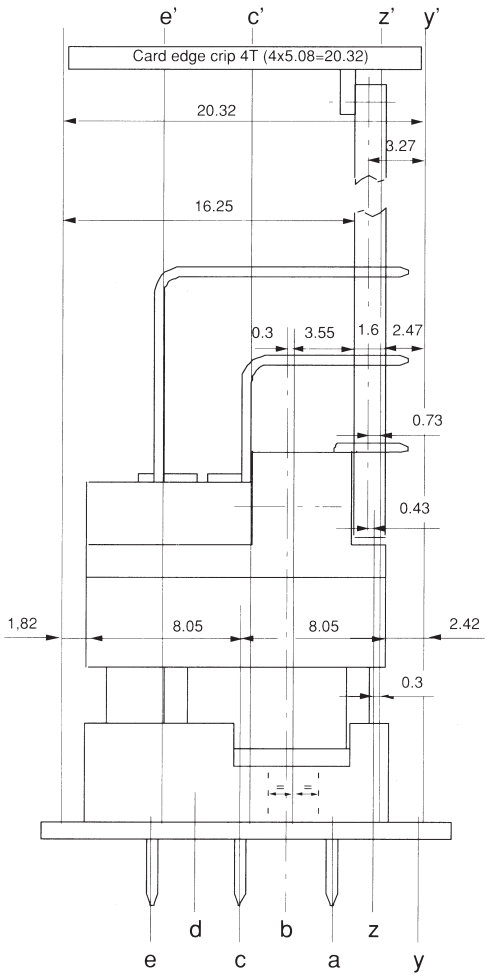

Exact position of connectors **size F**

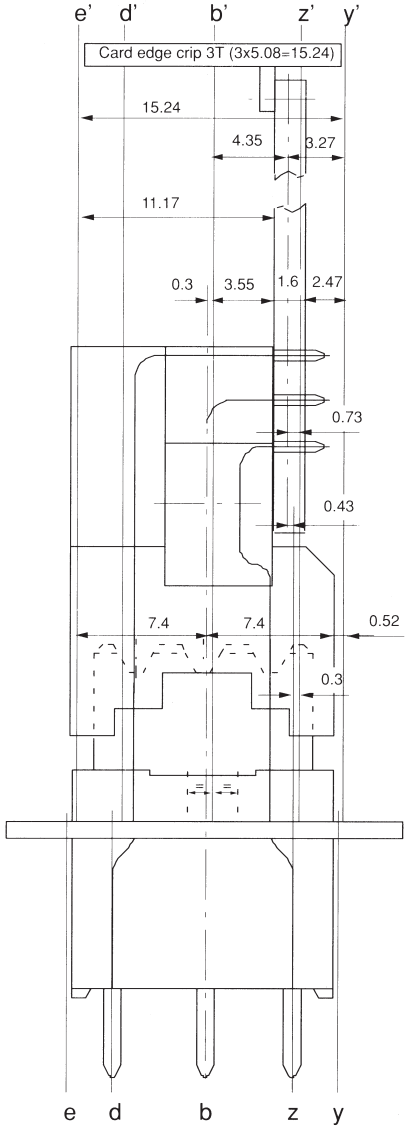

These drawings contain important dimensions for the use of DIN 41612/IEC 60603-2 connectors in 19" rack systems.

The mounting dimensions shown for size F connectors illustrate how the width of 3 x 5.08 mm is maintained by means of a pitch offset between mating side and soldering side. These size F connectors can be used with 3U wide daughter cards in a 3U (3x5.08) 19" slot.

Clearance and creepage distances

for DIN 41612/IEC 60603-2 male and female connectors

Tow different clearance and creepage distances are always distinguished for connectors:

1. The distances a and b are the shortest clearance and creepage distance between assembly rail (chassis) and the closest terminal post.
2. The distances c and d are the shortest clearance and creepage distance between 2 adjacent terminal posts in unwrapped state.

All the values apply to the connectors prior to their termination to the printed circuit board. The influence of the wiring on the clearance creepage distance and must be taken into account.

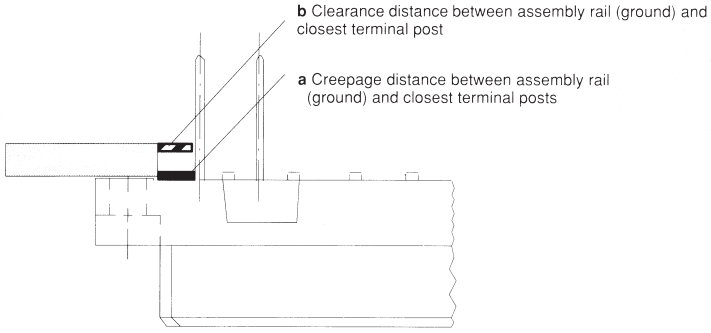

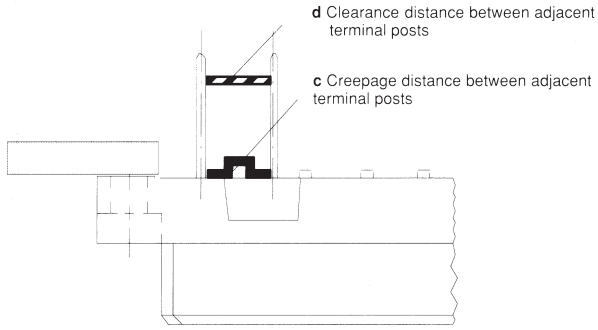

Minimum clearance and creepage distances according to IEC 60664

When calculating the minimum clearance and creepage distance for your application, the guidelines contained in IEC 60664 Parts 1 and 2, January 1989 issue are applicable. This standard contains the relevant values in tabular form.

Calculation of minimum **clearance** distances:
The minimum clearance primarily depends on the following factors:

- Rated impulse voltage for clearance distances (depending on overvoltage category).
- Pollution degree

Calculation of minimum **creepage** distance:
The minimum creepage distance is primarily dependent on the following factors:

- Operating voltage
- Pollution degree
- CTI values (comparative tracking index) of the insulation material
- Contents of insulation body

DIN 41612 / 60603-2 Pressfit Connectors ERNIPRESS™

In electronic and electrical equipment the solderless pressfit technique has become more and more widespread in times of packaging miniaturization and higher packing densities.

ERNI's compliant pressfit zone is a reliable connection between the PC Board and the connector.

ERNI offers a comprehensive pressfit range for all connector types. Also included in the ERNI pressfit range are the right angled pressfit connectors used for daughter card connectors. The pressfit zone is designed that the contact fit in the copper layer of the plated-through hole of a PCB. The tin plating of the hole is penetrated. The result is a reliable gas tight and therefore corsion-free contact with low electrical resistance.

Solderless pressfit connectors are an integral part of today's modern electronic packaging bus systems. The main function of a bus system is to connect assemblies with one another and their power supply. Since plug-in modules are becoming more and more powerful, the demands placed on the bus systems are continually increasing. Higher system speeds and the overall shrinking of the connection structure are making the bus system a more crucial part of the control system.

With newer assembly processes for PC Boards, like the pressfit termination, the mechanism is now available to utilize more powerful electro mechanical components. ERNIPRESS™ solderless pressfit connectors are a perfect fit for such applications. Furthermore, there are many applications where the delicate structure of the PC Board cannot withstand the harshness of automated soldering processes.

For DIN connectors ERNI has two pressfit zones in use. Both zones require exactly the same hole specifications of the PCB.
1. EE-zone contour like a boat

2. EN-zone eye of the needle

Required specifications of the PCB

In manufacturing the PC Board for the pressfit technique it is essential that the recommended DIN PC Board specifications are met. The dimensions of the plated through drillholes and their hole design are described in IEC 60352-5.

The quality and long-term performance of a pressfit connector are influenced by the following factors:

a) Base material of the PCB.
To meet UL requirements, epoxy glass fabric type Hgw 2372.1 to DIN 7735, FR 4, should be used.

b.) Adherence to drillhole tolerances.
For optimum and uniform plating of the PCB, a selective rack technique, flexible anode arrangement and continuous plating bath monitoring are suggested.

c.) Drillhole diameter, positioning and diameter tolerances.
Maintaining the correct roughness of the drillhole wall and restricting drill bit travel are critical production processes.

d.) PCB hole and layout requirements.
A minimal residual ring width of 0.1 mm, finished hole diameter tolerances, layer thicknesses, and a high quality consistent conductive pattern are all critical.

e.) Insertion and retention forces.
Measurement of these forces should be checked.

Insertion and retention forces

The design of the pressfit zone of the ERNIPRESS™ connectors performs a dual function. On the one hand this design has high elasticity and therefore can accomodate large hole tolerances. On the other hand, the pressfit zone's design ensures high edge loading at the copper layer of the PCB hole resulting in a gas-tight, corrosion-free and mechanically secure connection.

Due to the special shape of the pressfit zone, insertion forces are not detrimental to the hole plating.

Retention forces of the contacts in the PCB hole are sufficient to withstand the torques which occur during wire wrap termination. Typical average values for retention force are between 50 – 110 N per contact depending upon PCB thicknesses.

Hole design

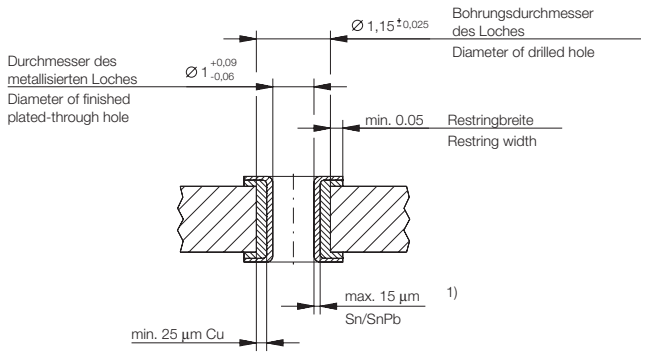

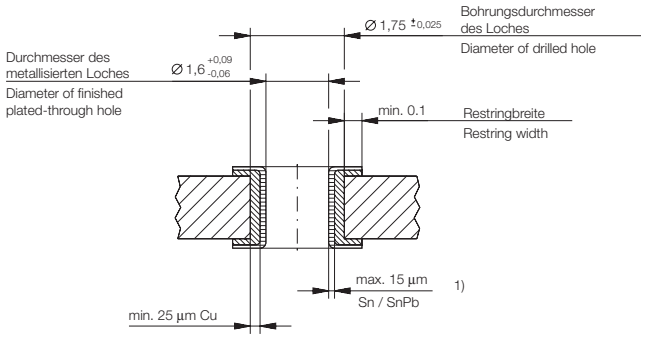

Press-in tools

Vertical Pressfit Connectors

The male and female connectors are assembled into the PC Board in a one-step operation. No additional securing such as with screw hardware is necessary.
Pressfitting of female connector sizes B, B/2, B/3, C, C/2, C/3, M, D, E and F is performed with the aid of a press-in tool which transmits the insertion force to the individual contacts.
For female connector sizes B and C, an additional version is offered which can be pressfitted with just a flat press-in tool. Insertion force is absorbed by the connector housing.
Female connector sizes E 160, H 11 and H 15 are similarly pressfitted with a flat press-in tool.
When pressfitting the inverted male connectors the insertion force is directly loaded on the male contacts.

Right Angle Pressfit Connectors

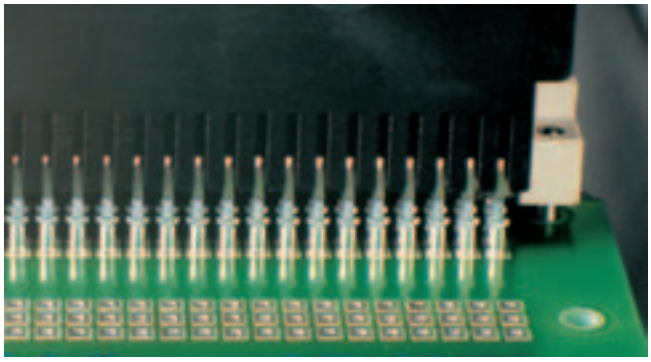

The male connectors and the inverted female connectors have right-angled pressfit terminations with a shoulder.
The appropriate press-in tool with matching cavities, enables the pressfitting of the connectors into the PCB.
The press-in forces are absorbed by the contact shoulder.

Ordering Information

Vertical Female Connectors Type	Contact Supporting Upper Tool Tool Part Number	Flat Upper Tool Part Number	Lower Tool Part Number	Pin Cross Section
B		471787	220108	
B/2		220368	220051	
B/3		220369	220527	
C		471684	471855	
C/2		471791	220051	
C/3		220139	220527	
CD		471837	473447	
E160		471584	473447	
E80		471920	471677	
Eurocard Center Connectors	473449		471943	
D	471590	471684	471855	0.6x0.6
			471694	1x1
E	471591	471584	473447	0.6x0.6
			471694	1x1
F flat			473447	
F	471592	220153	471694	
M 6-10	220894		471867	
M 24-8	220892		471867	
M 42-6	220891		471867	
M 60-4	220890		471867	
M 78-2	220889		471867	
H 11		471684	473161	
H15		471836	471839	

Ordering Information

Vertical Male Connectors Type	Contact Supporting Upper Tool Tool Part Number	Lower Tool Part Number
Q	220370	220108
R	220991	471855
R/2	471597	220051
R/3	220364	220527
RD	471606	473447
TE	471608	473447

Right Angle Male Connectors Type	Contact Supporting Upper Tool Tool Part Number	Flat Upper Tool Part Number	Lower Tool Part Number
B	471630		471729
B/2	471632		471729
B/3	471634		471729
C	471629	220316	471556
C/2	471631		471556
C/3	471633		471556
CD	471922		471793
E160	471628		471710

Right Angle Female Connectors Type	Contact Supporting Upper Tool Tool Part Number	Flat Upper Tool Part Number	Lower Tool Part Number
Q	471640		471729
R		on request	471556
R/2		220411	220681
R/3		230032	471556
RD	471638		471793
TE	471637		471710

Presses

In addition ERNI offers modern hand lever presses with different options. At least insertion forces can be measured and monitored by a IPC supported hand lever press.

DIN 41612 / IEC 60603-2 Connectors

Electrical and Mechanical Characteristics

	Standard	B, B/2, B/3, C, C/2, C/3, Q, Q/2, Q/3, R, R/2, R/3, CD, RD, TE, E80, E160, ECC	M
Number of Pins		20, 30, 32, 48, 64, 80, 96, 128, 160	6, 24, 42, 60, 78
Technical data			
Climate Category	DIN EN 60068-1 test b	55/125/56	55/125/56
Temperature range		-55/125 °C	-55/125 °C
Current rating	IEC60512 test 5b	Ambient temperature 20 °C 2.0 A 70 °C 1.6 A 100 °C 1.0 A	Ambient temperature 20 °C 2.0 A 70 °C 1.6 A 100 °C 1.0 A
Clearance and creepage distance		contact - contact 1.2 mm contact - ground 1.8 mm contact - ground 1.6 mm (clearance)	contact - contact 1.2 mm contact - ground 3.0 mm contact - ground 2.5 mm (clearance)
CTI value	IEC 60112	225 (Standard and THR) 250 (Inverted Versions)	225
Voltage rating	IEC 60664	Has to be determined according to customer application (degree of environmental pollution) according to IEC 60664	Has to be determined according to customer application (degree of environmental pollution) according to IEC 60664
Dielectric strength	IEC 60512	contact - contact 1000 V_{rms} contact - ground 1550 V_{rms}	contact - contact 1000 V_{rms} contact - ground 1550 V_{rms}
Contact resistance	IEC 60512 test 2a	< 20 mΩ	< 20 mΩ
Insulation resistance	IEC 60512 test 3a	> 10^6 MΩ	> 10^6 MΩ
Vibration sine	IEC 60512 test 6d	10 – 2000 Hz 20 g	10 – 2000 Hz 20 g
Contact interruption (while vibration test)	IEC 60512 test 2e	< 1 µs	< 1 µs
Shock halfsine	IEC 60512 test 6c	50 g 11 ms	50 g 11 ms
Contact interruption (while shock test)	IEC 60512 test 2e	< 1 µs	< 1 µs
Mechanical operation (mating cycles)	IEC 60512 test 9a	Class 1: 500 mating cycles Class 2: 400 mating cycles	Class 1: 500 mating cycles Class 2: 400 mating cycles
Insertion and withdrawal force	IEC 60512 test 13b	20 cont.: 18 N max. 30 cont.: 28 N max. 32 cont.: 30 N max. 48 cont.: 45 N max. 64 cont.: 60 N max. 96 cont.: 90 N max. 128 cont.: 100 N max. 160 cont.: 110 N max.	6 cont.: 5 N max. 24 cont.: 22 N max. 42 cont.: 40 N max. 60 cont.: 57 N max. 78 cont.: 74 N max. With special contacts max. 100 N
Gauge retention force per contact	IEC 60512 test 16e	> 0.15 N	> 0.15 N

DIN 41612 / IEC 60603-2 Connectors

Electrical and Mechanical Characteristics

	Standard	B, B/2, B/3, C, C/2, C/3, Q, Q/2, Q/3, R, R/2, R/3, CD, RD, TE, E80, E160, ECC	M
Number of Pins		20, 30, 32, 48, 64, 80, 96, 128, 160	6, 24, 42, 60, 78
Process-conditions			
Solder temperature max.	IEC 68-2-20		
Hand soldering temperature max.		3.5 s at 350 °C	3.5 s at 350 °C
Dip soldering temperature max.		10 s at 260 °C	10 s at 260 °C
Reflow soldering temperature max.		10 s at 260 °C (THR versions)	
Warning		Soldering of pressfit connectors not recommended.	Soldering of pressfit connectors not recommended.
Materials			
Housing: Plastic material (symbol)		PBT GF30 (Standard) PA 10T30GF (THR)	PBT GF30 (Standard)
CTI value	IEC 60112	250 (Standard) 600 (THR)	225
UL flame rating		UL 94 V-0	UL 94 V-0
UL file		E171666	E171666
Contact and mating area			
Base material		Cu alloy	Cu alloy
Plating		Gold plated	Gold plated
Termination area			
Base material		Cu alloy	Cu alloy
Solder, pressfit and THR		Sn	Sn
Environment compatibility			
Recycling		no flame-retardent additives, no toxic additives, allows easy recycling	
Product-approval and customer specific tests			
cUL		E84703	E84703

DIN 41612 / IEC 60603-2 Connectors

Electrical and Mechanical Characteristics

	Standard	D, E	F
Number of Pins		32, 48	32, 48
Technical data			
Climate Category	DIN EN 60068-1 test b	55/125/56	55/125/56
Temperature range		-55/125 °C	-55/125 °C
Current rating	IEC60512 test 5b	Ambient temperature 20 °C 5.5 A 70 °C 4.0 A 100 °C 2.5 A	Ambient temperature 20 °C 5.5 A 70 °C 4.0 A 100 °C 2.5 A
Clearance and creepage distance		contact - contact 3.0 mm (clearance) contact - ground 1.6 mm (clearance) contact - contact 3.0 mm contact - ground 1.8 mm	contact - contact 1.6 mm (clearance) contact - ground 3.5 mm (clearance) contact - contact 3.0 mm contact - ground 6.0 mm
CTI value	IEC 60112	225	175 (Type F) 250 (Type F flat)
Voltage rating	IEC 60664	Has to be determined according to customer application (degree of environmental pollution) according to IEC 60664	Has to be determined according to customer application (degree of environmental pollution) according to IEC 60664
Dielectric strength	IEC 60512	contact - contact 1550 V_{rms} contact - ground 1550 V_{rms}	contact - contact 1550 V_{rms} contact - ground 2500 V_{rms}
Contact resistance	IEC 60512 test 2a	< 15 mΩ	< 15 mΩ
Insulation resistance	IEC 60512 test 3a	> 10^6 MΩ	> 10^6 MΩ
Vibration sine	IEC 60512 test 6d	10 – 2000 Hz 20 g	10 – 2000 Hz 20 g
Contact interruption (while vibration test)	IEC 60512 test 2e	< 1 µs	< 1 µs
Shock halfsine	IEC 60512 test 6c	50 g 11 ms	50 g 11 ms
Contact interruption (while shock test)	IEC 60512 test 2e	< 1 µs	< 1 µs
Mechanical operation (mating cycles)	IEC 60512 test 9a	Class 1: 500 mating cycles Class 2: 400 mating cycles	Class 1: 500 mating cycles Class 2: 400 mating cycles
Insertion and withdrawal force	IEC 60512 test 13b	D: 40 N max. E: 60 N max.	32 cont.: 50 N max. 48 cont.: 75 N max.
Gauge retention force per contact	IEC 60512 test 16e	> 0.15 N	> 0.2 N

DIN 41612 / IEC 60603-2 Connectors

Electrical and Mechanical Characteristics

	Standard	D, E	F
Number of Pins		32, 48	32, 48
Process-conditions			
Solder temperature max.	IEC 68-2-20		
Hand soldering temperature max.		3.5 s at 350 °C	3.5 s at 350 °C
Dip soldering temperature max.		10 s at 260 °C	10 s at 260 °C
Warning		Soldering of pressfit connectors not recommended.	Soldering of pressfit connectors not recommended.
Materials			
Housing: Plastic material (symbol)		PBT GF	PC GF (Type F) PBT GF (Type F flat)
CTI value	IEC 60112	225	175 (Type F) 250 (Type F flat)
UL flame rating		UL 94 V-0	UL 94 V-1(Type F) UL 94 V-0 (Type F flat)
UL file		E47960	E41613 (Type F) E41938 (Type F flat)
Contact and mating area			
Base material		Cu alloy	Cu alloy
Plating		Gold plated	Gold plated
Termination area			
Base material		Cu alloy	Cu alloy
Solder, pressfit and THR		Sn	Sn
Environment compatibility			
Recycling		no flame-retardent additives, no toxic additives, allows easy recycling	
Product-approval and customer specific tests			
cUL		E84703	E84703

DIN 41612 / IEC 60603-2 Connectors

Electrical and Mechanical Characteristics

	Standard	H11	H15, H-F (data only for Contacts)
Number of Pins		11	15, 7/24 (7 Power/24 Signal)
Technical data			
Climate Category	DIN EN 60068-1 test b	55/125/56	55/125/56
Temperature range		-55/125 °C	-55/125 °C
Current rating	IEC60512 test 5b	Ambient temperature 20 °C 15 A 70 °C 11 A 100 °C 7.5 A	Ambient temperature 20 °C 15 A 70 °C 11 A 100 °C 7.5 A
Clearance and creepage distance		contact - contact 4.5 mm (clearance) contact - ground 4.5 mm (clearance) contact - contact 8 mm contact - ground 8 mm	contact - contact 4.5 mm (clearance) contact - ground 4.5 mm (clearance) contact - contact 8 mm contact - ground 8 mm
CTI value	IEC 60112	175	175 225 (H11 solder, pressfit)
Voltage rating	IEC 60664	Has to be determined according to customer application (degree of environmental pollution) according to IEC 60664	Has to be determined according to customer application (degree of environmental pollution) according to IEC 60664
Dielectric strength	IEC 60512	contact - contact 3100 V_{rms} contact - ground 3100 V_{rms}	contact - contact 3100 V_{rms} contact - ground 3100 V_{rms}
Contact resistance	IEC 60512 test 2a	< 8 mΩ	< 8 mΩ
Insulation resistance	IEC 60512 test 3a	> 10^6 MΩ	> 10^6 MΩ
Vibration sine	IEC 60512 test 6d	10 – 2000 Hz 20 g	10 – 2000 Hz 20 g
Contact interruption (while vibration test)	IEC 60512 test 2e	< 1 µs	< 1 µs
Shock halfsine	IEC 60512 test 6c	50 g 11 ms	50 g 11 ms
Contact interruption (while shock test)	IEC 60512 test 2e	< 1 µs	< 1 µs
Mechanical operation (mating cycles)	IEC 60512 test 9a	Class 1: 500 mating cycles	Class 1: 500 mating cycles
Insertion and withdrawal force	IEC 60512 test 13b	max. 80 N	max. 90 N
Gauge retention force per contact	IEC 60512 test 16e	> 0.2 N	> 0.2 N

DIN 41612 / IEC 60603-2 Connectors

Electrical and Mechanical Characteristics

	Standard	H11	H15, H-F (data only for Contacts)
Number of Pins		11	15, 7/24 (7 Power/24 Signal)
Process-conditions			
Solder temperature max.	IEC 68-2-20		
Hand soldering temperature max.		3.5 s at 350 °C	3.5 s at 350 °C
Dip soldering temperature max.		10 s at 260 °C	10 s at 260 °C
Warning		Soldering of pressfit connectors not recommended.	Soldering of pressfit connectors not recommended.
Materials			
Housing: Plastic material (symbol)		PC GF LCP GF (Female Pressfit)	PC GF PBT GF (H11 solder, pressfit)
CTI value	IEC 60112	175	175 225 (H11 solder, pressfit)
UL flame rating		UL 94 V-1 UL 94 V-0 (Female Pressfit)	UL 94 V-1 UL 94 V-0 (H11 solder, pressfit)
UL file		E41613 E83005	E41613 E47960 (H11 solder, pressfit)
Contact and mating area			
Base material		Cu alloy	Cu alloy
Plating		Silver plated	Silver plated
Termination area			
Base material		Cu alloy	Cu alloy
Plating		Sn	Sn
Environment compatibility			
Recycling		no flame-retardent additives, no toxic additives, allows easy recycling	
Product-approval and customer specific tests			
cUL		E84703	E84703

DIN 41612 / IEC 60603-2 Connectors

Electrical and Mechanical Characteristics

	Standard	IDC	Crimp
Number of Pins		64, 96	48, 96, 160
Technical data			
Climate Category	DIN EN 60068-1 test b	55/125/56	55/125/56
Temperature range		-55/125 °C	-55/125 °C
Current rating	IEC60512 test 5b	Ambient temperature 20 °C 2.0 A 70 °C 1.6 A 100 °C 1.0 A	Ambient temperature 20 °C 2.0 A 70 °C 1.6 A 100 °C 1.0 A
Clearance and creepage distance		contact - contact 1.2 mm contact - ground 1.8 mm contact - ground 1.6 mm (clearance)	contact - contact 1.2 mm contact - ground 1.8 mm contact - ground 1.6 mm (clearance)
CTI value	IEC 60112	175 (Type C 96) 225	225 (Type C/2) 250
Voltage rating	IEC 60664	Has to be determined according to customer application (degree of environmental pollution) according to IEC 60664	Has to be determined according to customer application (degree of environmental pollution) according to IEC 60664
Dielectric strength	IEC 60512	contact - contact 1000 V_{rms} contact - ground 1550 V_{rms}	contact - contact 1000 V_{rms} contact - ground 1550 V_{rms}
Contact resistance	IEC 60512 test 2a	< 20 mΩ	< 20 mΩ
Insulation resistance	IEC 60512 test 3a	> 10^6 MΩ	> 10^6 MΩ
Vibration sine	IEC 60512 test 6d	10 – 2000 Hz 20 g	10 – 2000 Hz 20 g
Contact interruption (while vibration test)	IEC 60512 test 2e	< 1 µs	< 1 µs
Shock halfsine	IEC 60512 test 6c	50 g 11 ms	50 g 11 ms
Contact interruption (while shock test)	IEC 60512 test 2e	< 1 µs	< 1 µs
Mechanical operation (mating cycles)	IEC 60512 test 9a	Class 1: 500 mating cycles Class 2: 400 mating cycles	Class 1: 500 mating cycles Class 2: 400 mating cycles
Insertion and withdrawal force	IEC 60512 test 13b	64 cont.: 60 N max. 96 cont.: 90 N max.	48 cont.: 45 N max. 96 cont.: 90 N max. 160 cont.: 110 N max.
Gauge retention force per contact	IEC 60512 test 16e	> 0.15 N	> 0.15 N

Attention

The electrical and thermal variables may be influenced by whichever cable is used.

DIN 41612 / IEC 60603-2 Connectors

Electrical and Mechanical Characteristics

	Standard	IDC	Crimp
Number of Pins		64, 96	48, 96, 160
Process-conditions			
Processing temperature		0/55 °C	0/55 °C
Materials			
Housing: Plastic material (symbol)		PC GF (Type C 96) PBT GF	PBT GF
CTI value	IEC 60112	175 (Type C 96) 225	225 (Type C/2) 250
UL flame rating		UL 94 V-1 (Type C 96) UL 94 V-0	UL 94 V-0
UL file		E41613 (Type C 96) E47960	E47960 (Type C/2) E41938
Contact and mating area			
Base material		Cu alloy	Cu alloy
Plating		Gold plated	Gold plated
Termination area			
Base material		Cu alloy	Cu alloy
Plating		Sn	Sn
Environment compatibility			
Recycling		no flame-retardent additives, no toxic additives, allows easy recycling	
Product-approval and customer specific tests			
cUL		E84703	
Attention			
The electrical and thermal variables may be influenced by whichever cable is used.			

DIN 41612 / IEC 60603-2 Connectors

Type B Male

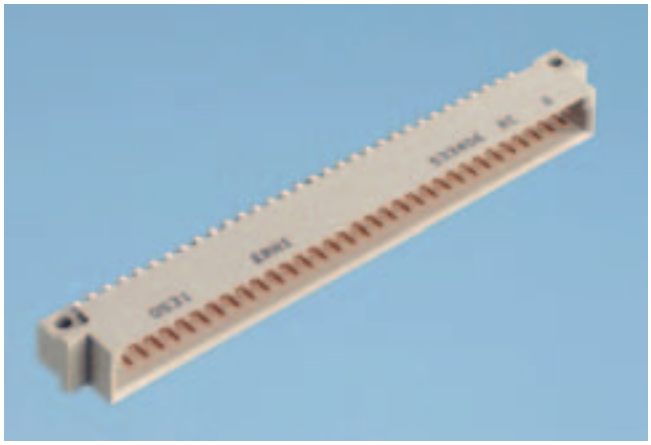

Dimensional Drawing Pressfit

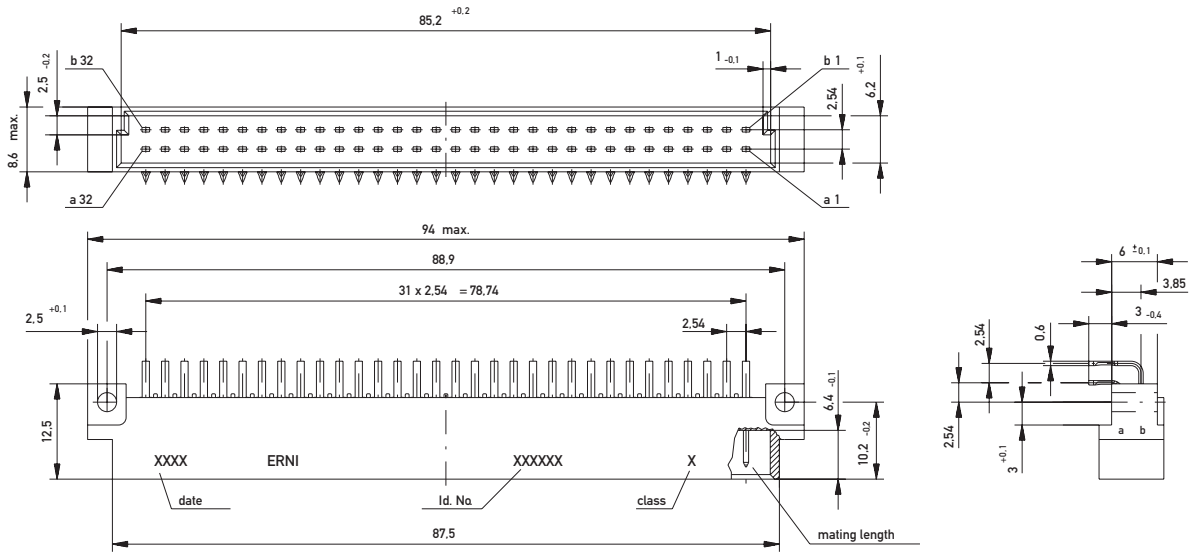

PCB drillhole pattern

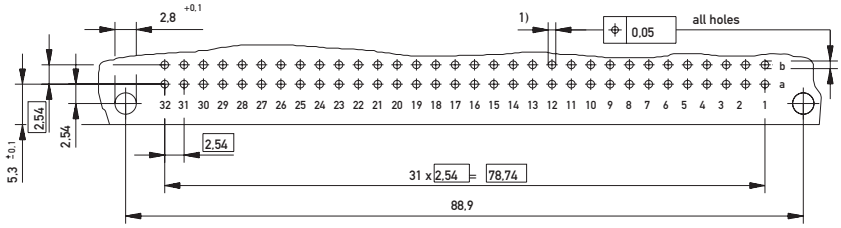

1) ø 1,0 - 0,06 Diameter of finished plated-through hole
ø 1,15 ± 0,025 Diameter of drilled hole

Dimensional Drawing Solder

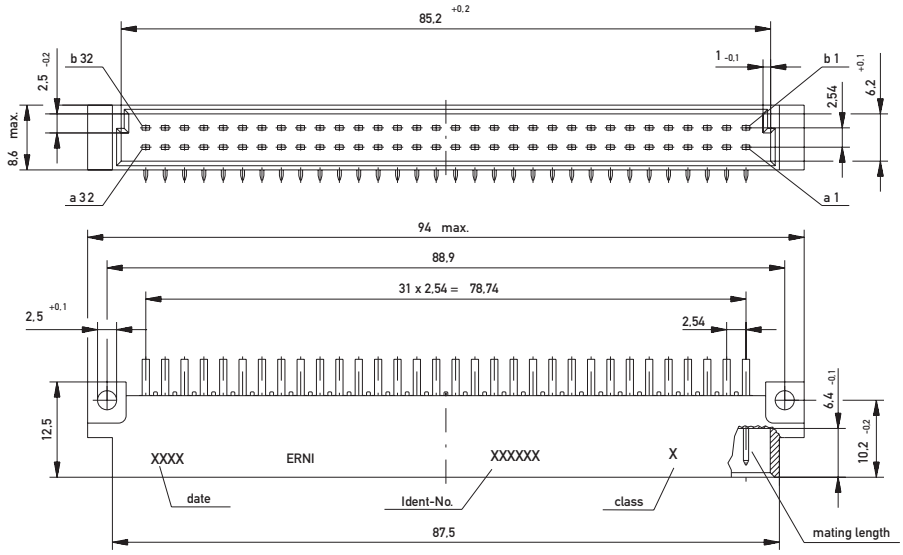

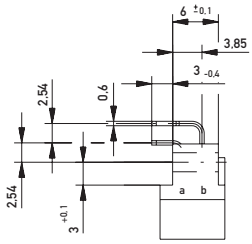

PCB drillhole pattern

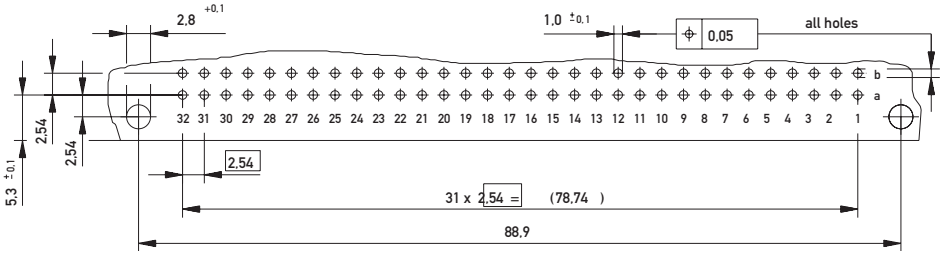

DIN 41612 / IEC 60603-2 Connectors

Type B Male

Ordering Information

No. of Pins	Termination	Term. Length	Pin Dimensions	Class	Pressfit Zone	Part Number
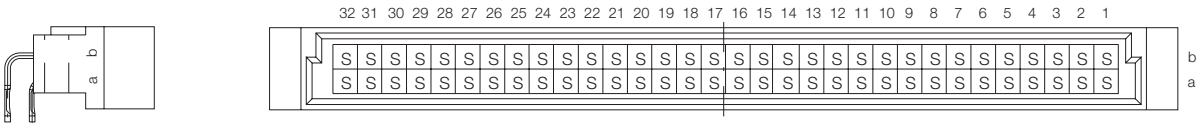						
64	Pressfit	3 mm	0.6 x 0.6 mm	2	1.5 mm	**013130**
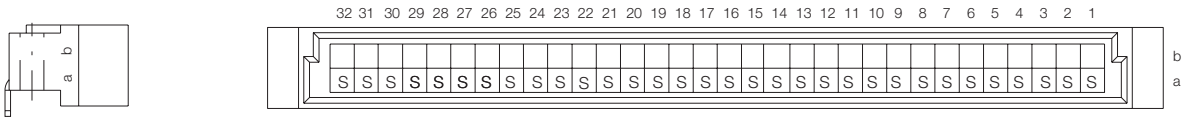						
32	Solder	3 mm	0.6 x 0.6 mm	1	–	**533208**
32	Solder	3 mm	0.6 x 0.6 mm	2	–	**533408**
32	Solder with Clip	3 mm	0.6 x 0.6 mm	2	–	**043606**
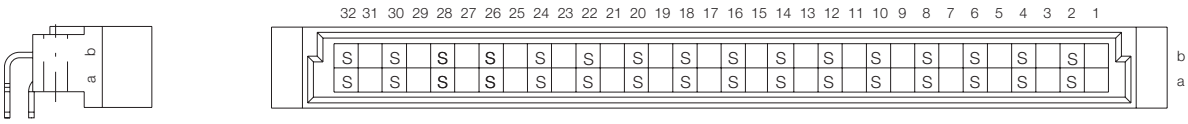						
32	Solder	3 mm	0.6 x 0.6 mm	1	–	**533207**
32	Solder	3 mm	0.6 x 0.6 mm	2	–	**533407**
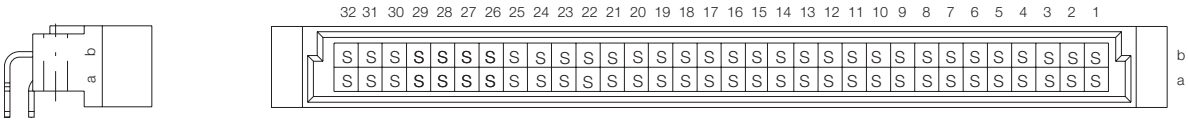						
64	Solder	3 mm	0.6 x 0.6 mm	1	–	**533206**
64	Solder	3 mm	0.6 x 0.6 mm	2	–	**533406**
64	Solder with Clip	3 mm	0.6 x 0.6 mm	2	–	**023545**

DIN 41612 / IEC 60603-2 Connectors

Type B Male

Ordering Information

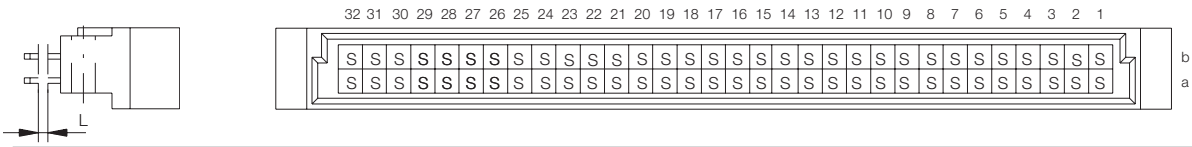

No. of Pins	Termination	Term. Length	Pin Dimensions	Class	Pressfit Zone	Part Number
64	Solder	3.8 mm	0.6 x 0.6 mm	1	–	**414377**
64	Solder	3.8 mm	0.6 x 0.6 mm	2	–	**414378**
64	Solder	12 mm	0.6 x 0.6 mm	1	–	**414379**
64	Solder	12 mm	0.6 x 0.6 mm	2		**414380**

DIN 41612 / IEC 60603-2 Connectors

Type B/2 Male

Dimensional Drawing Pressfit

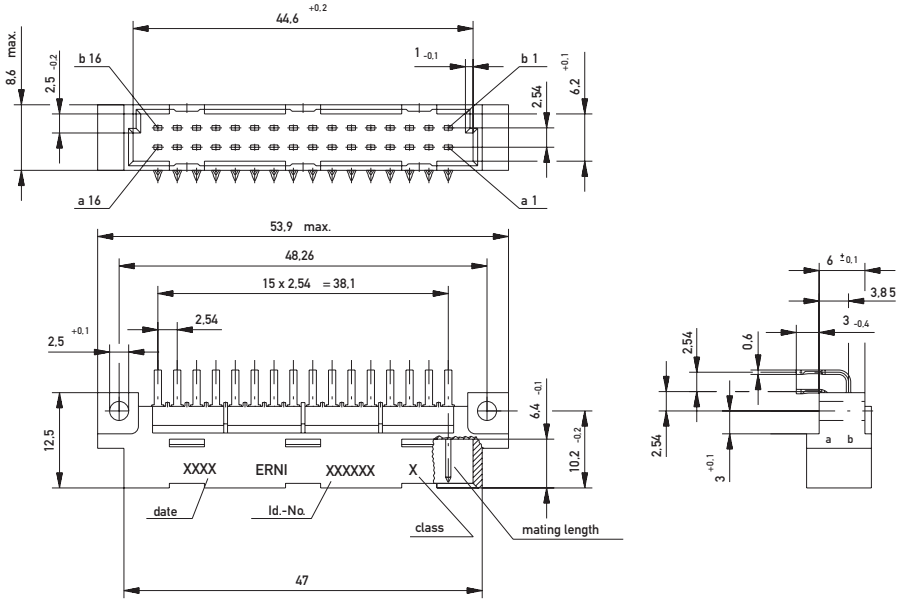

PCB drillhole pattern

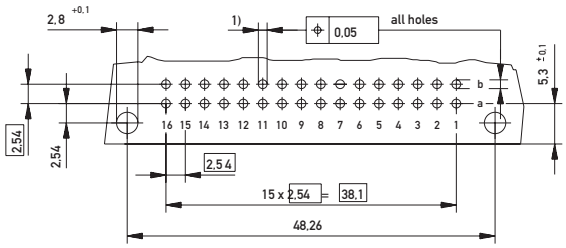

1) ø 1,0 - 0,06 Diameter of finished plated-through hole
ø 1,15 ± 0,025 Diameter of drilled hole

Dimensional Drawing Solder

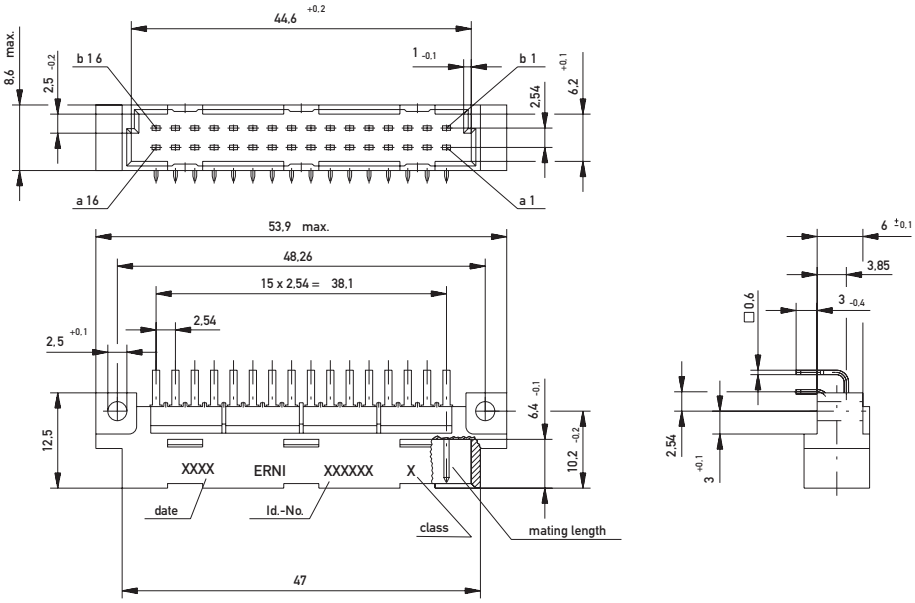

PCB drillhole pattern

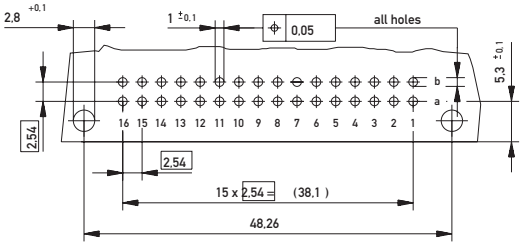

DIN 41612 / IEC 60603-2 Connectors

Type B/2 Male

Ordering Information

No. of Pins	Termination	Term. Length	Pin Dimensions	Class	Pressfit Zone	Part Number
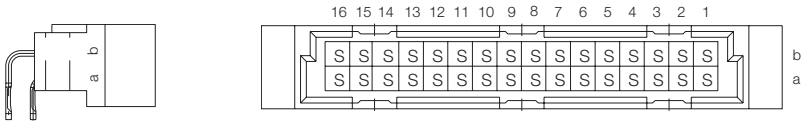						
32	Pressfit	3 mm	0.6 x 0.6 mm	2	1.5 mm	**013135**
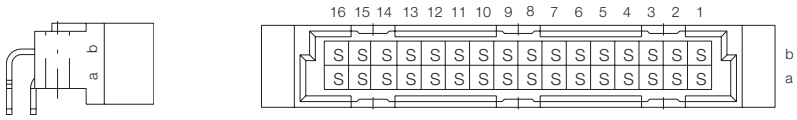						
32	Solder	3 mm	0.6 x 0.6 mm	1	–	**413852**
32	Solder	3 mm	0.6 x 0.6 mm	2	–	**413853**
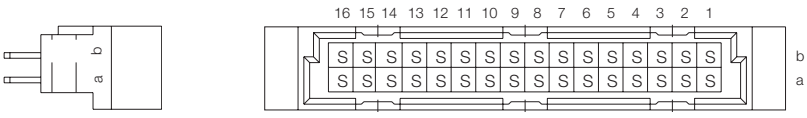						
32	Solder	3.8 mm	0.6 x 0.6 mm	1	–	**594056**
32	Solder	3.8 mm	0.6 x 0.6 mm	2	–	**594613**
32	Solder	12 mm	0.6 x 0.6 mm	2	–	**594614**

DIN 41612 / IEC 60603-2 Connectors

Type B/3 Male

Dimensional Drawing Pressfit

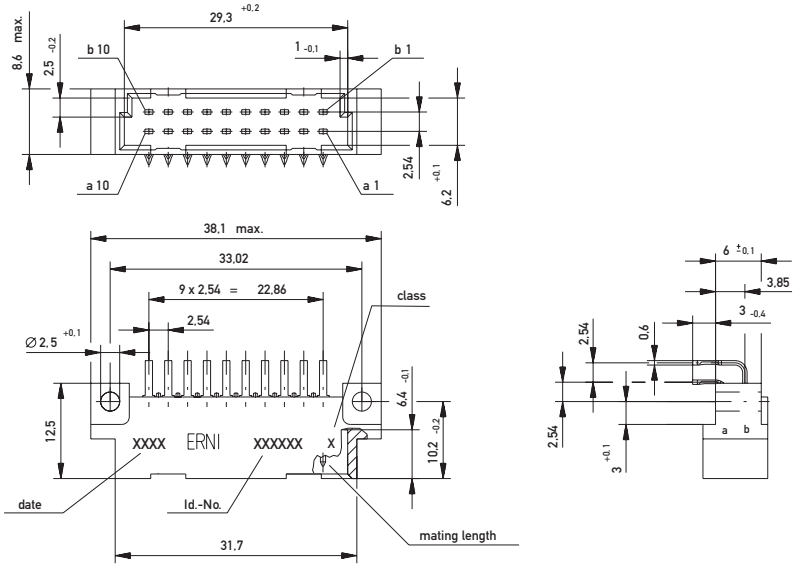

PCB drillhole pattern

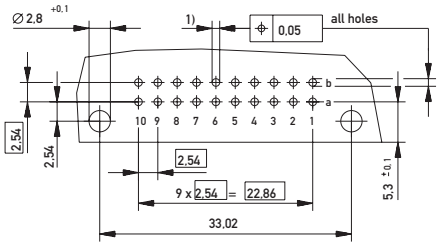

1) ø 1,0 $^{+0,09}_{-0,06}$ Diameter of finished plated-through hole
ø 1,15 ±0,025 Diameter of drilled hole

Dimensional Drawing Solder

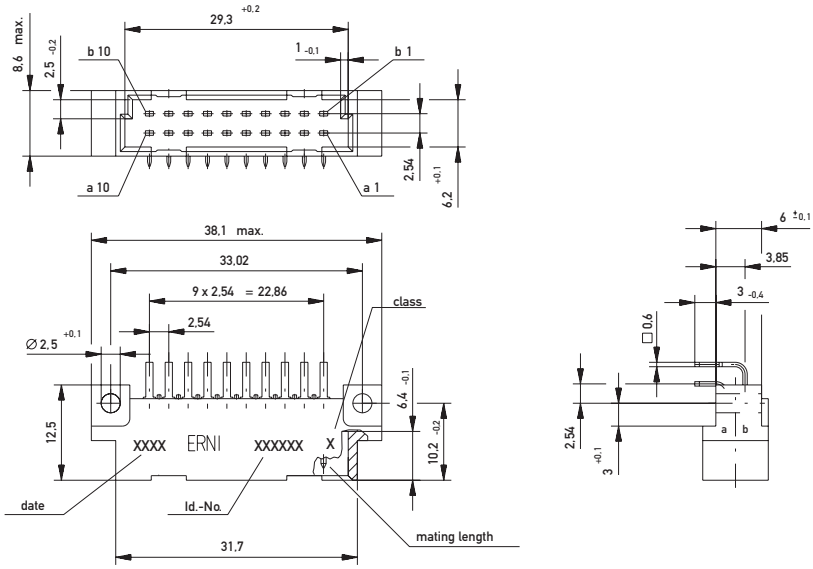

PCB drillhole pattern

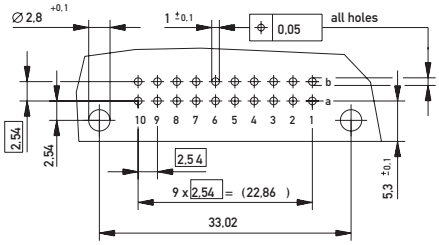

DIN 41612 / IEC 60603-2 Connectors

Type B/3 Male

Ordering Information

No. of Pins	Termination	Term. Length	Pin Dimensions	Class	Pressfit Zone	Part Number
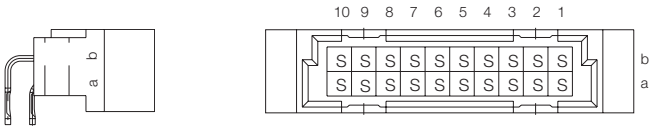						
20	Pressfit	3 mm	0.6 x 0.6 mm	2	1.5 mm	**013133**
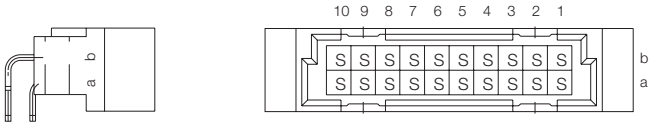						
20	Solder	3 mm	0.6 x 0.6 mm	2	–	**424207**

DIN 41612 / IEC 60603-2 Connectors

Type B Female

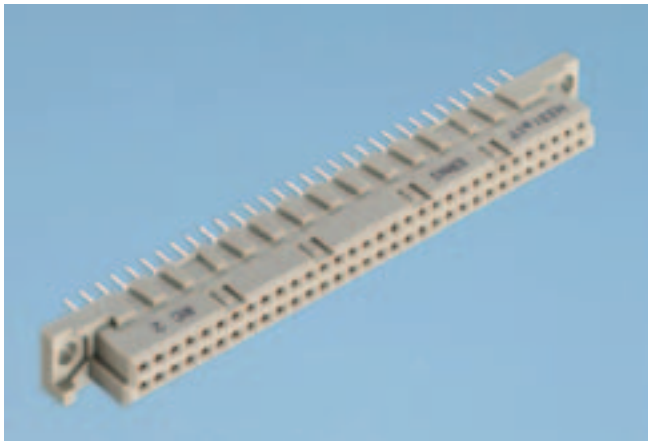

Dimensional Drawing Pressfit

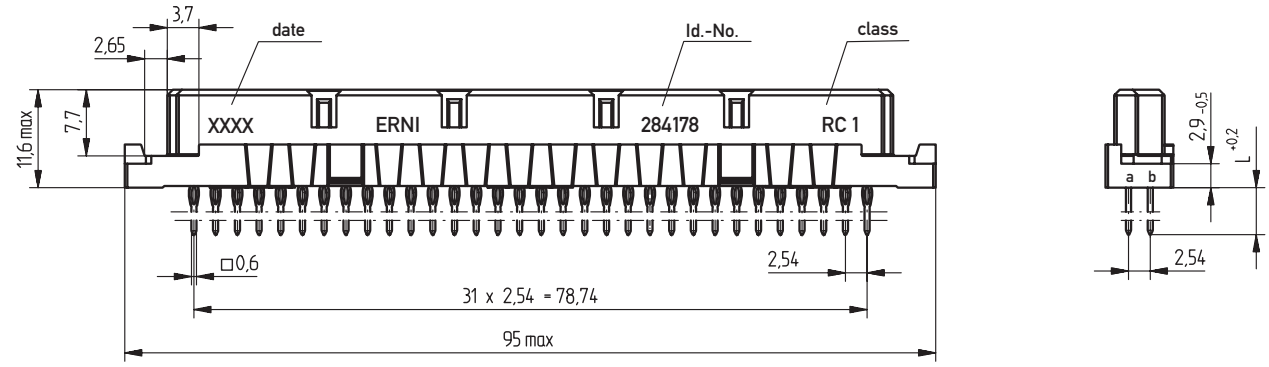

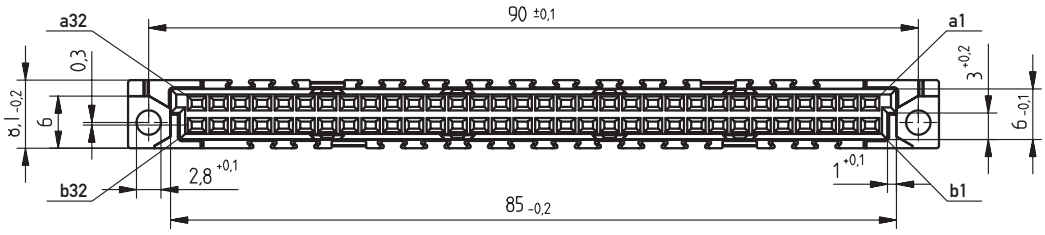

PCB drillhole pattern

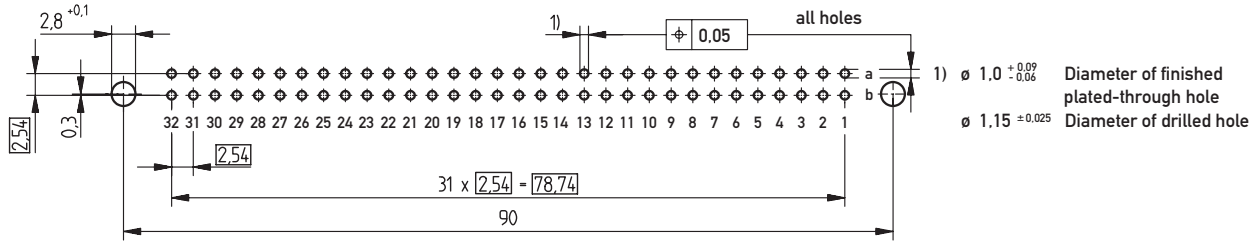

Dimensional Drawing Solder

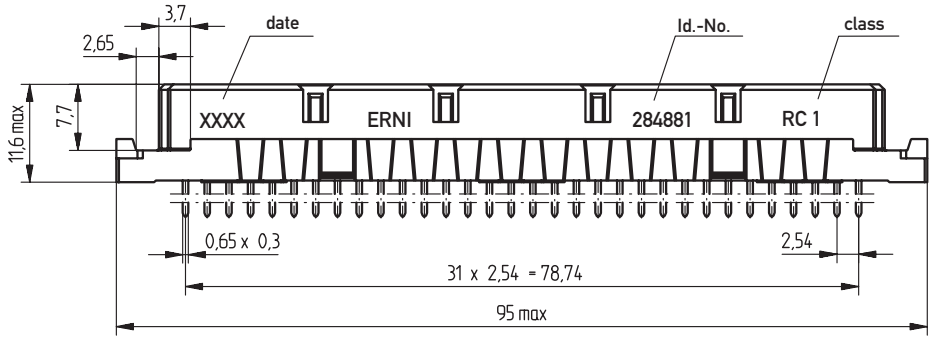

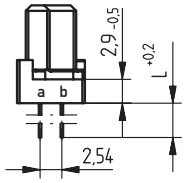

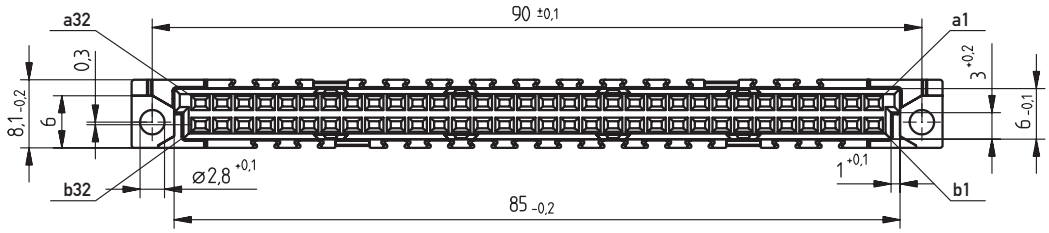

PCB drillhole pattern

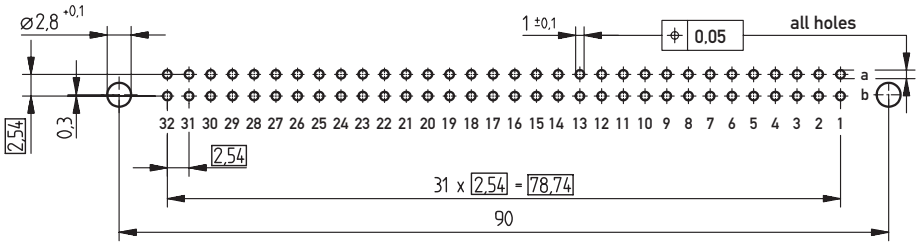

DIN 41612 / IEC 60603-2 Connectors

Type B Female

Ordering Information

No. of Pins	Termination	Term. Length	Pin Dimensions	Class	Pressfit Zone	Part Number
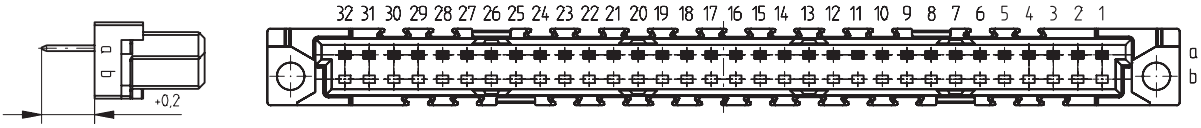						
32	Pressfit	5.5 mm	0.6 x 0.6 mm	2	2.5 mm	**254848**
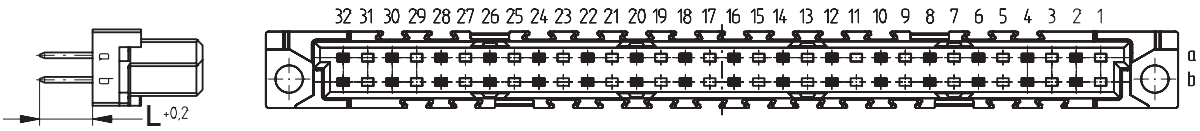						
32	Pressfit	5.5 mm	0.6 x 0.6 mm	2	2.5 mm	**254847**
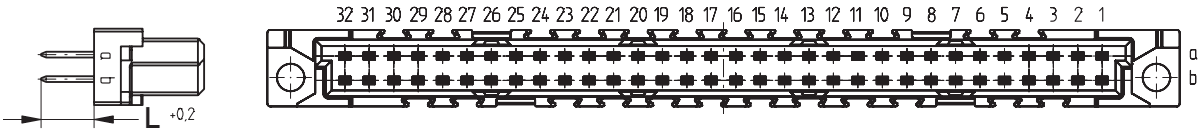						
64	Pressfit	5.5 mm	0.6 x 0.6 mm	2	2.5 mm	**254846**
64	Pressfit	5.5 mm	0.6 x 0.6 mm	1	2.5 mm	**284178**
64	Pressfit w/o Flange	5.5 mm	0.6 x 0.6 mm	2	2.5 mm	**254878**
64	Pressfit w. Transfer Zone	13 mm	0.6 x 0.6 mm	2	3 mm	**254976**
64	Pressfit	17 mm	0.6 x 0.6 mm	2	2.5 mm	**284177**
64	Pressfit w. Transfer Zone	17 mm	0.6 x 0.6 mm	2	2.5 mm	**284179**

Ordering Information

No. of Pins	Termination	Term. Length	Pin Dimensions	Class	Pressfit Zone	Part Number
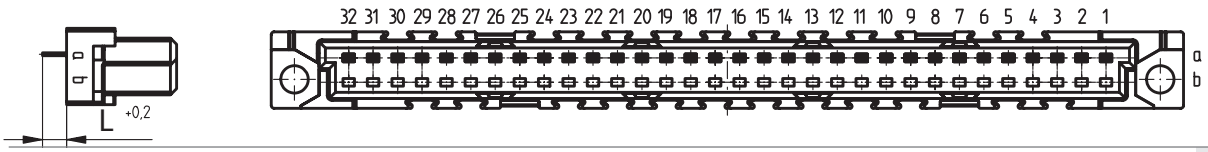						
32	Solder	2.5 mm	0.65 x 0.3 mm	2	–	**284873**
32	Solder	4 mm	0.65 x 0.3 mm	1	–	**284874**
32	Solder	4 mm	0.65 x 0.3 mm	2	–	**284651**
32	Solder	13 mm	0.6 x 0.6 mm	1	–	**284870**
32	Solder	13 mm	0.6 x 0.6 mm	2	–	**284871**
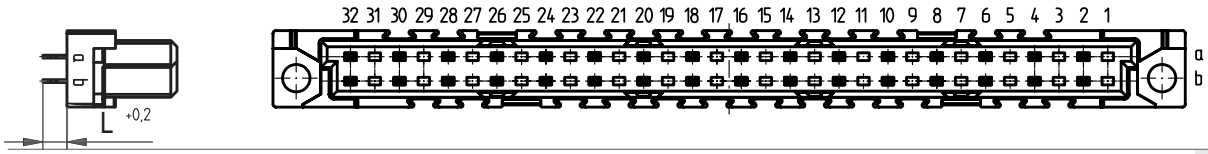						
32	Solder	2.5 mm	0.65 x 0.3 mm	2	–	**284875**
32	Solder	4 mm	0.65 x 0.3 mm	2	–	**284164**
32	Solder	13 mm	0.6 x 0.6 mm	1	–	**294694**

DIN 41612 / IEC 60603-2 Connectors

Type B Female

Ordering Information

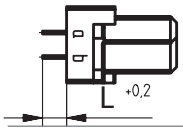

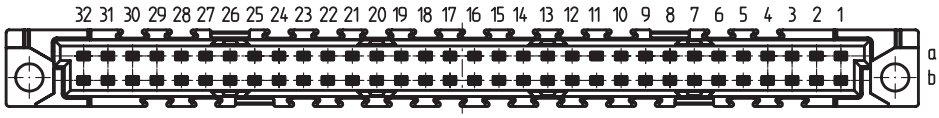

No. of Pins	Termination	Term. Length	Pin Dimensions	Class	Pressfit Zone	Part Number
64	Solder	2.5 mm	0.65 x 0.3 mm	1	–	**284883**
64	Solder	2.5 mm	0.65 x 0.3 mm	2	–	**284650**
64	Solder with Clip	2.5 mm	0.65 x 0.3 mm	2	–	**284882**
64	Solder	4 mm	0.65 x 0.3 mm	1	–	**284881**
64	Solder	4 mm	0.65 x 0.3 mm	2	–	**284166**
64	Solder with Clip	4 mm	0.65 x 0.3 mm	2	–	**284880**
64	Solder	13 mm	0.6 x 0.6 mm	1	–	**284876**
64	Solder	13 mm	0.6 x 0.6 mm	2	–	**284165**
64	Solder w. Transfer Zone	17 mm	0.6 x 0.6 mm	2	–	**284878**
64	Solder w. Transfer Zone	13 mm	0.6 x 0.6 mm	2	–	**284877**

DIN 41612 / IEC 60603-2 Connectors

Type B/2 Female

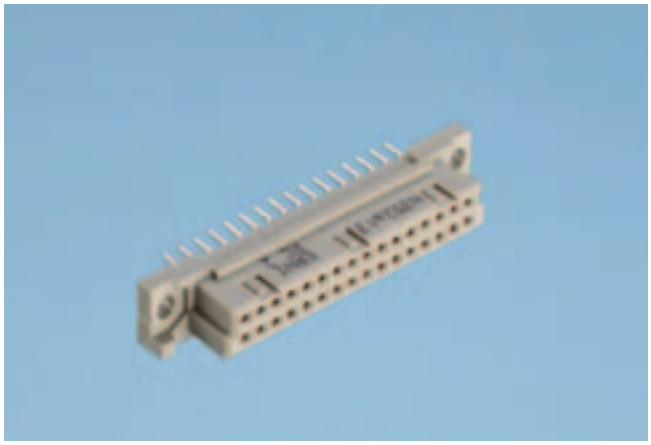

Dimensional Drawing Pressfit

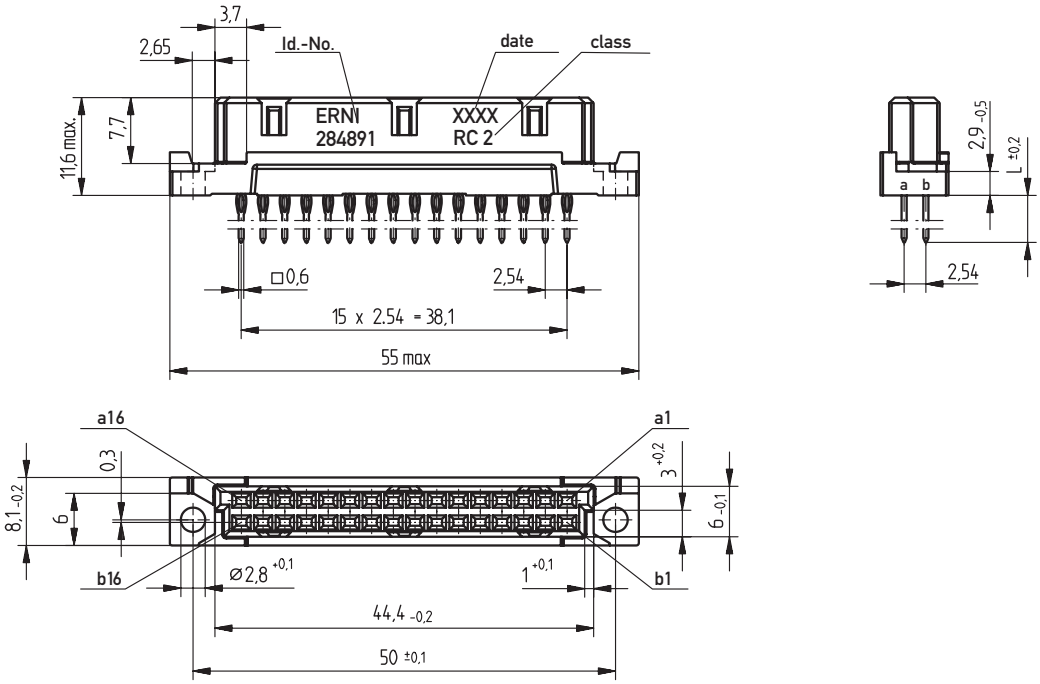

PCB drillhole pattern

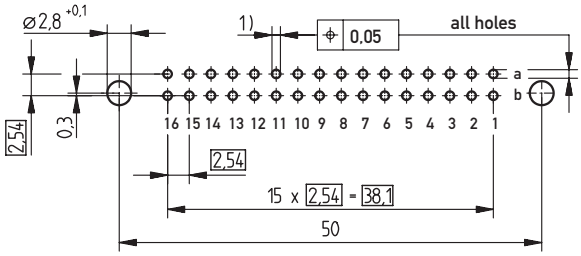

1) ø 1,0 $^{+0,09}_{-0,06}$ Diameter of finished plated-through hole
ø 1,15 $^{\pm 0,025}$ Diameter of drilled hole

Dimensional Drawing Solder

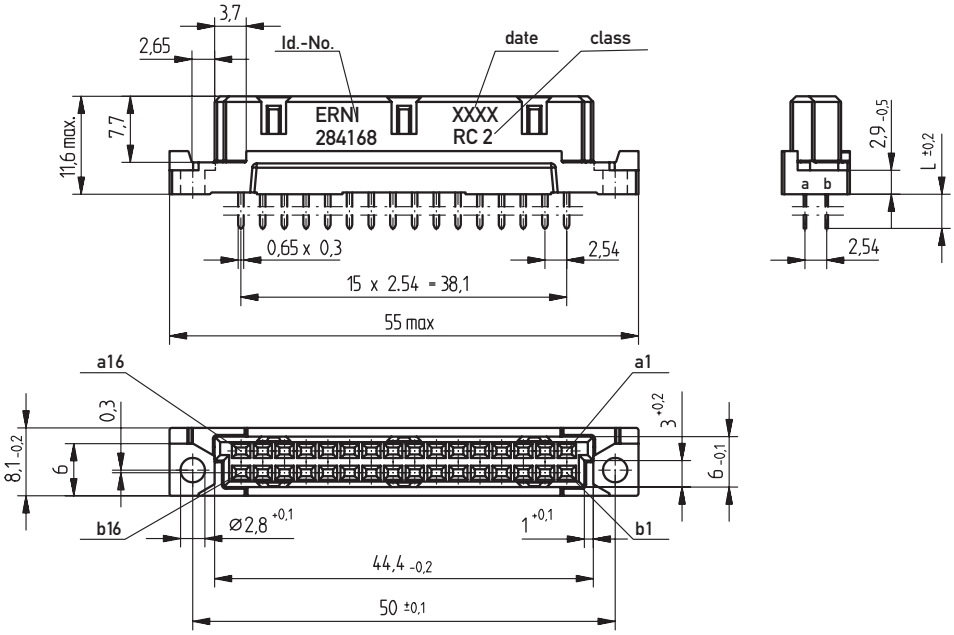

PCB drillhole pattern

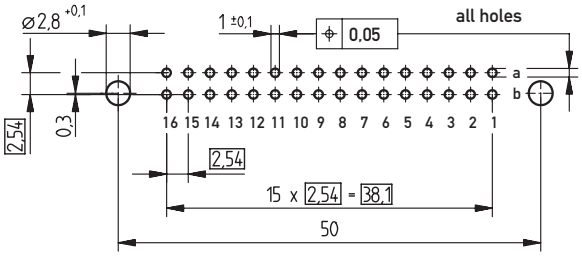

DIN 41612 / IEC 60603-2 Connectors

Type B/2 Female

Ordering Information

No. of Pins	Termination	Term. Length	Pin Dimensions	Class	Pressfit Zone	Part Number
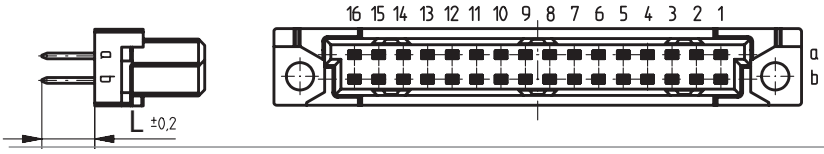						
32	Pressfit	5.5 mm	0.6 x 0.6 mm	2	3 mm	**284891**
32	Pressfit w. Transfer Zone	13 mm	0.6 x 0.6 mm	2	3 mm	**284319**
32	Pressfit w. Transfer Zone	17 mm	0.6 x 0.6 mm	2	3 mm	**284895**
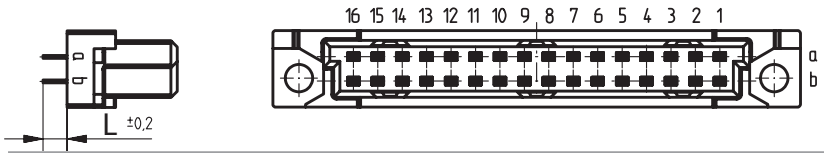						
32	Solder	2.5 mm	0.65 x 0.3 mm	2	–	**284886**
32	Solder	4 mm	0.65 x 0.3 mm	1	–	**284888**
32	Solder	4 mm	0.65 x 0.3 mm	2	–	**284168**
32	Solder	13 mm	0.6 x 0.6 mm	1	–	**284889**
32	Solder	13 mm	0.6 x 0.6 mm	2	–	**284167**

DIN 41612 / IEC 60603-2 Connectors

Type B/3 Female

Dimensional Drawing Pressfit

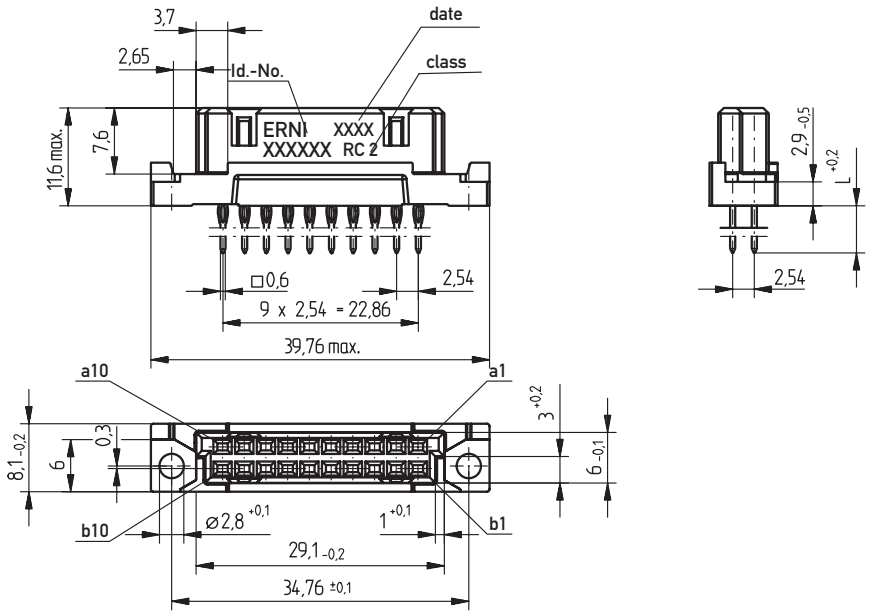

PCB drillhole pattern

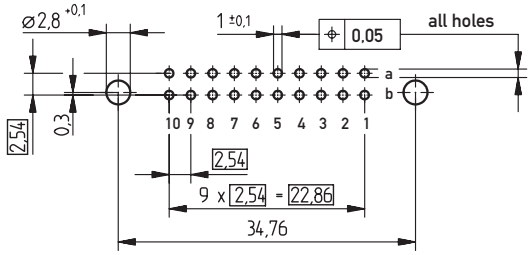

1) ø 1,0 $^{+0,09}_{-0,06}$ Diameter of finished plated-through hole
ø 1,15 ±0,025 Diameter of drilled hole

Dimensional Drawing Solder

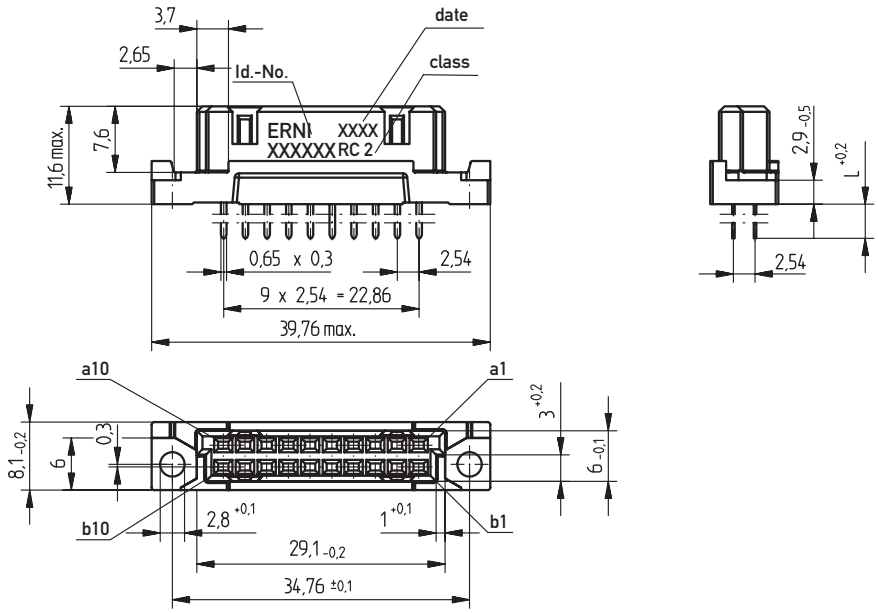

PCB drillhole pattern

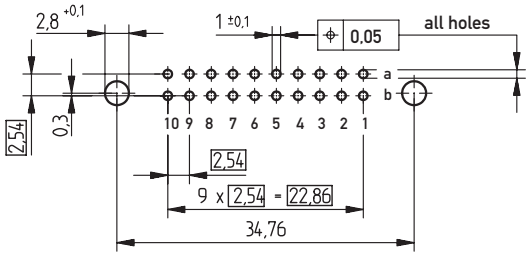

DIN 41612 / IEC 60603-2 Connectors

Type B/3 Female

Ordering Information

No. of Pins	Termination	Term. Length	Pin Dimensions	Class	Pressfit Zone	Part Number
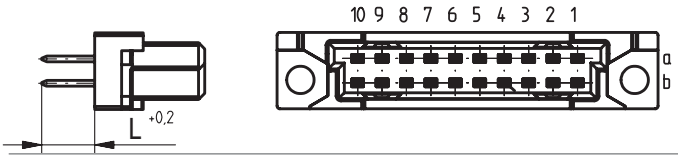						
20	Pressfit	5.5 mm	0.6 x 0.6 mm	2	3 mm	**284418**
20	Pressfit	17 mm	0.6 x 0.6 mm	2	3 mm	**284896**
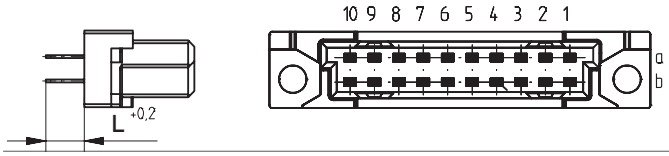						
20	Solder	4 mm	0.65 x 0.3 mm	2	–	**254370**
20	Solder	13 mm	0.6 x 0.6 mm	2	–	**284169**

DIN 41612 / IEC 60603-2 Connectors

Type Q Male

Dimensional Drawing Pressfit Type Q

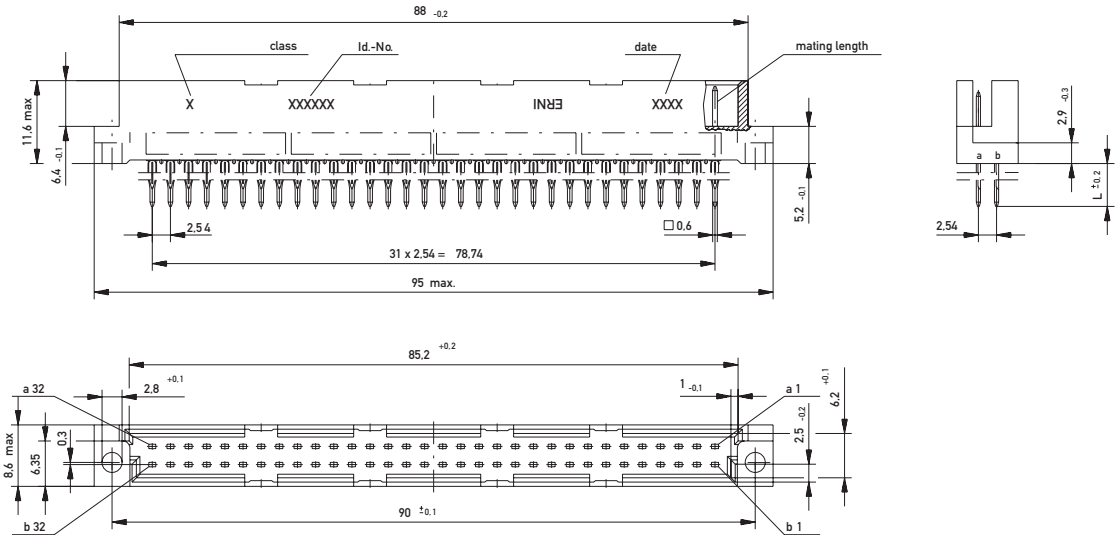

PCB drillhole pattern

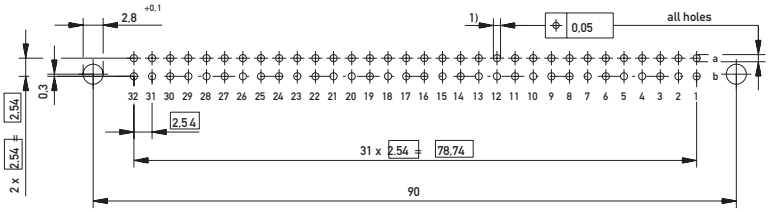

1) ø 1,0 $^{+0,09}_{-0,06}$ Diameter of finished plated-through hole
ø 1,15 ± 0,025 Diameter of drilled hole

Dimensional Drawing Solder Type Q

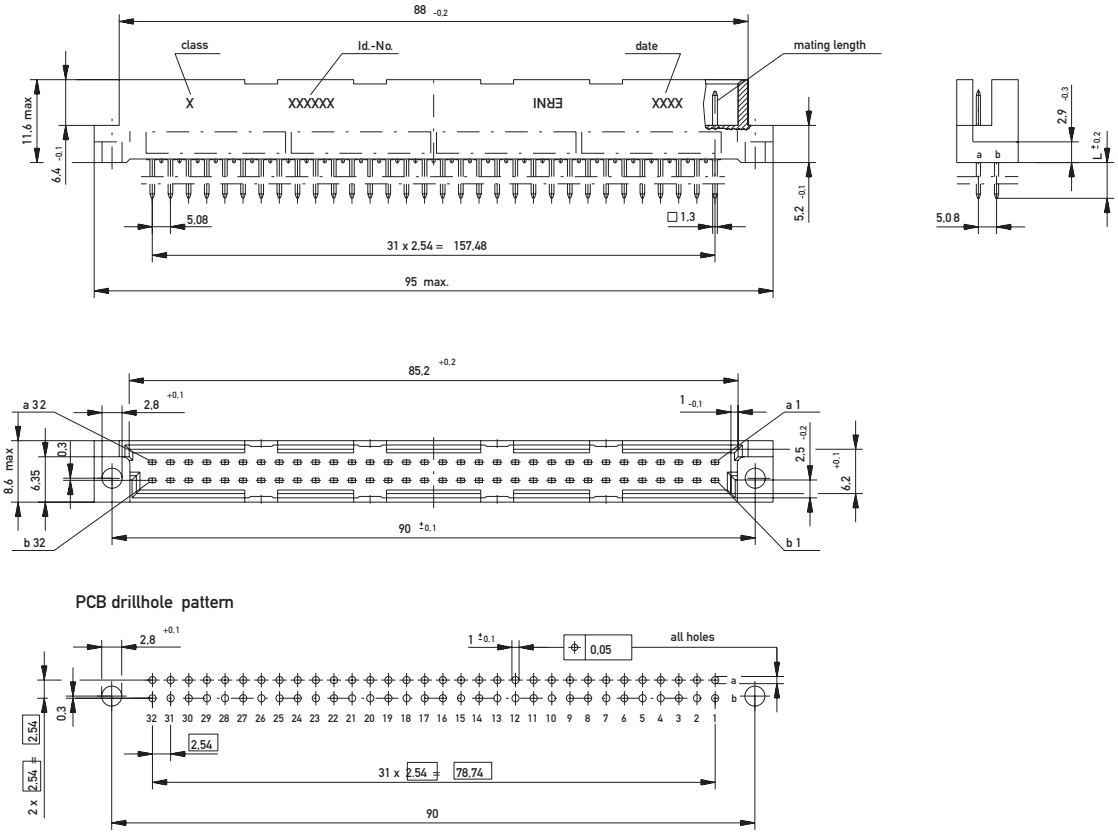

Dimensional Drawing Solder Type Q/2

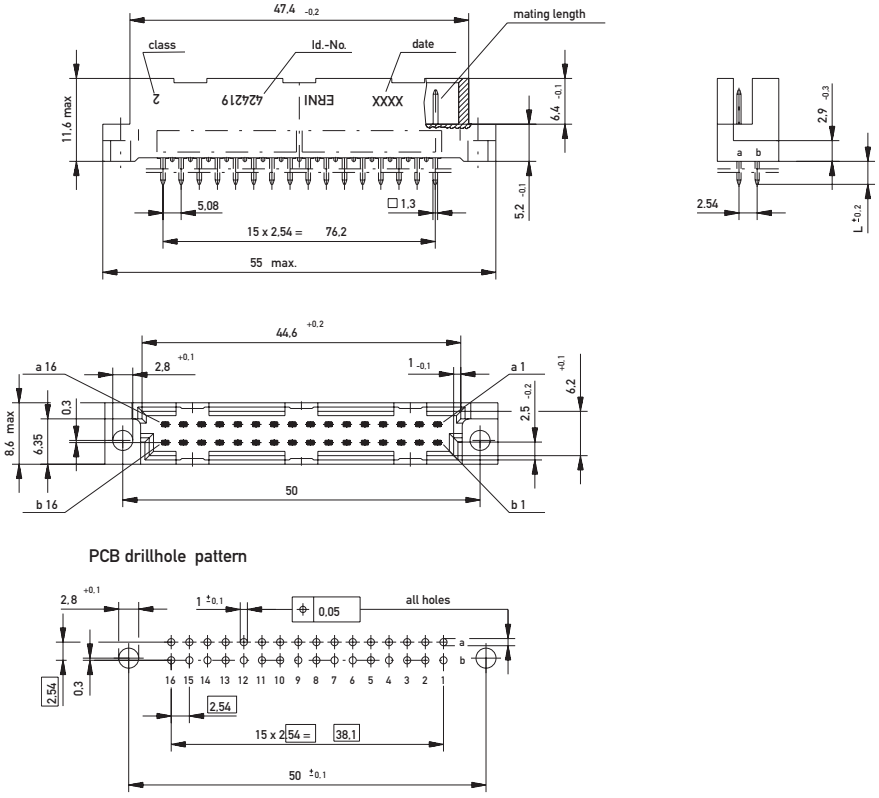

Dimensional Drawing Solder Type Q/3

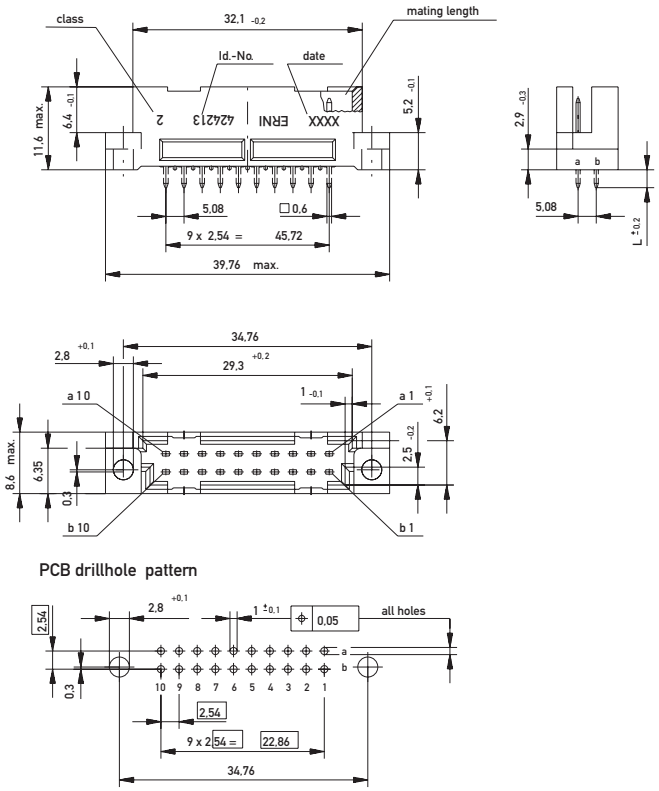

DIN 41612 / IEC 60603-2 Connectors

Type Q Male

Ordering Information

No. of Pins	Termination	Term. Length	Pin Dimensions	Class	Pressfit Zone	Part Number
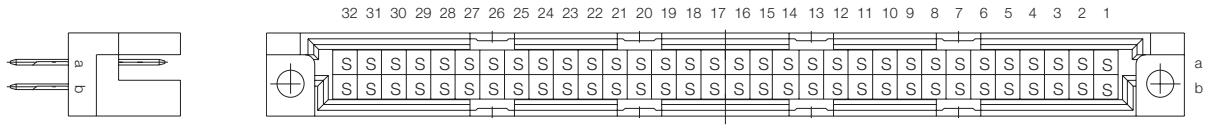						
64	Pressfit	6 mm	0.6 x 0.6 mm	2	2.5 mm	**593952**
64	Pressfit w. Transfer Zone	20 mm	0.6 x 0.6 mm	2	2.5 mm	**593964**
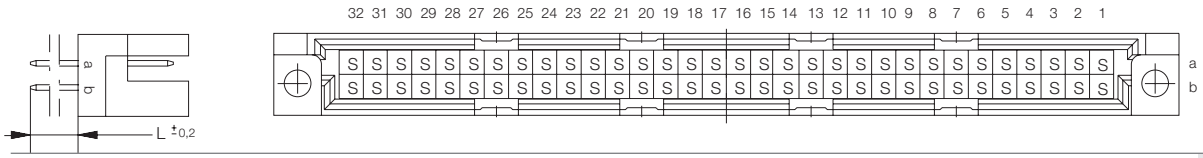						
64	Solder	4 mm	0.6 x 0.6 mm	1	–	**593933**
64	Solder	4 mm	0.6 x 0.6 mm	2	–	**593934**
64	Solder	13 mm	0.6 x 0.6 mm	1	–	**593927**
64	Solder	13 mm	0.6 x 0.6 mm	2	–	**593928**

Type Q/2

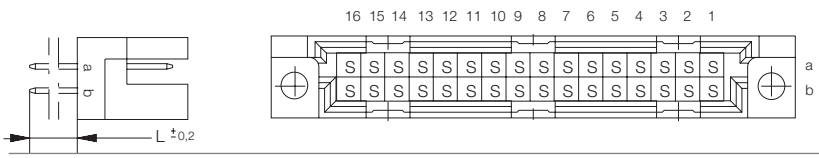						
32	Solder	4 mm	0.6 x 0.6 mm	2	–	**004483**
32	Solder	13 mm	0.6 x 0.6 mm	2	–	**424219**

Type Q/3

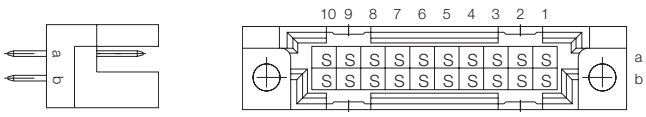						
20	Solder	4 mm	0.6 x 0.6 mm	2	–	**004498**
20	Solder	13 mm	0.6 x 0.6 mm	2	–	**424213**

DIN 41612 / IEC 60603-2 Connectors

Type Q Female

Dimensional Drawing Pressfit Type Q

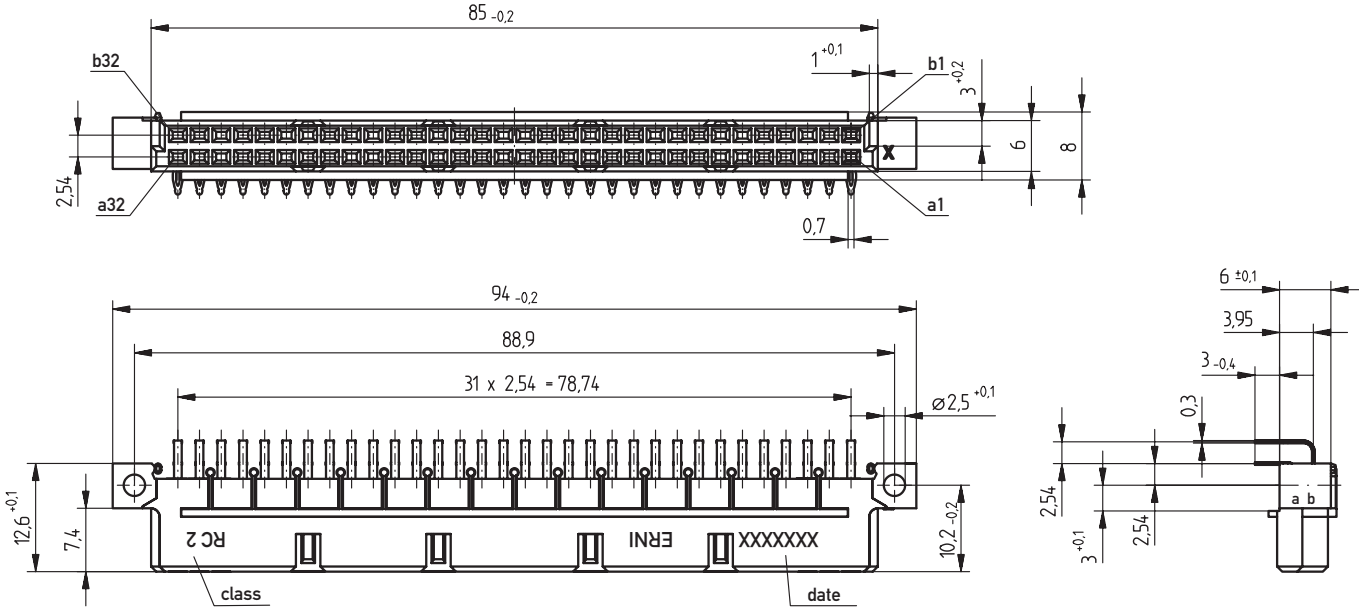

PCB drillhole pattern

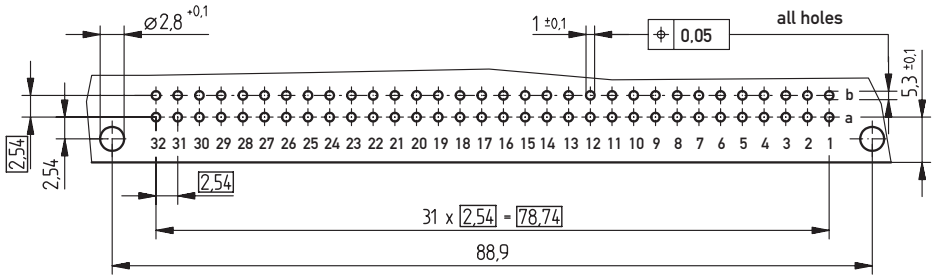

1) ø 1,0 $^{+0,09}_{-0,06}$ Diameter of finished plated-through hole

ø 1,15 $^{\pm 0,025}$ Diameter of drilled hole

Dimensional Drawing Solder Type Q

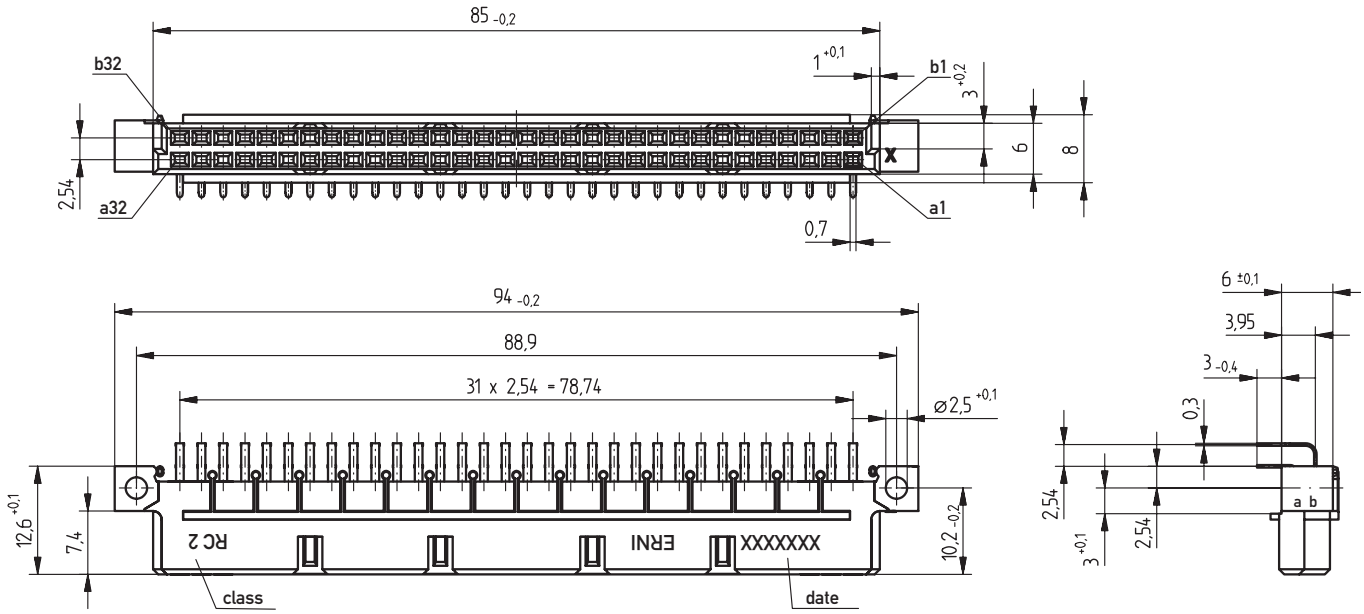

PCB drillhole pattern

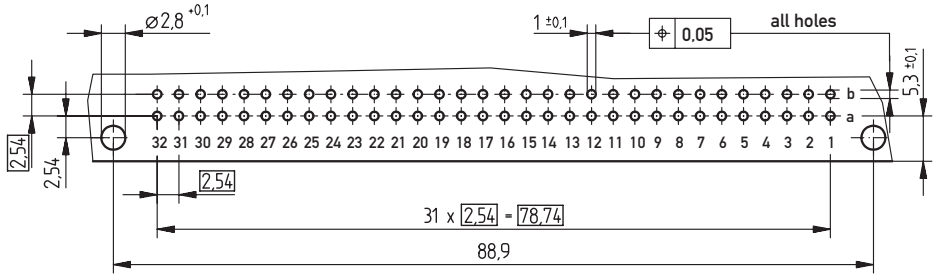

Dimensional Drawing Solder Type Q/2

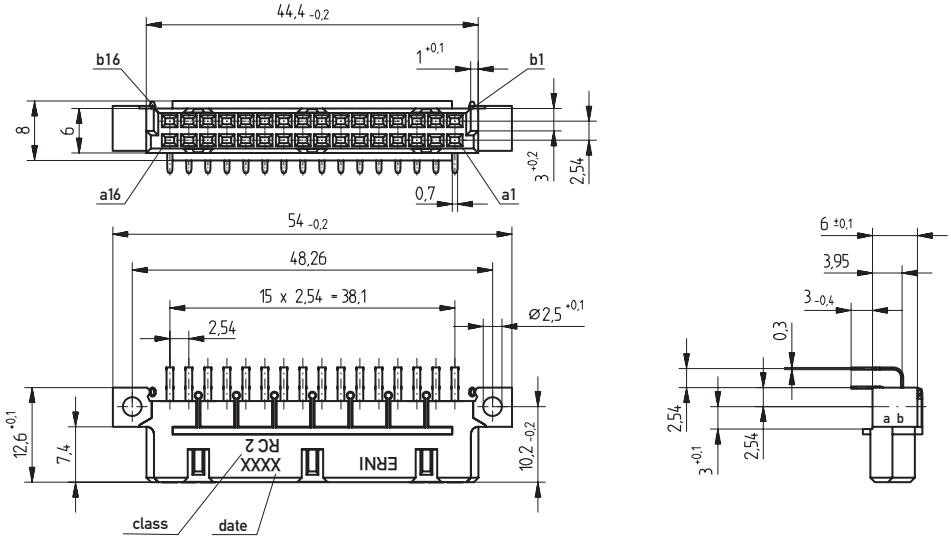

PCB drillhole pattern

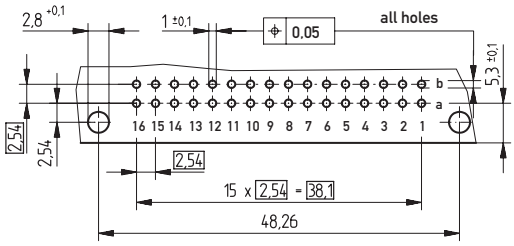

Dimensional Drawing Solder Type Q/3

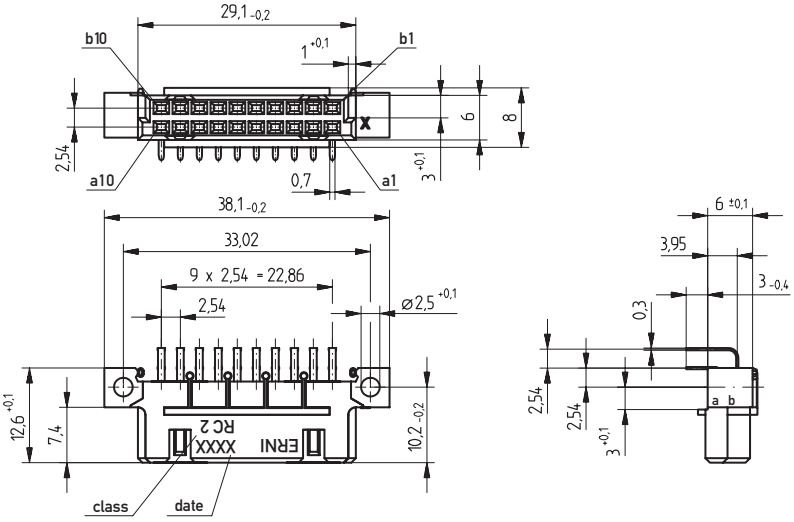

PCB drillhole pattern

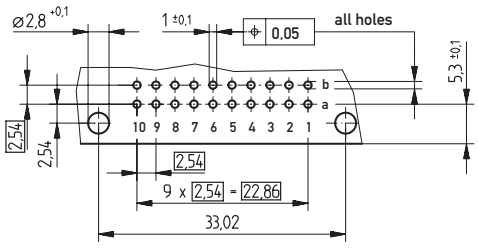

DIN 41612 / IEC 60603-2 Connectors

Type Q Female

Ordering Information

No. of Pins	Termination	Term. Length	Pin Dimensions	Class	Pressfit Zone	Part Number
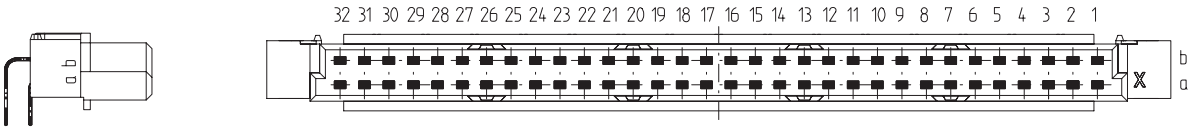						
64	Pressfit	3 mm	0.6 x 0.6 mm	2	1 mm	**364104**
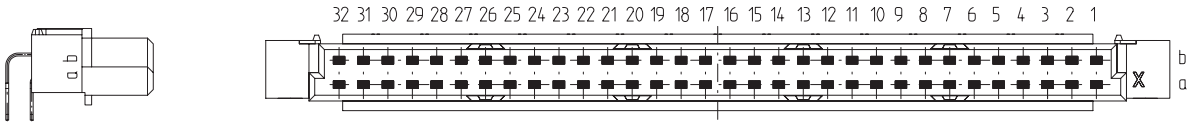						
64	Solder	3 mm	0.7 x 0.3 mm	2	–	**294721**

Type Q/2

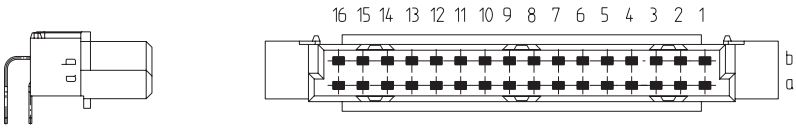						
32	Solder	3 mm	0.7 x 0.3 mm	2	–	**294722**

Type Q/3

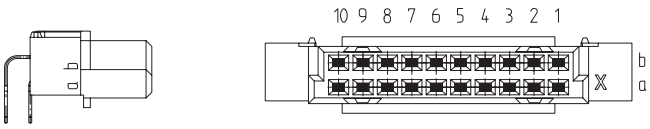						
20	Solder	3 mm	0.7 x 0.3 mm	2	–	**294927**

DIN 41612 / IEC 60603-2 Connectors

Type C Male

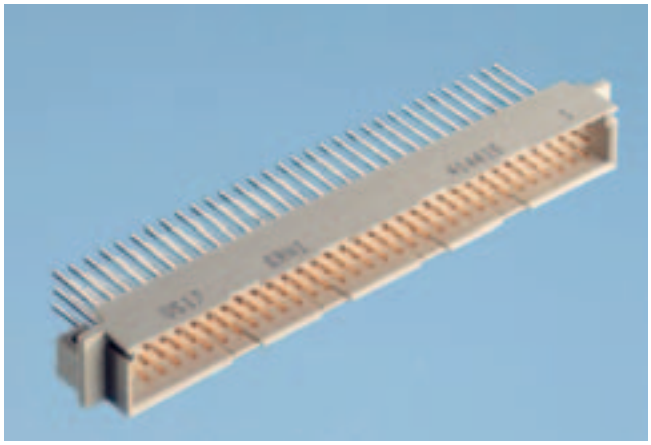

Dimensional Drawing Pressfit

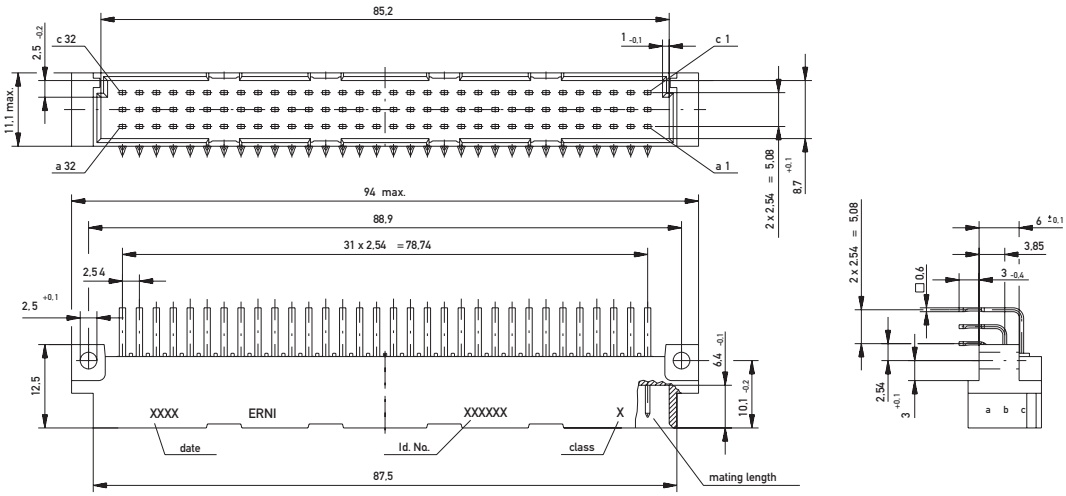

PCB drillhole pattern

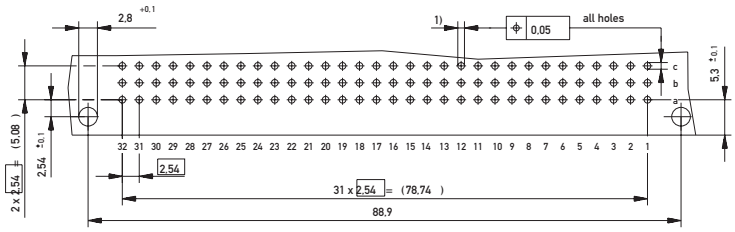

1) ø 1,0 $^{+0,09}_{-0,06}$ Diameter of finished plated-through hole
ø 1,15 ±0,025 Diameter of drilled hole

DIN 41612 / IEC 60603-2 Connectors

Type C Male

Dimensional Drawing Solder

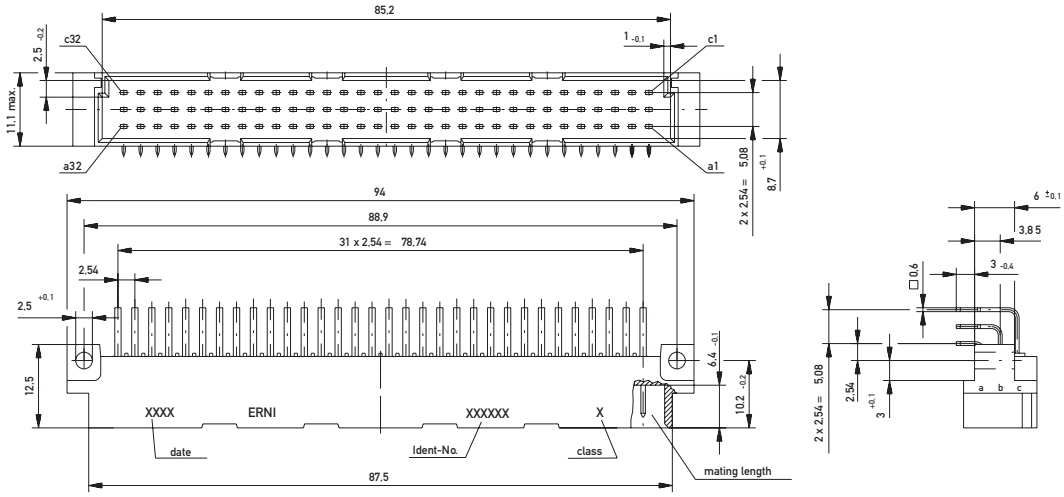

PCB drillhole pattern

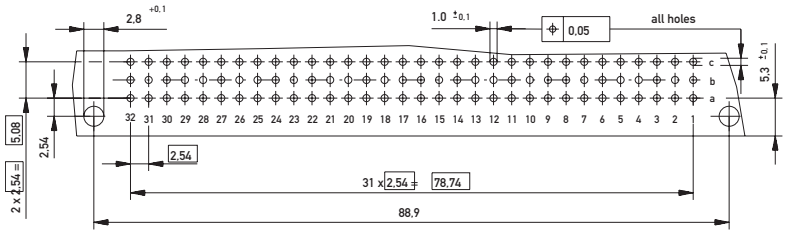

Dimensional Drawing THR

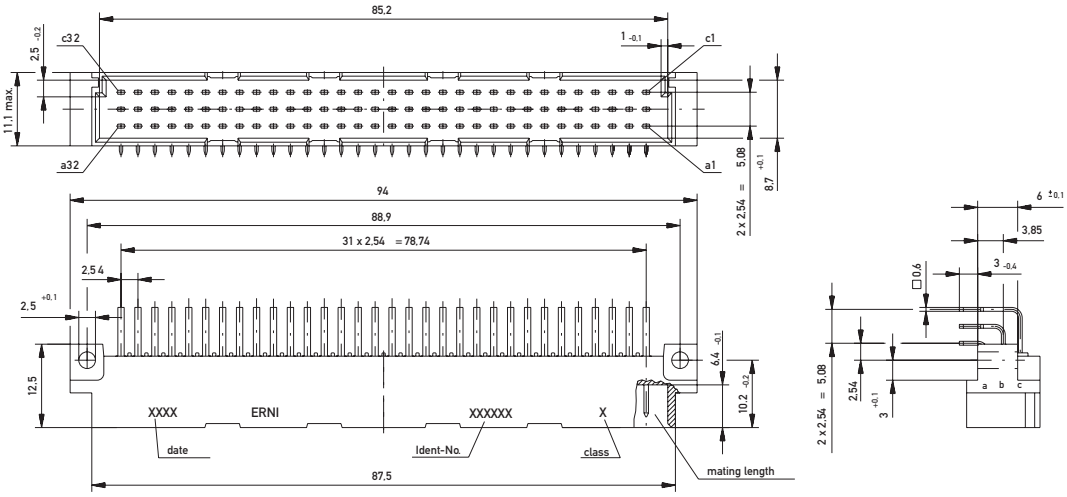

PCB drillhole pattern

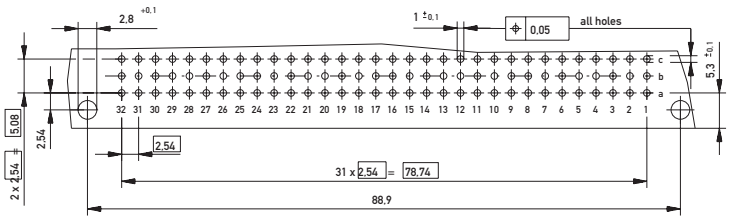

DIN 41612 / IEC 60603-2 Connectors

Type C Male

Ordering Information

No. of Pins	Termination	Term. Length	Pin Dimensions	Class	Pressfit Zone	Part Number
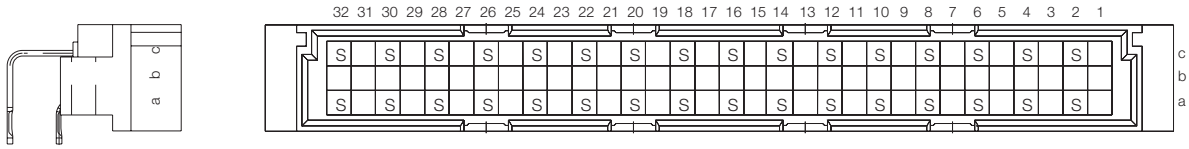						
32	Pressfit	3 mm	0.6 x 0.6 mm	2	1.5 mm	**013254**
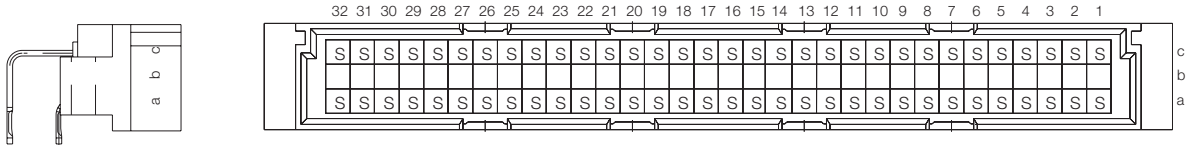						
64	Pressfit	3 mm	0.6 x 0.6 mm	2	1.5 mm	**013132**
64	Pressfit *	3 mm	0.6 x 0.6 mm	2	1.5 mm	**063795**
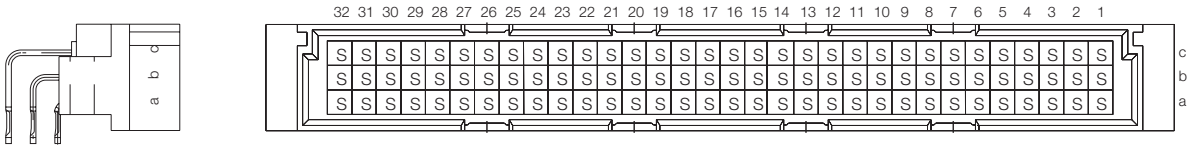						
96	Pressfit	3 mm	0.6 x 0.6 mm	2	1.5 mm	**013131**
96	Pressfit *	3 mm	0.6 x 0.6 mm	2	1.5 mm	**104552**

*For flat press-in tool.

DIN 41612 / IEC 60603-2 Connectors

Type C Male

Ordering Information

No. of Pins	Termination	Term. Length	Pin Dimensions	Class	Pressfit Zone	Part Number
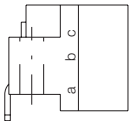 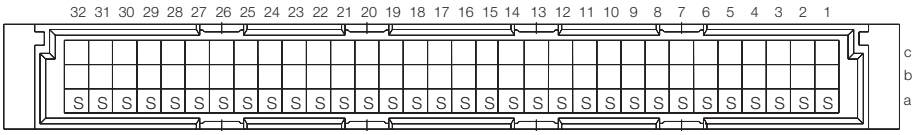						
32	Solder	3 mm	0.6 x 0.6 mm	2	–	**533404**
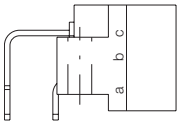 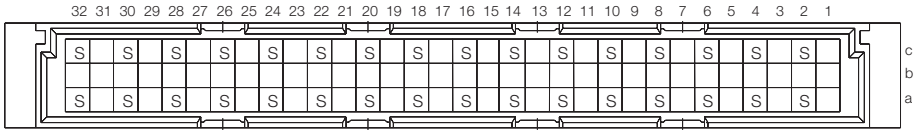						
32	Solder	3 mm	0.6 x 0.6 mm	1	–	**533203**
32	Solder	3 mm	0.6 x 0.6 mm	2	–	**533403**
32	Solder with Clip	3 mm	0.6 x 0.6 mm	2	–	**023783**
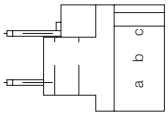 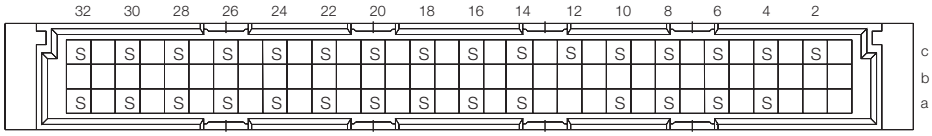						
32	Solder	3.8 mm	0.6 x 0.6 mm	2	–	**414401**
32	Solder	12 mm	0.6 x 0.6 mm	1	–	**414403**
32	Solder	12 mm	0.6 x 0.6 mm	2	–	**414404**
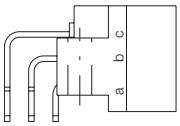 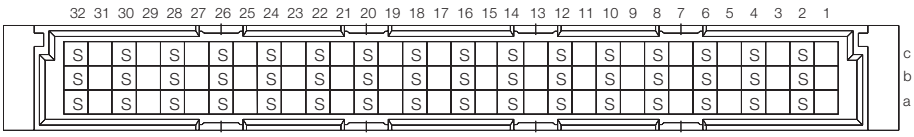						
48	Solder	3 mm	0.6 x 0.6 mm	2	–	**533423**
48	Solder with Clip	3 mm	0.6 x 0.6 mm	2	–	**123751**

DIN 41612 / IEC 60603-2 Connectors

Type C Male

Ordering Information

No. of Pins	Termination	Term. Length	Pin Dimensions	Class	Pressfit Zone	Part Number
64	Solder	3 mm	0.6 x 0.6 mm	1	–	**533201**
64	Solder	3 mm	0.6 x 0.6 mm	2	–	**533401**
64	Solder with Clip	3 mm	0.6 x 0.6 mm	2	–	**004413**
64	Solder	3.8 mm	0.6 x 0.6 mm	1	–	**414406**
64	Solder	3.8 mm	0.6 x 0.6 mm	2	–	**414407**
64	Solder	12 mm	0.6 x 0.6 mm	1	–	**414409**
64	Solder	12 mm	0.6 x 0.6 mm	2	–	**414410**
96	Solder	3 mm	0.6 x 0.6 mm	1	–	**533202**
96	Solder	3 mm	0.6 x 0.6 mm	2	–	**533402**
96	Solder with Clip	3 mm	0.6 x 0.6 mm	2	–	**434325**
96	Solder	3.8 mm	0.6 x 0.6 mm	1	–	**414412**
96	Solder	3.8 mm	0.6 x 0.6 mm	2	–	**414413**
96	Solder	12 mm	0.6 x 0.6 mm	1	–	**414415**
96	Solder	12 mm	0.6 x 0.6 mm	2	–	**414416**

DIN 41612 / IEC 60603-2 Connectors

Type C Male

Ordering Information

No. of Pins	Termination	Term. Length	Pin Dimensions	Class	Pressfit Zone	Part Number
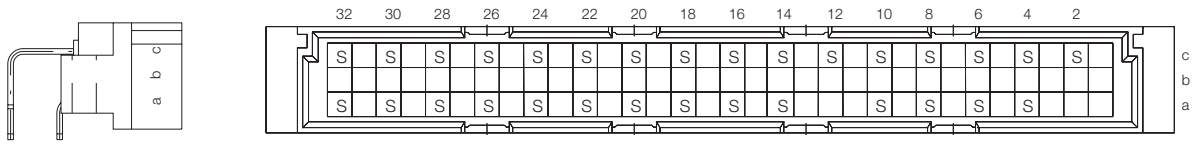						
32	THR	3 mm	0.6 x 0.6 mm	2	–	**223346**
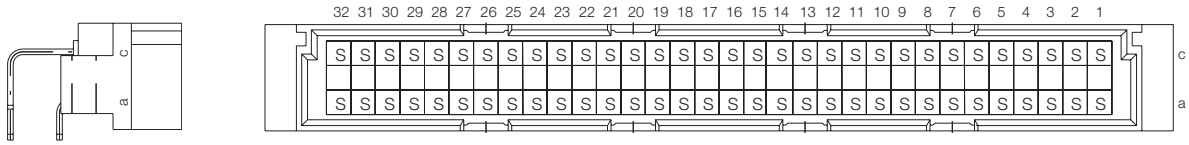						
64	THR	3 mm	0.6 x 0.6 mm	2	–	**063515**
64	THR with Clip	3 mm	0.6 x 0.6 mm	2	–	**164944**
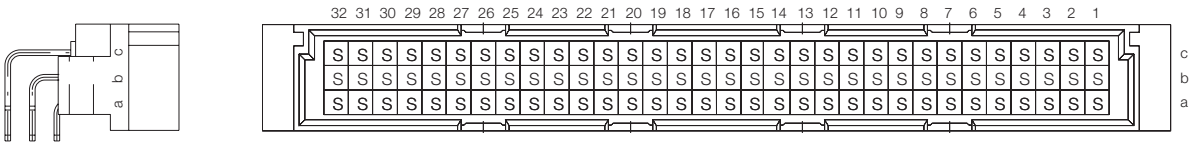						
96	THR	3 mm	0.6 x 0.6 mm	2	–	**134581**
96	THR with Clip	3 mm	0.6 x 0.6 mm	2	–	**144705**

DIN 41612 / IEC 60603-2 Connectors

Type C/2 Male

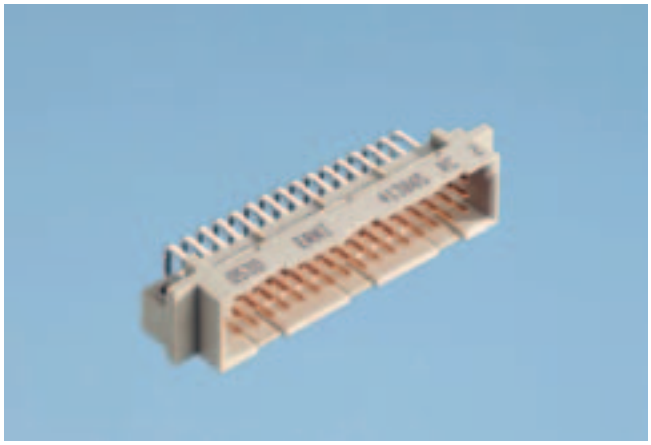

Dimensional Drawing Pressfit

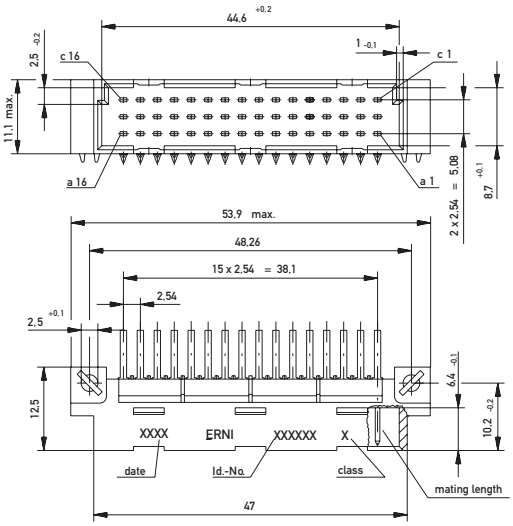

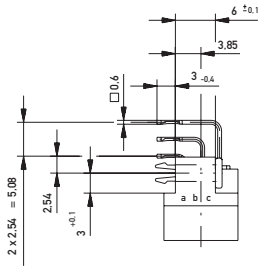

PCB drillhole pattern

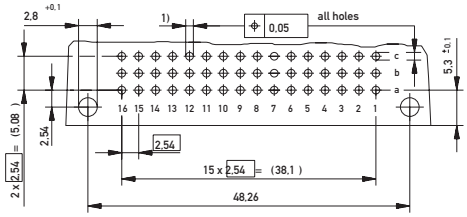

1) ø 1,0 $^{+0.09}_{-0.06}$ Diameter of finished plated-through hole
ø 1,15 ±0.025 Diameter of drilled hole

DIN 41612 / IEC 60603-2 Connectors

Type C/2 Male

Dimensional Drawing Solder

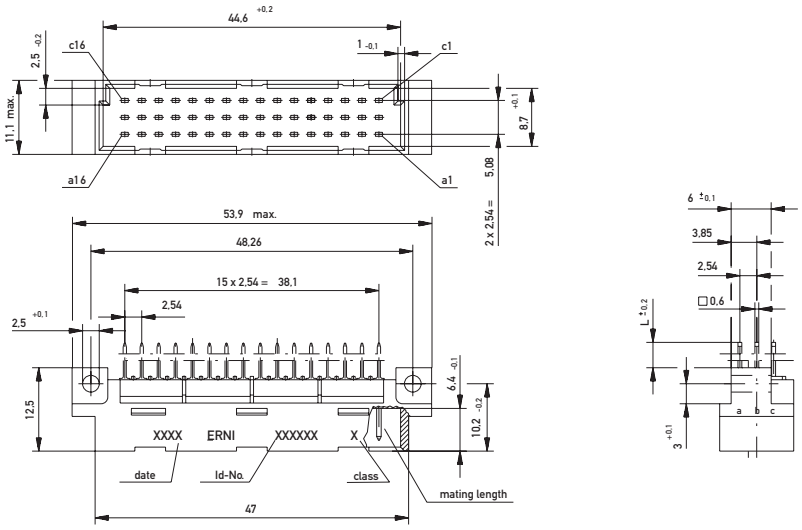

PCB drillhole pattern

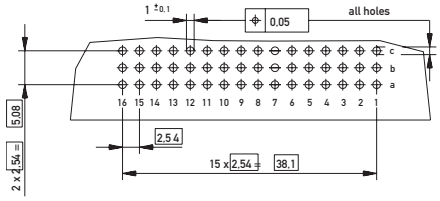

Dimensional Drawing THR

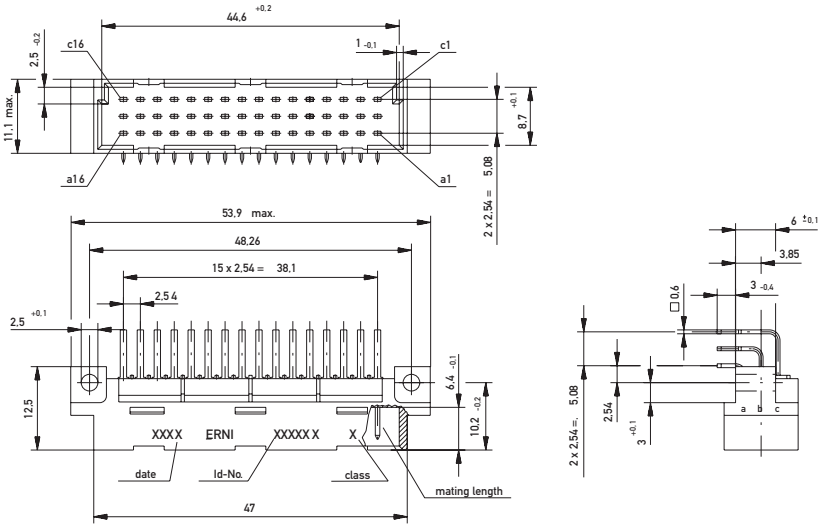

PCB drillhole pattern

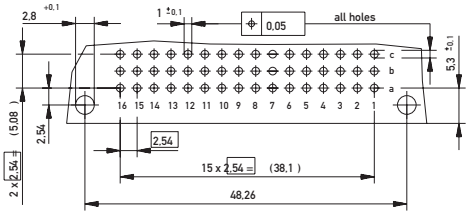

Ordering Information

No. of Pins	Termination	Term. Length	Pin Dimensions	Class	Pressfit Zone	Part Number
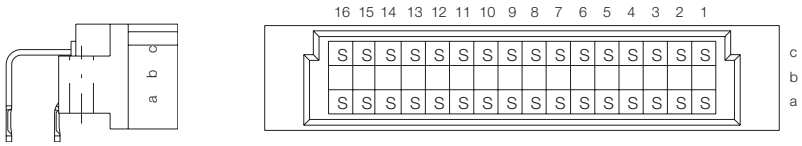						
32	Pressfit	3 mm	0.6 x 0.6 mm	2	1.5 mm	**043582**
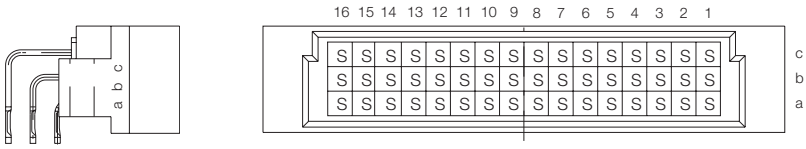						
48	Pressfit	3 mm	0.6 x 0.6 mm	2	1.5 mm	**013136**
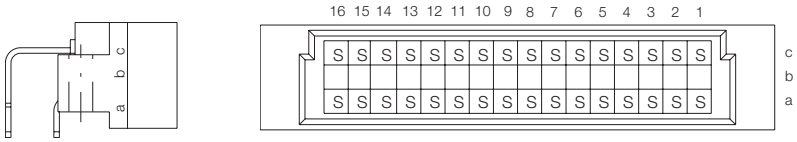						
32	Solder	3 mm	0.6 x 0.6 mm	1	–	**413858**
32	Solder	3 mm	0.6 x 0.6 mm	2		**413859**
32	Solder with Clip	3 mm	0.6 x 0.6 mm	2	–	**123717**
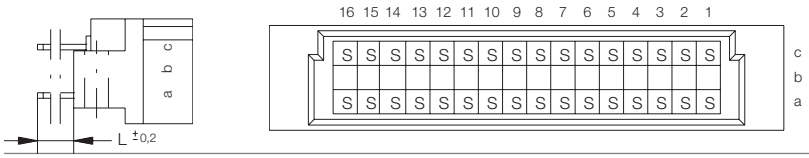						
32	Solder	3.8 mm	0.6 x 0.6 mm	1	–	**594633**
32	Solder	3.8 mm	0.6 x 0.6 mm	2	–	**594634**
32	Solder	12 mm	0.6 x 0.6 mm	1	–	**594635**
32	Solder	12 mm	0.6 x 0.6 mm	2	–	**594636**

DIN 41612 / IEC 60603-2 Connectors

Type C/2 Male

Ordering Information

No. of Pins	Termination	Term. Length	Pin Dimensions	Class	Pressfit Zone	Part Number
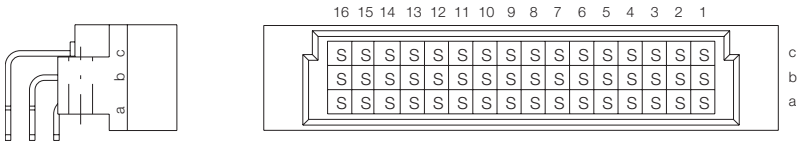						
48	Solder	3 mm	0.6 x 0.6 mm	1	–	**413864**
48	Solder	3 mm	0.6 x 0.6 mm	2	–	**413865**
48	Solder with Clip	3 mm	0.6 x 0.6 mm	2	–	**434329**
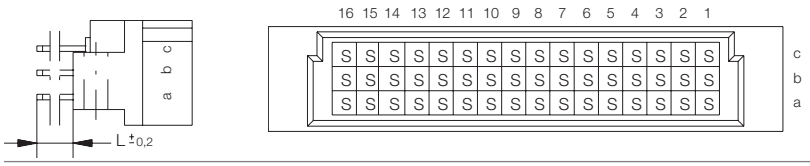						
48	Solder	3.8 mm	0.6 x 0.6 mm	1	–	**594400**
48	Solder	3.8 mm	0.6 x 0.6 mm	2	–	**594638**
48	Solder	12 mm	0.6 x 0.6 mm	1	–	**594640**
48	Solder	12 mm	0.6 x 0.6 mm	2	–	**594641**
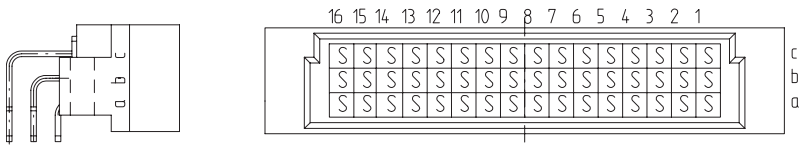						
48	THR	3 mm	0.6 x 0.6 mm	2	–	**154954**
48	THR with Clip	3 mm	0.6 x 0.6 mm		–	**123601**

DIN 41612 / IEC 60603-2 Connectors

Type C/3 Male

Dimensional Drawing Pressfit

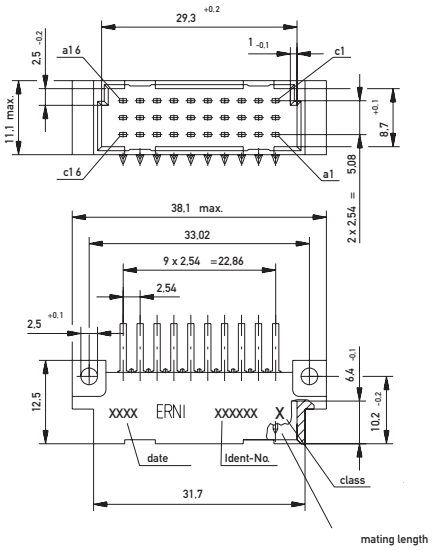

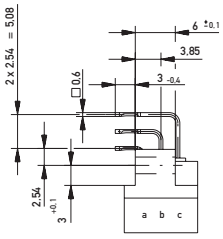

PCB drillhole pattern

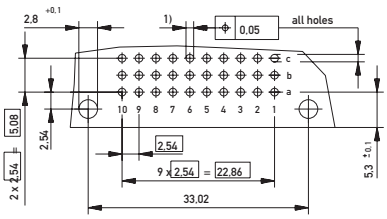

1) ø 1,0 +0,09 -0,06 Diameter of finished plated-through hole

ø 1,15 ±0,025 Diameter of drilled hole

DIN 41612 / IEC 60603-2 Connectors

Type C/3 Male

Dimensional Drawing Solder

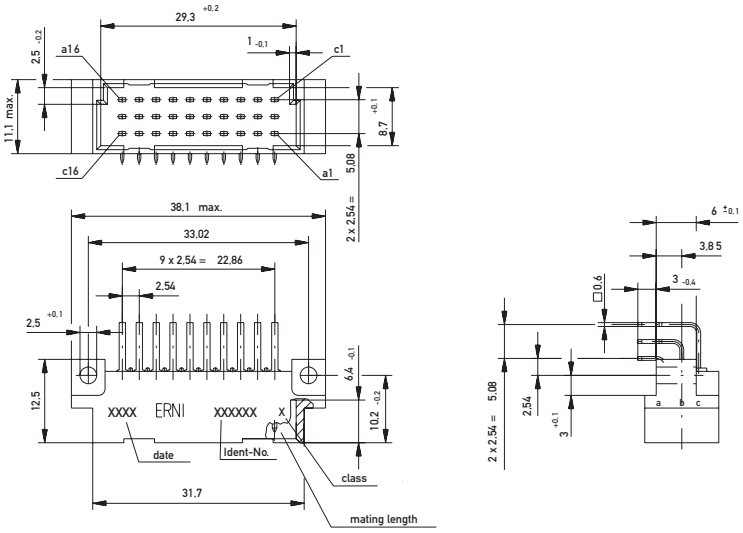

PCB drillhole pattern

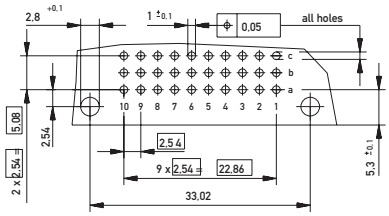

Dimensional Drawing THR

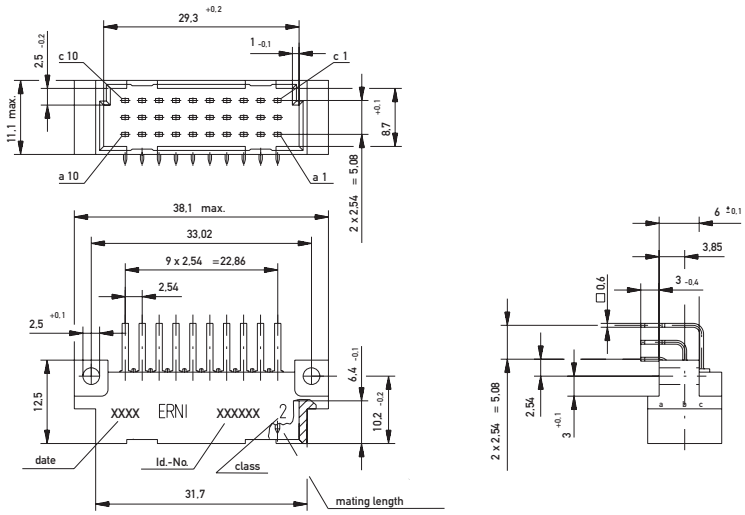

PCB drillhole pattern

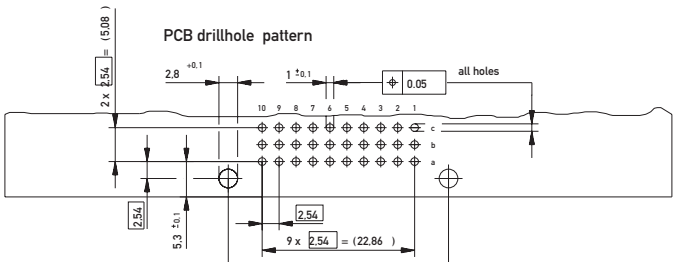

DIN 41612 / IEC 60603-2 Connectors

Type C/3 Male

Ordering Information

No. of Pins	Termination	Term. Length	Pin Dimensions	Class	Pressfit Zone	Part Number
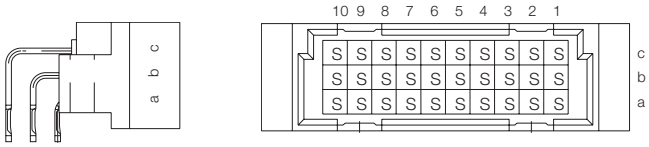						
30	Pressfit	3 mm	0.6 x 0.6 mm	2	1.5 mm	**013134**
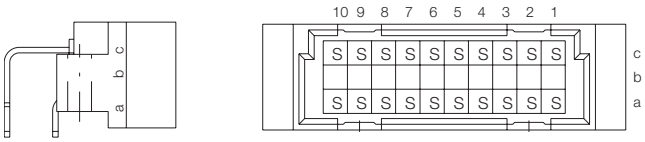						
20	Solder	3 mm	0.6 x 0.6 mm	2	–	**004362**
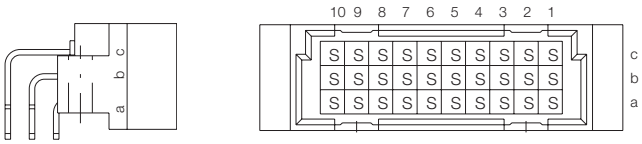						
30	Solder	3 mm	0.6 x 0.6 mm	1	–	**424188**
30	Solder	3 mm	0.6 x 0.6 mm	2	–	**424189**
30	Solder with Clip	3 mm	0.6 x 0.6 mm	2	–	**123589**
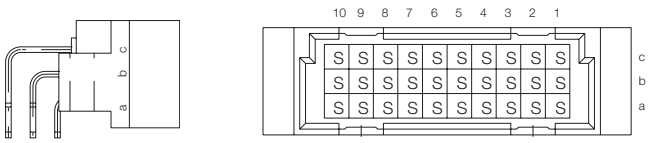						
30	THR	3 mm	0.6 x 0.6 mm	2	–	**154956**
30	THR with Clip	3 mm	0.6 x 0.6 mm	2	–	**154957**

DIN 41612 / IEC 60603-2 Connectors

Type C Female

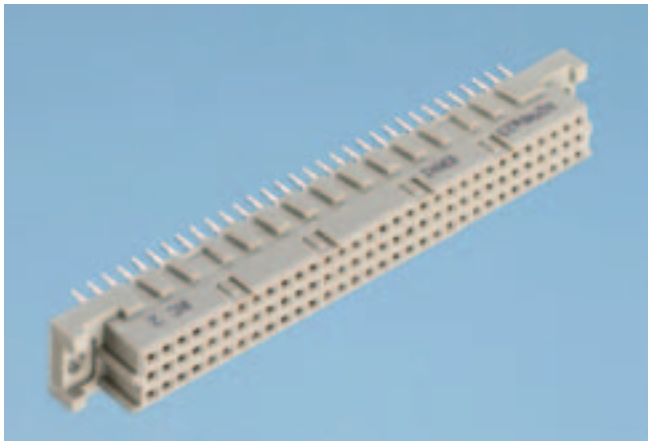

Dimensional Drawing Pressfit

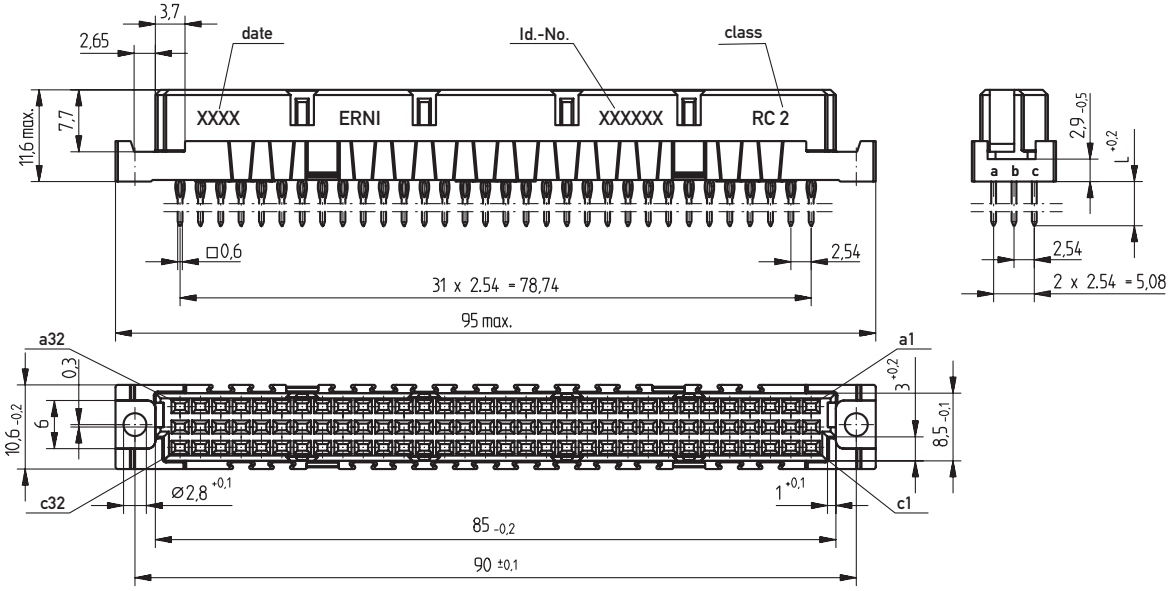

PCB drillhole pattern

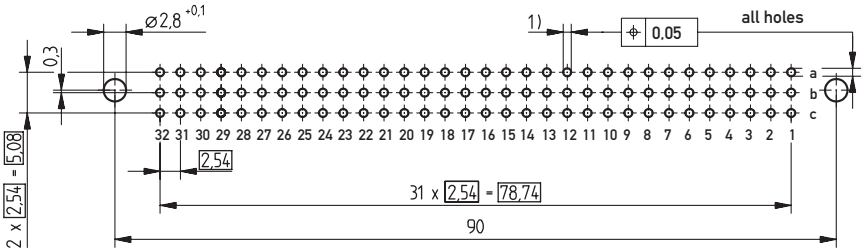

1) ø 1,0 $^{+0.09}_{-0.06}$ Diameter of finished plated-through hole

ø 1,15 ±0,025 Diameter of drilled hole

Dimensional Drawing Solder

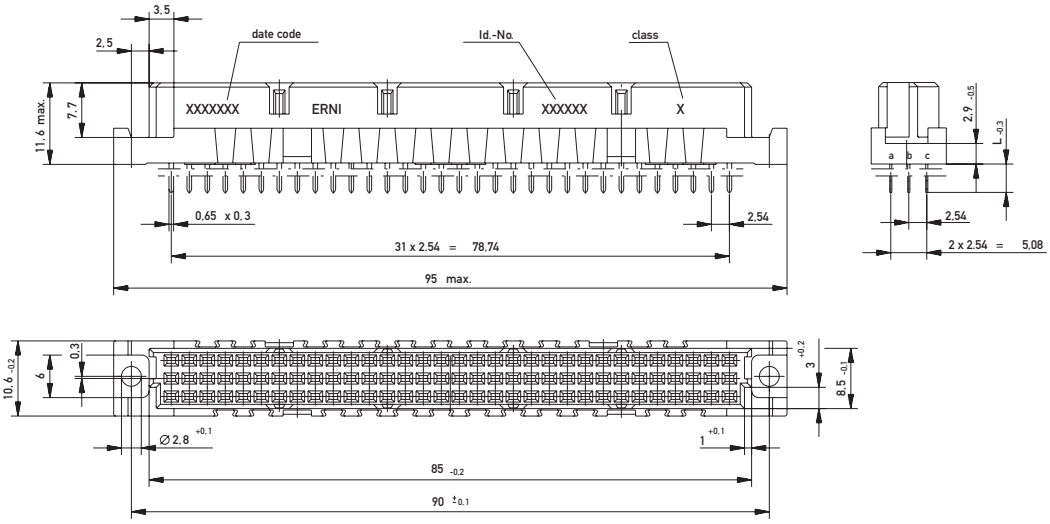

PCB drillhole pattern

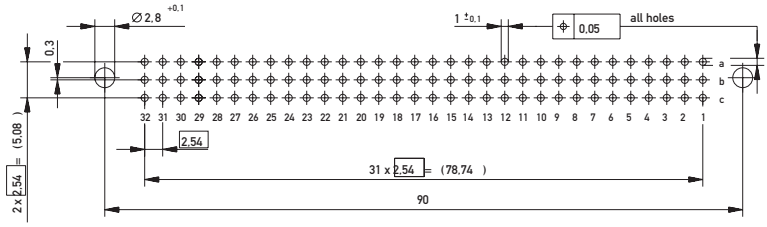

Dimensional Drawing THR

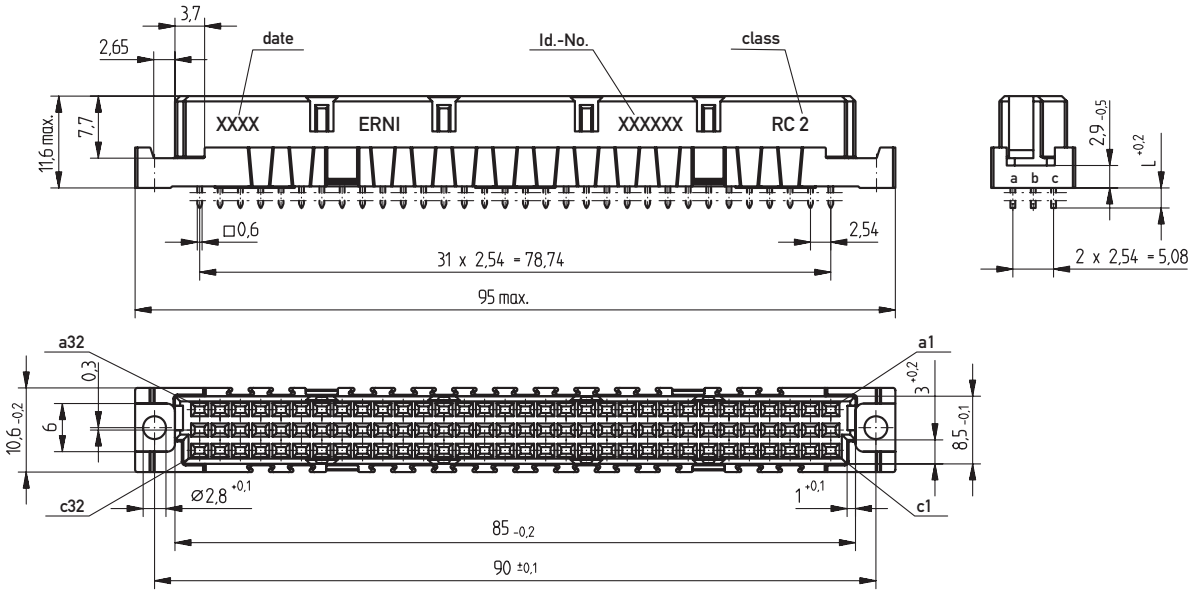

PCB drillhole pattern

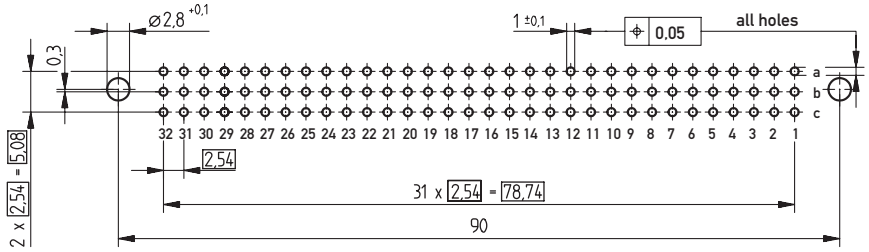

Ordering Information

No. of Pins	Termination	Term. Length	Pin Dimensions	Class	Pressfit Zone	Part Number
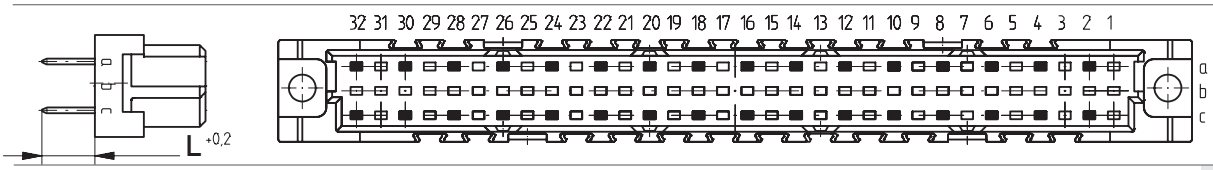						
32	Pressfit	5.5 mm	0.6 x 0.6 mm	2	–	**254135**
32	Pressfit	17 mm	0.6 x 0.6 mm	1	2.5 mm	**284971**
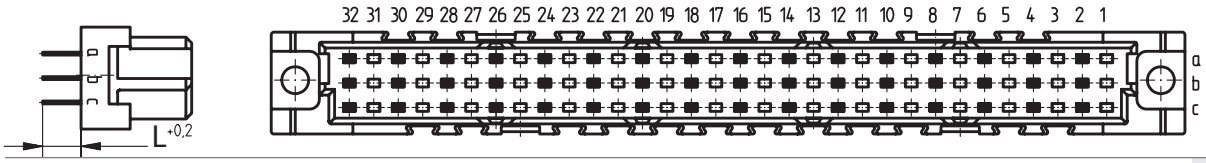						
48	Pressfit	4 mm	0.8 x 0.3 mm	2	–	**234069**
48	Pressfit	5.5 mm	0.6 x 0.6 mm	2	–	**254136**

DIN 41612 / IEC 60603-2 Connectors

Type C Female

Ordering Information

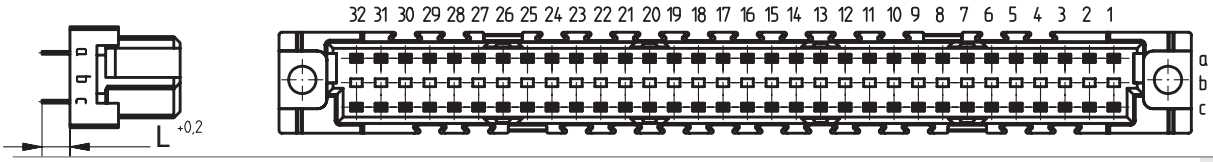

No. of Pins	Termination	Term. Length	Pin Dimensions	Class	Pressfit Zone	Part Number
64	Pressfit	2.9 mm	0.65 x 0.3 mm	2	2 mm	**254120**
64	Pressfit	4 mm	0.8 x 0.3 mm	2	–	**244268**
64	Pressfit w/o Flange	4.5 mm	0.65 x 0.3 mm	2	2 mm	**294742**
64	Pressfit	5.5 mm	0.6 x 0.6 mm	2	–	**254137**
64	Pressfit w/o Flange	5.5 mm	0.6 x 0.6 mm	2	–	**254851**
64	Pressfit New Design w. Transfer Zone	13 mm	0.6 x 0.6 mm	2	–	**244126**
64	Pressfit New Design	17 mm	0.6 x 0.6 mm	2	–	**244294**
64	Pressfit New Design w. Transfer Zone	17 mm	0.6 x 0.6 mm	2	–	**224410**

Ordering Information

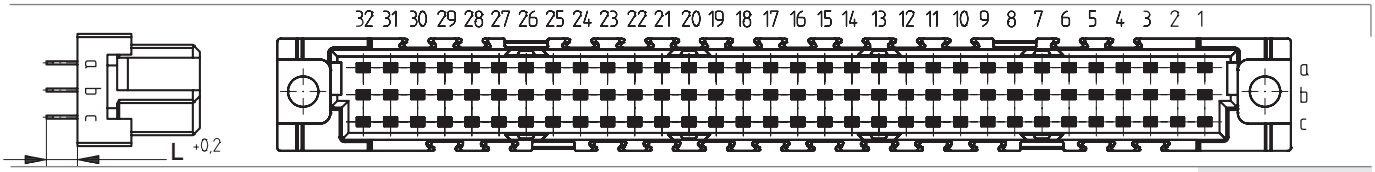

No. of Pins	Termination	Term. Length	Pin Dimensions	Class	Pressfit Zone	Part Number
96	Pressfit	2.9 mm	0.65 x 0.3 mm	2	–	**254117**
96	Pressfit	4 mm	0.8 x 0.3 mm	2	–	**204752**
96	Pressfit w/o Flange	4 mm	0.8 x 0.3 mm	2	–	**254121**
96	Pressfit	5.5 mm	0.6 x 0.6 mm	1	–	**254015**
96	Pressfit	5.5 mm	0.6 x 0.6 mm	2	–	**224408**
96	Pressfit w. Transfer Zone	13 mm	0.6 x 0.6 mm	2	–	**284135**
96	Pressfit New Design w. Transfer Zone	13 mm	0.6 x 0.6 mm	2	–	**224412**
96	Pressfit	17 mm	0.6 x 0.6 mm	1	–	**284134**
96	Pressfit New Design	17 mm	0.6 x 0.6 mm	2	–	**234516**
96	Pressfit w. Transfer Zone	17 mm	0.6 x 0.6 mm	1	–	**284752**
96	Pressfit New Design w. Transfer Zone	17 mm	0.6 x 0.6 mm	2	–	**244295**

DIN 41612 / IEC 60603-2 Connectors

Type C Female

Ordering Information

No. of Pins	Termination	Term. Length	Pin Dimensions	Class	Pressfit Zone	Part Number
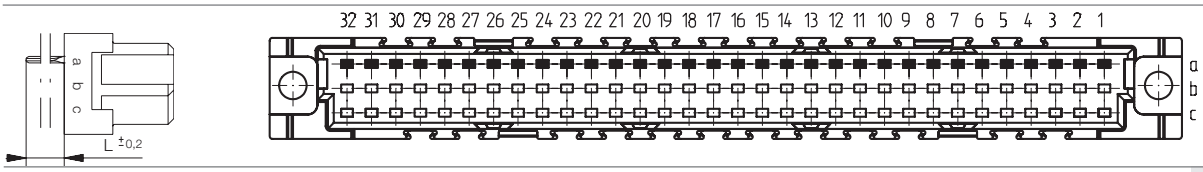						
32	Solder New Design	13 mm	0.6 x 0.6 mm	2	–	**244296**
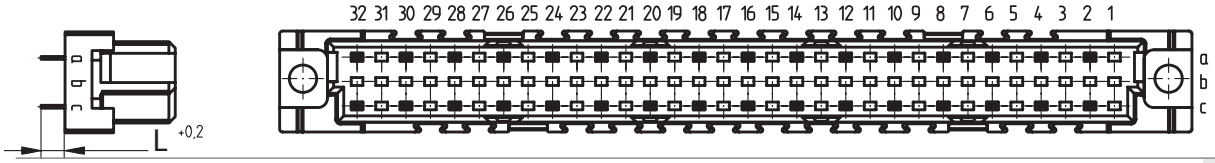						
32	Solder	2.5 mm	0.65 x 0.3 mm	2	–	**284652**
32	Solder	4 mm	0.65 x 0.3 mm	1	–	**284970**
32	Solder	4 mm	0.65 x 0.3 mm	2	–	**244265**
32	Solder	13 mm	0.6 x 0.6 mm	1	–	**284968**
32	Solder New Design	13 mm	0.6 x 0.6 mm	2	–	**244297**
32	Solder New Design w. Transfer Zone	13 mm	0.6 x 0.6 mm	2	–	**244298**
32	Solder New Design w. Transfer Zone	17 mm	0.6 x 0.6 mm	2	–	**244299**

DIN 41612 / IEC 60603-2 Connectors

Type C Female

Ordering Information

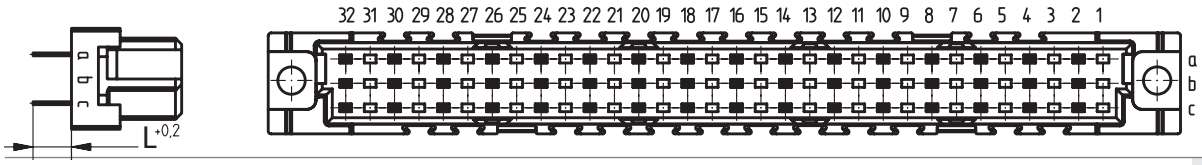

No. of Pins	Termination	Term. Length	Pin Dimensions	Class	Pressfit Zone	Part Number
48	Solder	4 mm	0.65 x 0.3 mm	1	–	**284975**
48	Solder New Design with Clip	4 mm	0.65 x 0.3 mm	2	–	**234432**
48	Solder	4 mm	0.65 x 0.3 mm	2	–	**284082**
48	Solder New Design	13 mm	0.6 x 0.6 mm	2	–	**244300**

DIN 41612 / IEC 60603-2 Connectors

Type C Female

Ordering Information

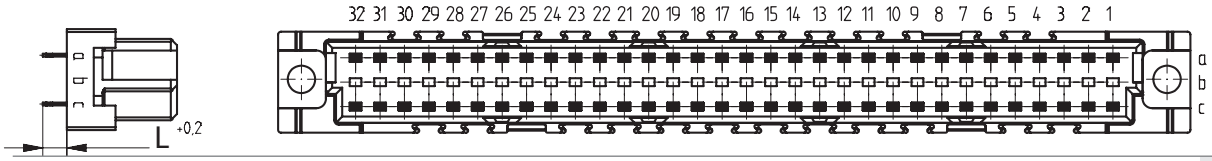

No. of Pins	Termination	Term. Length	Pin Dimensions	Class	Pressfit Zone	Part Number
64	Solder w. retaining Loop	2.5 mm	0.65 x 0.3 mm	2	–	**284170**
64	Solder	4 mm	0.65 x 0.3 mm	1	–	**284979**
64	Solder New Design	4 mm	0.65 x 0.3 mm	2	–	**224411**
64	Solder New Design with Clip	4 mm	0.65 x 0.3 mm	2	–	**224471**
64	Solder w. retaining Loop	4 mm	0.8 x 0.3 mm	2	–	**223839**
64	Solder	13 mm	0.6 x 0.6 mm	1	–	**284977**
64	Solder New Design	13 mm	0.6 x 0.6 mm	2	–	**244301**
64	Solder New Design w. Transfer Zone	13 mm	0.6 x 0.6 mm	2	–	**244302**
64	Solder w. Transfer Zone	17 mm	0.6 x 0.6 mm	1	–	**284976**
64	Solder New Design w. Transfer Zone	17 mm	0.6 x 0.6 mm	2	–	**244303**

DIN 41612 / IEC 60603-2 Connectors

Type C Female

Ordering Information

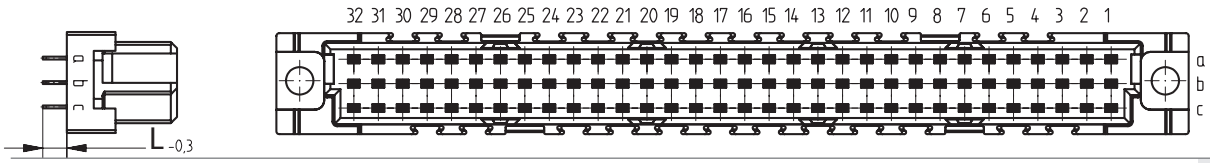

No. of Pins	Termination	Term. Length	Pin Dimensions	Class	Pressfit Zone	Part Number
96	Solder	2.5 mm	0.65 x 0.3 mm	2	–	**224470**
96	Solder w. retaining Loop	2.5 mm	0.65 x 0.3 mm	2	–	**284991**
96	Solder	4 mm	0.65 x 0.3 mm	1	–	**254897**
96	Solder New Design	4 mm	0.65 x 0.3 mm	2	–	**214836**
96	Solder w. retaining Loop	4 mm	0.65 x 0.3 mm	2	–	**284308**
96	Solder	13 mm	0.6 x 0.6 mm	1	–	**284984**
96	Solder New Design	13 mm	0.6 x 0.6 mm	2	–	**244304**
96	Solder New Design w. Transfer Zone	13 mm	0.6 x 0.6 mm	2	–	**244305**
96	Solder New Design	17 mm	0.6 x 0.6 mm	2	–	**244306**
96	Solder w. Transfer Zone	17 mm	0.6 x 0.6 mm	1	–	**254931**
96	Solder New Design w. Transfer Zone	17 mm	0.6 x 0.6 mm	2	–	**244307**

DIN 41612 / IEC 60603-2 Connectors

Type C Female

Ordering Information

No. of Pins	Termination	Term. Length	Pin Dimensions	Class	Pressfit Zone	Part Number
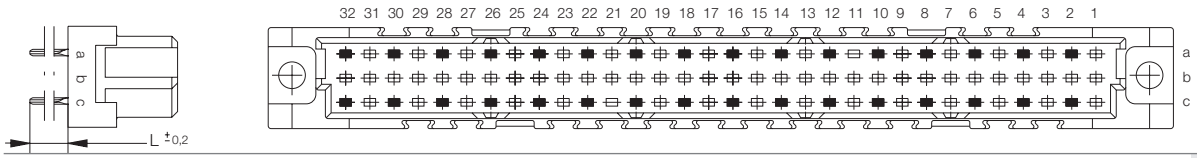						
32	THR	2.9 mm	0.3 x 0.65 mm	2	–	**223368**
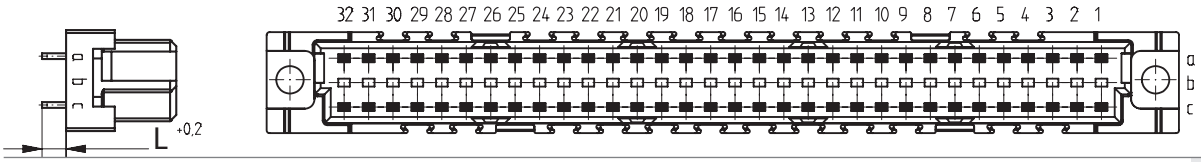						
64	THR	2.5 mm	0.6 x 0.6 mm	2	–	**224475**
64	THR	2.5 mm	0.6 x 0.6 mm	2	–	**224476**
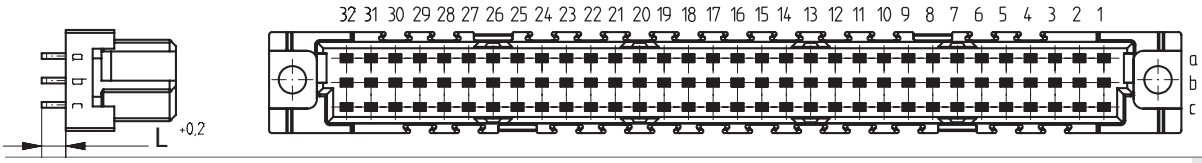						
96	THR	2.5 mm	0.6 x 0.6 mm	2	–	**224473**
96	THR	2.5 mm	0.6 x 0.6 mm	2	–	**224474**

DIN 41612 / IEC 60603-2 Connectors

Type C/2 Female

Dimensional Drawing Pressfit

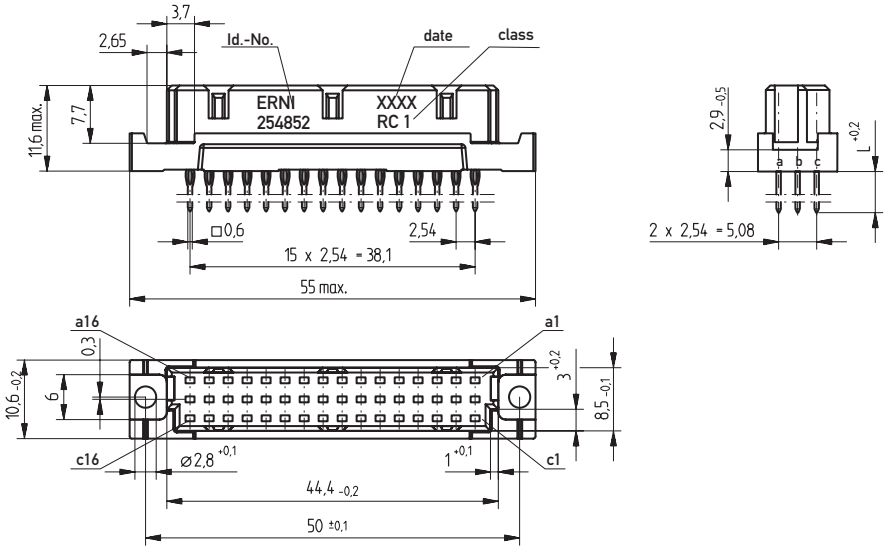

PCB drillhole pattern

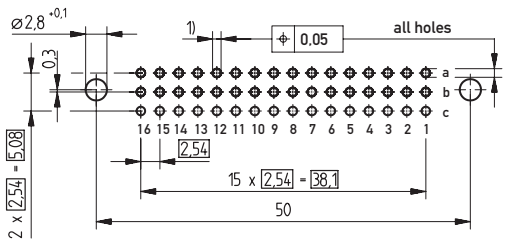

1) ø 1,0 $^{+0.09}_{-0.06}$ Diameter of finished plated-through hole
ø 1,15 $^{\pm 0.025}$ Diameter of drilled hole

DIN 41612 / IEC 60603-2 Connectors

Type C/2 Female

Dimensional Drawing Solder

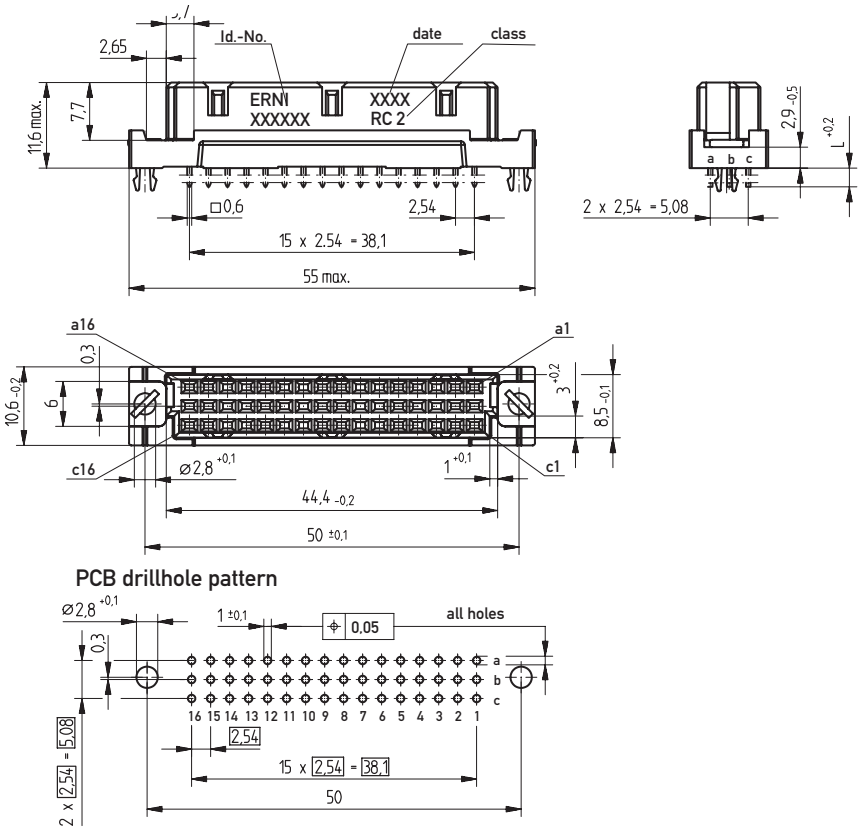

Dimensional Drawing THR

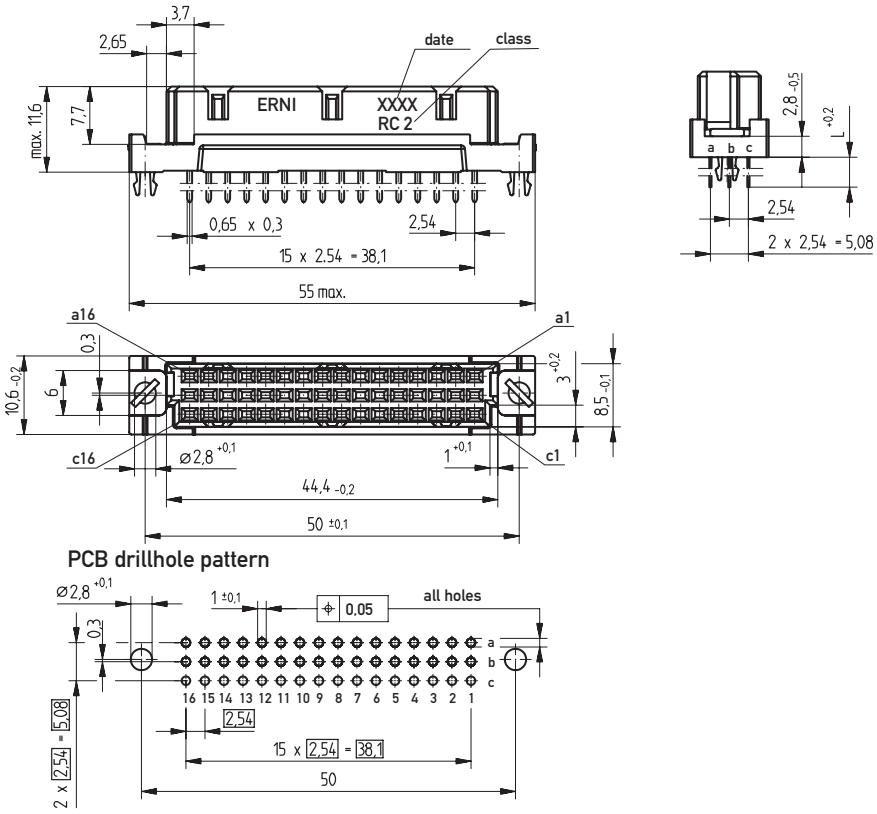

Ordering Information

No. of Pins	Termination	Term. Length	Pin Dimensions	Class	Pressfit Zone	Part Number
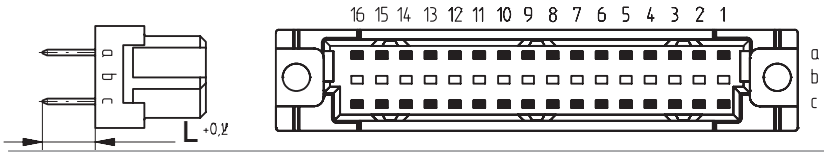						
32	Pressfit	5.5 mm	0.6 x 0.6 mm	2	–	**254854**
32	Pressfit	13 mm	0.6 x 0.6 mm	2	–	**294738**
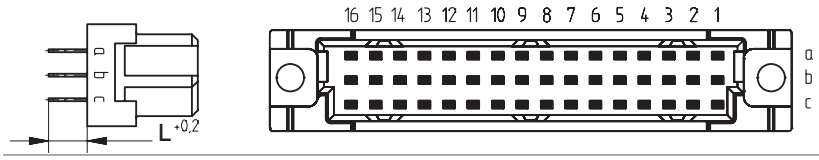						
48	Pressfit	4 mm	0.8 x 0.3 mm	2	–	**254887**
48	Pressfit	5.5 mm	0.6 x 0.6 mm	1	–	**254852**
48	Pressfit	5.5 mm	0.6 x 0.6 mm	2	–	**234647**
48	Pressfit w. Transfer Zone	13 mm	0.6 x 0.6 mm	2	–	**284136**
48	Pressfit w. Transfer Zone	17 mm	0.6 x 0.6 mm	2	–	**254896**
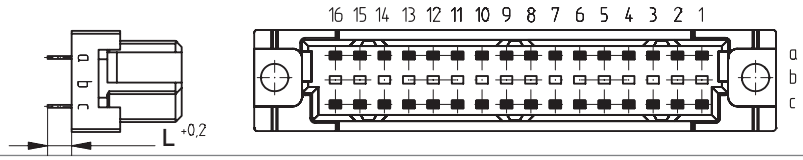						
32	Solder	2.5 mm	0.65 x 0.3 mm	2	–	**254893**
32	Solder	4 mm	0.65 x 0.3 mm	1	–	**284933**
32	Solder	4 mm	0.65 x 0.3 mm	2	–	**284171**
32	Solder	13 mm	0.6 x 0.6 mm	2	–	**284323**
32	Solder	13 mm	0.6 x 0.6 mm	2	–	**414327**

Ordering Information

No. of Pins	Termination	Term. Length	Pin Dimensions	Class	Pressfit Zone	Part Number
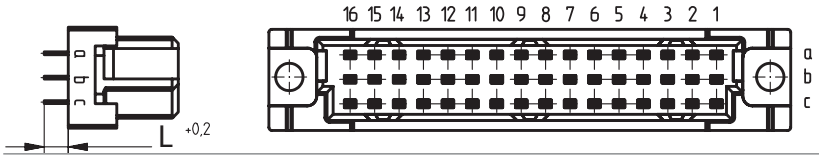						
48	Solder	2.5 mm	0.65 x 0.3 mm	1	–	**284035**
48	Solder	2.5 mm	0.65 x 0.3 mm	2	–	**254498**
48	Solder w/o Flange	2.5 mm	0.65 x 0.3 mm	2	–	**284942**
48	Solder	4 mm	0.65 x 0.3 mm	2	–	**284174**
48	Solder w/o Flange	4 mm	0.65 x 0.3 mm	2	–	**284175**
48	Solder	4 mm	0.65 x 0.3 mm	1	–	**254895**
48	Solder with Clip	4 mm	0.65 x 0.3 mm	2	–	**284944**
48	Solder	13 mm	0.6 x 0.6 mm	1	–	**284941**
48	Solder	13 mm	0.6 x 0.6 mm	2	–	**284172**
48	Solder	17 mm	0.6 x 0.6 mm	2	–	**284938**
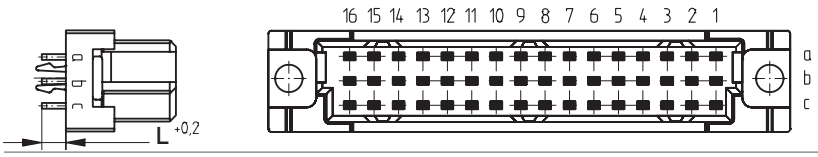						
48	THR with Clip	2.5 mm	0.6 x 0.6 mm	2	–	**254970**

DIN 41612 / IEC 60603-2 Connectors

Type C/3 Female

Dimensional Drawing Pressfit

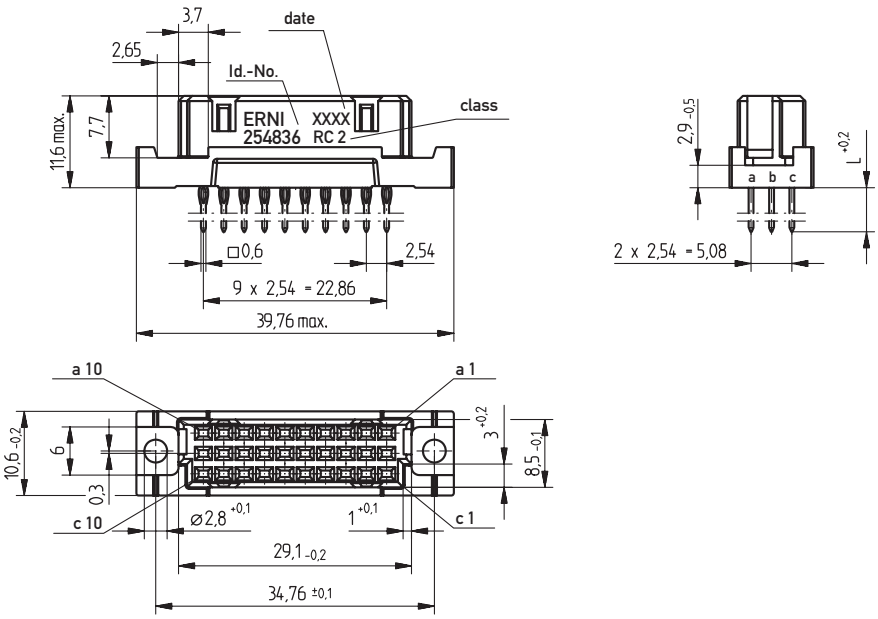

PCB drillhole pattern

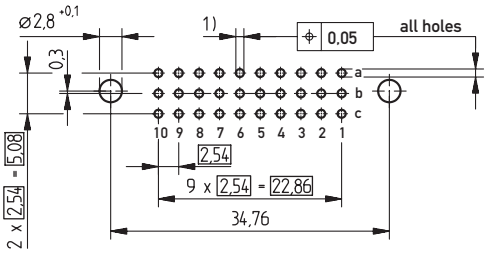

1) ø 1,0 $^{+0,09}_{-0,06}$ Diameter of finished plated-through hole
ø 1,15 ±0,025 Diameter of drilled hole

Dimensional Drawing Solder

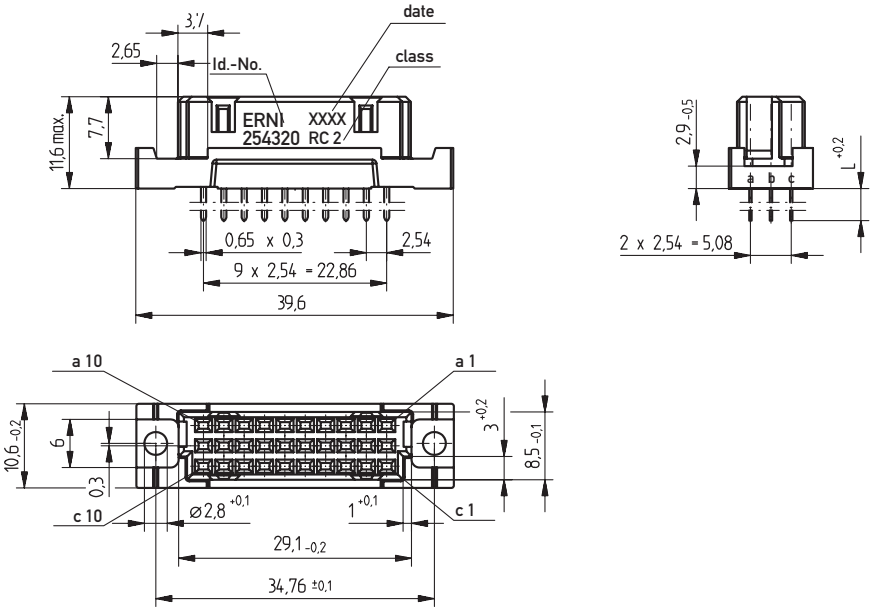

PCB drillhole pattern

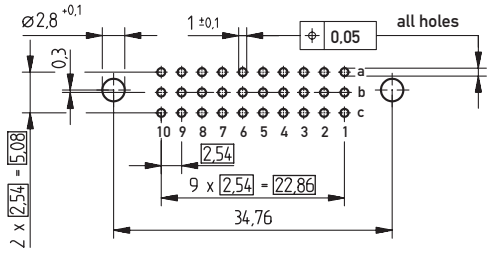

Ordering Information

No. of Pins	Termination	Term. Length	Pin Dimensions	Class	Pressfit Zone	Part Number
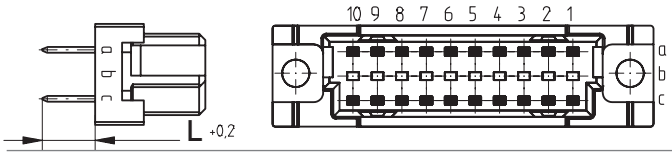						
20	Pressfit	5.5 mm	0.6 x 0.6 mm	2	–	**254838**
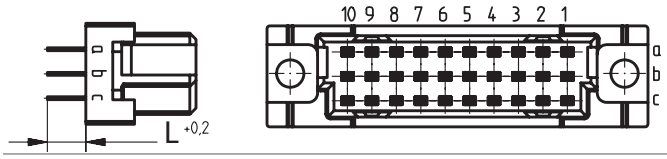						
30	Pressfit	4 mm	0.8 x 0.3 mm	2	–	**254995**
30	Pressfit	5.5 mm	0.6 x 0.6 mm	2	–	**254836**
30	Pressfit w/o Flange	5.5 mm	0.6 x 0.6 mm	2	–	**254321**
30	Pressfit w. Transfer Zone	13 mm	0.6 x 0.6 mm	2	–	**284176**
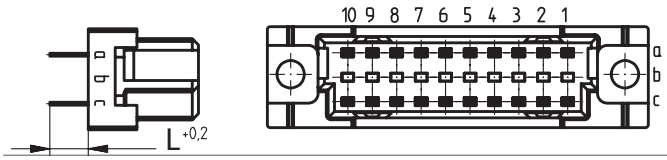						
20	Solder	4 mm	0.65 x 0.3 mm	2	–	**284318**
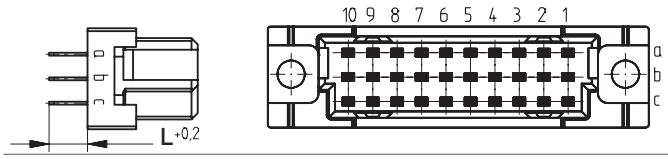						
30	Solder	4 mm	0.65 x 0.3 mm	2	–	**254320**
30	Solder	13 mm	0.6 x 0.6 mm	2	–	**284173**

DIN 41612 / IEC 60603-2 Connectors

Type R Male

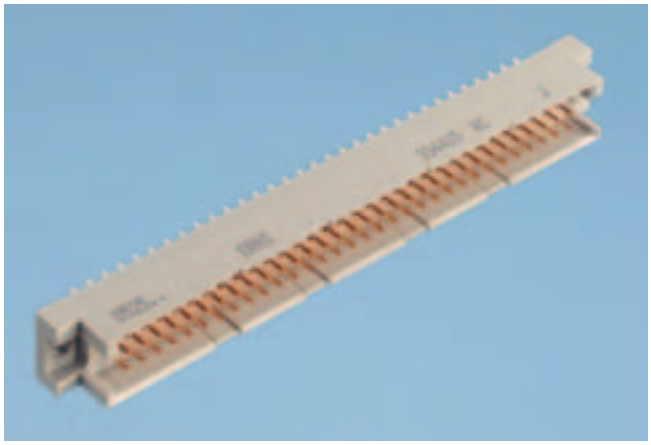

Dimensional Drawing Pressfit

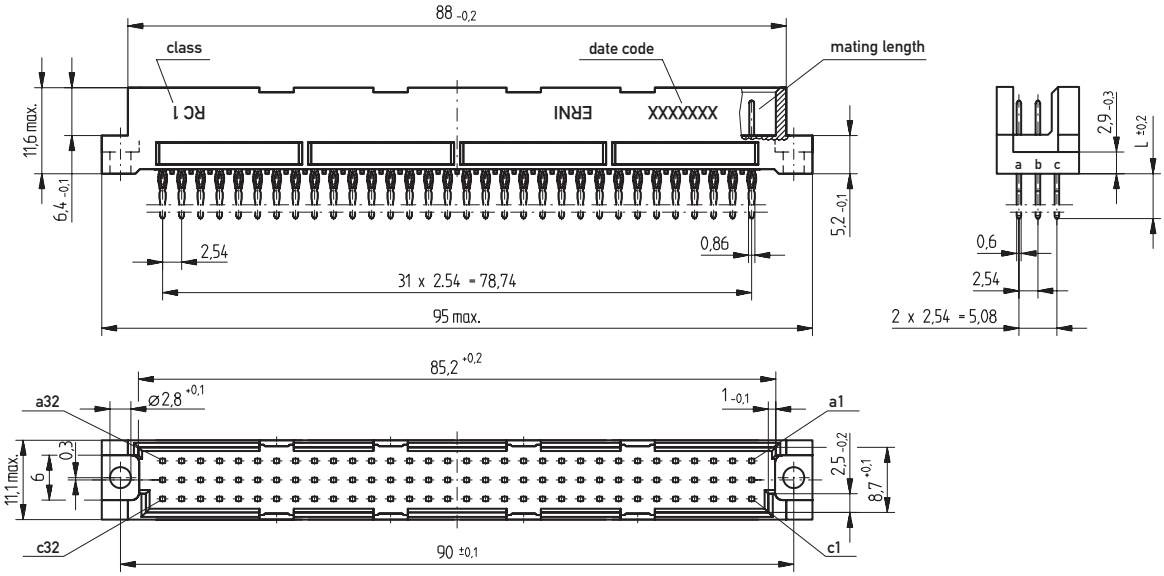

PCB drillhole pattern

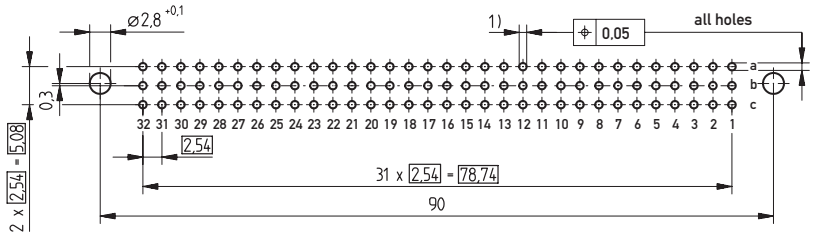

1) ø 1,0 $^{+0,02}_{-0,06}$ Diameter of finished plated-through hole
ø 1,15 $^{\pm 0,025}$ Diameter of drilled hole

DIN 41612 / IEC 60603-2 Connectors

Type R Male

Dimensional Drawing Solder

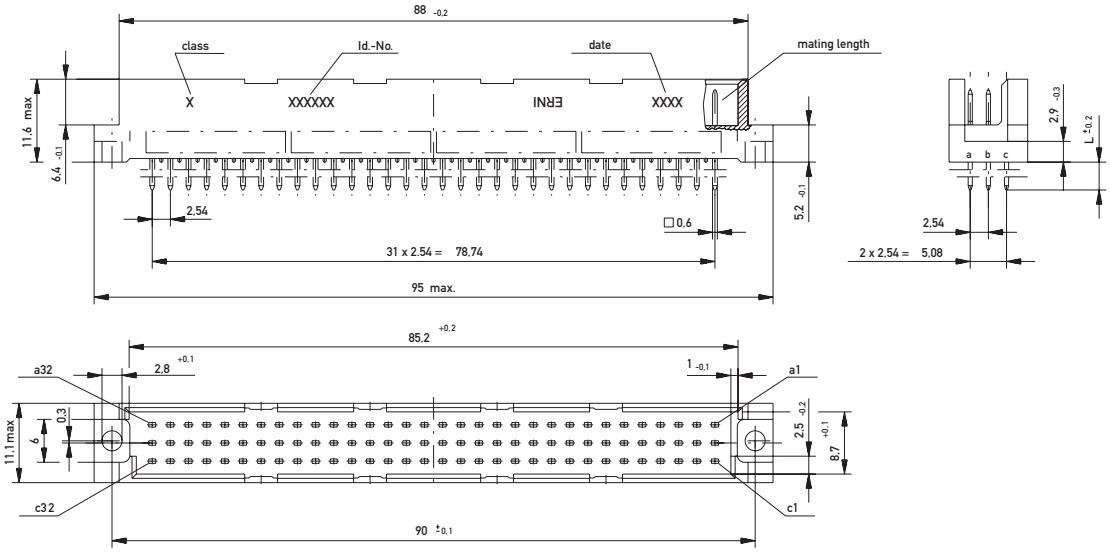

PCB drillhole pattern

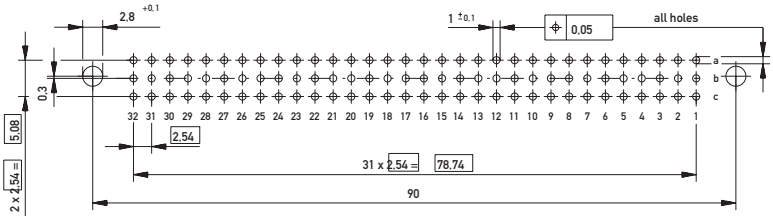

Dimensional Drawing THR

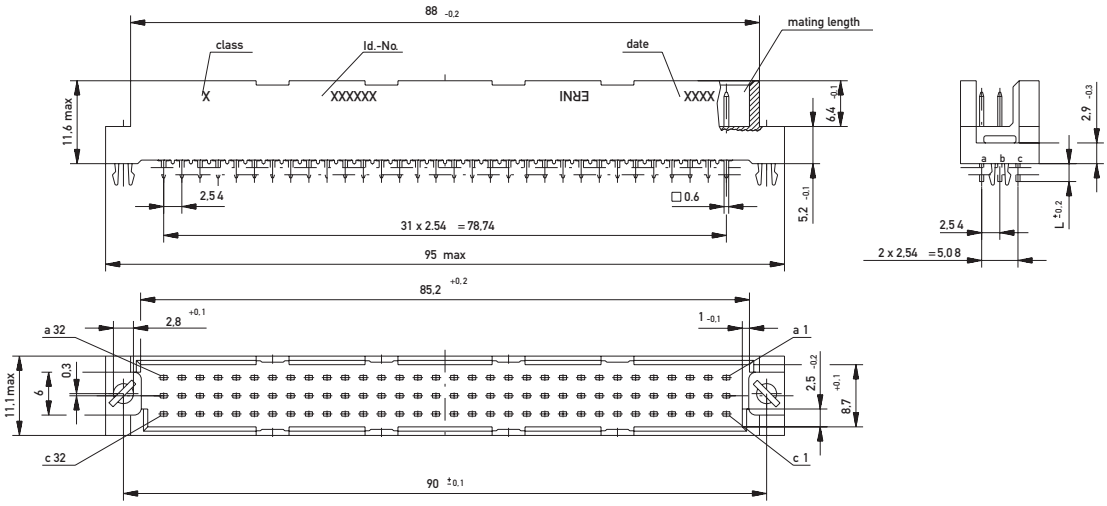

PCB drillhole pattern

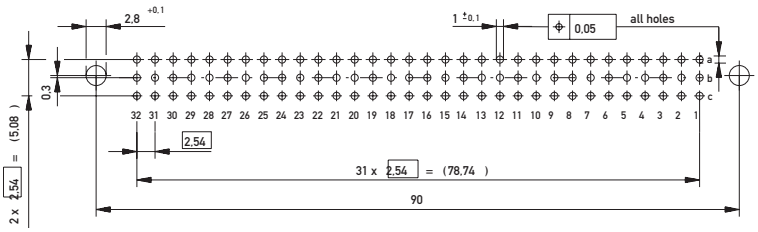

DIN 41612 / IEC 60603-2 Connectors

Type R Male

Ordering Information

No. of Pins	Termination	Term. Length	Pin Dimensions	Class	Pressfit Zone	Part Number
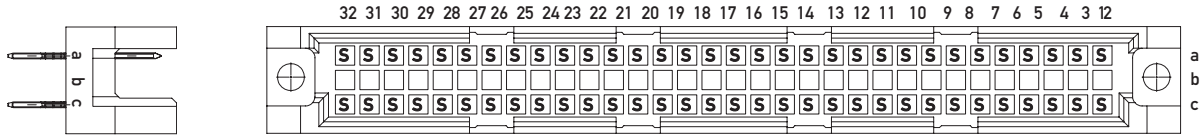						
64	Pressfit	6 mm	0.6 x 0.6 mm	1	–	**354385**
64	Pressfit	6 mm	0.86 x 0.6 mm	2	–	**234713**
64	Pressfit w. Transfer Zone	13 mm	0.6 x 0.6 mm	2	–	**354381**
64	Pressfit	20 mm	0.6 x 0.6 mm	2	–	**354395**
64	Pressfit w. Transfer Zone	20 mm	0.6 x 0.6 mm	2	–	**354400**
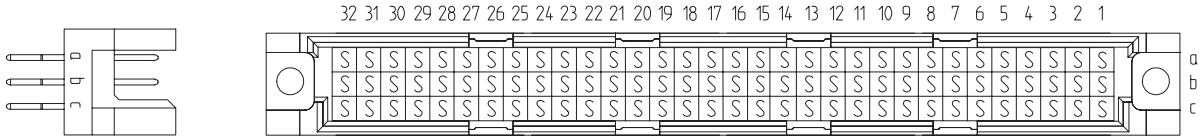						
96	Pressfit	6 mm	0.86 x 0.6 mm	1	–	**354418**
96	Pressfit	6 mm	0.86 x 0.6 mm	2	–	**234712**
96	Pressfit w. Transfer Zone	13 mm	0.6 x 0.6 mm	2	–	**284420**
96	Pressfit	20 mm	0.86 x 0.6 mm	1	–	**354396**
96	Pressfit	20 mm	0.86 x 0.6 mm	2	–	**354399**
96	Pressfit w. Transfer Zone	20 mm	0.6 x 0.6 mm	1	2.5 mm	**414702**
96	Pressfit w. Transfer Zone	20 mm	0.86 x 0.6 mm	2	–	**254141**

DIN 41612 / IEC 60603-2 Connectors

Type R Male

Ordering Information

No. of Pins	Termination	Term. Length	Pin Dimensions	Class	Pressfit Zone	Part Number
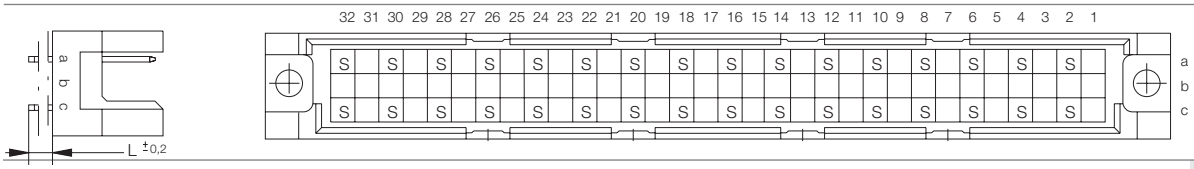						
32	Solder	4 mm	0.6 x 0.6 mm	1	–	**304225**
32	Solder	4 mm	0.6 x 0.6 mm	2	–	**304425**
32	Solder	13 mm	0.6 x 0.6 mm	1	–	**304221**
32	Solder	13 mm	0.6 x 0.6 mm	2	–	**304421**
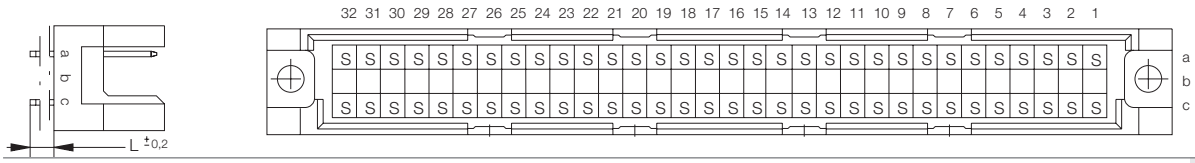						
64	Solder	4 mm	0.6 x 0.6 mm	1	–	**334214**
64	Solder	4 mm	0.6 x 0.6 mm	2	–	**334414**
64	Solder	13 mm	0.6 x 0.6 mm	1	–	**334210**
64	Solder	13 mm	0.6 x 0.6 mm	2	–	**334410**
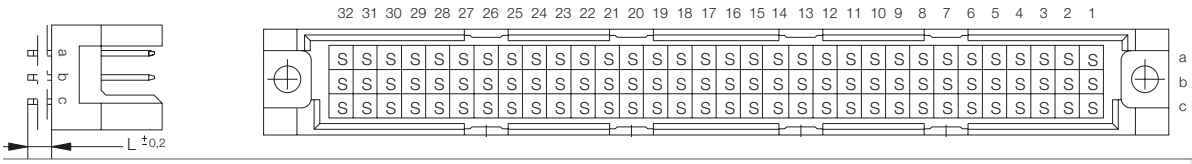						
96	Solder	4 mm	0.6 x 0.6 mm	1	–	**334215**
96	Solder	4 mm	0.6 x 0.6 mm	2	–	**334415**
96	Solder	13 mm	0.6 x 0.6 mm	1	–	**334211**
96	Solder	13 mm	0.6 x 0.6 mm	2	–	**334411**

Ordering Information

No. of Pins	Termination	Term. Length	Pin Dimensions	Class	Pressfit Zone	Part Number
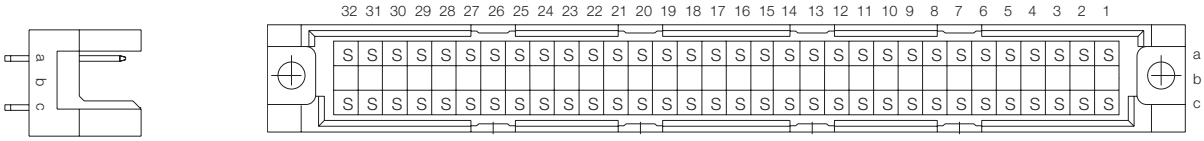						
64	THR	2.5 mm	0.6 x 0.6 mm	2	–	**194576**
64	THR with Clip	2.5 mm	0.6 x 0.6 mm	2	–	**194578**
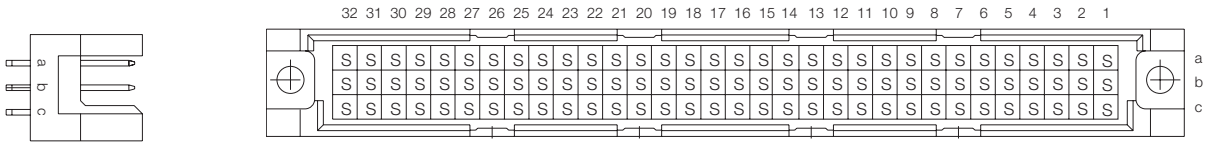						
96	THR	2.5 mm	0.6 x 0.6 mm	2	–	**164306**
96	THR with Clip	2.5 mm	0.6 x 0.6 mm	2	–	**154961**

DIN 41612 / IEC 60603-2 Connectors

Type R/2 Male

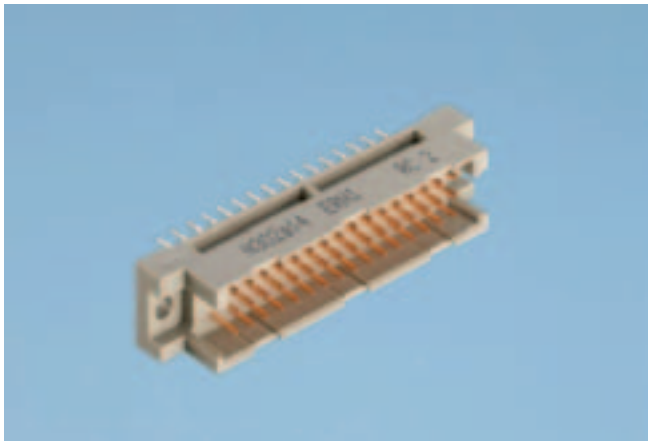

Dimensional Drawing Pressfit

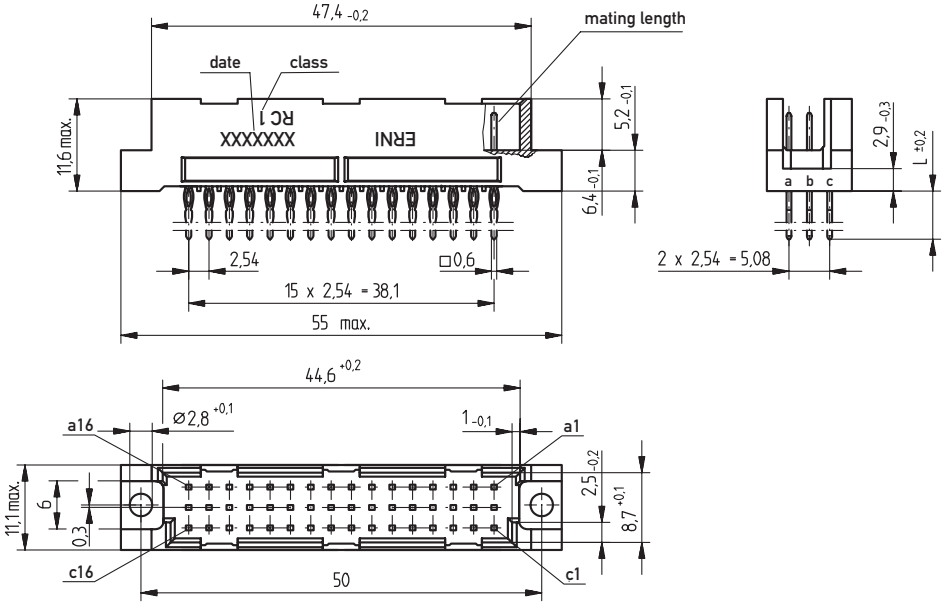

PCB drillhole pattern

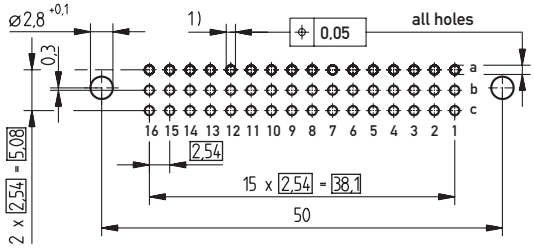

1) ø 1,0 $^{+0.09}_{-0.06}$ Diameter of finished plated-through hole
ø 1,15 $^{\pm 0.025}$ Diameter of drilled hole

DIN 41612 / IEC 60603-2 Connectors

Type R/2 Male

Dimensional Drawing Solder

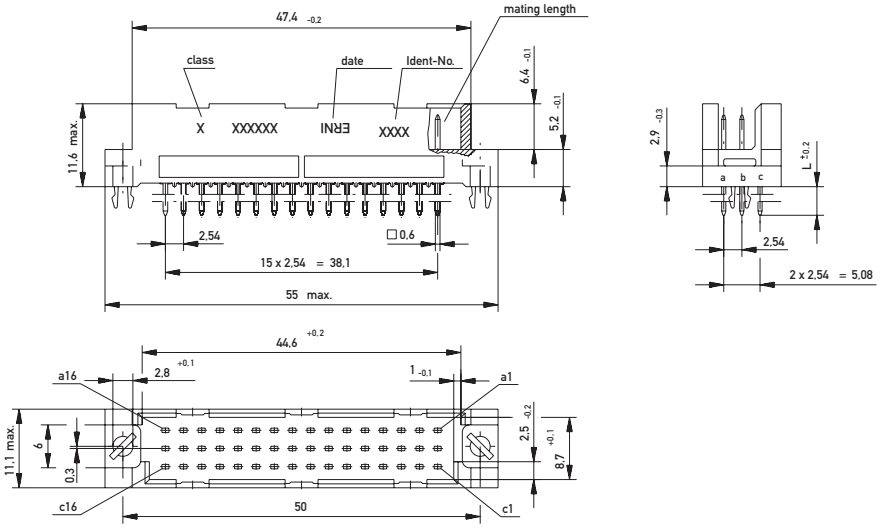

PCB drillhole pattern

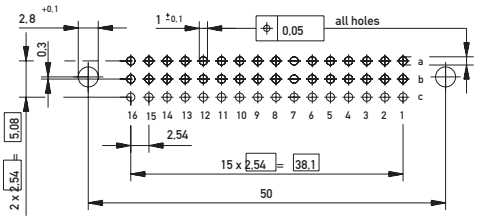

Dimensional Drawing THR

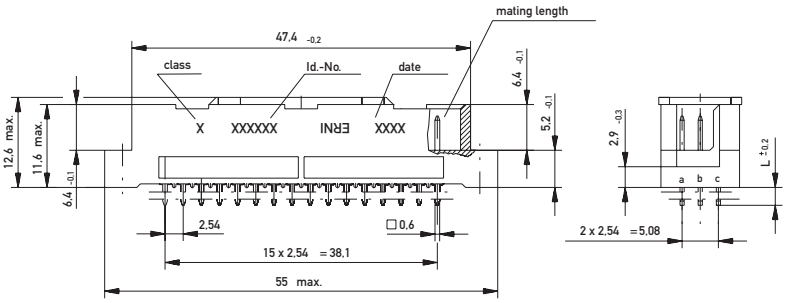

PCB drillhole pattern

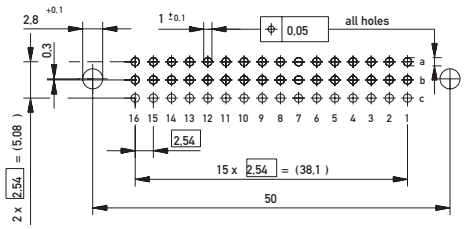

Ordering Information

No. of Pins	Termination	Term. Length	Pin Dimensions	Class	Pressfit Zone	Part Number
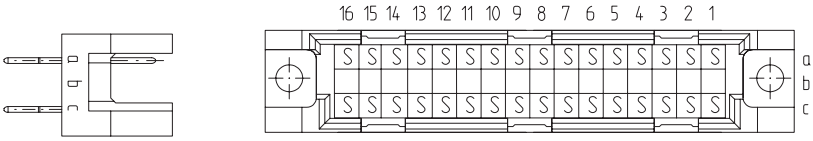						
32	Pressfit	6 mm	0.6 x 0.6 mm	2	–	**284272**
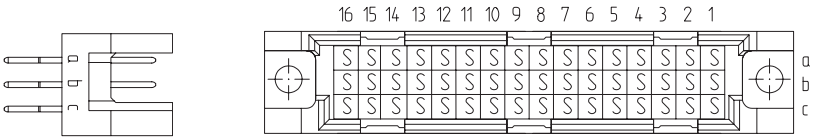						
48	Pressfit	6 mm	0.6 x 0.6 mm	1	–	**354406**
48	Pressfit	6 mm	0.6 x 0.6 mm	2	–	**354382**
48	Pressfit w. Transfer Zone	13 mm	0.6 x 0.6 mm	1		**354397**
48	Pressfit	20 mm	0.6 x 0.6 mm	2	–	**354384**
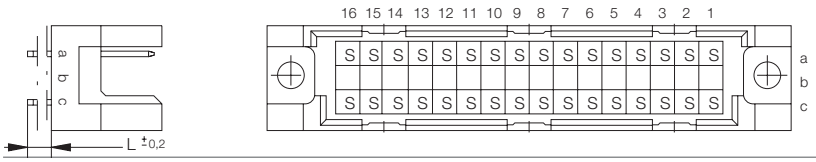						
32	Solder	4 mm	0.6 x 0.6 mm	2	–	**004485**
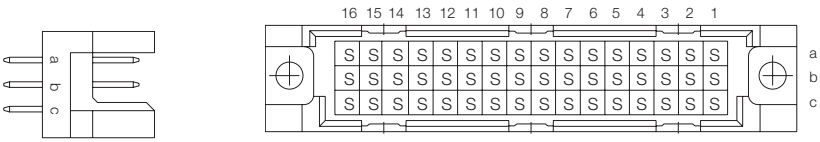						
48	Solder	4 mm	0.6 x 0.6 mm	2	–	**004484**
48	Solder with Clip	4 mm	0.6 x 0.6 mm	2	–	**063277**
48	Solder	13 mm	0.6 x 0.6 mm	2	–	**424201**
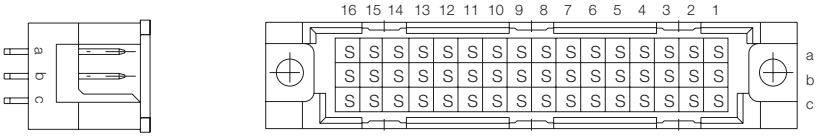						
48	THR	2.5 mm	0.6 x 0.6 mm	2	–	**154964**
48	THR with Clip	2.5 mm	0.6 x 0.6 mm	2	–	**144710**

DIN 41612 / IEC 60603-2 Connectors

Type R/3 Male

Dimensional Drawing Pressfit

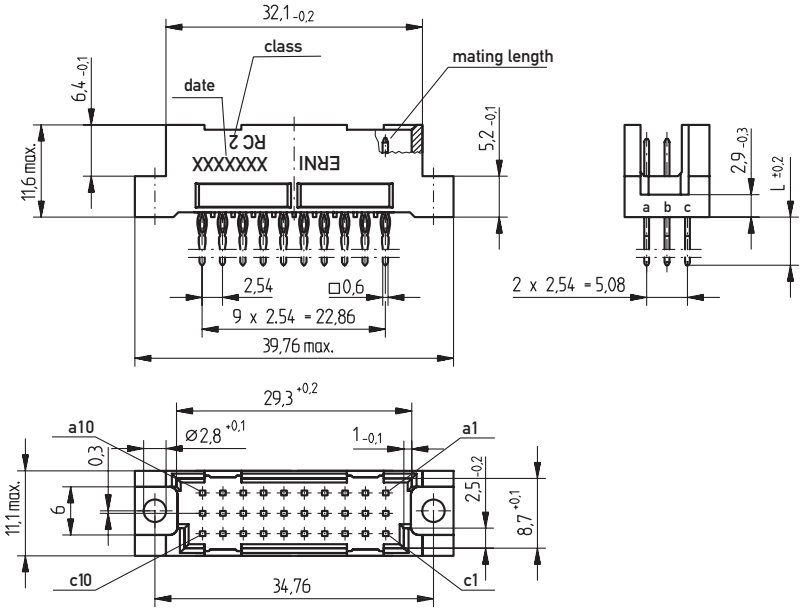

PCB drillhole pattern

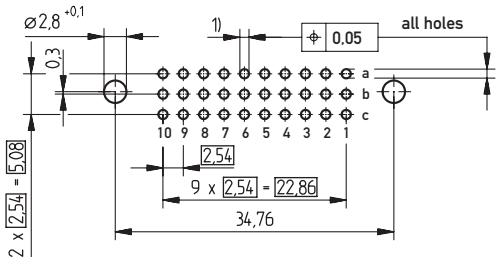

1) ø 1,0 $^{+0,09}_{-0,06}$ Diameter of finished plated-through hole
ø 1,15 $^{\pm 0,025}$ Diameter of drilled hole

Dimensional Drawing Solder

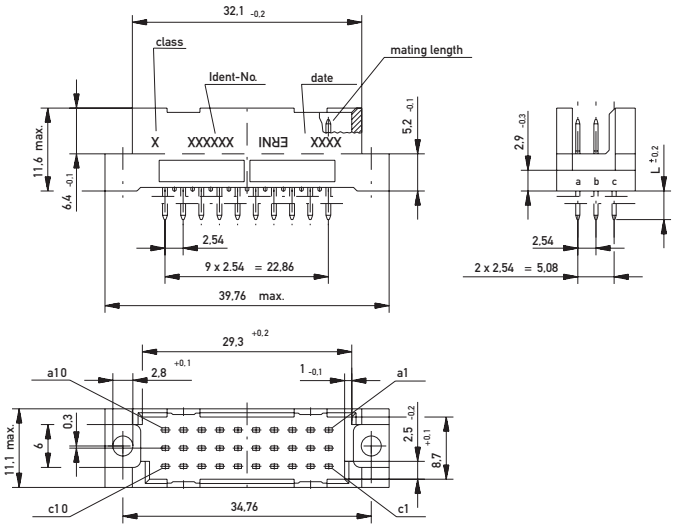

PCB drillhole pattern

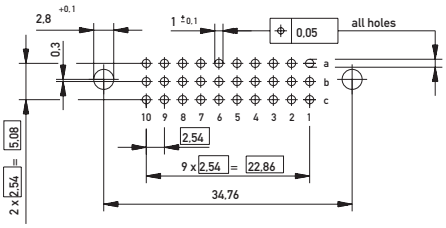

Dimensional Drawing THR

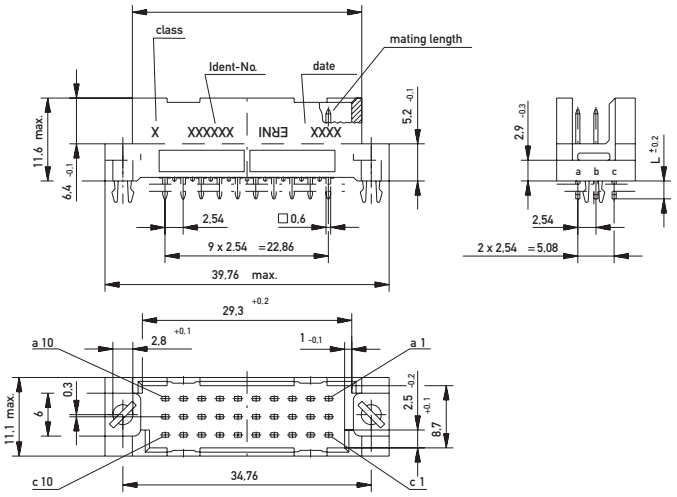

PCB drillhole pattern

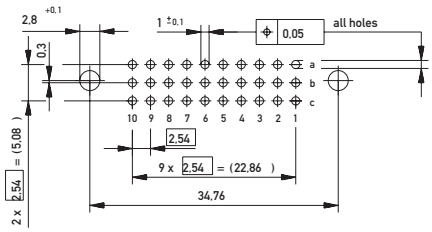

DIN 41612 / IEC 60603-2 Connectors

Type R/3 Male

Ordering Information

No. of Pins	Termination	Term. Length	Pin Dimensions	Class	Pressfit Zone	Part Number
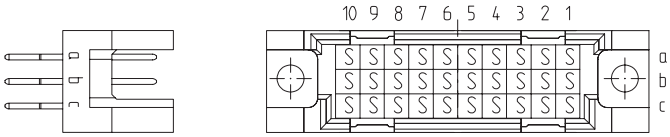						
30	Pressfit	6 mm	0.6 x 0.6 mm	2	–	**354383**
30	Pressfit w. Transfer Zone	20 mm	0.6 x 0.6 mm	2		**354388**
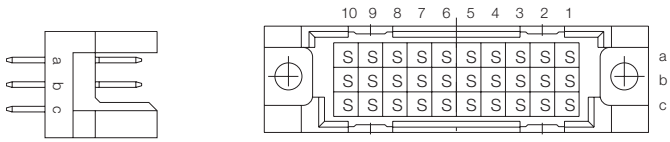						
30	Solder	4 mm	0.6 x 0.6 mm	2	–	**004500**
30	Solder	13 mm	0.6 x 0.6 mm	2	–	**424195**
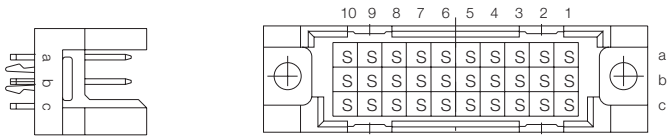						
30	THR with Clip	2.5 mm	0.6 x 0.6 mm	2	–	**144708**

DIN 41612 / IEC 60603-2 Connectors

Type R Female

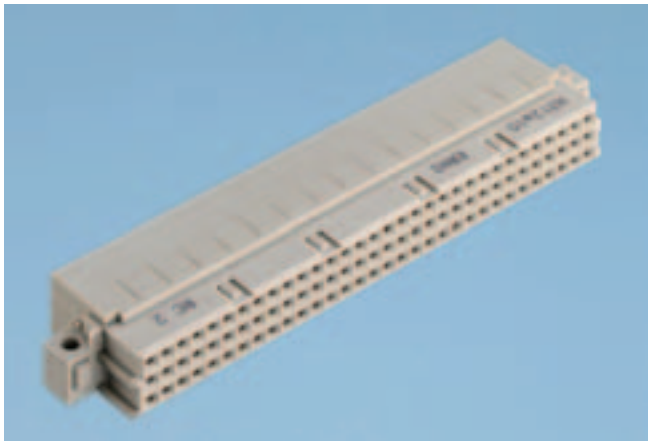

Dimensional Drawing Pressfit

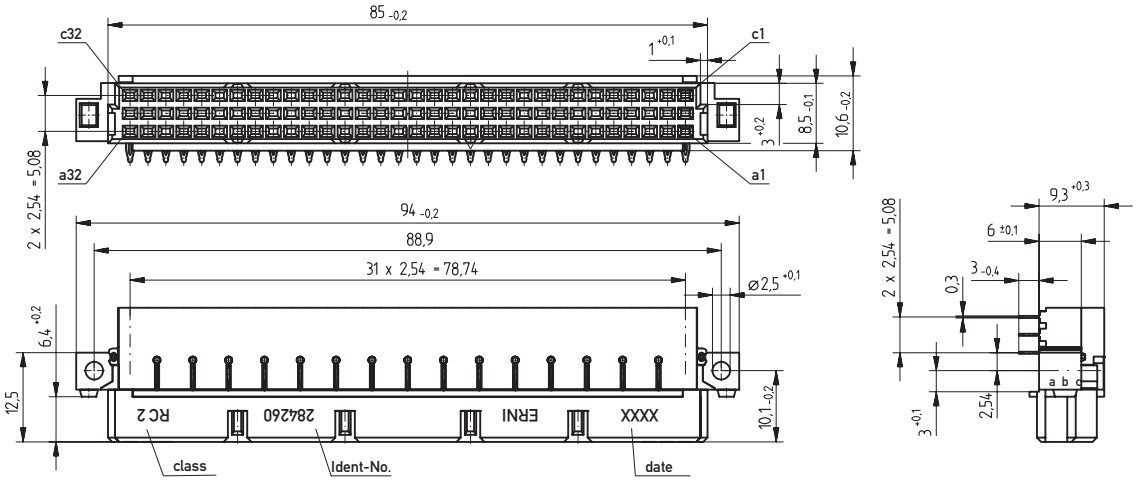

PCB drillhole pattern

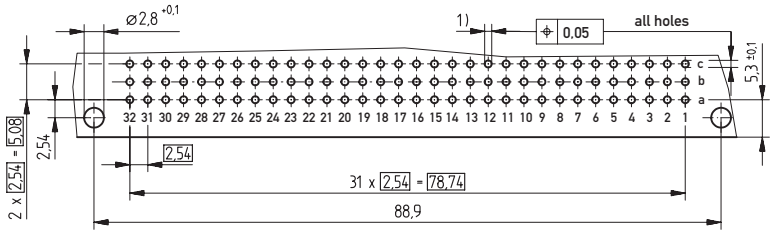

1) ø 1,0 ±0,09/0,06 Diameter of finished plated-through hole
ø 1,15 ±0,025 Diameter of drilled hole

Dimensional Drawing Solder

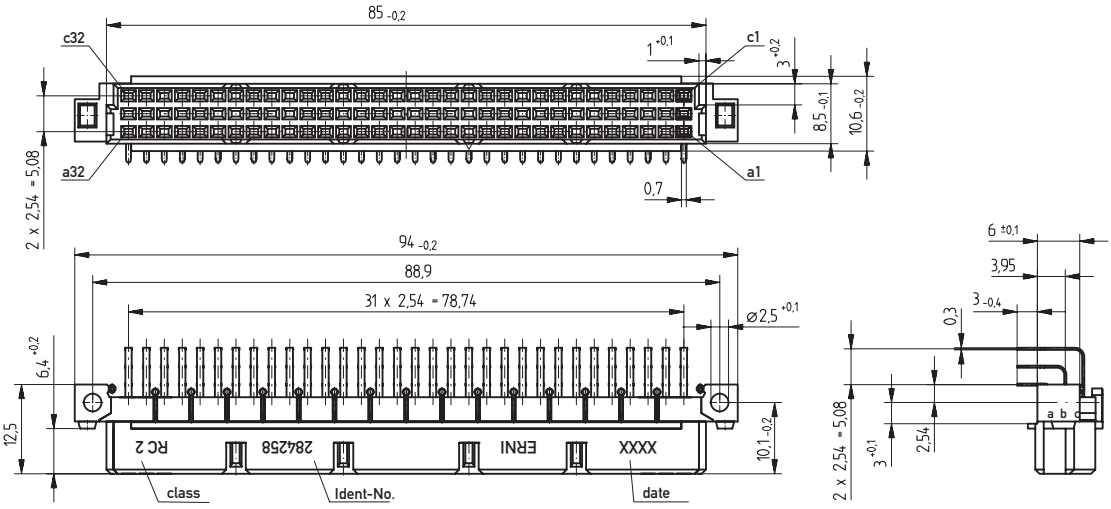

PCB drillhole pattern

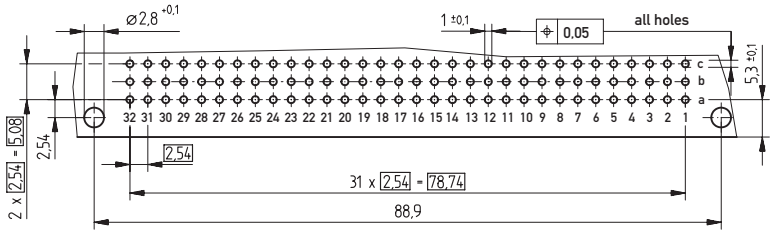

Dimensional Drawing THR

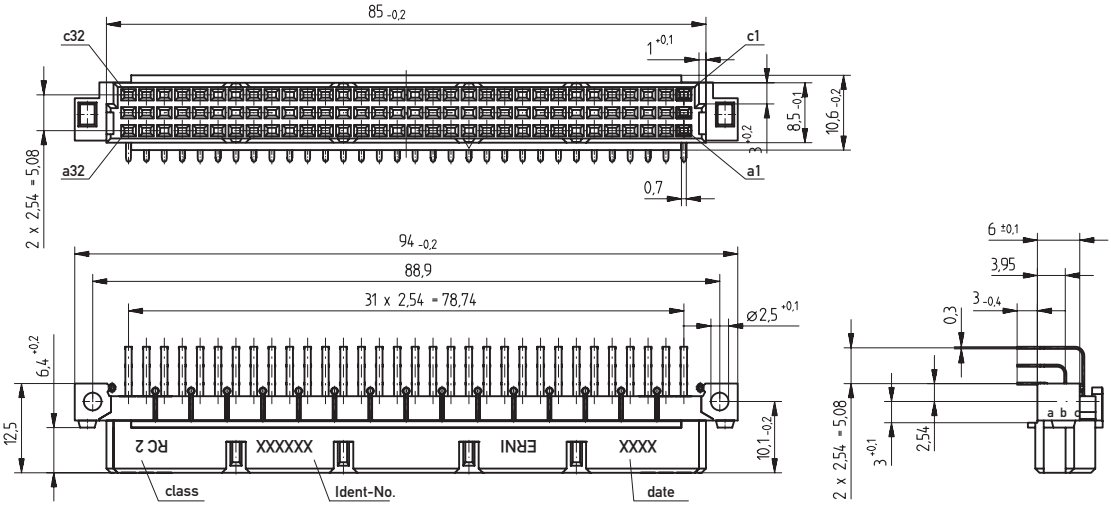

PCB drillhole pattern

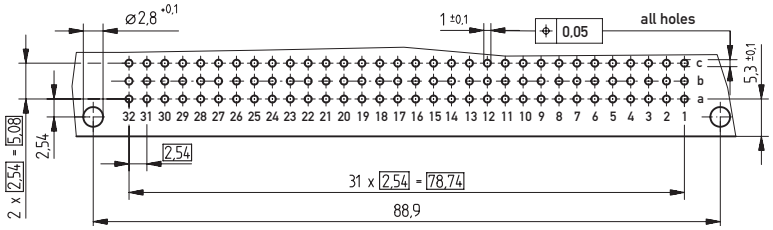

Ordering Information

No. of Pins	Termination	Term. Length	Pin Dimensions	Class	Pressfit Zone	Part Number
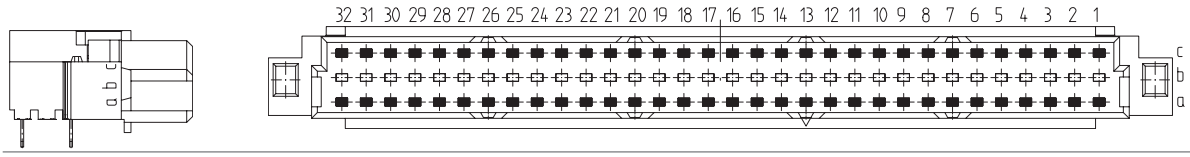						
64	Pressfit	3 mm	0.7 x 0.3 mm	2	–	**284262**
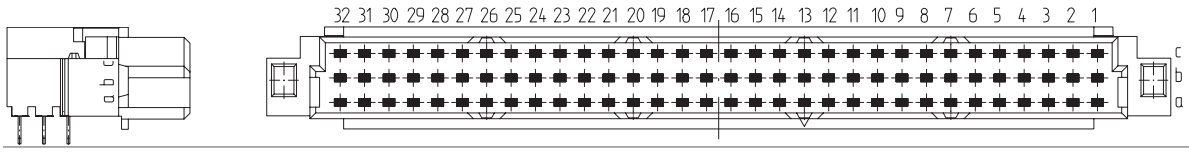						
96	Pressfit	3 mm	0.7 x 0.3 mm	2	–	**284260**
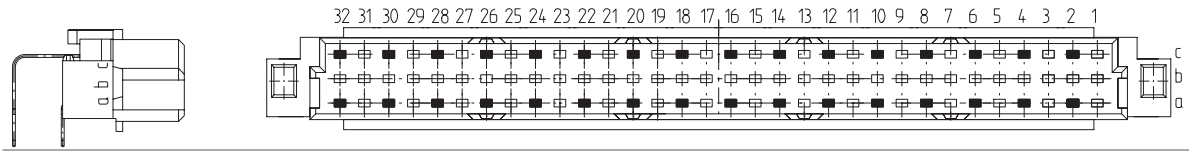						
32	Solder	3 mm	0.7 x 0.3 mm	2	–	**284261**
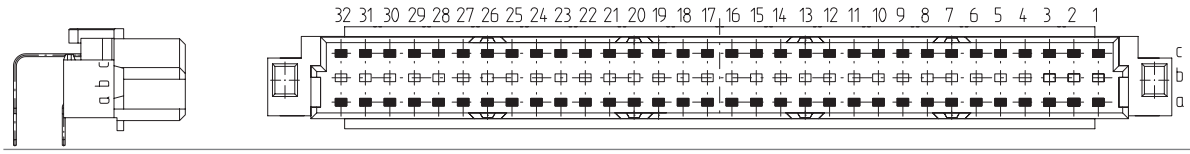						
64	Solder	3 mm	0.7 x 0.3 mm	2	–	**284259**
64	Solder with Clip	3 mm	0.7 x 0.3 mm	2	–	**284263**
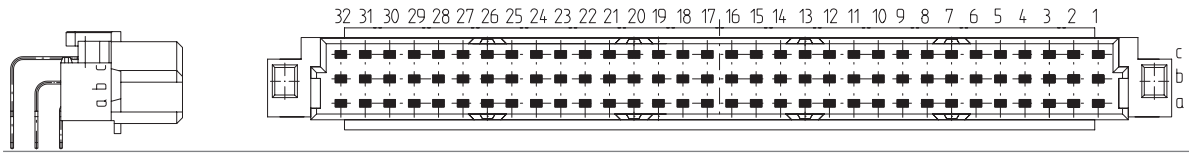						
96	Solder	3 mm	0.7 x 0.3 mm	1	–	**354135**
96	Solder	3 mm	0.7 x 0.3 mm	2	–	**284258**
96	Solder with Clip	3 mm	0.7 x 0.3 mm	2	–	**284264**

Ordering Information

No. of Pins	Termination	Term. Length	Pin Dimensions	Class	Pressfit Zone	Part Number
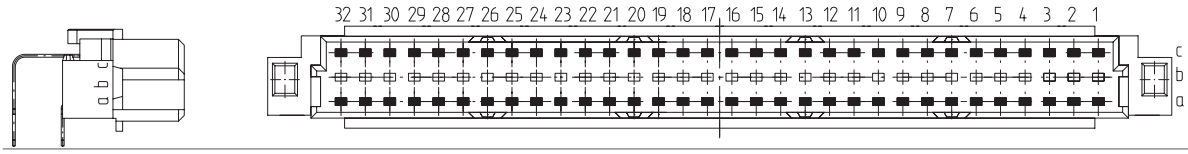						
64	THR	3 mm	0.7 x 0.3 mm	2	–	**284270**
64	THR with Clip	3 mm	0.7 x 0.3 mm	2	–	**284653**
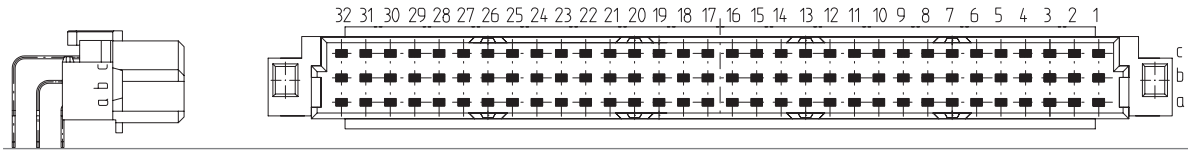						
96	THR	3 mm	0.7 x 0.3 mm	2	–	**244139**
96	THR with Clip	3 mm	0.7 x 0.3 mm	2	–	**284269**

DIN 41612 / IEC 60603-2 Connectors

Type R/2 Female

Dimensional Drawing Pressfit

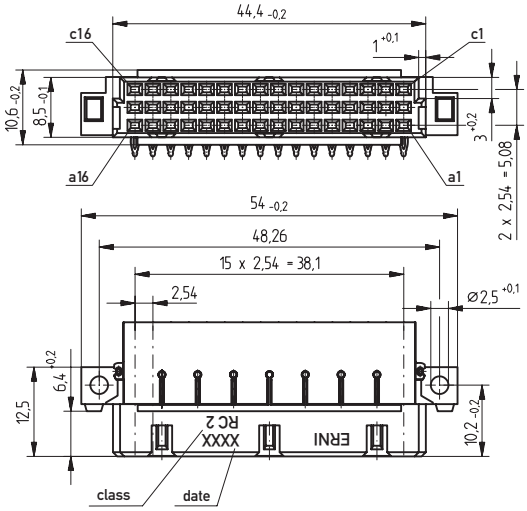

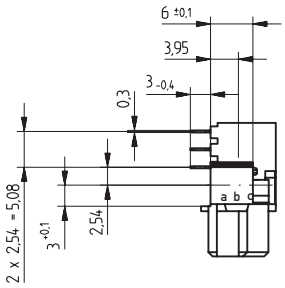

PCB drillhole pattern

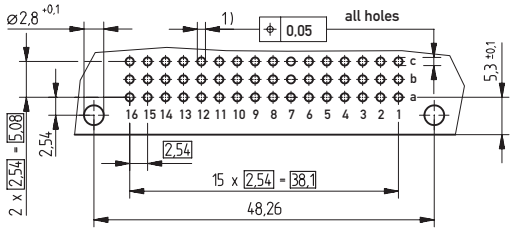

1) ø 1,0 $^{+0,09}_{-0,06}$ Diameter of finished plated-through hole
ø 1,15 ±0,025 Diameter of drilled hole

DIN 41612 / IEC 60603-2 Connectors

Type R/2 Female

Dimensional Drawing Solder

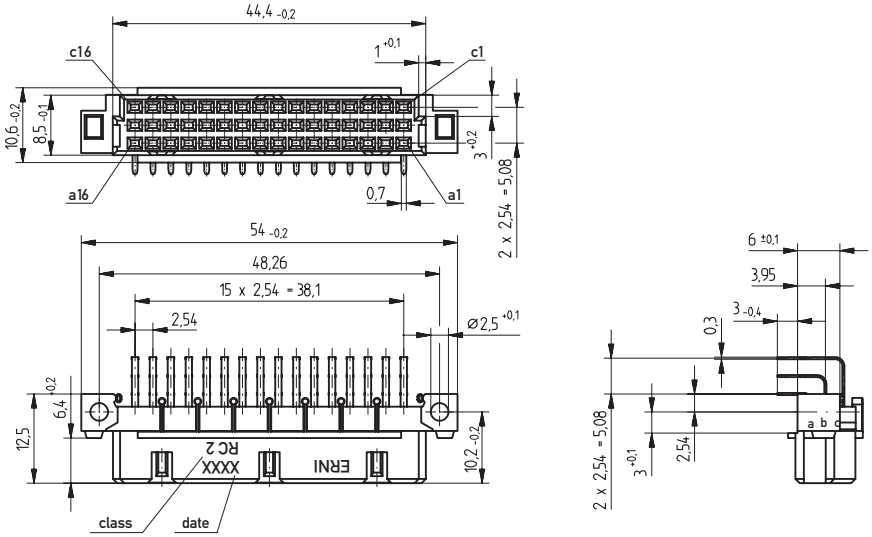

PCB drillhole pattern

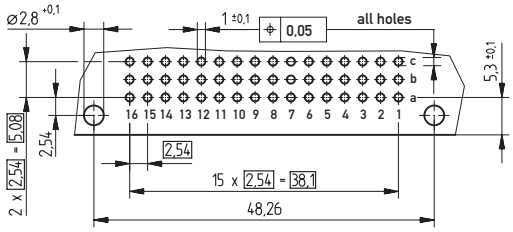

Dimensional Drawing THR

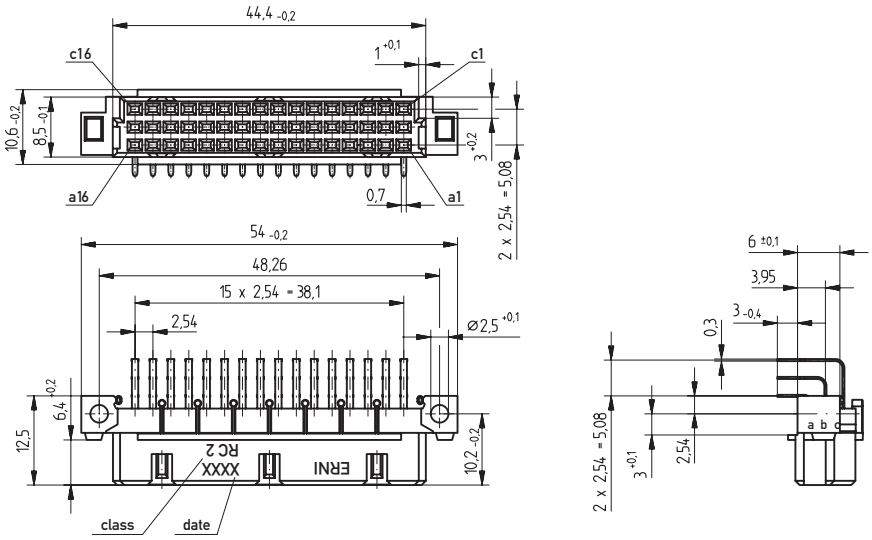

PCB drillhole pattern

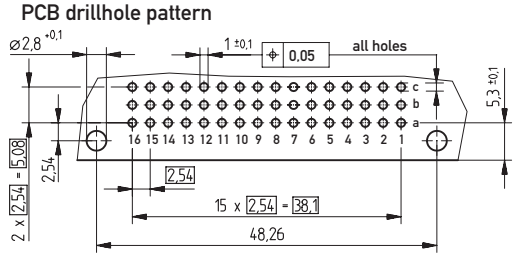

Ordering Information

No. of Pins	Termination	Term. Length	Pin Dimensions	Class	Pressfit Zone	Part Number
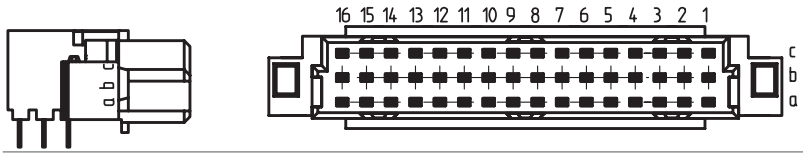						
48	Pressfit	3 mm	0.7 x 0.3 mm	2	–	**354159**
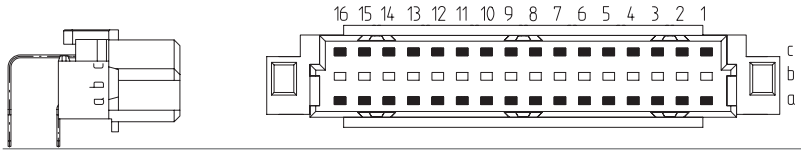						
32	Solder	3 mm	0.7 x 0.3 mm	2	–	**284324**
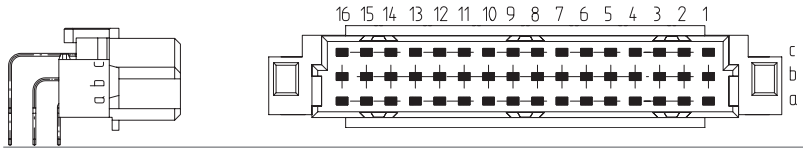						
48	Solder	3 mm	0.7 x 0.3 mm	1	–	**354251**
48	Solder	3 mm	0.7 x 0.3 mm	2	–	**284325**
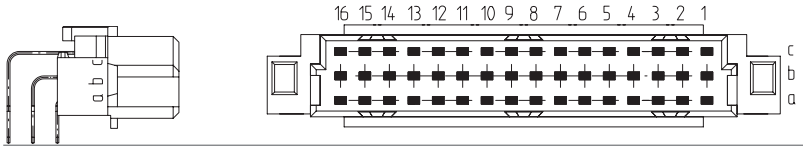						
48	THR	3 mm	0.7 x 0.3 mm	2	–	**354134**
48	THR with Clip	3 mm	0.7 x 0.3 mm	2	–	**354220**

DIN 41612 / IEC 60603-2 Connectors

Type R/3 Female

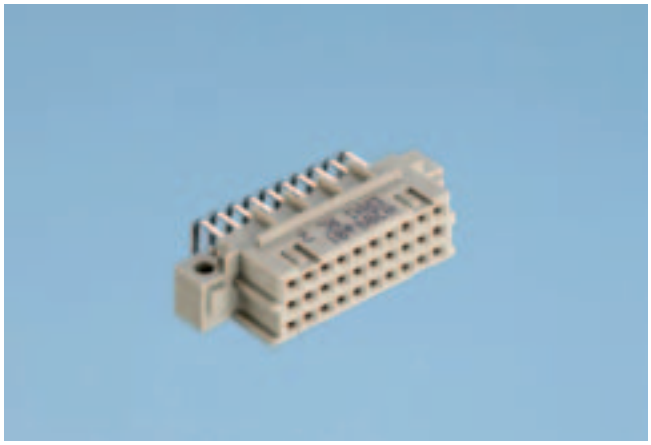

Dimensional Drawing Pressfit

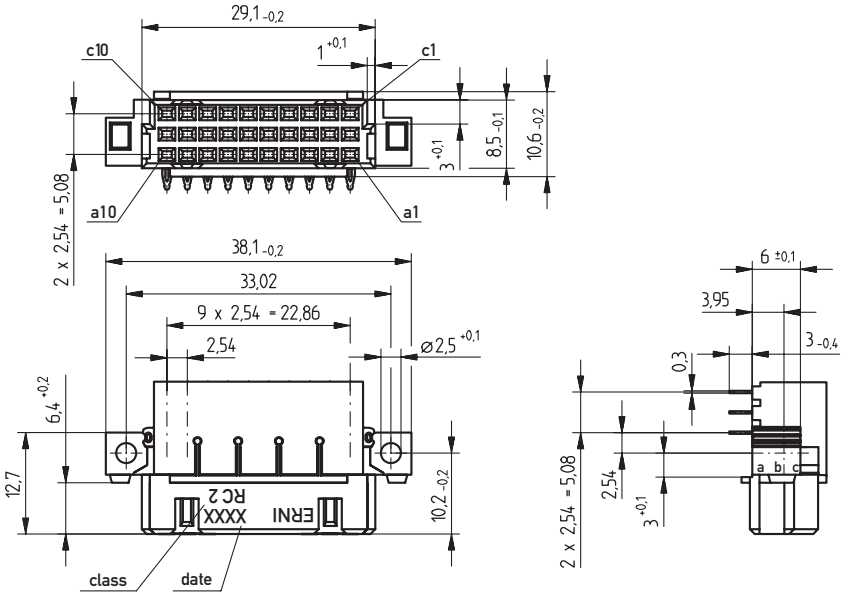

PCB drillhole pattern

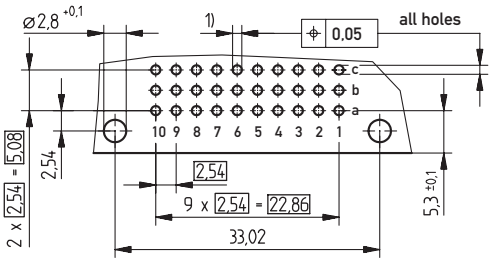

1) ø 1,0 $^{+0,09}_{-0,06}$ Diameter of finished plated-through hole
ø 1,15 ±0,025 Diameter of drilled hole

Dimensional Drawing Solder

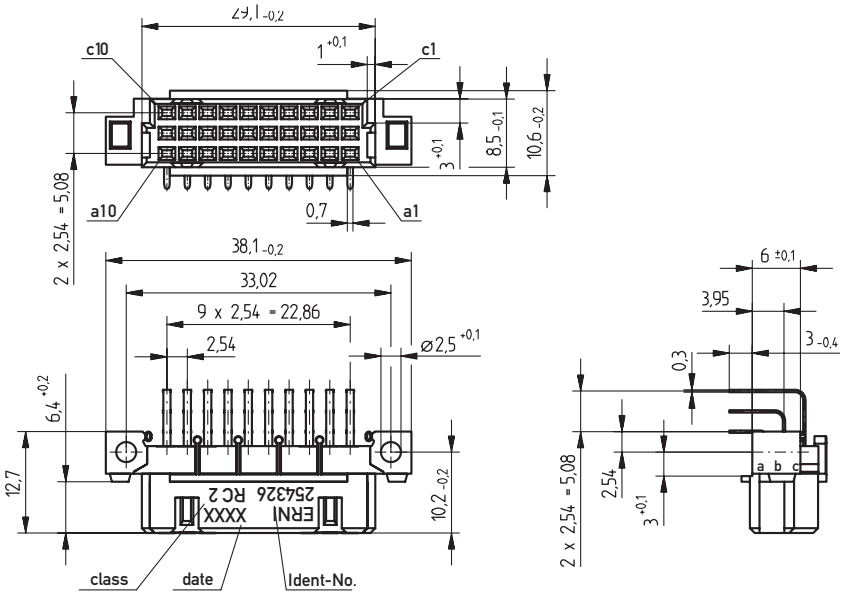

PCB drillhole pattern

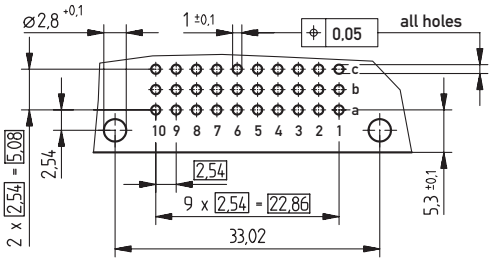

DIN 41612 / IEC 60603-2 Connectors

Type R/3 Female

Ordering Information

No. of Pins	Termination	Term. Length	Pin Dimensions	Class	Pressfit Zone	Part Number
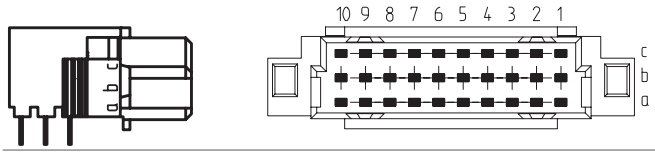						
30	Pressfit	3 mm	0.7 x 0.3 mm	2	–	**294863**
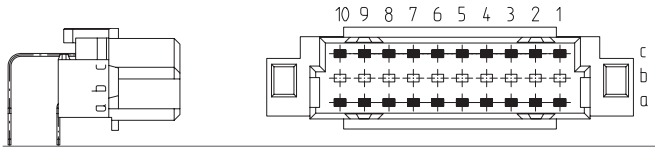						
20	Solder	3 mm	0.7 x 0.3 mm	2	–	**284419**
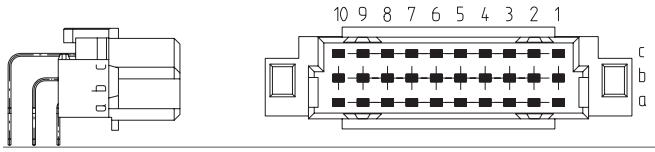						
30	Solder	3 mm	0.7 x 0.3 mm	1	–	**294716**
30	Solder	3 mm	0.7 x 0.3 mm	2	–	**254326**

DIN 41612 / IEC 60603-2 Connectors

Type CD Male

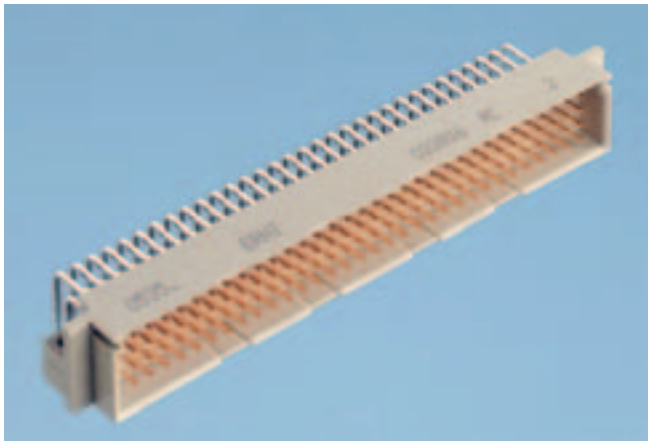

Dimensional Drawing Pressfit

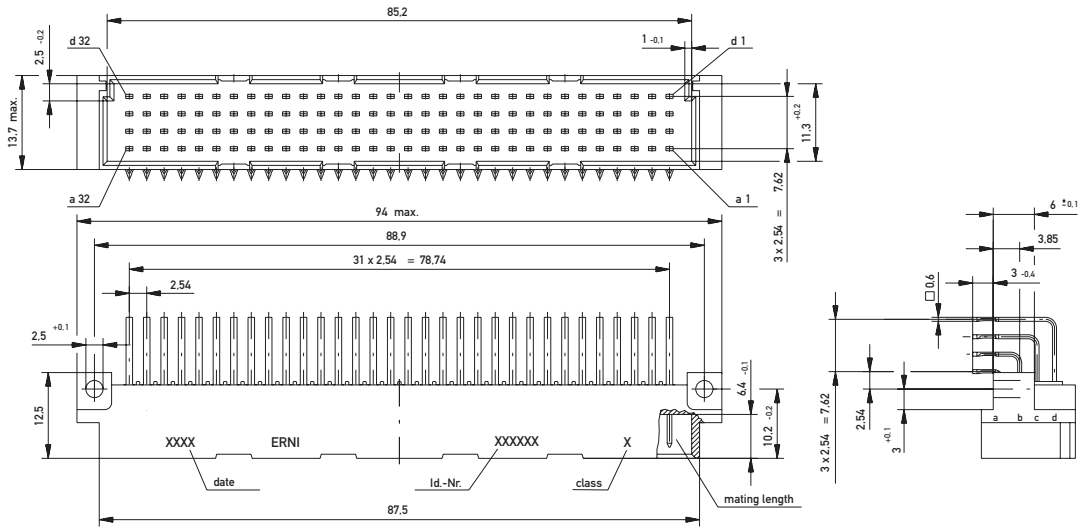

PCB drillhole pattern

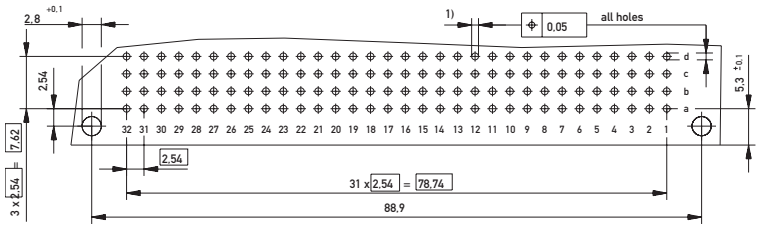

1) ø 1,0 $^{+0,09}_{-0,06}$ Diameter of finished plated-through hole
ø 1,15 ±0,025 Diameter of drilled hole

DIN 41612 / IEC 60603-2 Connectors

Type CD Male

Dimensional Drawing Solder

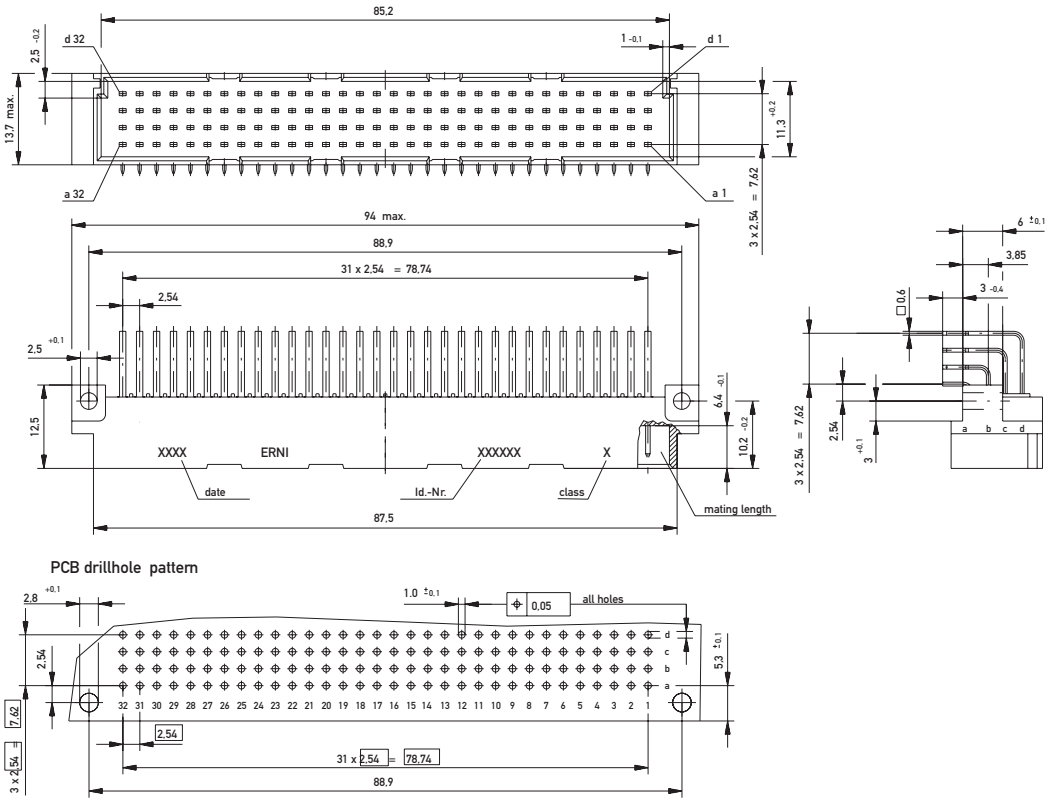

Dimensional Drawing THR

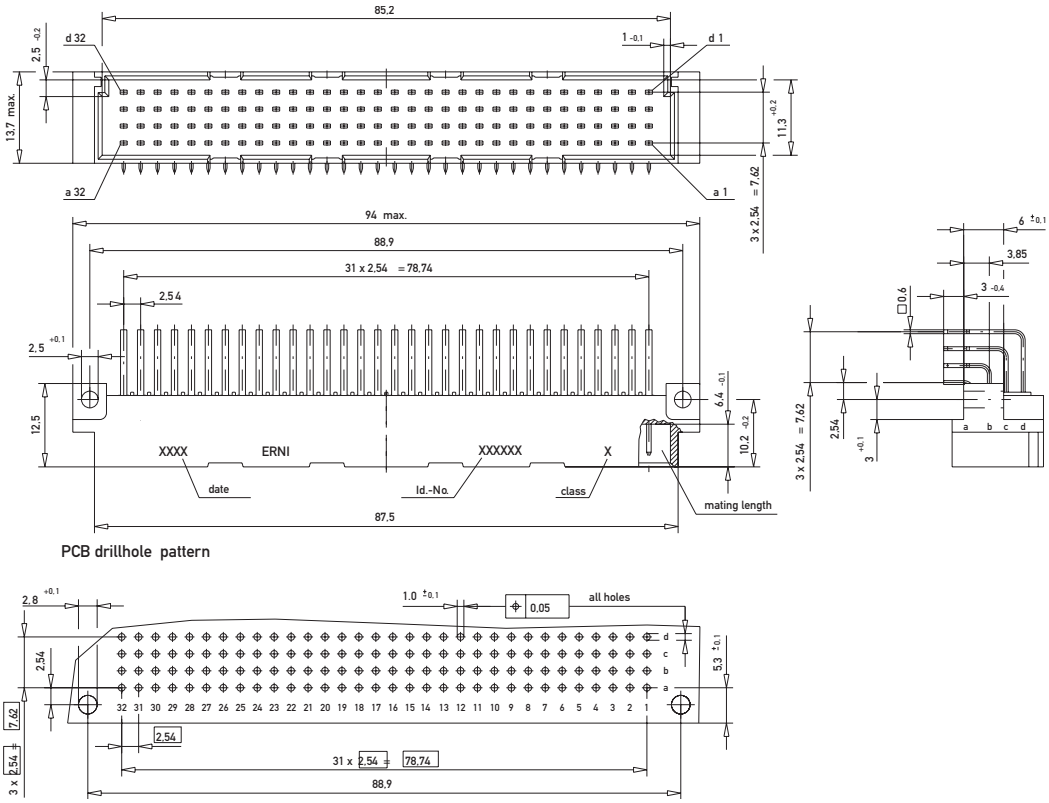

DIN 41612 / IEC 60603-2 Connectors

Type CD Male

Ordering Information

No. of Pins	Termination	Term. Length	Pin Dimensions	Class	Pressfit Zone	Part Number
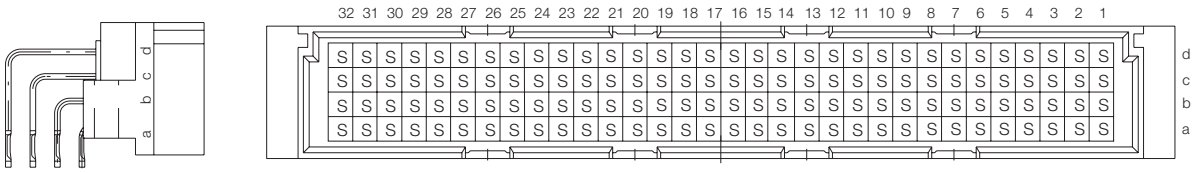						
128	Pressfit	3 mm	0.6 x 0.6 mm	2	1.5 mm	**033436**
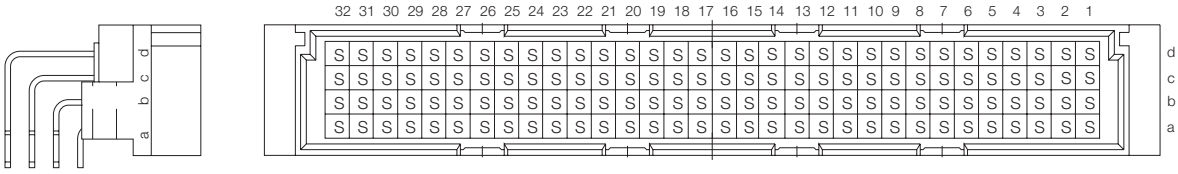						
128	Solder	3 mm	0.6 x 0.6 mm	1	–	**033298**
128	Solder	3 mm	0.6 x 0.6 mm	2	–	**023816**
128	Solder with Clip	3 mm	0.6 x 0.6 mm	2	–	**913767**
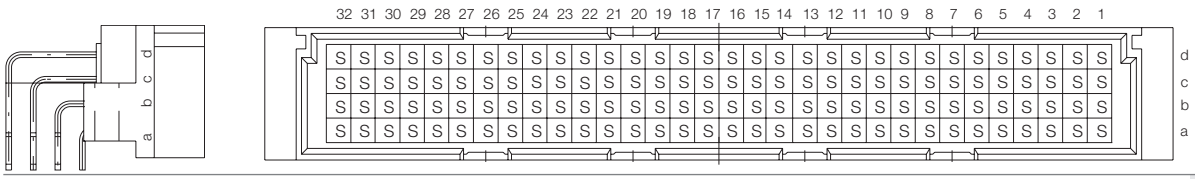						
128	THR	3 mm	0.6 x 0.6 mm	2	–	**144713**
128	THR with Clip	3 mm	0.6 x 0.6 mm	2	–	**154959**

DIN 41612 / IEC 60603-2 Connectors

Type CD Female

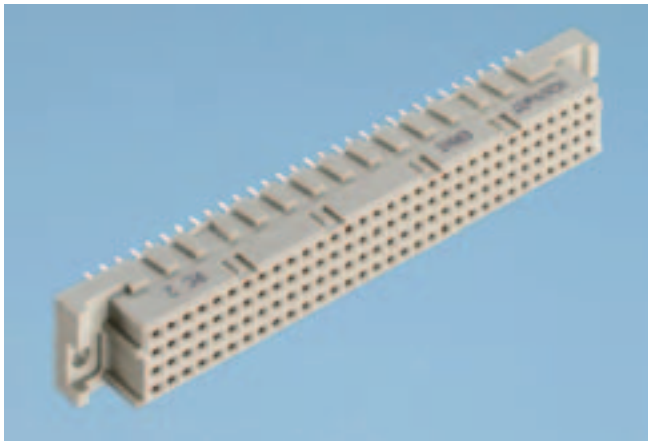

Dimensional Drawing Pressfit

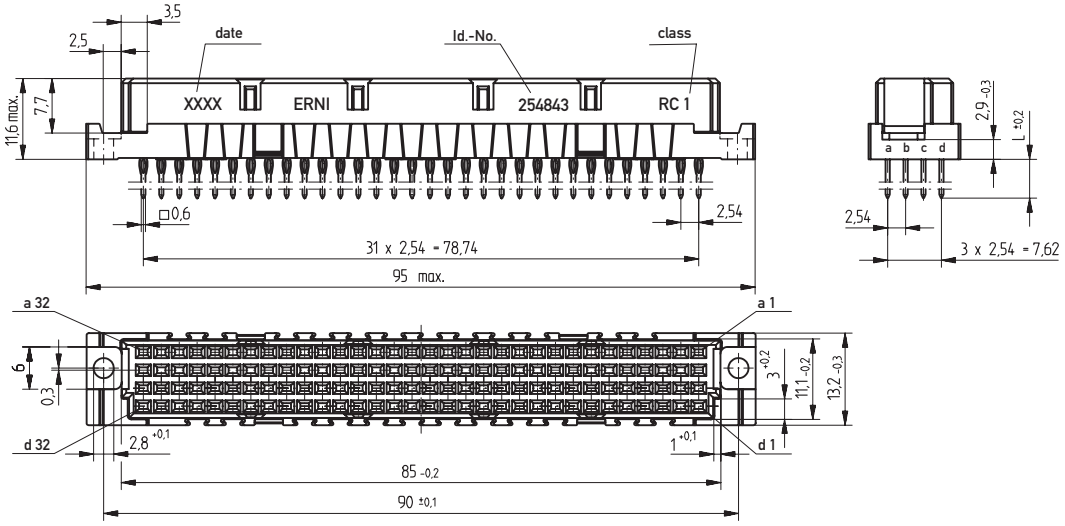

PCB drillhole pattern

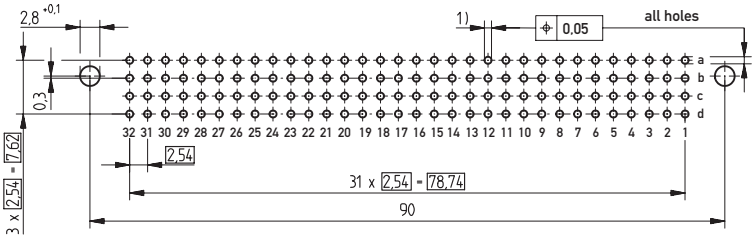

1) ø 1,0 $^{+0,09}_{-0,06}$ Diameter of finished plated-through hole
ø 1,15 $^{\pm 0,025}$ Diameter of drilled hole

Dimensional Drawing Solder

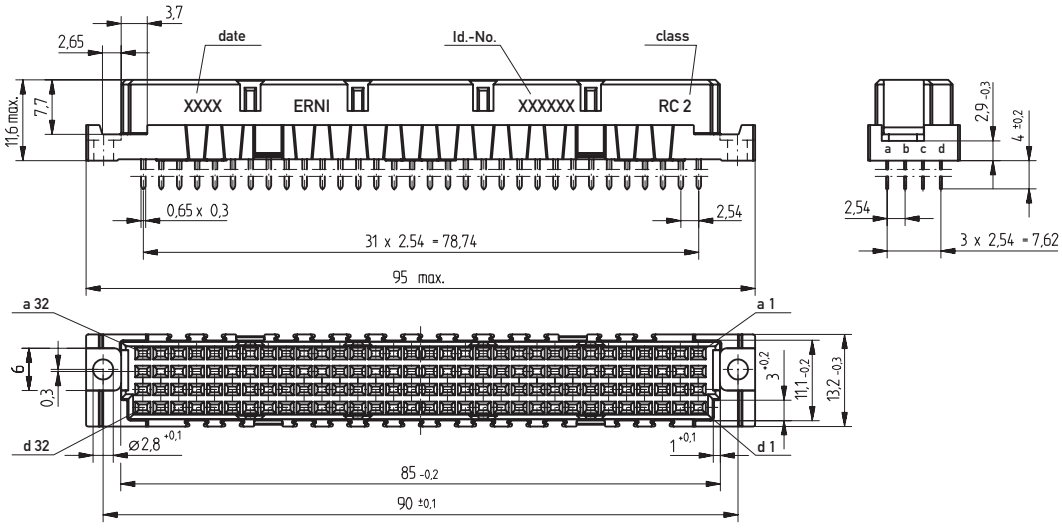

PCB drillhole pattern

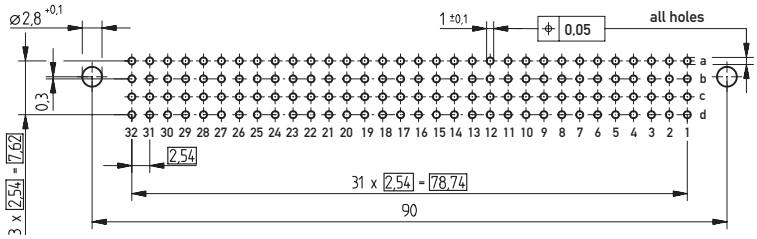

Dimensional Drawing THR

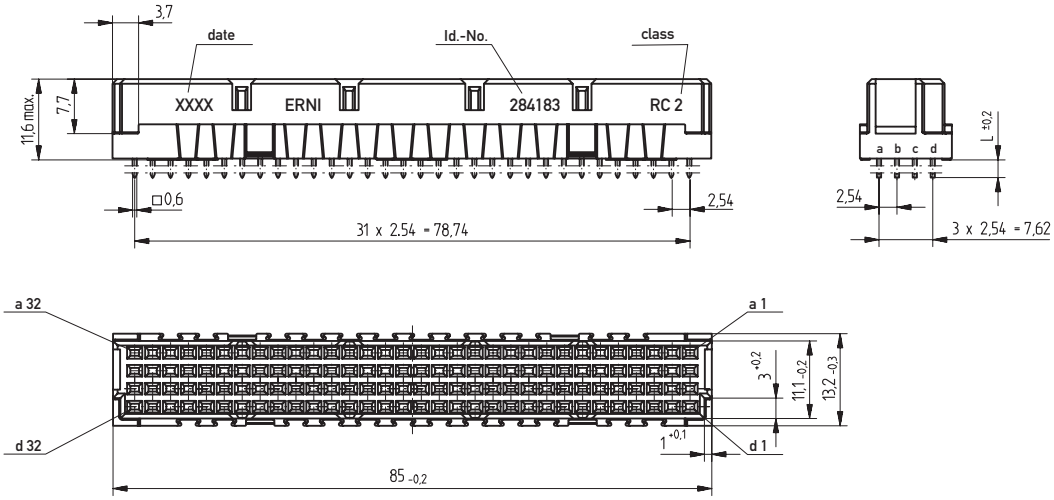

PCB drillhole pattern

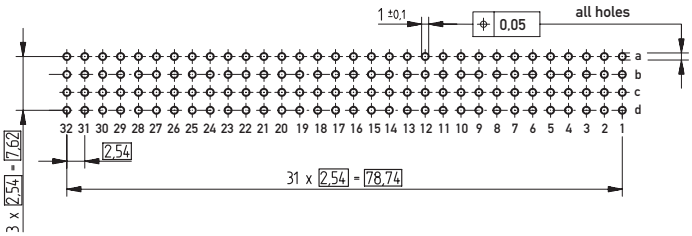

Ordering Information

No. of Pins	Termination	Term. Length	Pin Dimensions	Class	Pressfit Zone	Part Number
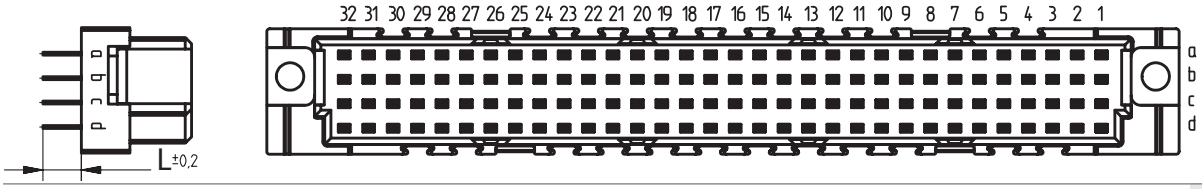						
128	Pressfit	4 mm	0.8 x 0.3 mm	2	–	**254118**
128	Pressfit	5.5 mm	0.6 x 0.6 mm	1	–	**254843**
128	Pressfit	5.5 mm	0.6 x 0.6 mm	2	–	**244999**
128	Pressfit w/o Flange	5.5 mm	0.6 x 0.6 mm	2	–	**254844**
128	Pressfit w. Transfer Zone	13 mm	0.6 x 0.6 mm	2	2.5 mm	**254979**
128	Pressfit w. Transfer Zone	17 mm	0.6 x 0.6 mm	2	2.5 mm	**284181**
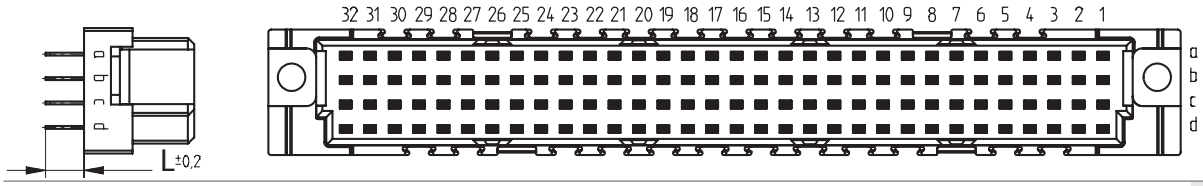						
128	Solder	3.7 mm	0.65 x 0.3 mm	1	–	**284182**
128	Solder	3.7 mm	0.65 x 0.3 mm	2		**254977**
128	Solder w/o Flange	3.7 mm	0.65 x 0.3 mm	2	–	**284180**
128	Solder with Clip	3.7 mm	0.65 x 0.3 mm	2	–	**254978**
128	Solder w. kinked Legs	4.5 mm	0.8 x 0.3 mm	2	–	**284951**
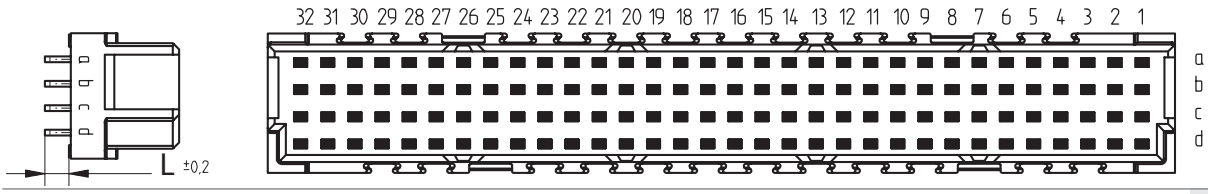						
128	THR w/o Flange	2.5 mm	0.6 x 0.6 mm	2	–	**284183**

DIN 41612 / IEC 60603-2 Connectors

Type RD Male

Dimensional Drawing Pressfit

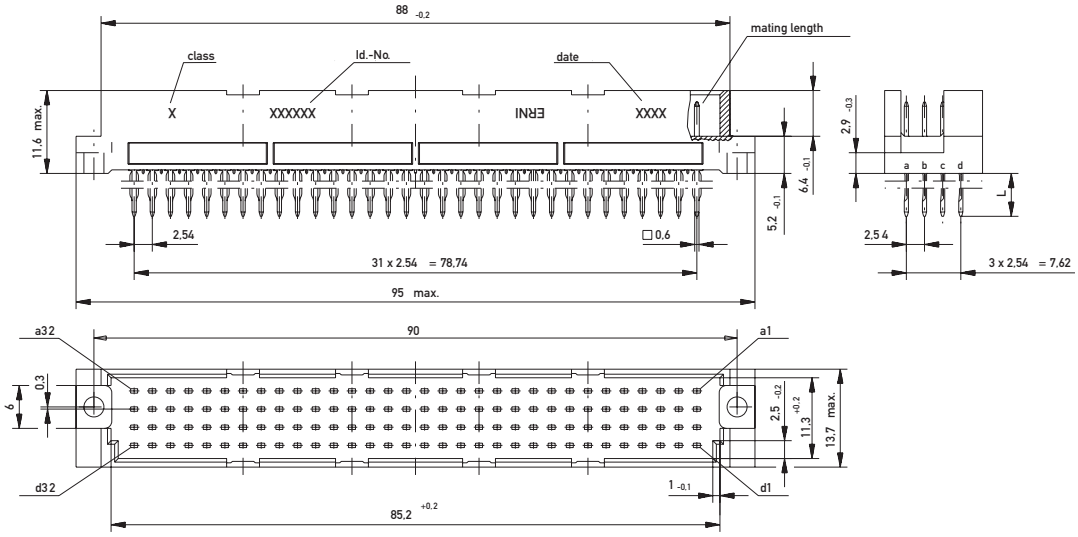

PCB drillhole pattern

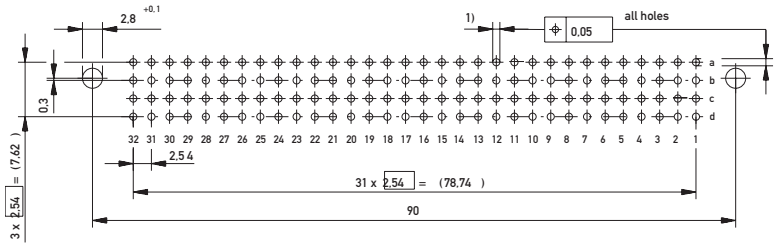

1) ø 1.0 -0.06 Diameter of finished plated-through hole
ø 1.15 ±0.025 Diameter of drilled hole

DIN 41612 / IEC 60603-2 Connectors

Type RD Male

Dimensional Drawing Solder

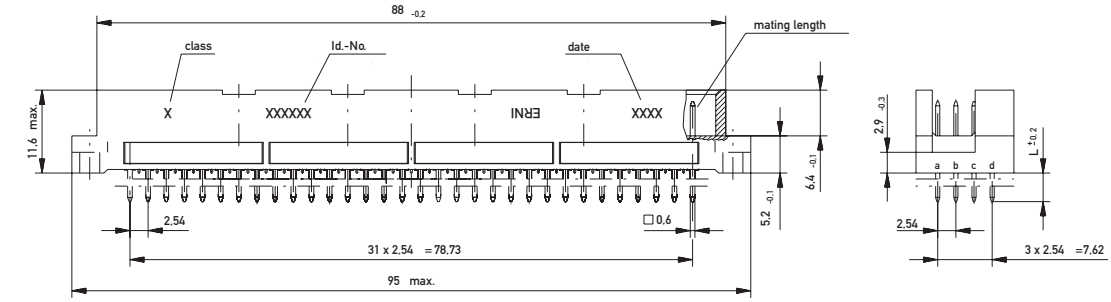

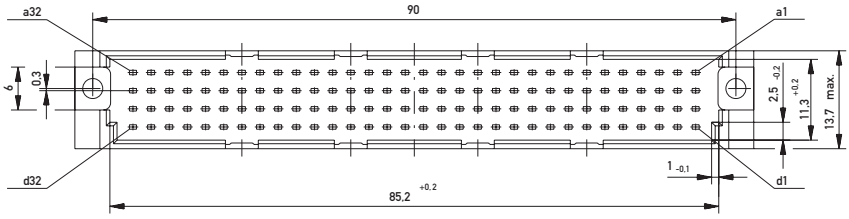

PCB drillhole pattern

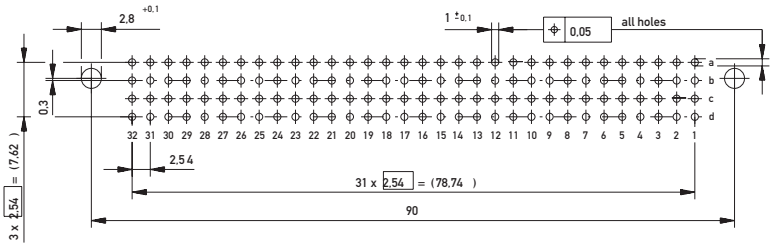

Dimensional Drawing THR

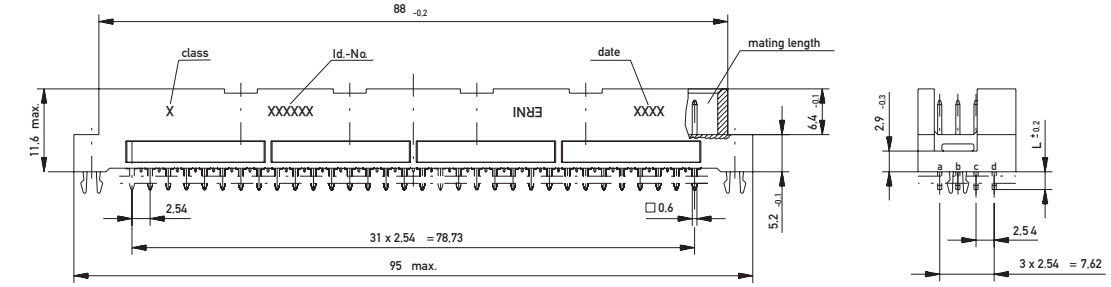

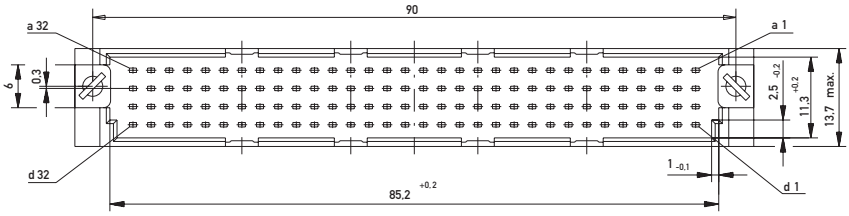

PCB drillhole pattern

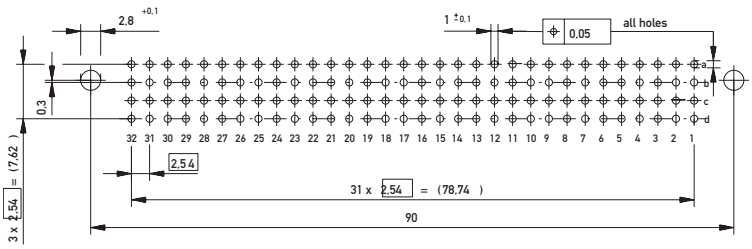

DIN 41612 / IEC 60603-2 Connectors

Type RD Male

Ordering Information

No. of Pins	Termination	Term. Length	Pin Dimensions	Class	Pressfit Zone	Part Number
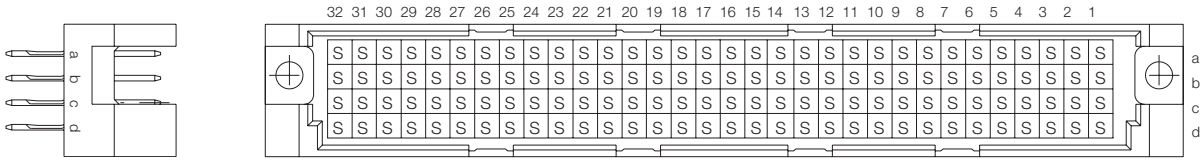						
128	Pressfit	6 mm	0.6 x 0.6 mm	2	2.5 mm	**013178**
128	Pressfit w. Transfer Zone	20 mm	0.6 x 0.6 mm	2	2.5 mm	**013154**
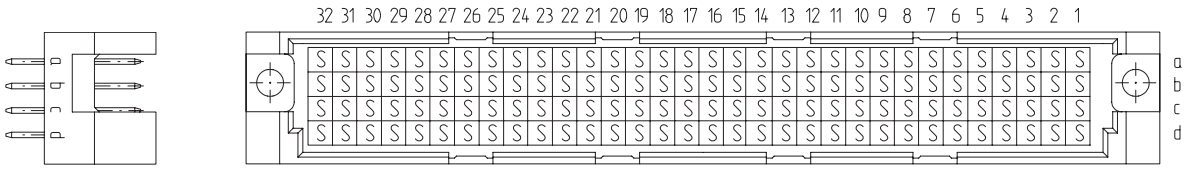						
128	Solder	4 mm	0.6 x 0.6 mm	1	–	**013171**
128	Solder	4 mm	0.6 x 0.6 mm	2	–	**013172**
128	Solder	13 mm	0.6 x 0.6 mm	1	–	**013174**
128	Solder	13 mm	0.6 x 0.6 mm	2	–	**013175**
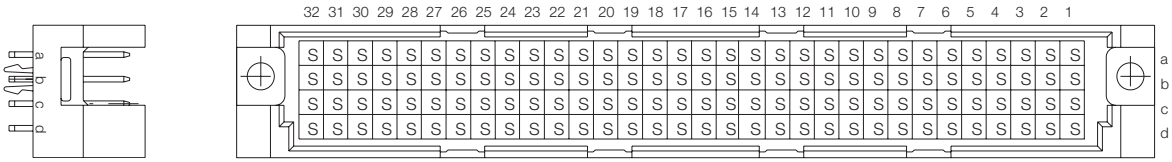						
128	THR with Clip	2.5 mm	0.6 x 0.6 mm	2	–	**154970**

DIN 41612 / IEC 60603-2 Connectors

Type RD Female

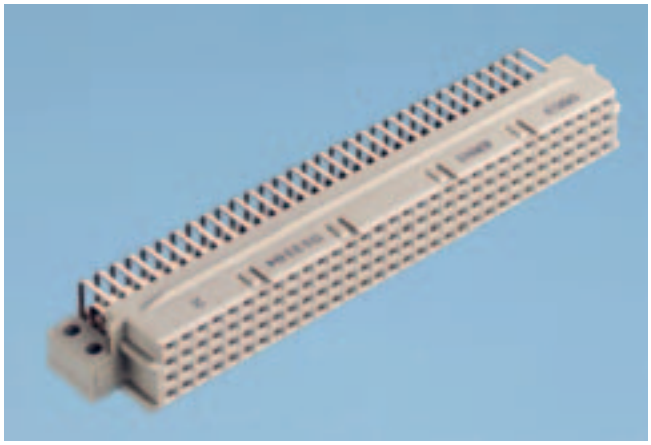

Size RD 128 female connectors are provided with locating strip. This plastic component is attached to the extended mounting flanges and serves to guide the pins accurately.
The extended mounting flanges have two mounting holes at a pitch of 5.08mm. The length of the mounting flanges provides improved support for the connector on the PC board.

Dimensional Drawing Pressfit

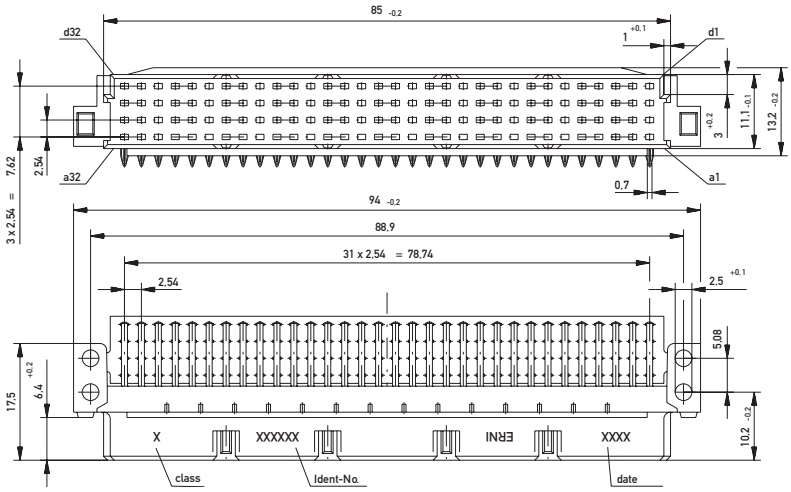

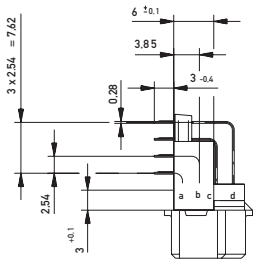

PCB drillhole pattern

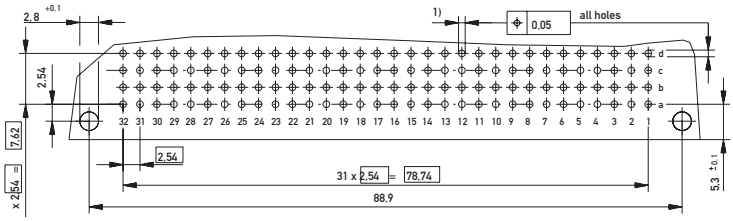

1) ø 1,0 - 0.06 Diameter of finished plated-through hole
ø 1,15 ± 0.025 Diameter of drilled hole

DIN 41612 / IEC 60603-2 Connectors

Type RD Female

Dimensional Drawing Solder

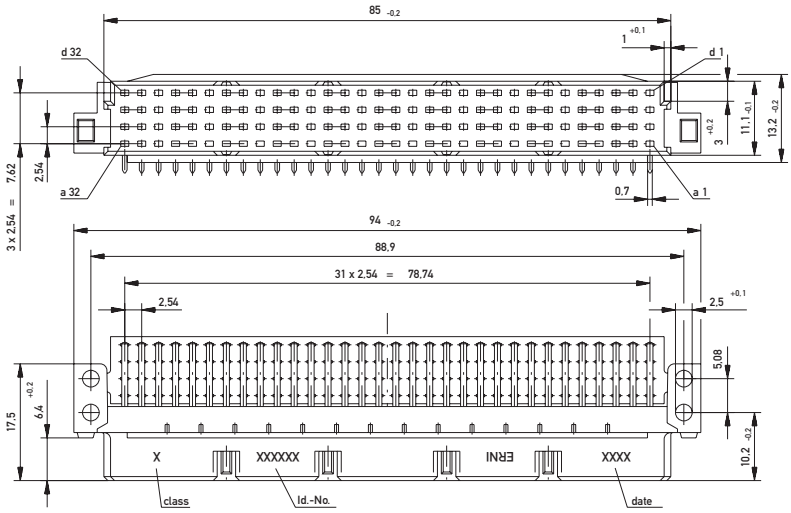

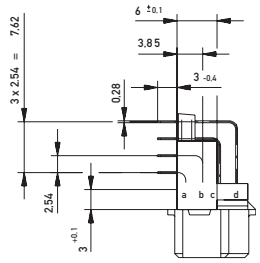

PCB drillhole pattern

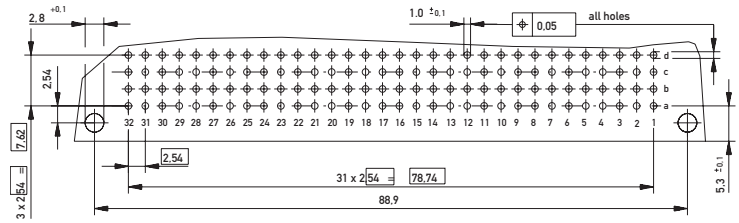

Dimensional Drawing THR

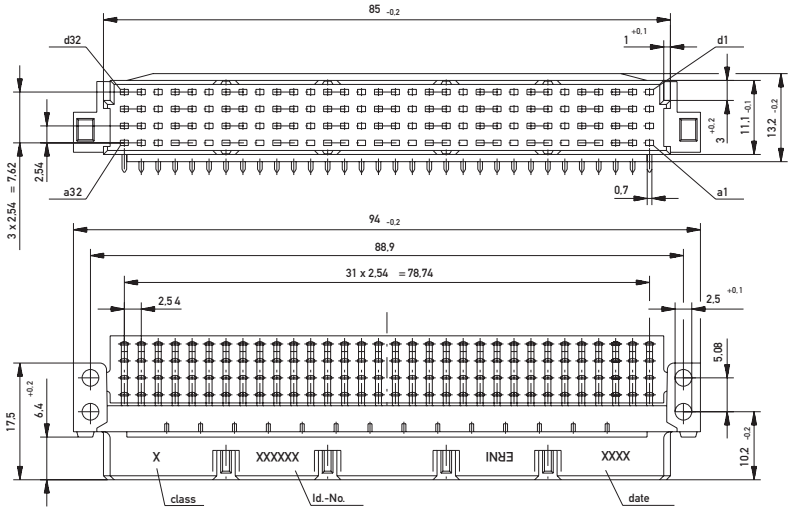

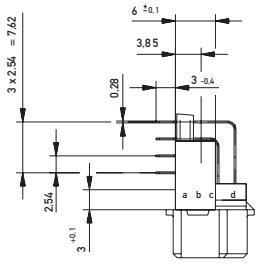

PCB drillhole pattern

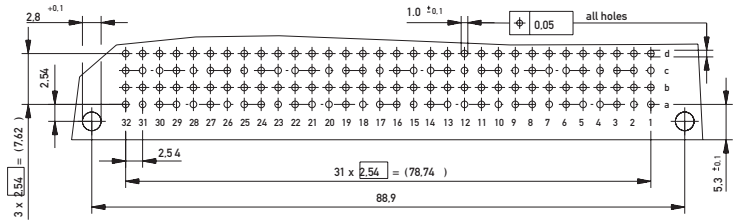

DIN 41612 / IEC 60603-2 Connectors

Type RD Female

Ordering Information

No. of Pins	Termination	Term. Length	Pin Dimensions	Class	Pressfit Zone	Part Number
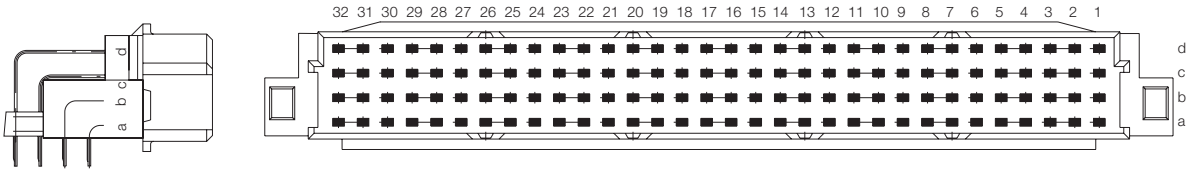						
128	Pressfit	3 mm	0.28 x 0.7 mm	2	1 mm	**013156**
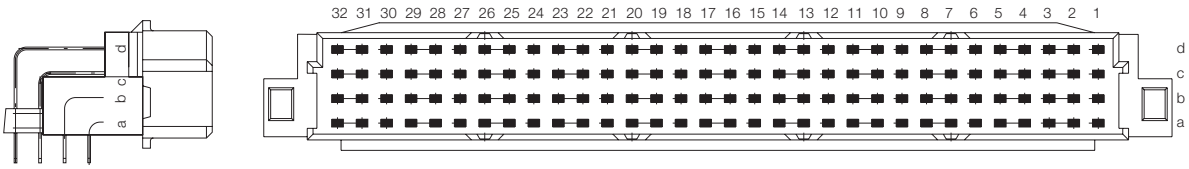						
128	Solder	3 mm	0.28 x 0.7 mm	1	–	**013183**
128	Solder	3 mm	0.28 x 0.7 mm	2	–	**013184**
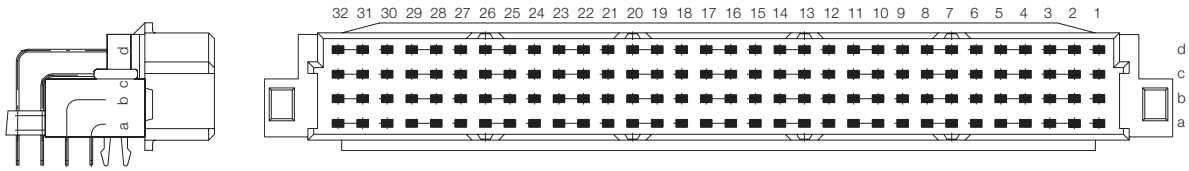						
128	THR with Clip	3 mm	0.28 x 0.7 mm	2	–	**154971**

DIN 41612 / IEC 60603-2 Connectors

Type E 160 / E 80 Male

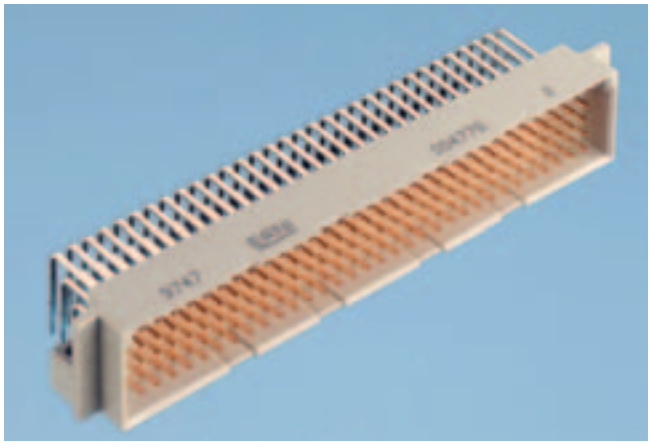

Dimensional Drawing Pressfit Type E 160

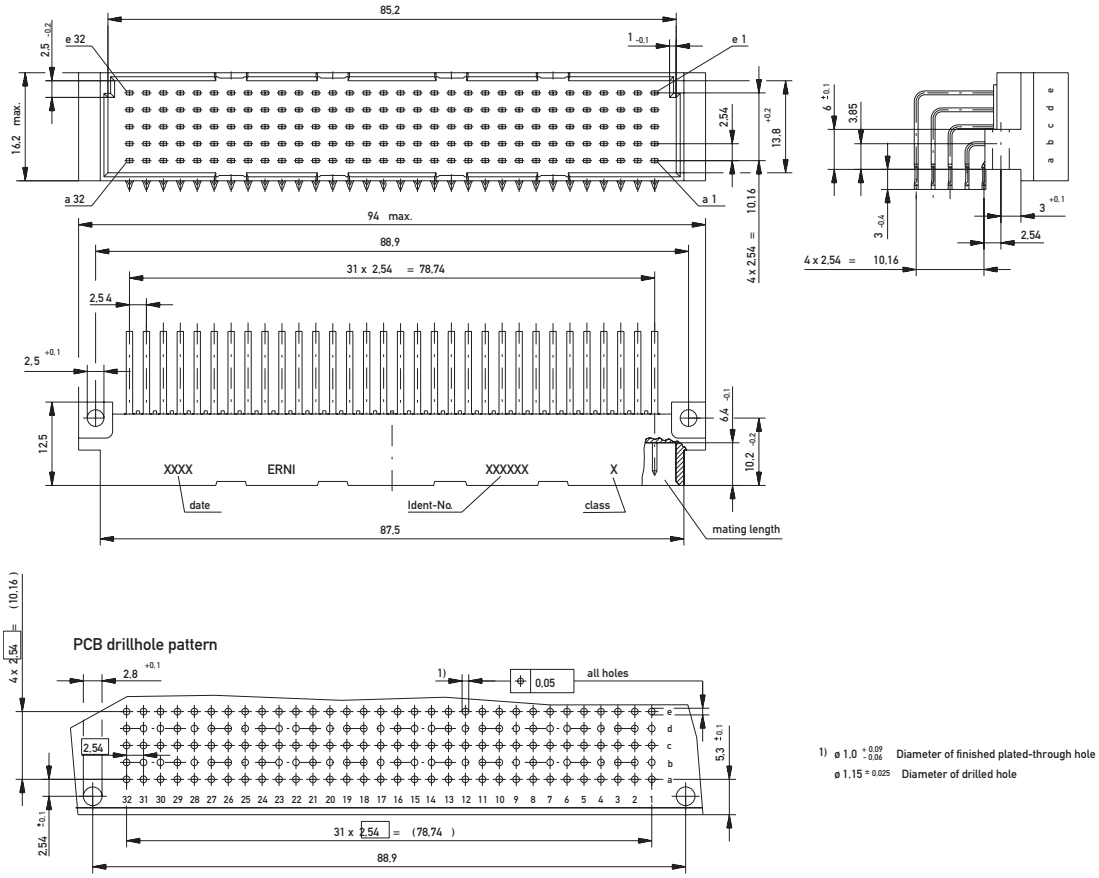

DIN 41612 / IEC 60603-2 Connectors

Type E 160 / E 80 Male

Dimensional Drawing Solder Type E 160

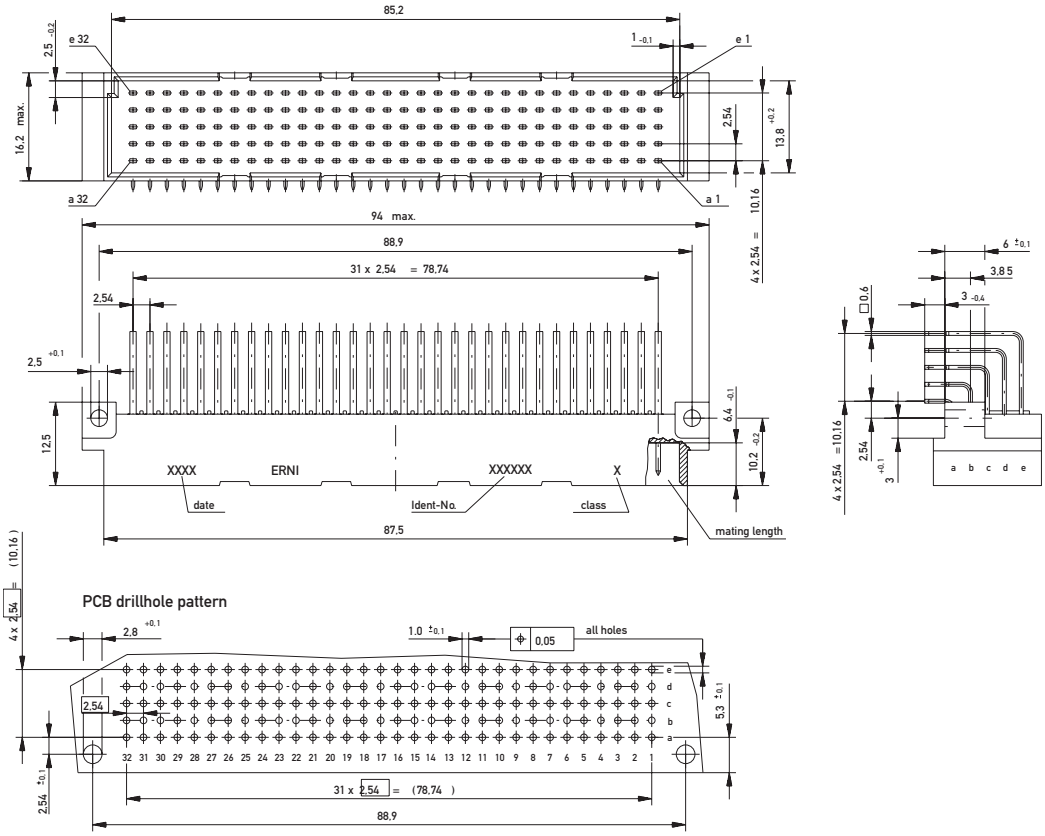

Dimensional Drawing Solder Type E 80

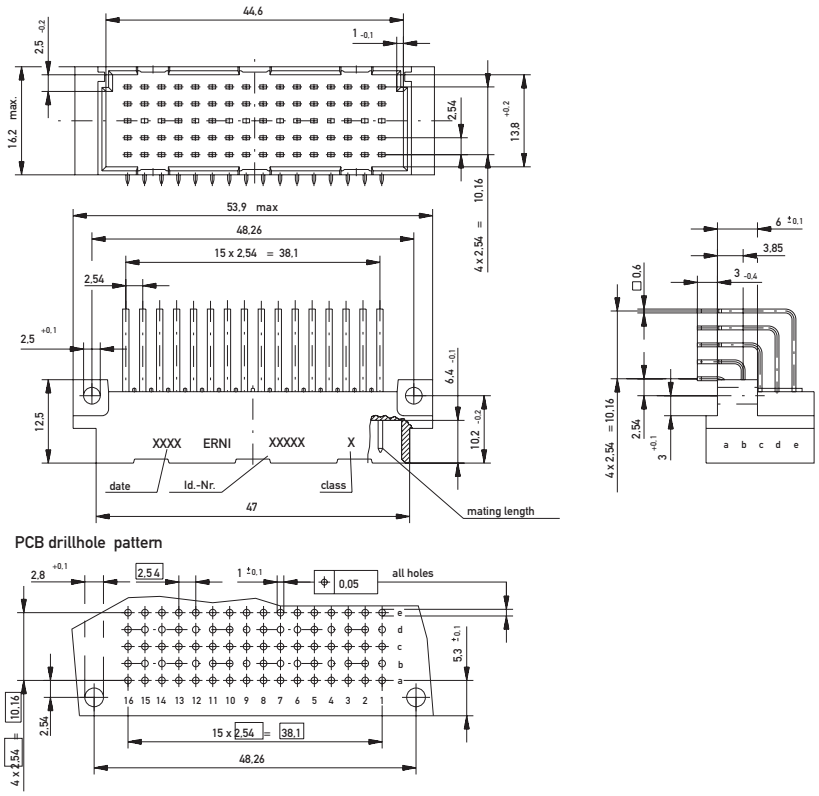

DIN 41612 / IEC 60603-2 Connectors

Type E 160 Male

Ordering Information

No. of Pins	Termination	Term. Length	Pin Dimensions	Class	Pressfit Zone	Part Number
160	Pressfit	3 mm	0.6 x 0.6 mm	2	1.5 mm	**013096**
160	Solder	3 mm	0.6 x 0.6 mm	1	_	**004777**
160	Solder	3 mm	0.6 x 0.6 mm	2	–	**004778**
160	Solder with Clip	3 mm	0.6 x 0.6 mm	2	–	**913615**
160	Solder	3.8 mm	0.6 x 0.6 mm	2	–	**013058**

Type E 80 Male

80	Solder	3 mm	0.6 x 0.6 mm	2	–	**033704**

DIN 41612 / IEC 60603-2 Connectors

Type E 160 Female

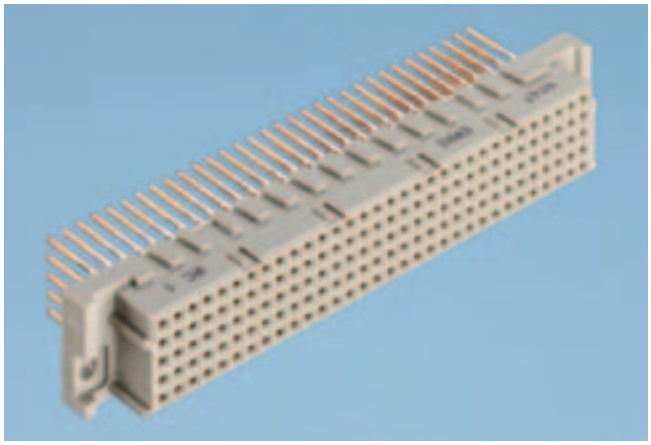

Dimensional Drawing Pressfit

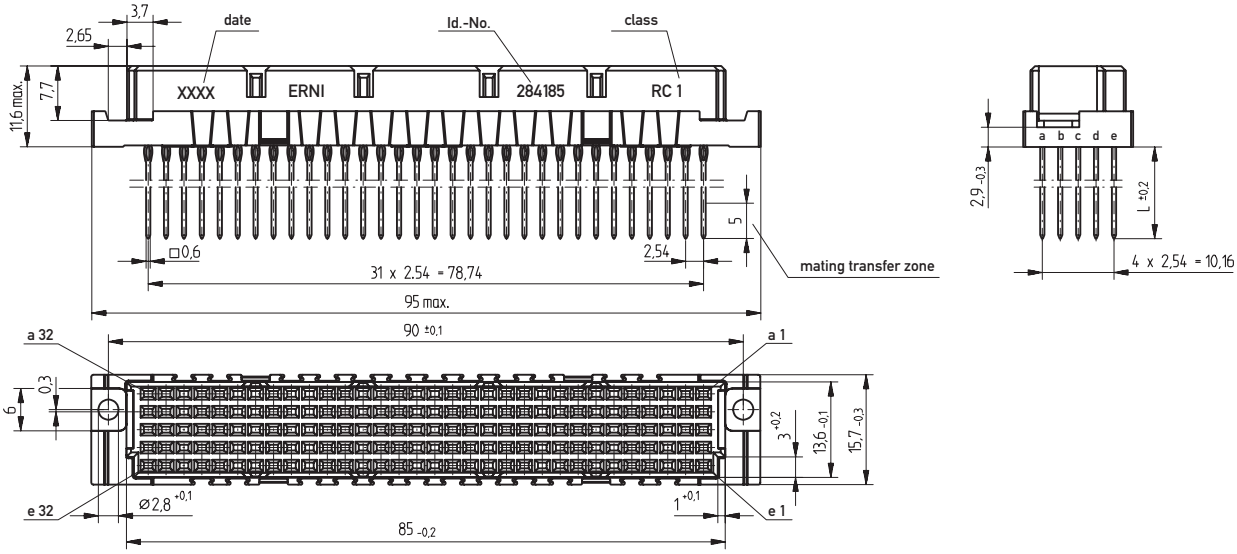

PCB drillhole pattern

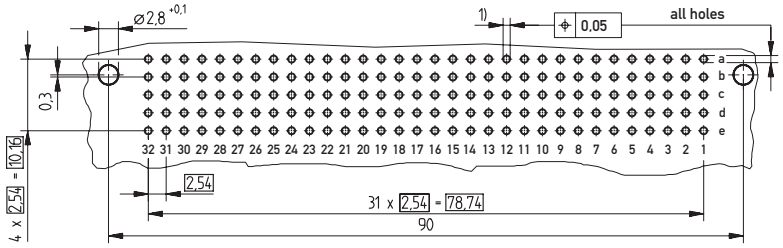

1) ø 1,0 $^{+0,09}_{-0,06}$ Diameter of finished plated-through hole
ø 1,15 ±0,025 Diameter of drilled hole

Dimensional Drawing Solder

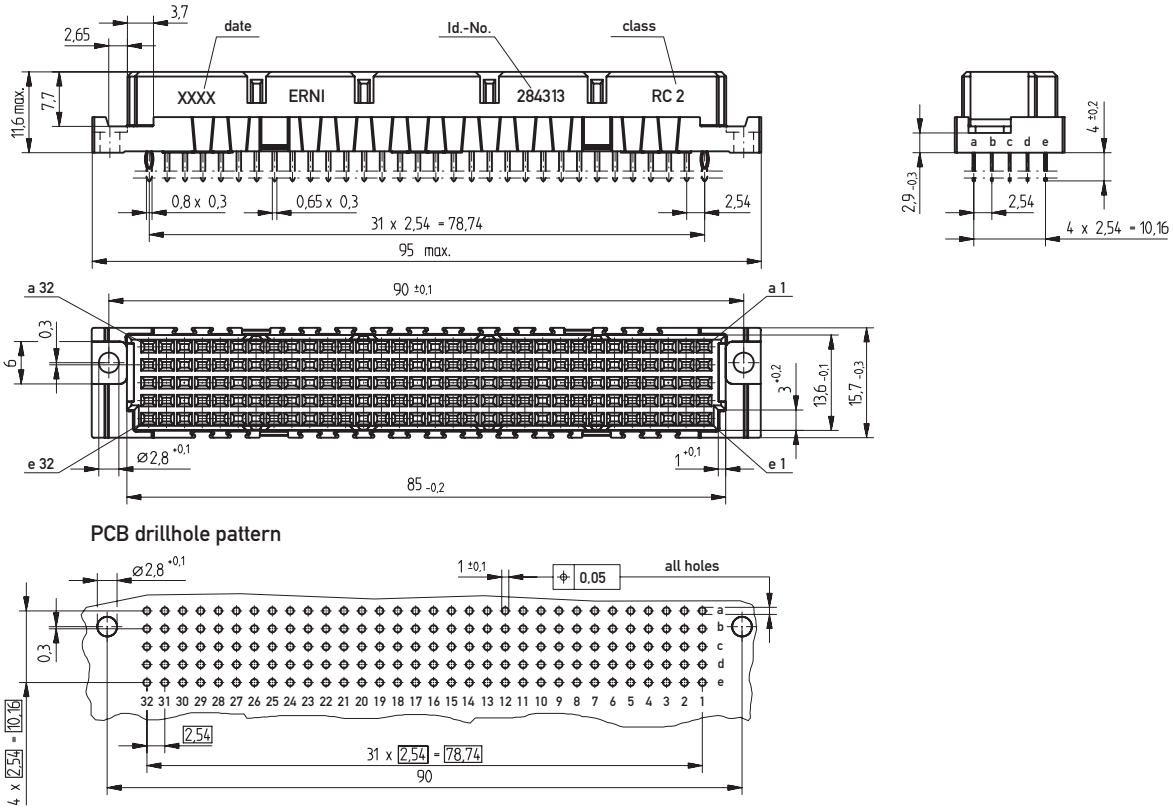

DIN 41612 / IEC 60603-2 Connectors

Type E 160 Female

Ordering Information

No. of Pins	Termination	Term. Length	Pin Dimensions	Class	Pressfit Zone	Part Number
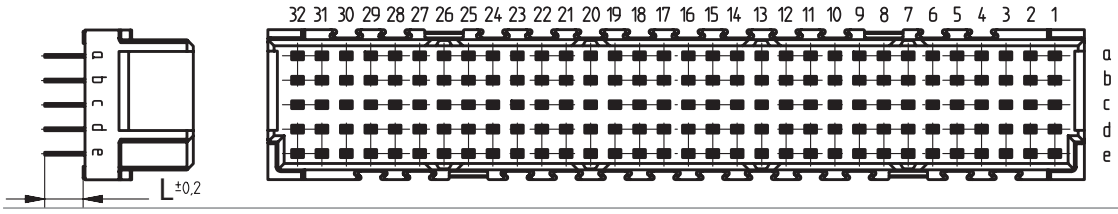						
160	Pressfit w/o Flange	4 mm	0.8 x 0.3 mm	2	2 mm	**254124**
160	Pressfit w. Transfer Zone	13 mm	0.6 x 0.6 mm	1	2.5 mm	**284185**
160	Pressfit w. Transfer Zone	13 mm	0.6 x 0.6 mm	2	2.5 mm	**254975**
160	Pressfit	17 mm	0.6 x 0.6 mm	2	2.5 mm	**244672**
160	Pressfit w. Transfer Zone	17 mm	0.6 x 0.6 mm	1	2.5 mm	**284184**
160	Pressfit w. Transfer Zone	17 mm	0.6 x 0.6 mm	2	2.5 mm	**254960**
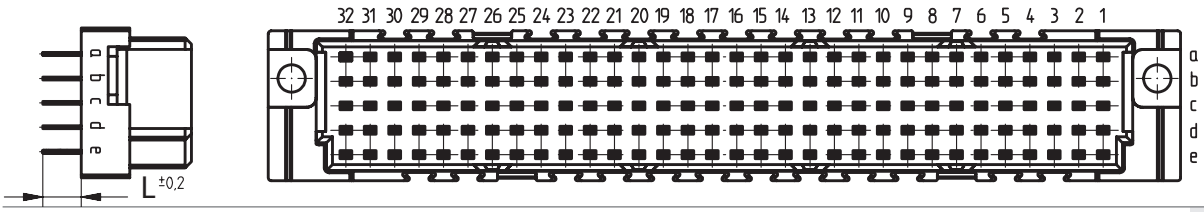						
160	Solder w. retaining Loop	4 mm	0.8 x 0.3 mm	2	–	**284313**

DIN 41612 / IEC 60603-2 Connectors

Type TE Male

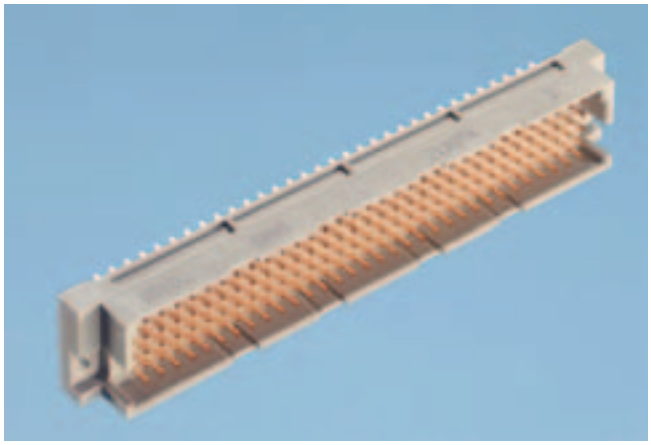

Dimensional Drawing Pressfit

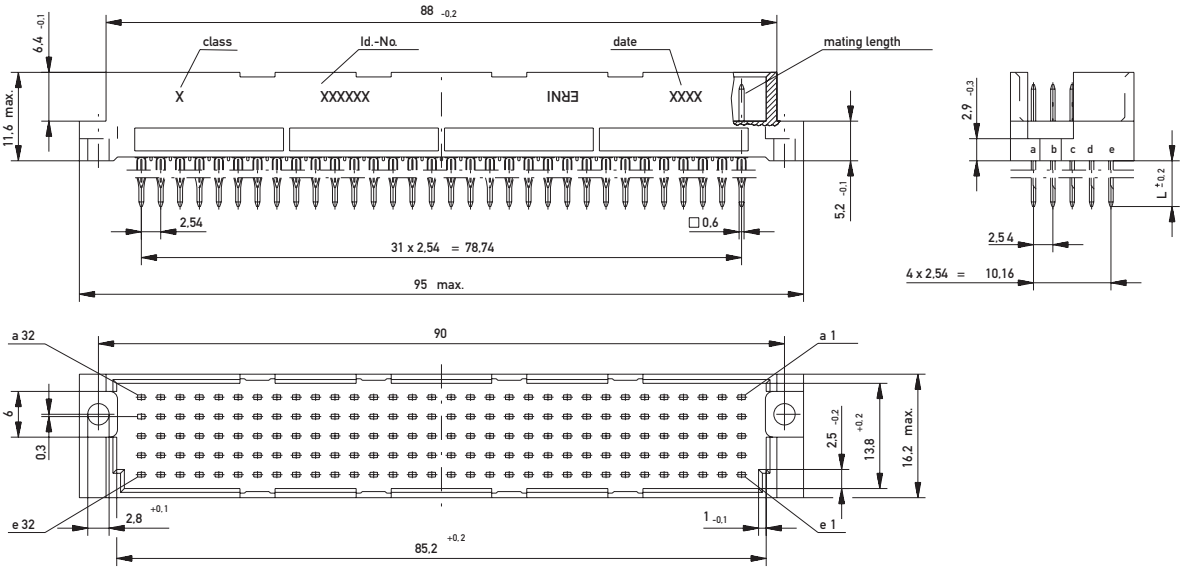

PCB drillhole patter

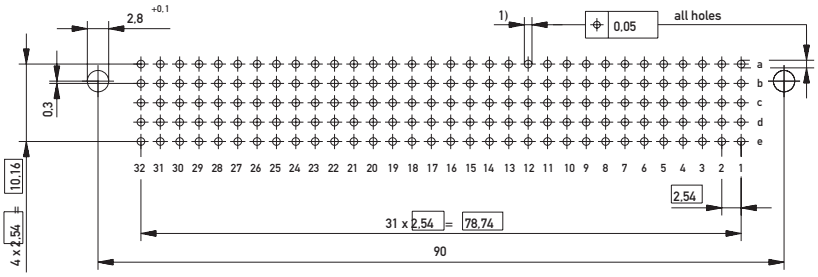

1) ø 1,0 $^{+0.09}_{-0.06}$ Diameter of finished plated-through hole
ø 1,15 ±0.025 Diameter of drilled hole

Dimensional Drawing Solder

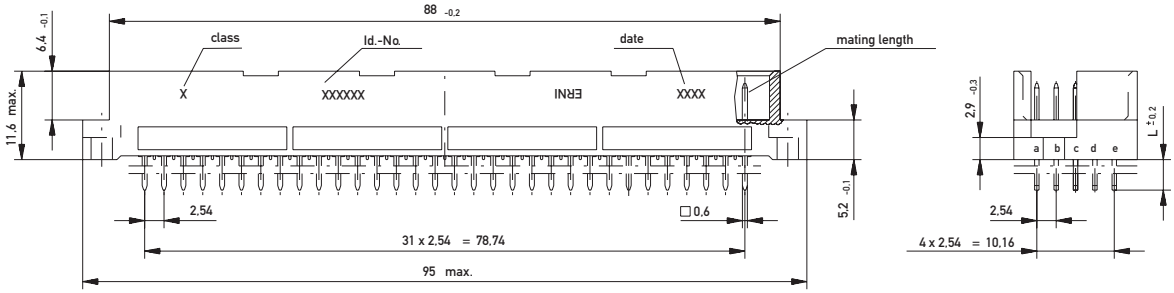

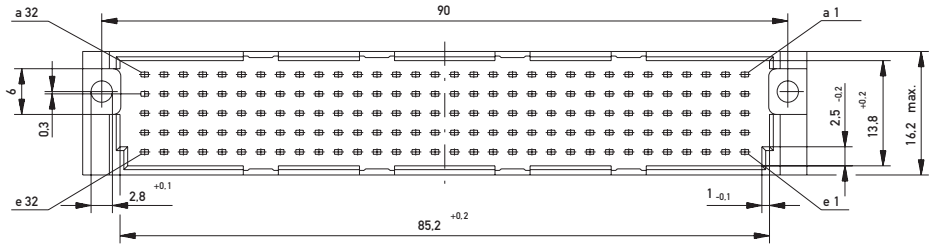

PCB drillhole pattern

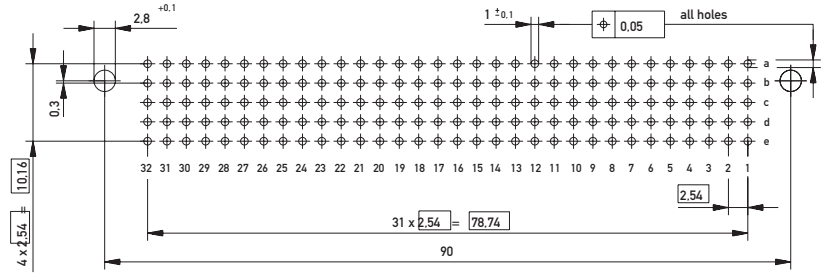

Ordering Information

No. of Pins	Termination	Term. Length	Pin Dimensions	Class	Pressfit Zone	Part Number
160	Pressfit	6 mm	0.6 x 0.6 mm	1	2.5 mm	**013160**
160	Pressfit	6 mm	0.6 x 0.6 mm	2	2.5 mm	**013161**
160	Pressfit	20 mm	0.6 x 0.6 mm	2	2.5 mm	**013164**
160	Pressfit w. Transfer Zone	20 mm	0.6 x 0.6 mm	2	2.5 mm	**013155**

160	Solder	4 mm	0.6 x 0.6 mm	1	–	**013073**
160	Solder	4 mm	0.6 x 0.6 mm	2	–	**013074**
160	Solder	13 mm	0.6 x 0.6 mm	2	–	**013071**

DIN 41612 / IEC 60603-2 Connectors

Type TE Female

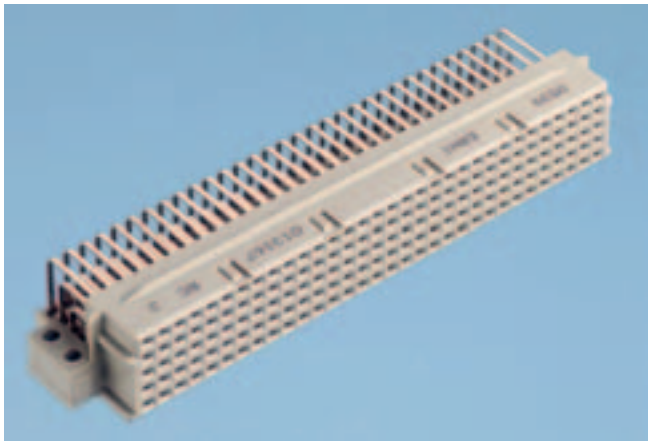

Size TE 160 female connectors are fitted with a locating strip. This plastic component is attached to the extended mounting flanges and serves to guide the pins accurately.
The extended mounting flanges have two mounting holes.

The length of the mounting flanges provides improved "hold down" support for the connector during soldering process.

Dimensional Drawing Pressfit

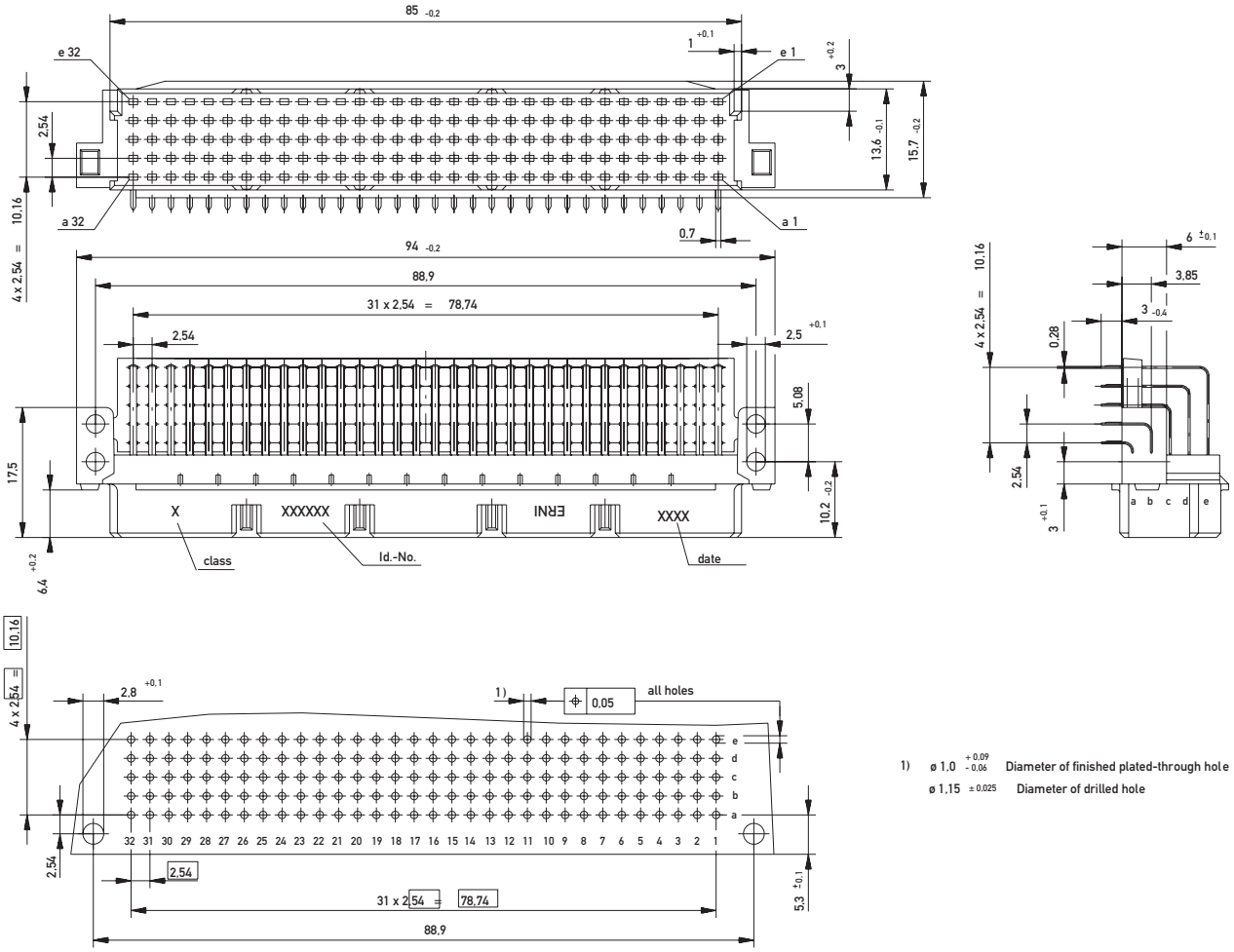

Dimensional Drawing Solder

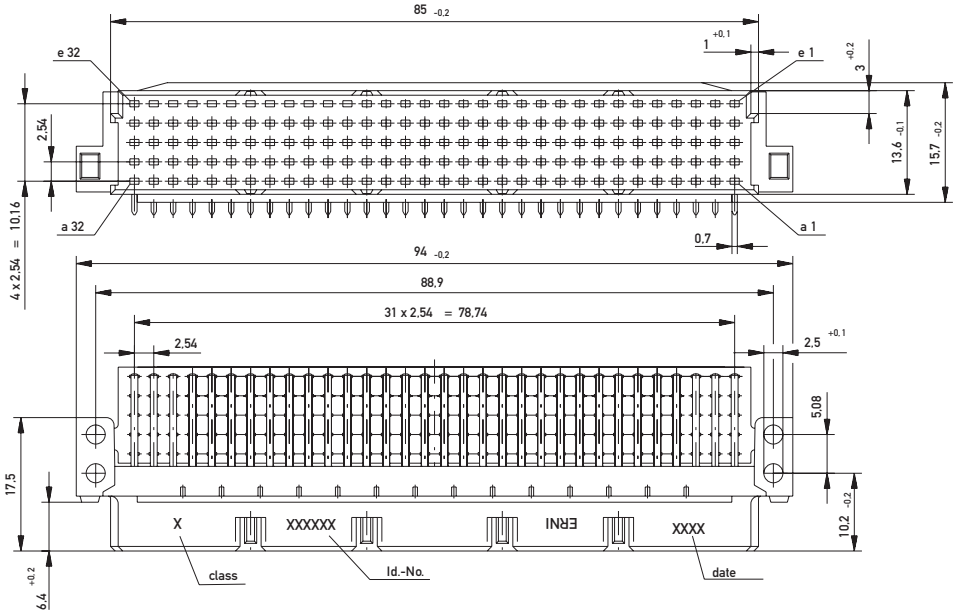

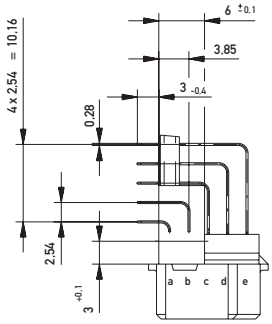

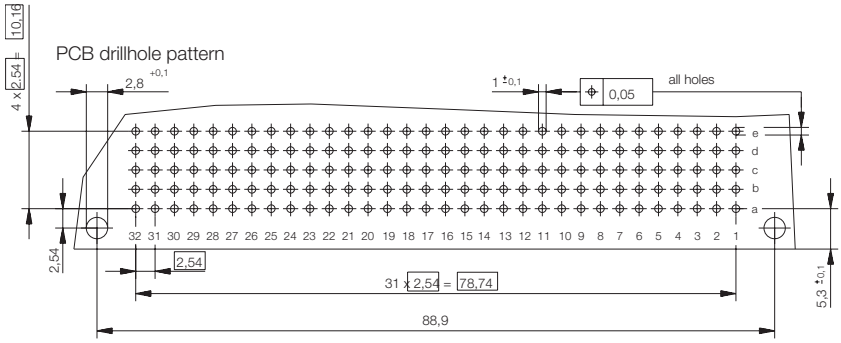

Ordering Information

No. of Pins	Termination	Term. Length	Pin Dimensions	Class	Pressfit Zone	Part Number
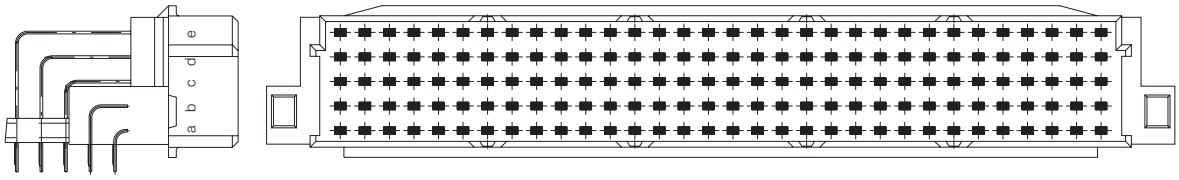						
160	Pressfit	3 mm	0.28 x 0.7 mm	2	1 mm	**013157**
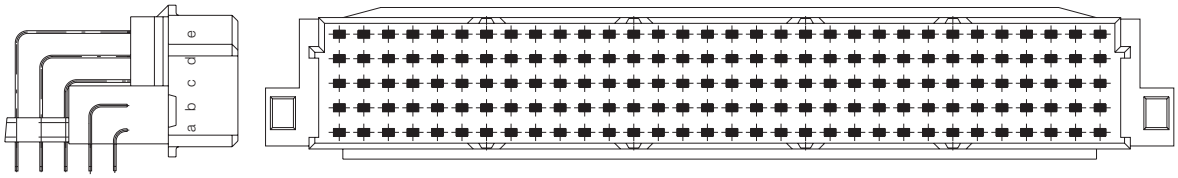						
160	Solder	3 mm	0.28 x 0.7 mm	1	–	**013166**
160	Solder	3 mm	0.28 x 0.7 mm	2	–	**013167**

DIN 41612 / IEC 60603-2 Connectors

Eurocard Center Connector

These Eurocard Center connectors fit precisely between two connectors mounted on a standard double Eurocard. The connector mounting flanges are standardized so that the Eurocard Center Connectors can be combined with sizes B, C, D, E, E160, M and H11 male connectors and with the size Q and R inverted female connectors according to DIN 41612/IEC 60603-2.

Dimensional Drawing Male Solder

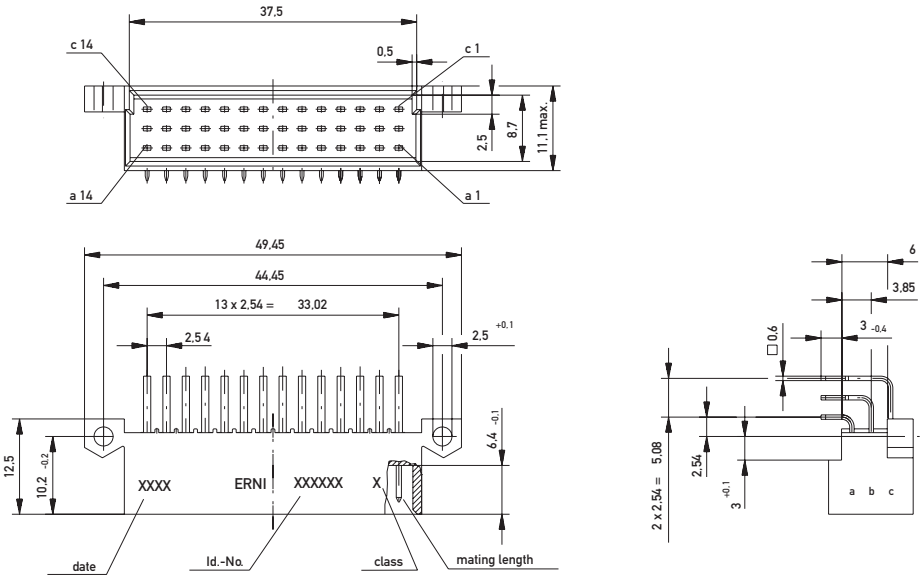

PCB drillhole pattern

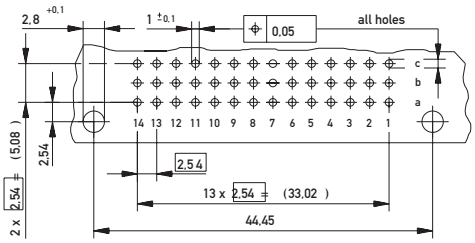

Dimensional Drawing Female Pressfit

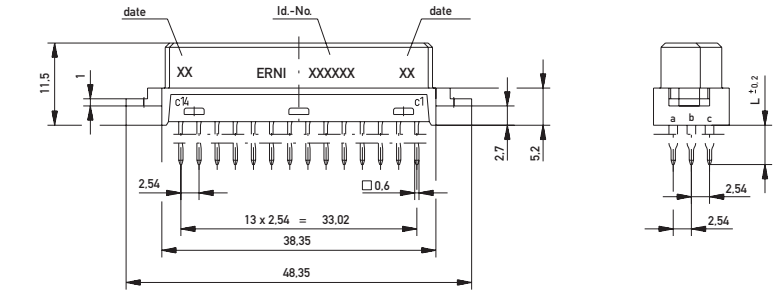

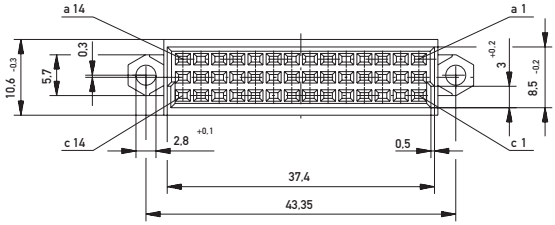

PCB drillhole pattern

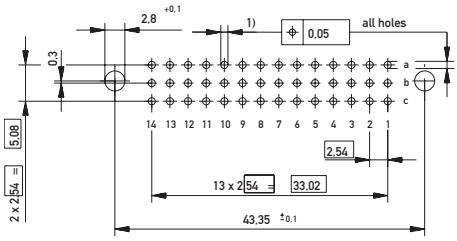

1) ø 1,0 $^{+0,09}_{-0,06}$ Diameter of finished plated-through hole
ø 1,15 ±0,025 Diameter of drilled hole

Dimensional Drawing Female Solder

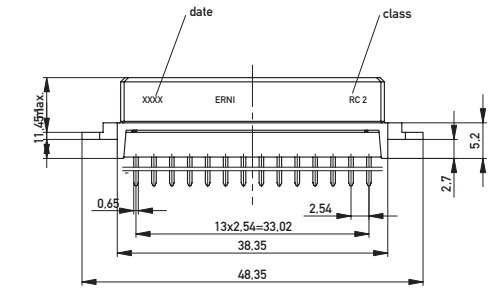

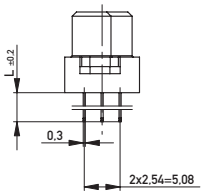

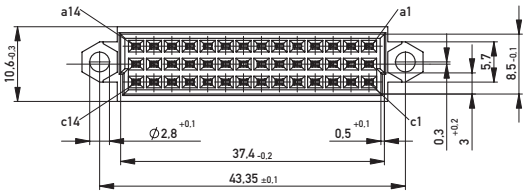

PCB drillhole pattern

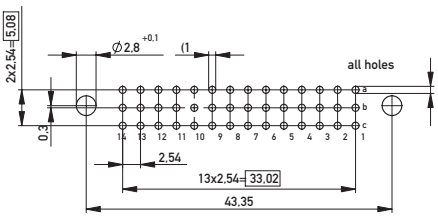

Eurocard Center Connector Male

Ordering Information

No. of Pins	Termination	Term. Length	Pin Dimensions	Class	Pressfit Zone	Part Number
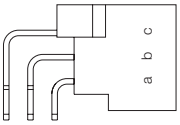	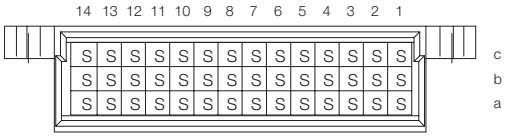					
42	Solder	3 mm	0.6 x 0.6 mm	1	–	**433590**
42	Solder	3 mm	0.6 x 0.6 mm	2	–	**433591**

Eurocard Center Connector Female

Ordering Information

No. of Pins	Termination	Term. Length	Pin Dimensions	Class	Pressfit Zone	Part Number
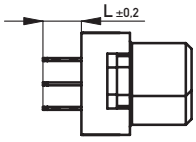	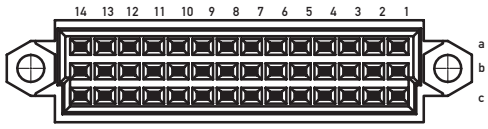					
42	Pressfit	5.5 mm	0.6 x 0.6 mm	2	3 mm	**004289**
42	Solder	4 mm	0.6 x 0.6 mm	2		**354972**

DIN 41612 / IEC 60603-2 Connectors

Type D Male

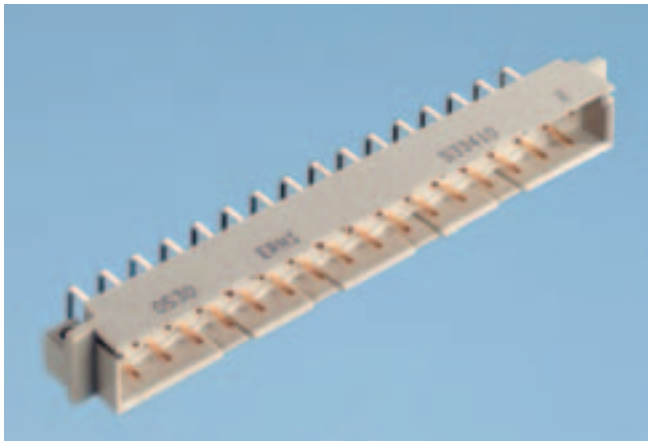

Dimensional Drawing Solder

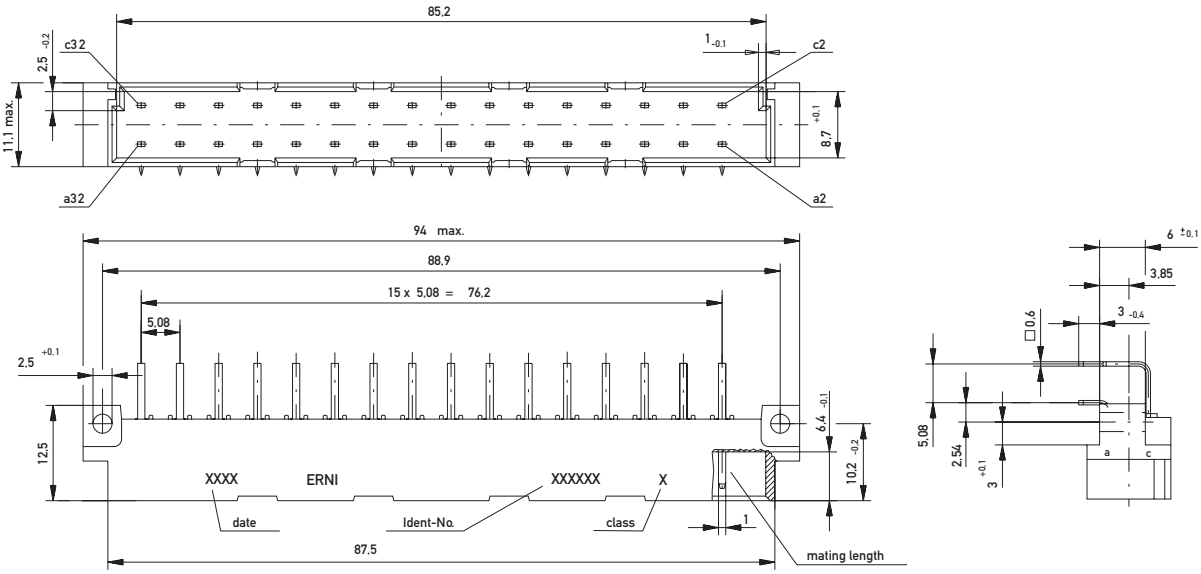

PCB drillhole pattern

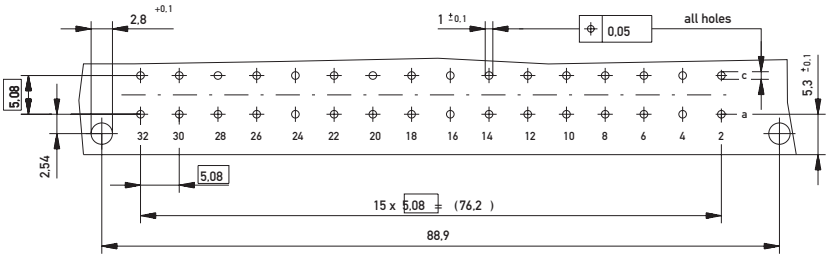

Dimensional Drawing Solder

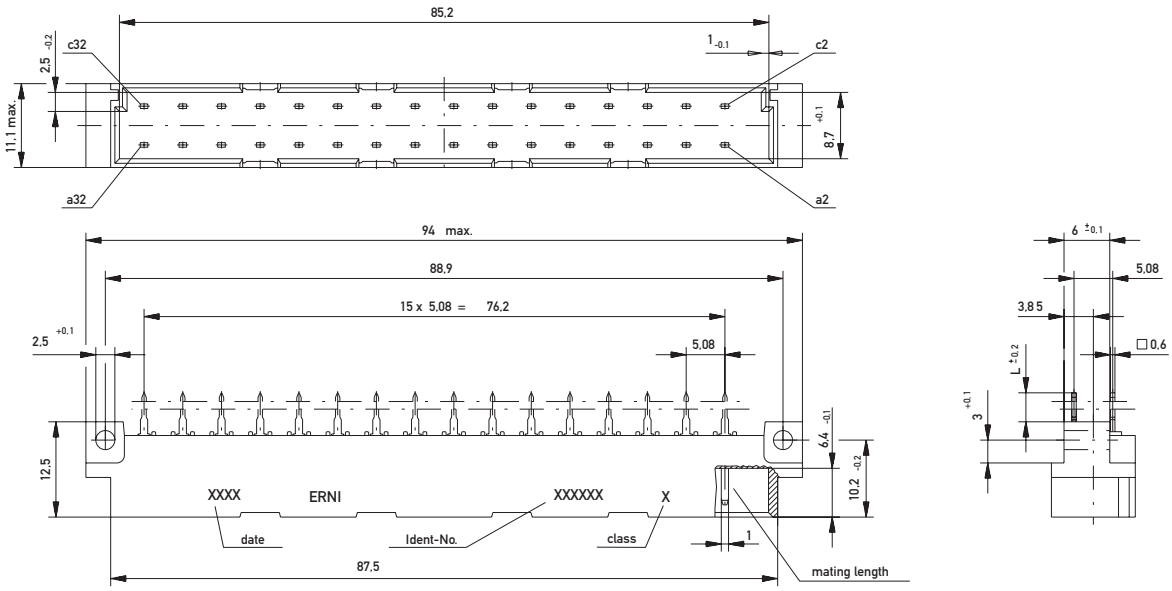

PCB drillhole pattern

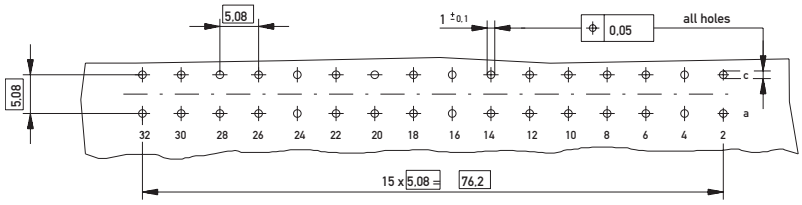

DIN 41612 / IEC 60603-2 Connectors

Type D Male

Ordering Information

No. of Pins	Termination	Term. Length	Pin Dimensions	Class	Pressfit Zone	Part Number
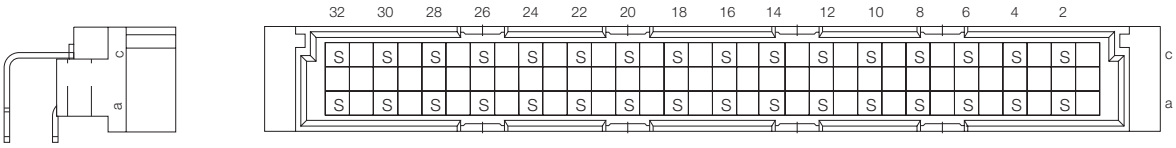						
32	Solder	3 mm	0.6 x 0.6 mm	1	–	**533210**
32	Solder	3 mm	0.6 x 0.6 mm	2	–	**533410**
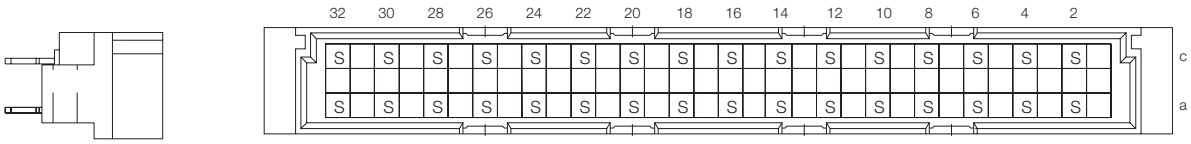						
32	Solder	3.8 mm	0.6 x 0.6 mm	2	–	**594096**

DIN 41612 / IEC 60603-2 Connectors

Type D Female

Dimensional Drawing Pressfit

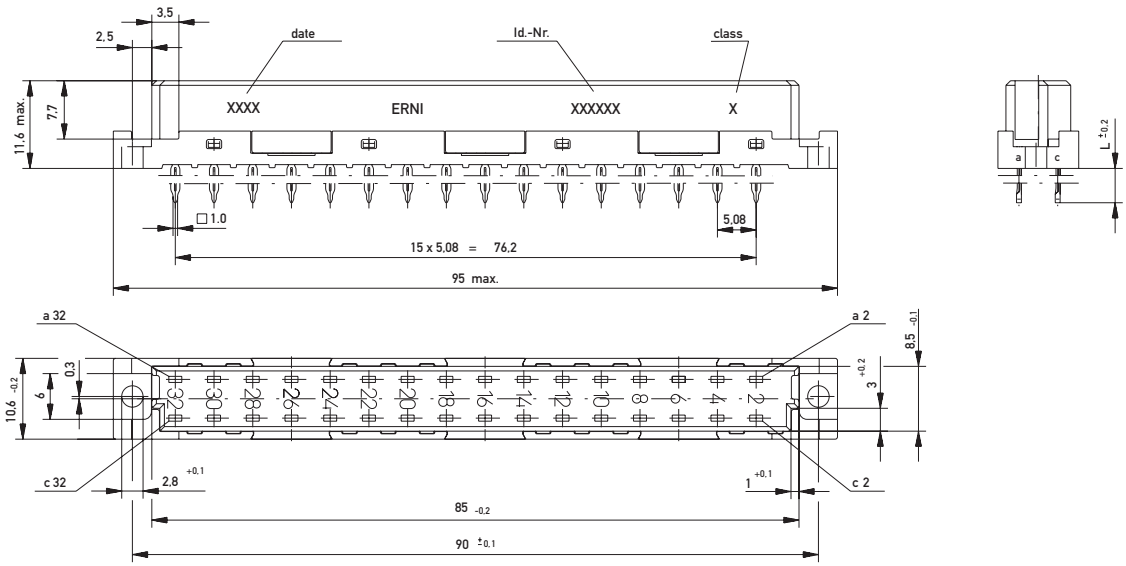

PCB drillhole pattern

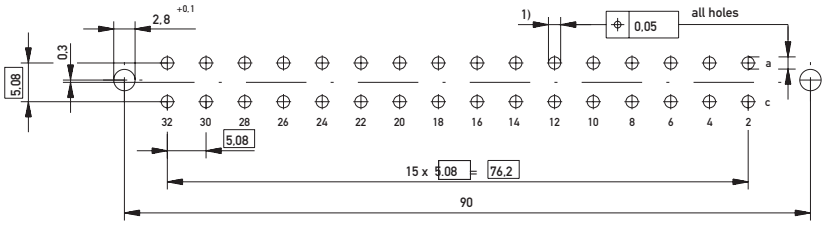

1) ø 1,6 $^{+0.09}_{-0.06}$ Diameter of finished plated-through hole

ø 1,75 $^{-0.03}$ Diameter of drilled hole see drawing 114407

Dimensional Drawing Solder

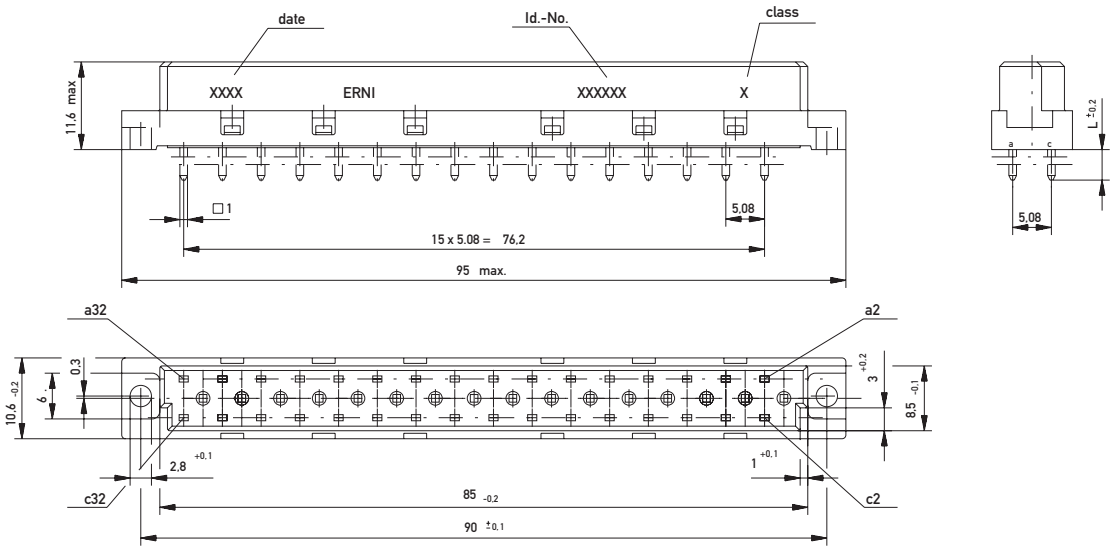

PCB drillhole pattern

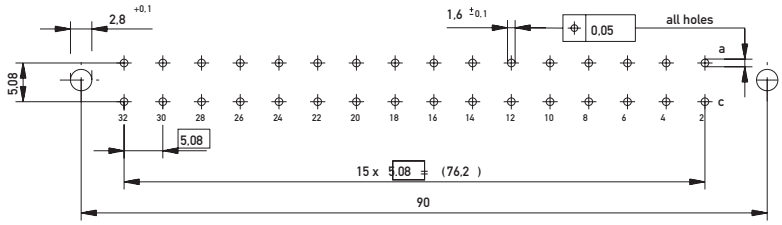

DIN 41612 / IEC 60603-2 Connectors

Type D Female

Ordering Information

No. of Pins	Termination	Term. Length	Pin Dimensions	Class	Pressfit Zone	Part Number
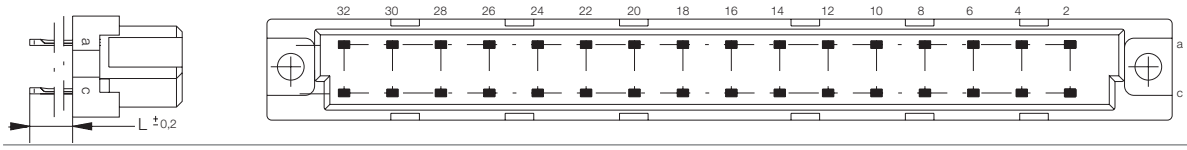						
32	Pressfit	4.5 mm	0.6 x 0.6 mm	2	3 mm	**033427**
32	Pressfit*	6 mm	1 x 1 mm	1	2.5 mm	**424803**
32	Pressfit*	6 mm	1 x 1 mm	2	2.5 mm	**424804**
32	Pressfit* w/o Flange	6 mm	1 x 1 mm	1	2.5 mm	**004427**
32	Pressfit*	13 mm	1 x 1 mm	1	2.5 mm	**013025**
32	Pressfit*	26 mm	1 x 1 mm	1	2.5 mm	**424797**
32	Pressfit*	26 mm	1 x 1 mm	2	2.5 mm	**424798**
32	Pressfit* w. Transfer Zone	26 mm	1 x 1 mm	2	2.5 mm	**424801**

*For contact supporting press-in tool.

DIN 41612 / IEC 60603-2 Connectors

Type D Female

Ordering Information

No. of Pins	Termination	Term. Length	Pin Dimensions	Class	Pressfit Zone	Part Number
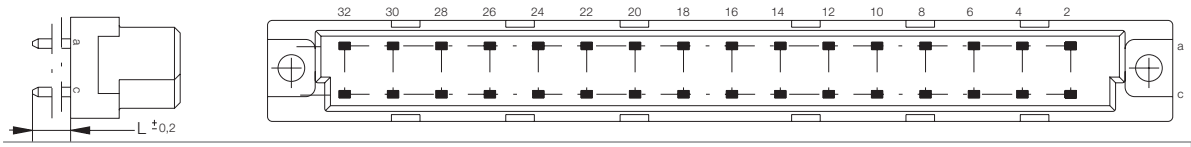						
32	Solder	4 mm	1 x 1 mm	1	–	**594569**
32	Solder	4 mm	1 x 1 mm	2	–	**594570**
32	Solder	4.5 mm	0.6 x 0.6 mm	2	–	**033428**
32	Solder	4.5 mm	1.2 x 0.6 mm	2	–	**033579**
32	Solder	20 mm	1 x 1 mm	1	–	**594566**
32	Solder	20 mm	1 x 1 mm	2	–	**594567**

DIN 41612 / IEC 60603-2 Connectors

Type E Male

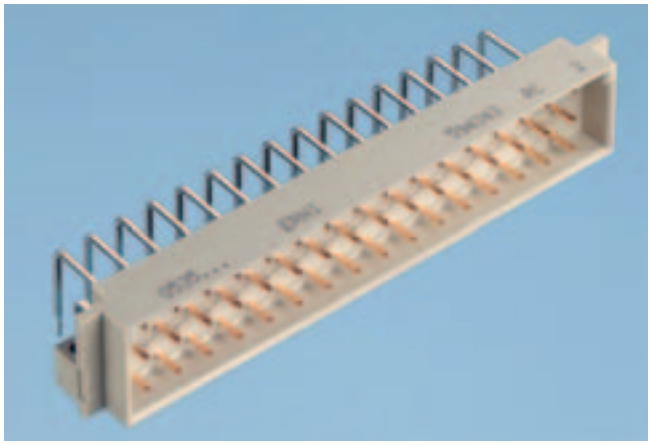

Dimensional Drawing Solder

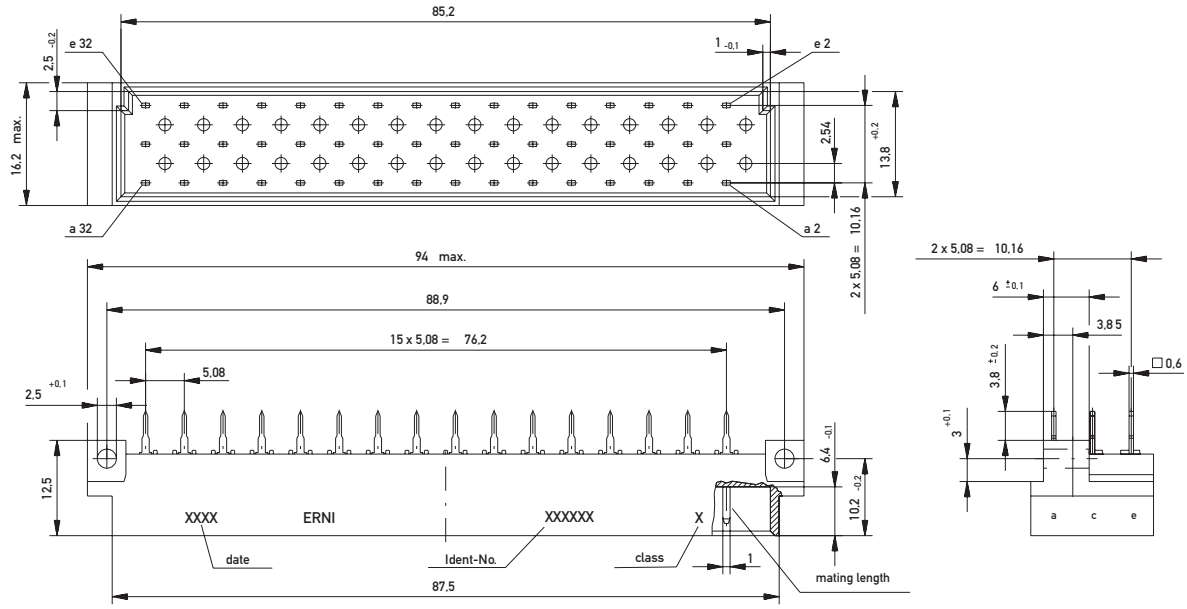

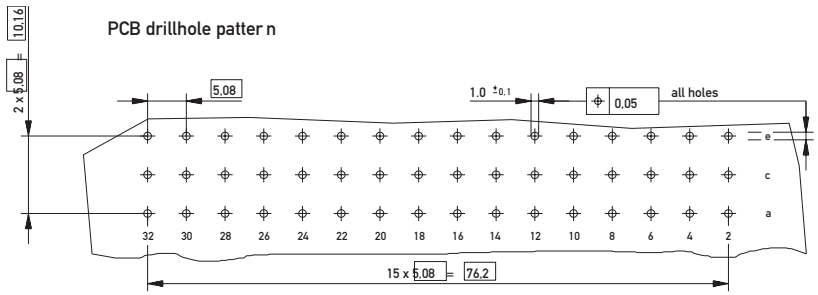

DIN 41612 / IEC 60603-2 Connectors

Type E Male

Dimensional Drawing Solder

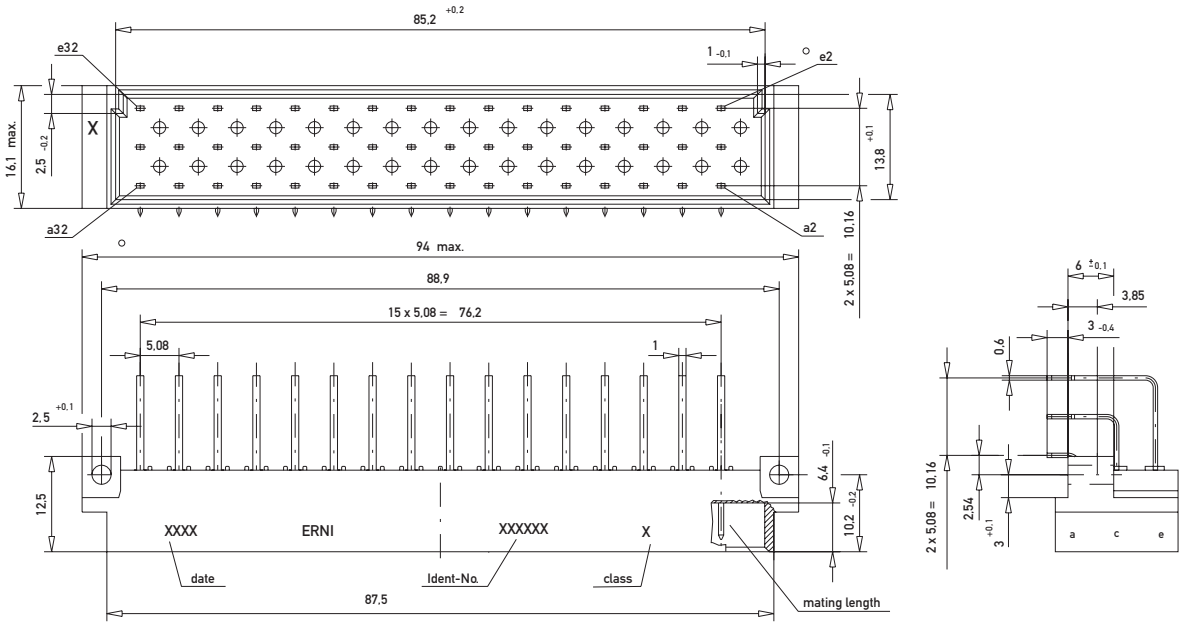

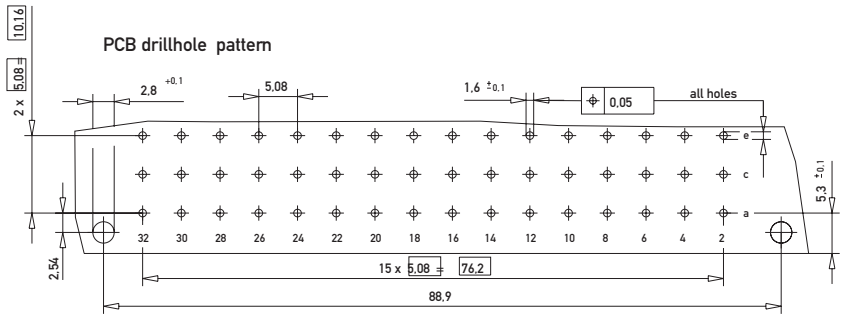

Ordering Information

No. of Pins	Termination	Term. Length	Pin Dimensions	Class	Pressfit Zone	Part Number
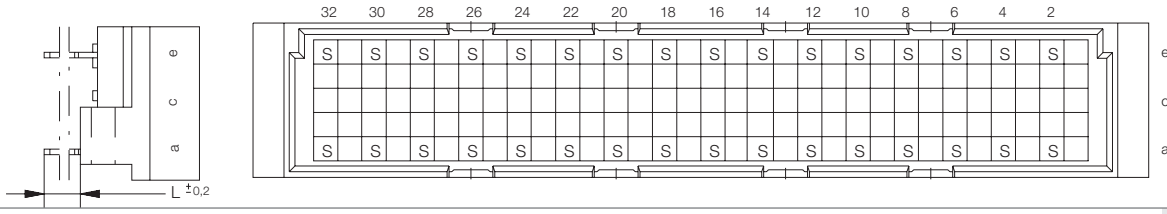						
32	Solder	3 mm	1.0 x 0.6 mm	2	–	**013414**
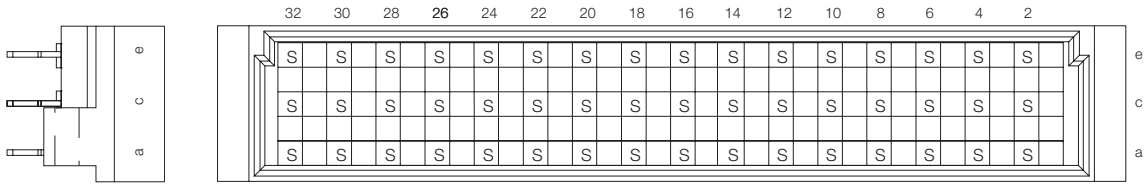						
48	Solder	3.8 mm	1.0 x 0.6 mm	2	–	**063300**
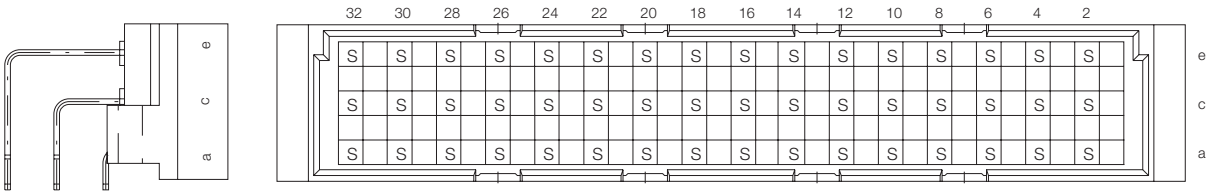						
48	Solder	3 mm	1.0 x 0.6 mm	1	–	**594802**
48	Solder	3 mm	1.0 x 0.6 mm	2	–	**594343**

DIN 41612 / IEC 60603-2 Connectors

Type E Female

Dimensional Drawing Pressfit

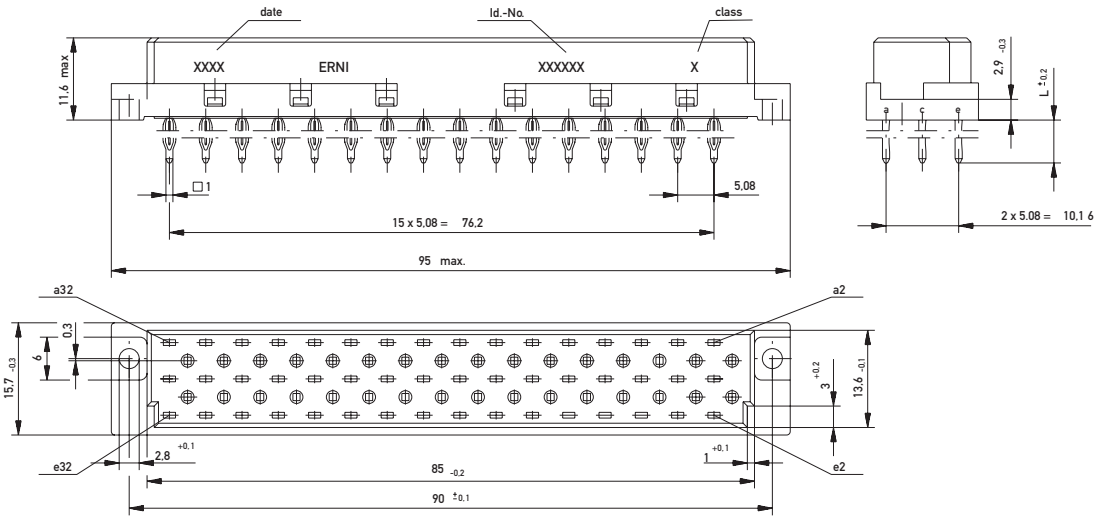

PCB drillhole pattern

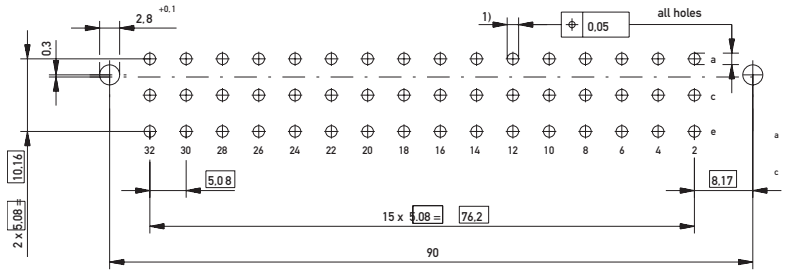

1) ø 1,6 $^{+0,09}_{-0,06}$ Diameter of finished plated-through hole

ø 1,75 -0,03 Diameter of drilled hole see drawing 114407

Dimensional Drawing Solder

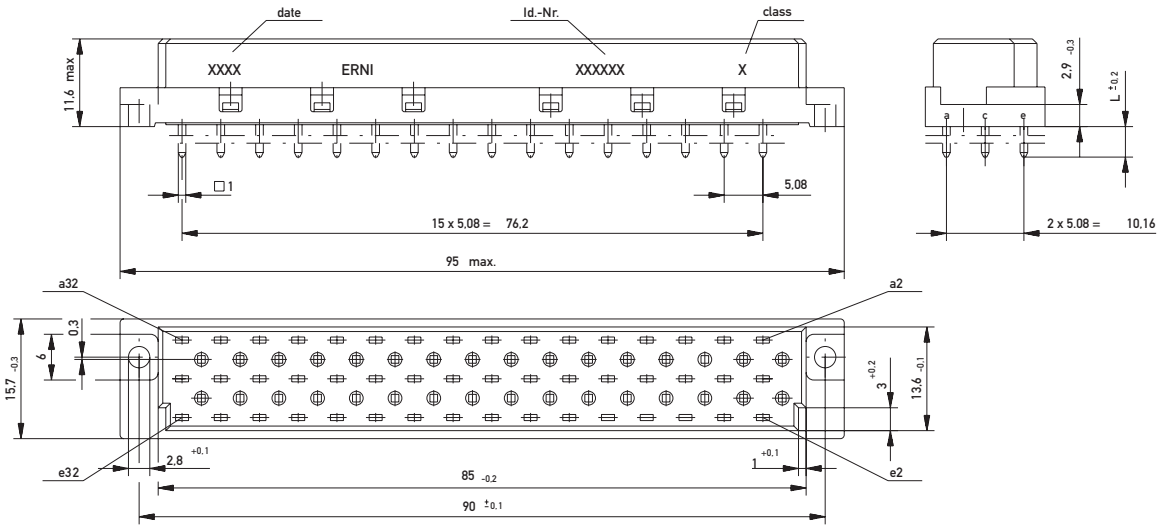

PCB drillhole pattern

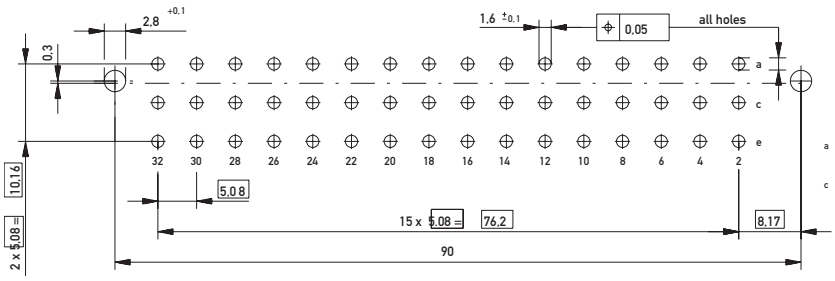

DIN 41612 / IEC 60603-2 Connectors

Type E Female

Ordering Information

No. of Pins	Termination	Term. Length	Pin Dimensions	Class	Pressfit Zone	Part Number
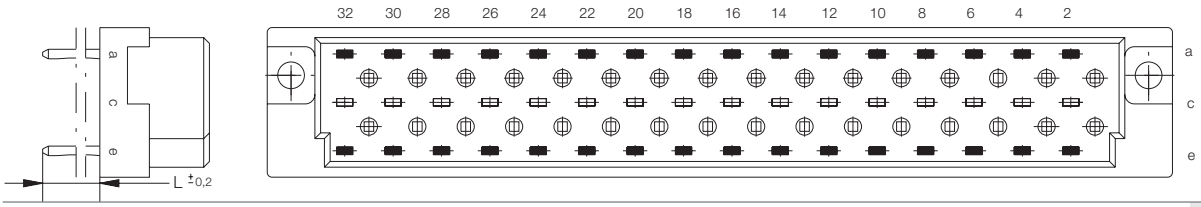						
32	Pressfit*	6 mm	1 x 1 mm	2	2.5 mm	**004177**
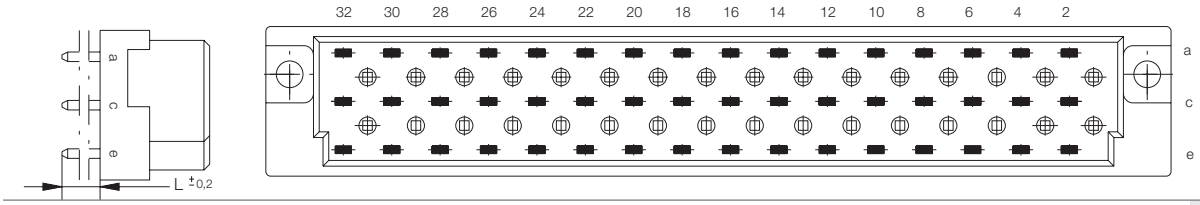						
48	Pressfit	4.5 mm	0.6 x 0.6 mm	2	3 mm	**063465**
48	Pressfit*	6 mm	1 x 1 mm	1	2.5 mm	**424812**
48	Pressfit*	6 mm	1 x 1 mm	2	2.5 mm	**424813**
48	Pressfit*	13 mm	1 x 1 mm	1	2.5 mm	**013026**
48	Pressfit w. Transfer Zone	13 mm	0.6 x 0.6 mm	2	2.5 mm	**043064**
48	Pressfit*	26 mm	1 x 1 mm	1	2.5 mm	**424806**
48	Pressfit*	26 mm	1 x 1 mm	2	2.5 mm	**424807**
48	Pressfit* w. Transfer Zone	26 mm	1 x 1 mm	2	2.5 mm	**424810**

* For contact supporting press-in tool.

Ordering Information

No. of Pins	Termination	Term. Length	Pin Dimensions	Class	Pressfit Zone	Part Number
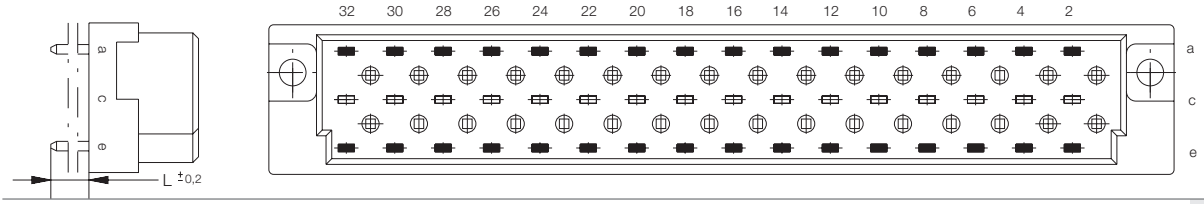						
32	Solder	4 mm	1 x 1 mm	2	–	**013653**
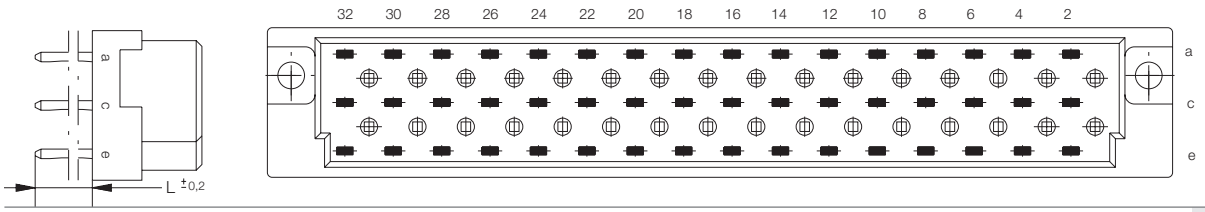						
48	Solder	4 mm	1 x 1 mm	1	–	**594578**
48	Solder	4 mm	1 x 1 mm	2	–	**594579**
48	Solder	4.5 mm	0.6 x 0.6 mm	2	–	**063048**
48	Solder	4.5 mm	1.2 x 0.6 mm	2	–	**063046**
48	Solder	20 mm	1 x 1 mm	1	–	**594575**
48	Solder	20 mm	1 x 1 mm	2	–	**594576**
48	Solder w. Transfer Zone	26 mm	1 x 1 mm	2	–	**003382**
48	Solder	8 mm	0.6 x 2.0 mm	2	–	**063049**

DIN 41612 / IEC 60603-2 Connectors

Type F Male

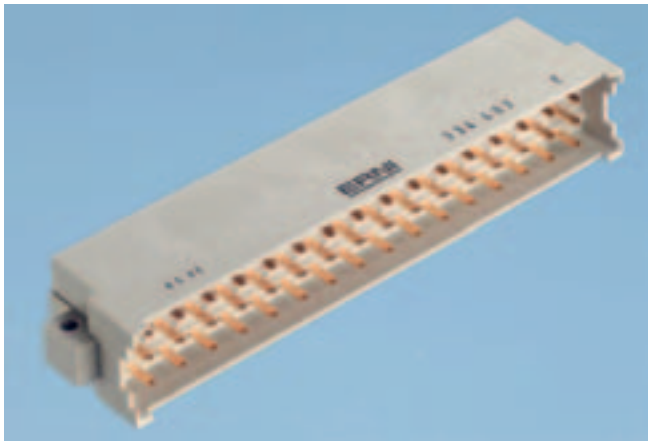

Dimensional Drawing Solder

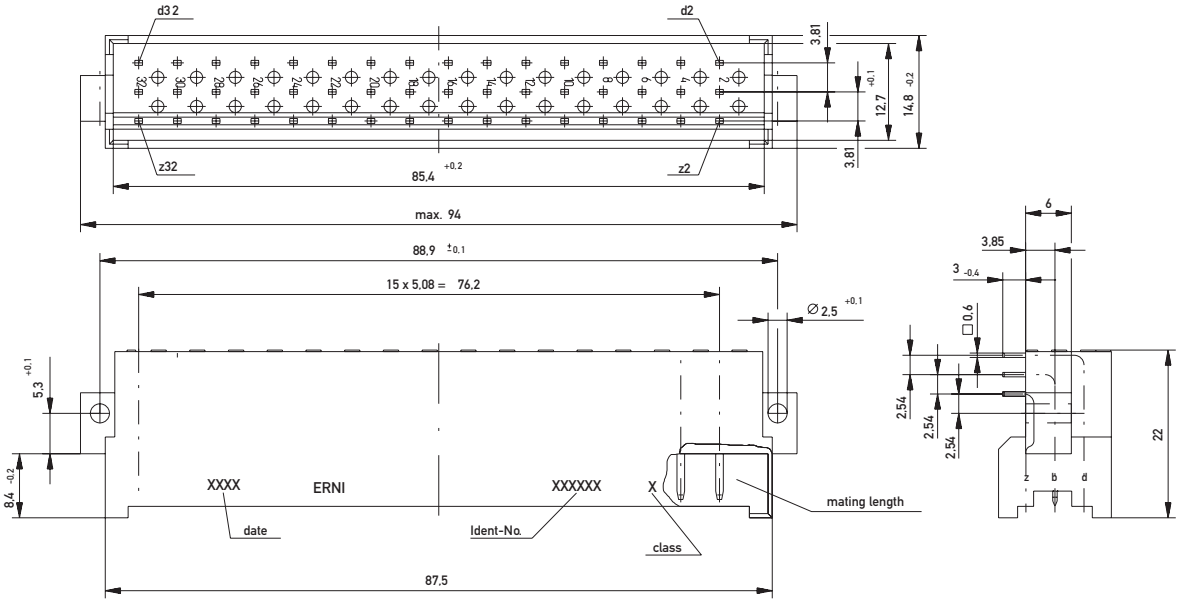

PCB drillhole pattern

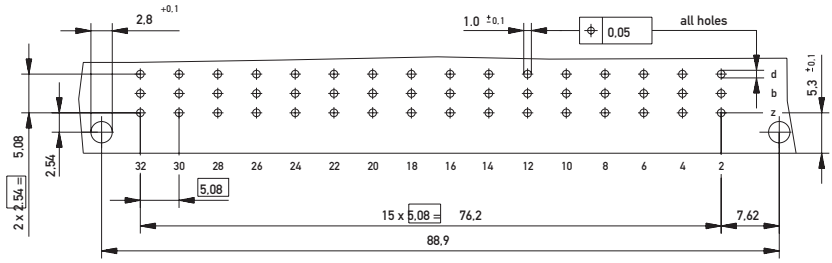

DIN 41612 / IEC 60603-2 Connectors

Type F Male

Ordering Information

No. of Pins	Termination	Term. Length	Pin Dimensions	Class	Pressfit Zone	Part Number
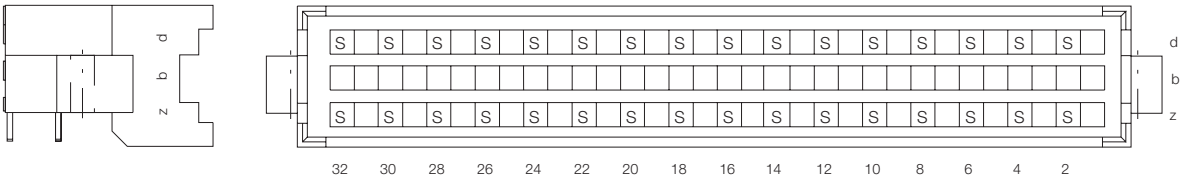						
32	Solder	3 mm	0.6 x 0.6 mm	1	–	**303284**
32	Solder	3 mm	0.6 x 0.6 mm	2	–	**303484**
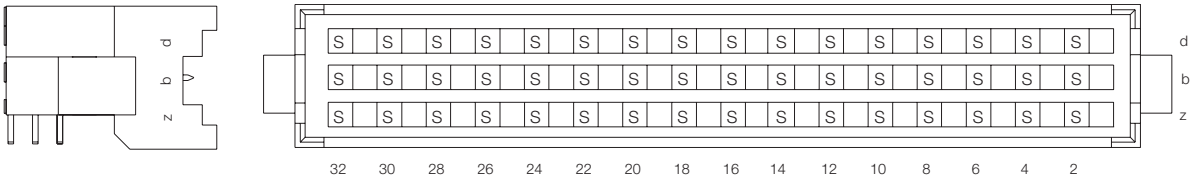						
48	Solder	3 mm	0.6 x 0.6 mm	1	–	**334203**
48	Solder	3 mm	0.6 x 0.6 mm	2	–	**334403**

DIN 41612 / IEC 60603-2 Connectors

Type F Female

Dimensional Drawing Pressfit Type F

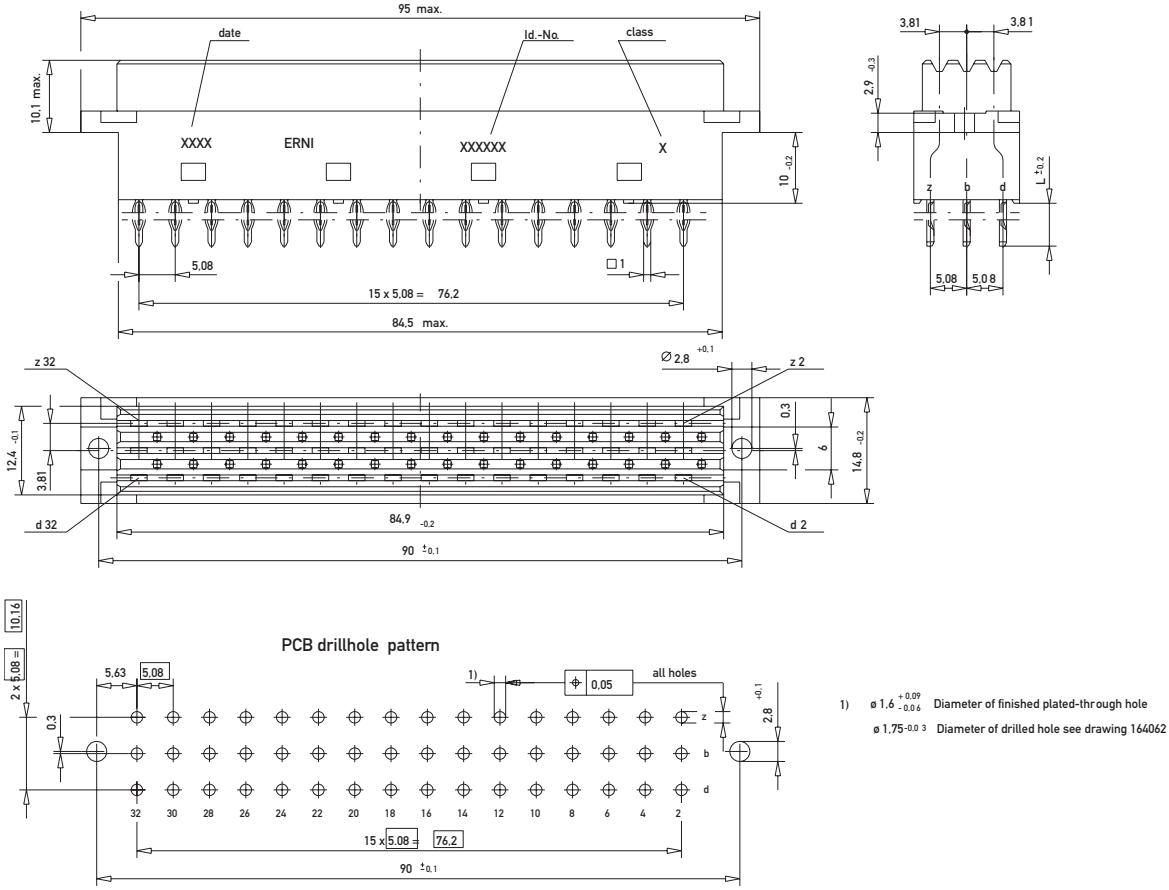

DIN 41612 / IEC 60603-2 Connectors

Type F Female

Dimensional Drawing Pressfit Type F flat

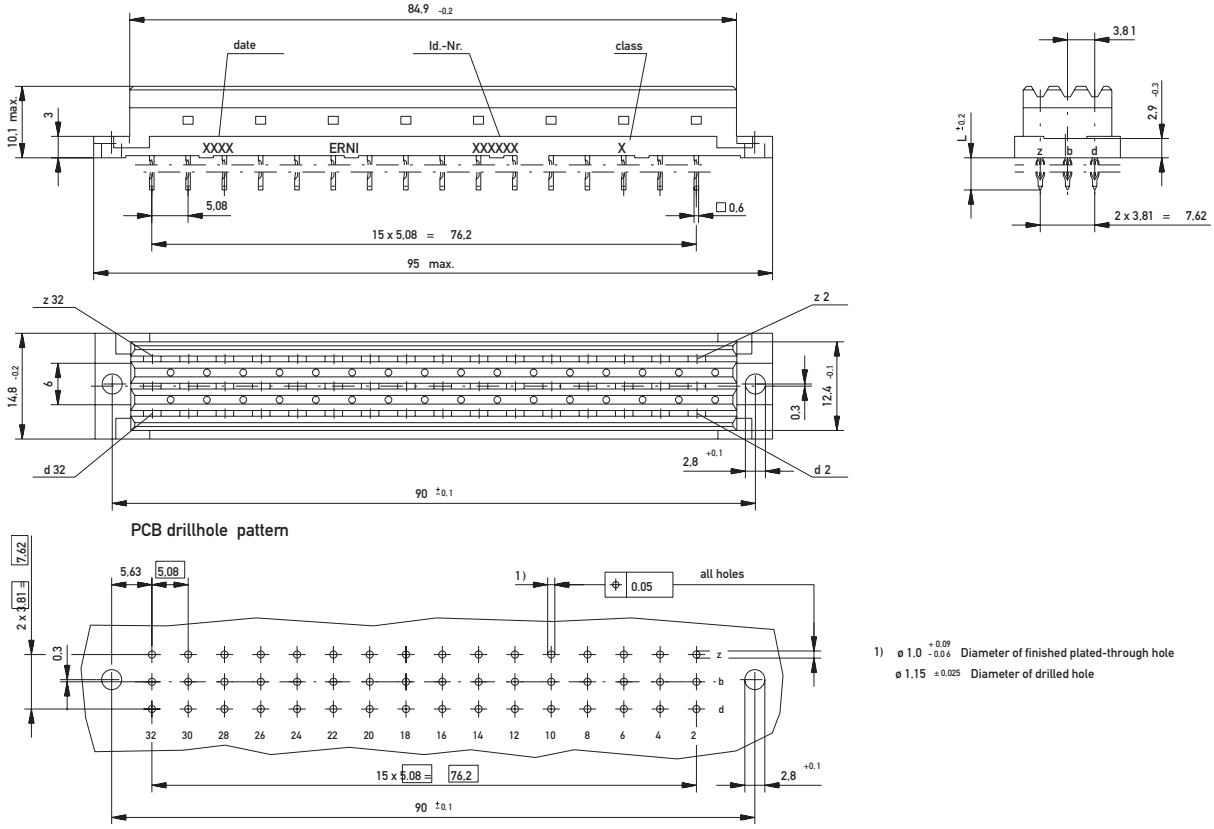

1) ø 1,0 $^{+0,09}_{-0,06}$ Diameter of finished plated-through hole
ø 1,15 ±0,025 Diameter of drilled hole

Dimensional Drawing Solder Type F

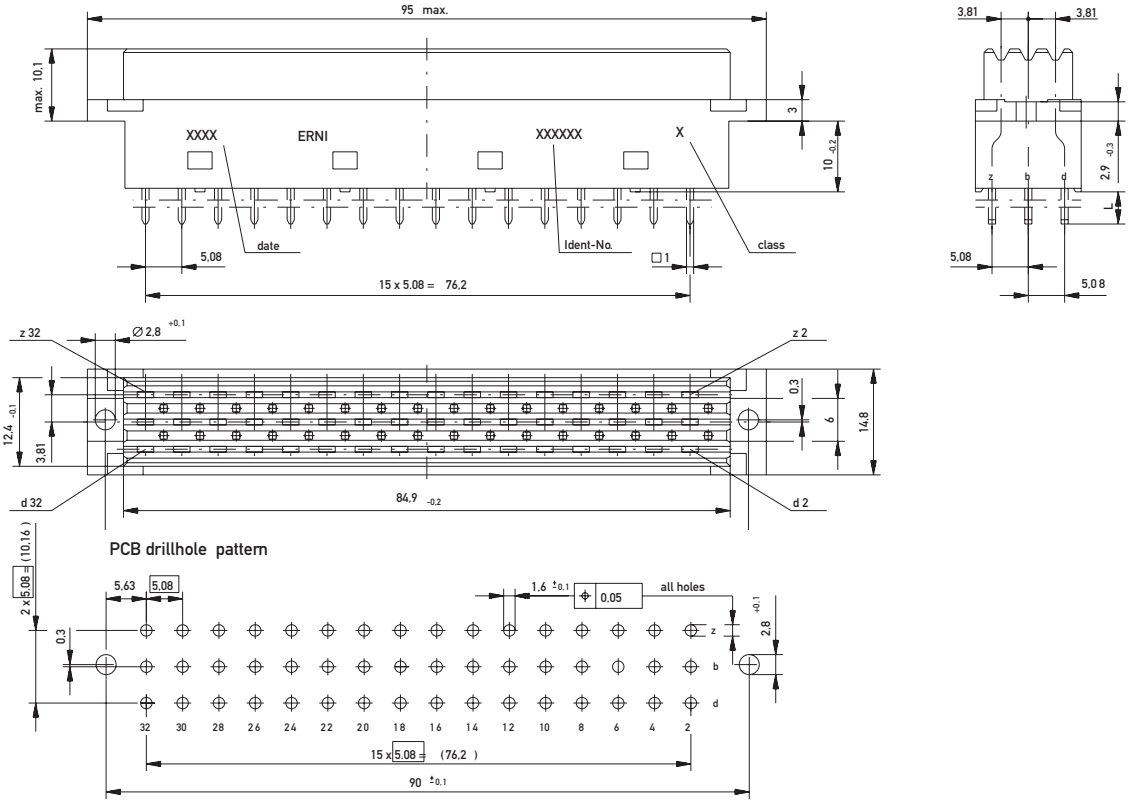

Dimensional Drawing Solder Type F flat

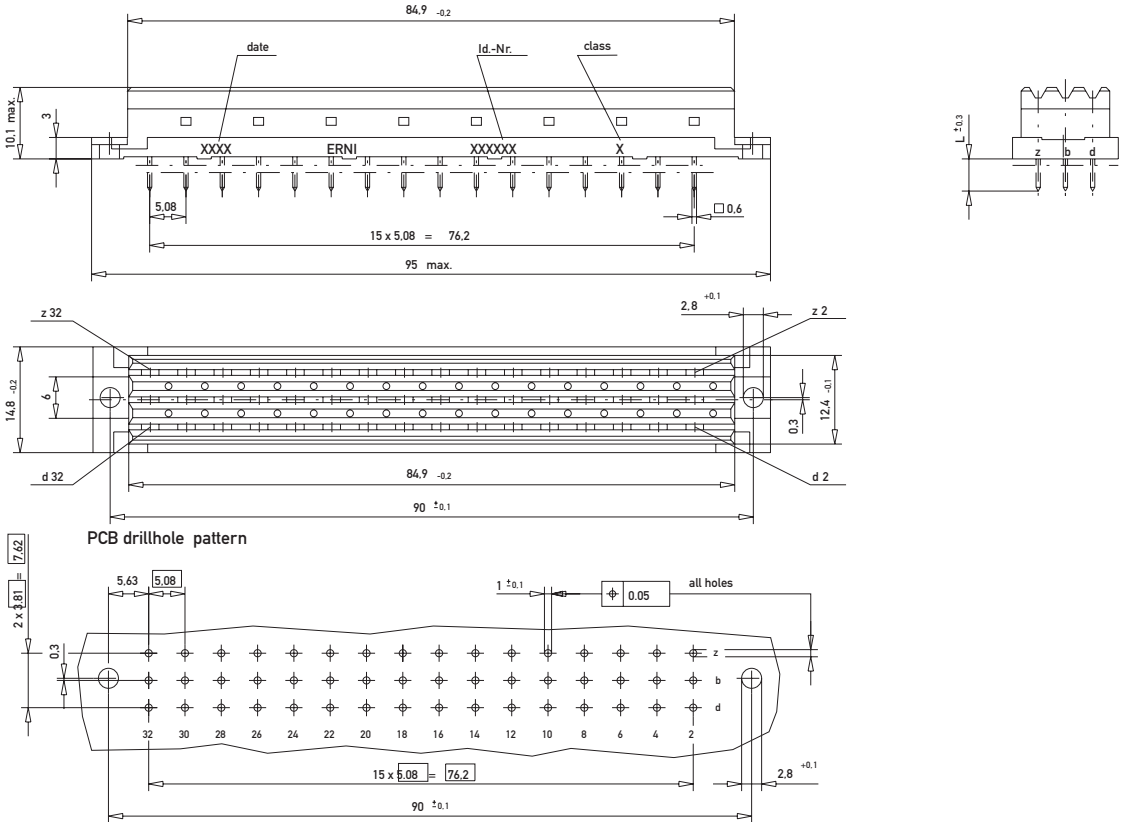

DIN 41612 / IEC 60603-2 Connectors

Type F Female

Ordering Information

No. of Pins	Termination	Term. Length	Pin Dimensions	Class	Pressfit Zone	Part Number
32	Pressfit	4.5 mm	0.6 x 0.6 mm	2	2 mm	**063358**
48	Pressfit	4.5 mm	0.6 x 0.6 mm	2	2 mm	**054756**
48	Pressfit	6 mm	1 x 1 mm	1	2.5 mm	**013970**
48	Pressfit	6 mm	1 x 1 mm	2	2.5 mm	**594491**
48	Pressfit	22 mm	1 x 1 mm	1	2.5 mm	**593990**
48	Pressfit	22 mm	1 x 1 mm	2	2.5 mm	**593991**

Ordering Information

No. of Pins	Termination	Term. Length	Pin Dimensions	Class	Pressfit Zone	Part Number
32	Solder	4.5 mm	0.6 x 0.6 mm	2	–	**063357**
32	Solder	4.5 mm	1 x 1 mm	2	–	**314425**
32	Solder	22 mm	1 x 1 mm	2	–	**314404**
32	Solder	10 mm	0.8 x 2.4 mm	1	–	**314447**
48	Solder	4.5 mm	0.6 x 0.6 mm	2	–	**054755**

Ordering Information

No. of Pins	Termination	Term. Length	Pin Dimensions	Class	Pressfit Zone	Part Number
48	Solder	4.5 mm	1 x 1 mm	1	–	**344265**
48	Solder	4.5 mm	1 x 1 mm	2	–	**344465**
48	Solder	22 mm	1 x 1 mm	1	–	**344234**
48	Solder	22 mm	1 x 1 mm	2	–	**344434**

48	Solder	z, d = 10.0 mm b = 17 mm	0.8 x 2.4 mm	1	–	**344451**

DIN 41612 / IEC 60603-2 Connectors

Type M Male

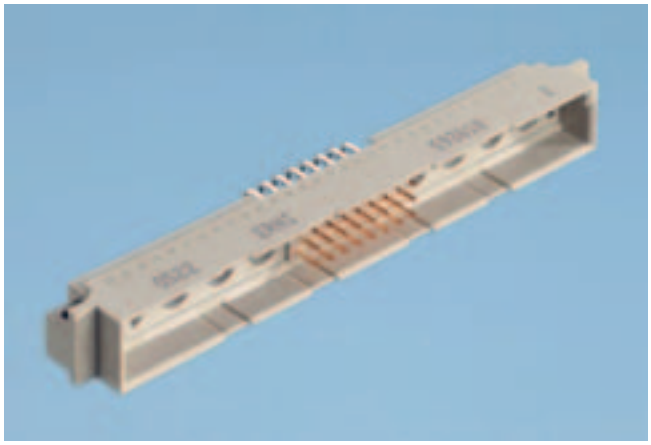

The Type M mixed connector series based on a 100" (2.54mm) pitch in accordance with the DIN41612/IEC 60603-2 specification. This series of connectors is designed to accommodate a variety of coaxial and high current contacts which are also used in other popular connector systems such as the 2mm Hard Metric Type M connectors.
The male and female connectors have 2, 4, 6, 8 or 10 empty "cavities" to accommodate the special contacts.
The versatility of mixing both signal and either high current or coax contacts increases the usage of this connector in tele-communication and data processing applications.

Dimensional Drawing Solder

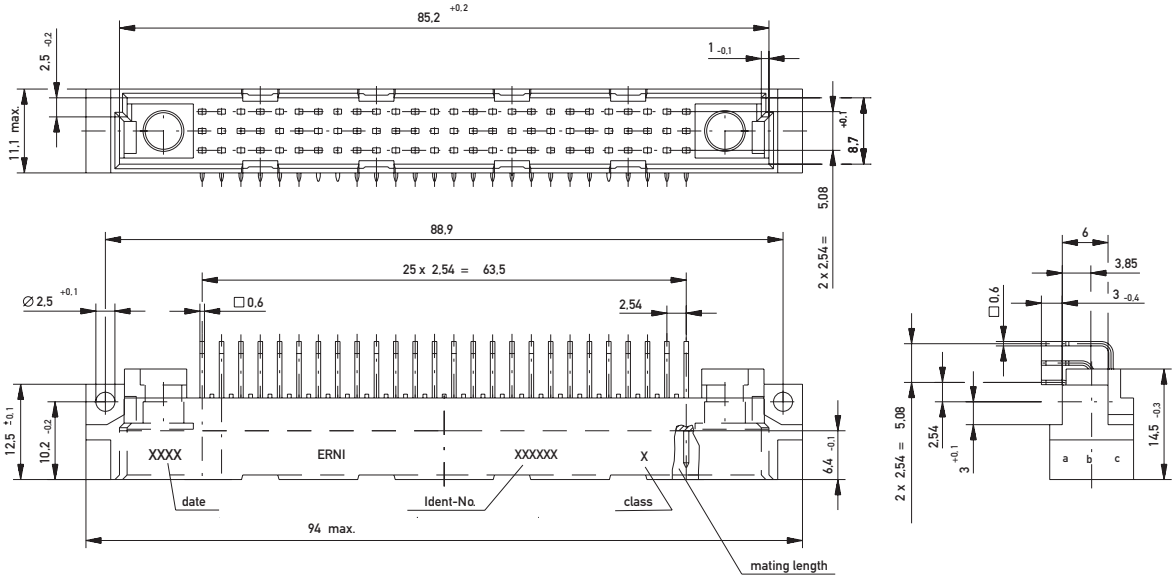

PCB drillhole pattern

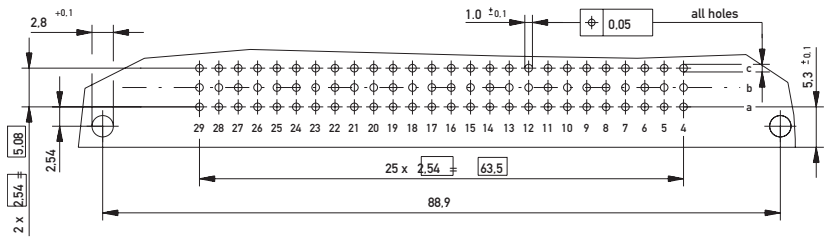

DIN 41612 / IEC 60603-2 Connectors

Type M Male

Ordering Information

No. of Pins	Termination	Term. Length	Pin Dimensions	Class	Pressfit Zone	Part Number
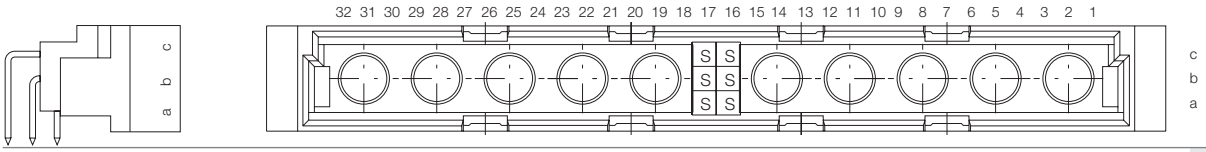						
6-10	Solder	3 mm	0.6 x 0.6 mm	1	–	**024201**
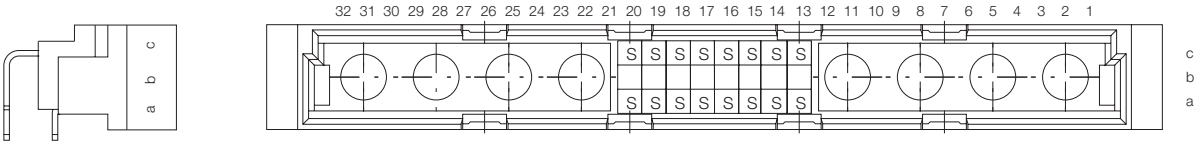						
16-8	Solder	3 mm	0.6 x 0.6 mm	1	–	**594165**
16-8	Solder	3 mm	0.6 x 0.6 mm	2	–	**594166**
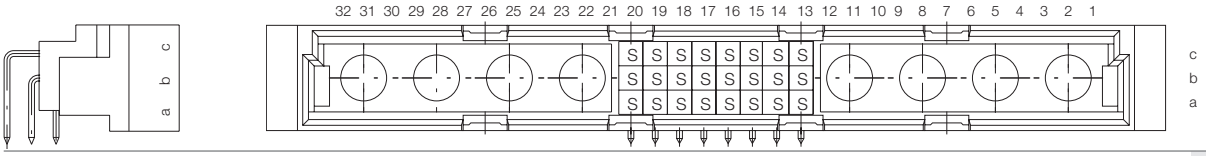						
24-8	Solder	3 mm	0.6 x 0.6 mm	1	–	**593817**
24-8	Solder	3 mm	0.6 x 0.6 mm	2	–	**593818**
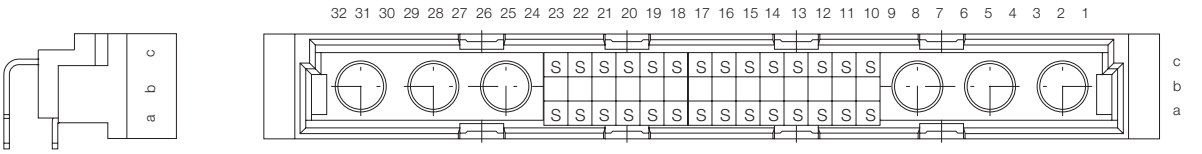						
28-6	Solder	3 mm	0.6 x 0.6 mm	1	–	**594162**
28-6	Solder	3 mm	0.6 x 0.6 mm	2	–	**594163**
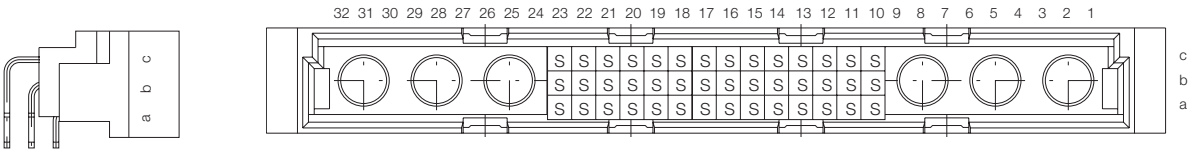						
42-6	Solder	3 mm	0.6 x 0.6 mm	1	–	**593814**
42-6	Solder	3 mm	0.6 x 0.6 mm	2	–	**593815**

DIN 41612 / IEC 60603-2 Connectors

Type M Male

Ordering Information

No. of Pins	Termination	Term. Length	Pin Dimensions	Class	Pressfit Zone	Part Number
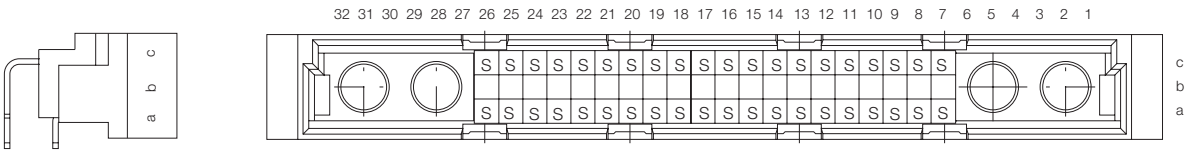						
40-4	Solder	3 mm	0.6 x 0.6 mm	1	–	**594159**
40-4	Solder	3 mm	0.6 x 0.6 mm	2	–	**594160**
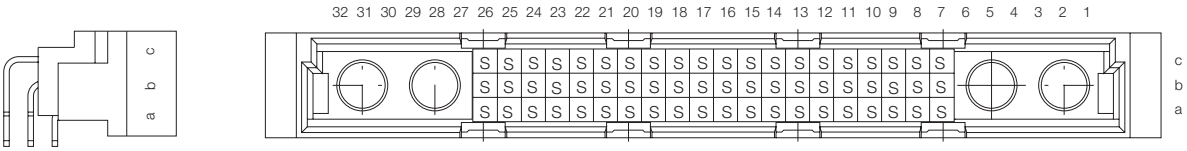						
60-4	Solder	3 mm	0.6 x 0.6 mm	1	–	**593811**
60-4	Solder	3 mm	0.6 x 0.6 mm	2	–	**593812**
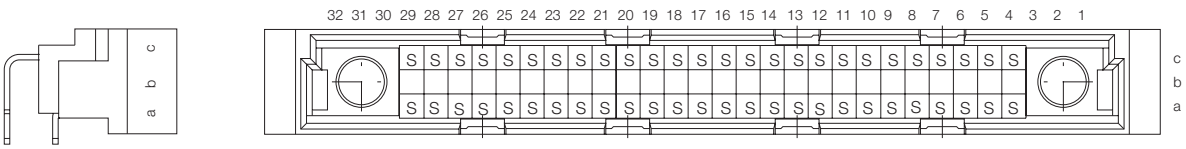						
52-2	Solder	3 mm	0.6 x 0.6 mm	2	–	**594157**
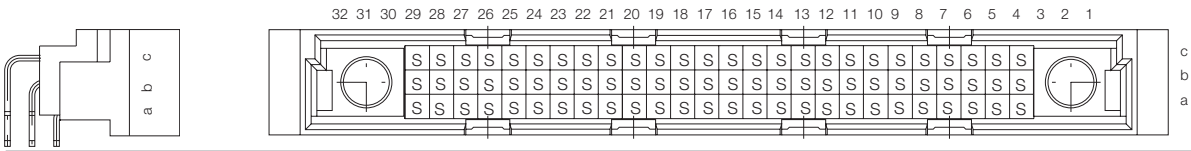						
78-2	Solder	3 mm	0.6 x 0.6 mm	1	–	**593808**
78-2	Solder	3 mm	0.6 x 0.6 mm	2	–	**593809**

DIN 41612 / IEC 60603-2 Connectors

Type M Female

Dimensional Drawing Pressfit

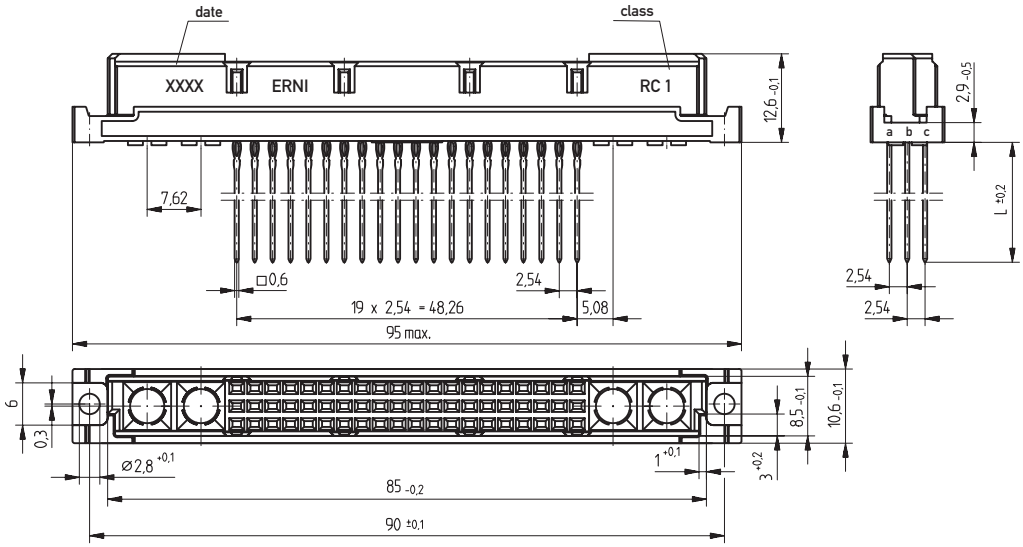

PCB drillhole pattern

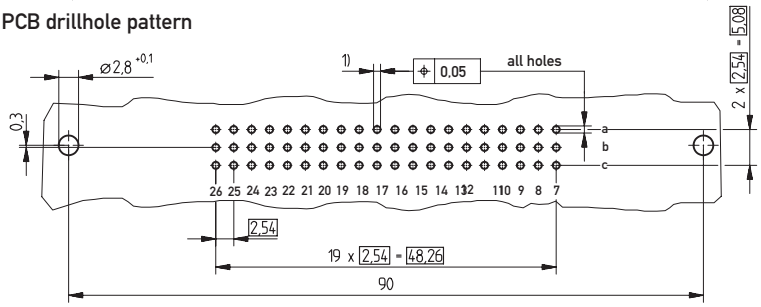

1) ø 1,0 +0,09 −0,06 Diameter of finished plated-through hole
ø 1,15 ±0,025 Diameter of drilled hole

DIN 41612 / IEC 60603-2 Connectors

Type M Female

Dimensional Drawing Pressfit Modified

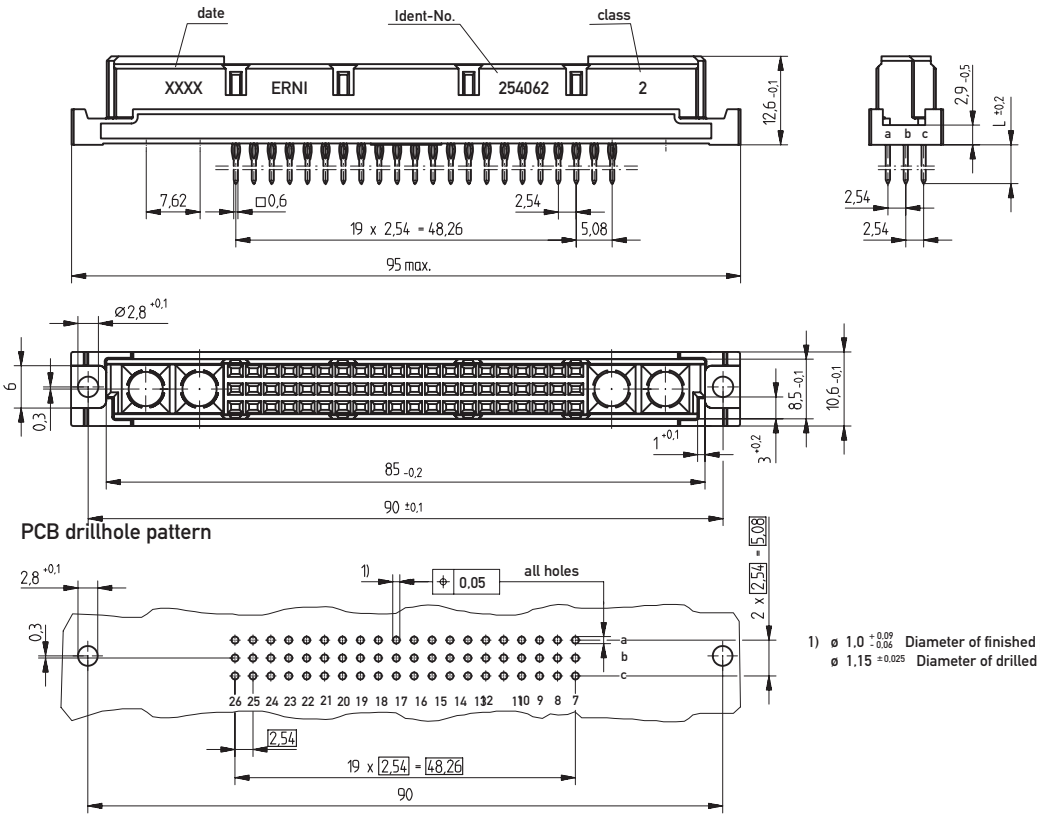

1) ø 1,0 $^{+0,09}_{-0,06}$ Diameter of finished plated-through hole
ø 1,15 ±0,025 Diameter of drilled hole

Dimensional Drawing Solder

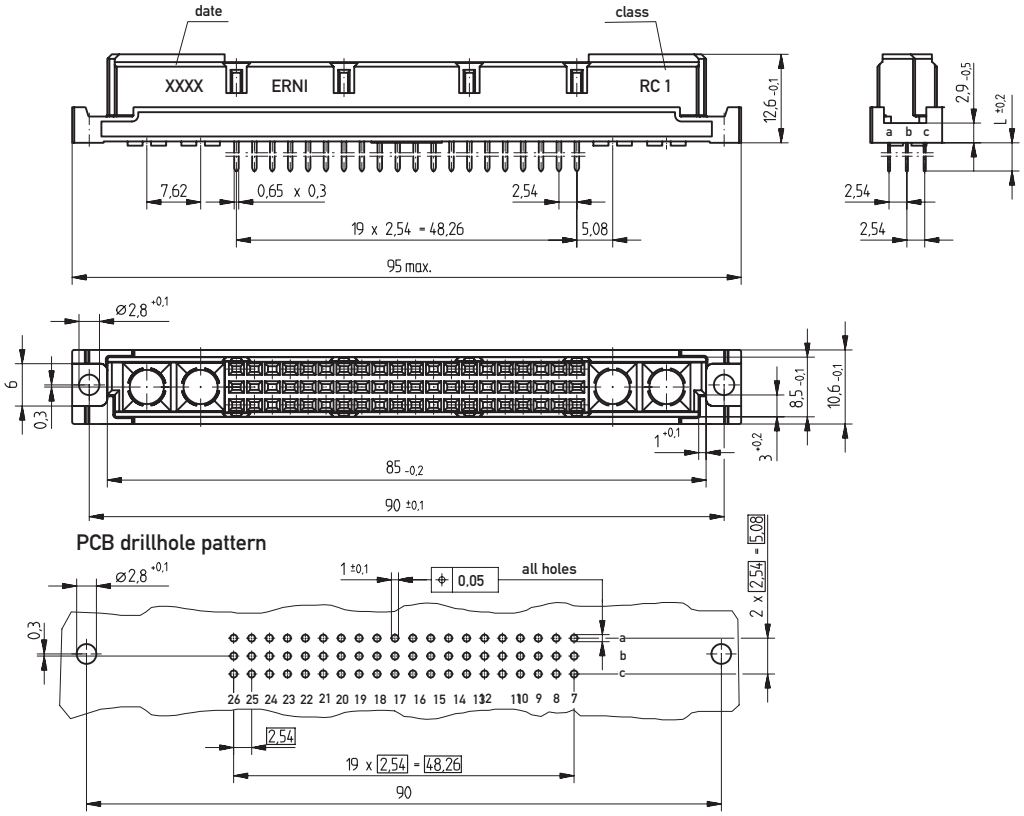

DIN 41612 / IEC 60603-2 Connectors

Type M Female

Ordering Information

No. of Pins	Termination	Term. Length	Pin Dimensions	Class	Pressfit Zone	Part Number
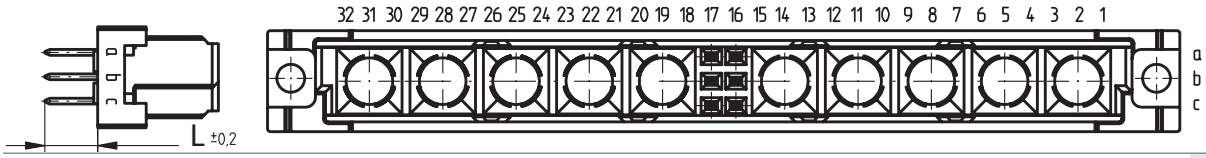						
6-10	Pressfit	5.5 mm	0.6 x 0.6 mm	2	3 mm	**354252**
6-10	Pressfit	17 mm	0.6 x 0.6 mm	2	3 mm	**364366**
6-10	Pressfit Modified	5.5 mm	0.6 x 0.6 mm	2	3 mm	**354197**
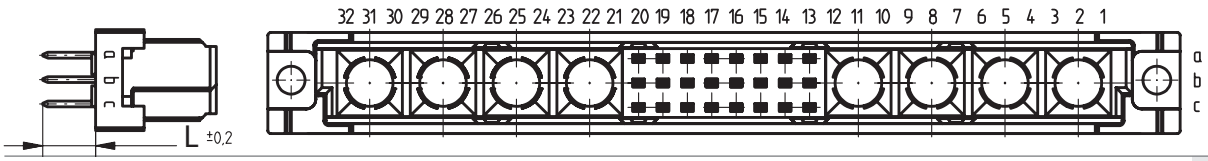						
24-8	Pressfit	5.5 mm	0.6 x 0.6 mm	1	3 mm	**354246**
24-8	Pressfit	5.5 mm	0.6 x 0.6 mm	2	3 mm	**354116**
24-8	Pressfit	17 mm	0.6 x 0.6 mm	2	3 mm	**354247**
24-8	Pressfit Modified	5.5 mm	0.6 x 0.6 mm	2	3 mm	**294743**
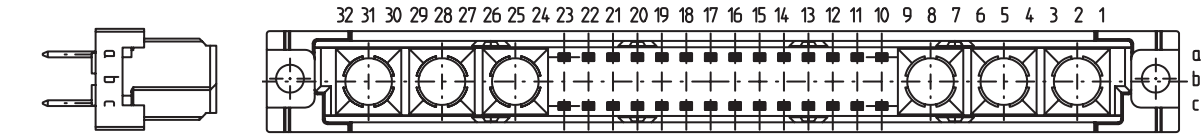						
28-6	Pressfit	5.5 mm	0.6 x 0.6 mm	2	3 mm	**374849**
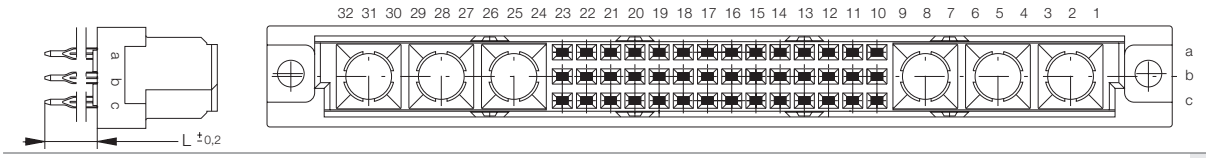						
42-6	Pressfit	5.5 mm	0.6 x 0.6 mm	2	3 mm	**294740**
42-6	Pressfit	17 mm	0.6 x 0.6 mm	2	3 mm	**294732**
42-6	Pressfit Modified	5.5 mm	0.6 x 0.6 mm	2	–	**294736**

Ordering Information

No. of Pins	Termination	Term. Length	Pin Dimensions	Class	Pressfit Zone	Part Number
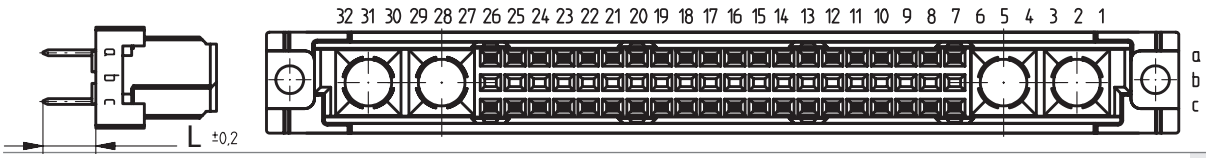						
40-4	Pressfit	5.5 mm	0.6 x 0.6 mm	2	3 mm	**294737**
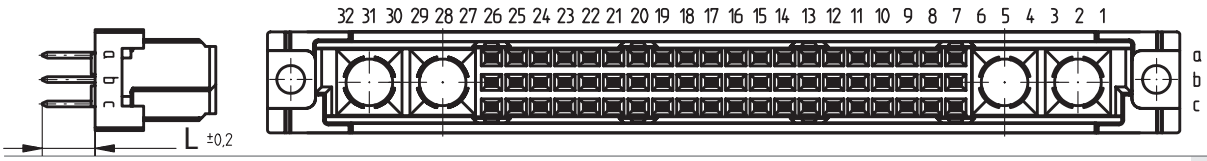						
60-4	Pressfit	5.5 mm	0.6 x 0.6 mm	1	3 mm	**354139**
60-4	Pressfit	5.5 mm	0.6 x 0.6 mm	2	3 mm	**294728**
60-4	Pressfit	17 mm	0.6 x 0.6 mm	1	3 mm	**294710**
60-4	Pressfit Modified	5.5 mm	0.6 x 0.6 mm	2	–	**254062**
60-4	Pressfit	17 mm	0.6 x 0.6 mm	2	3 mm	**354140**
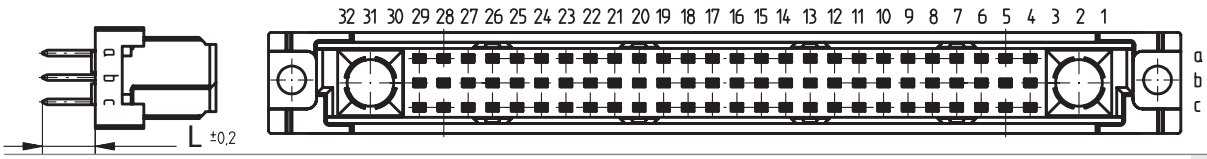						
78-2	Pressfit	5.5 mm	0.6 x 0.6 mm	2	3 mm	**294733**

Ordering Information

No. of Pins	Termination	Term. Length	Pin Dimensions	Class	Pressfit Zone	Part Number
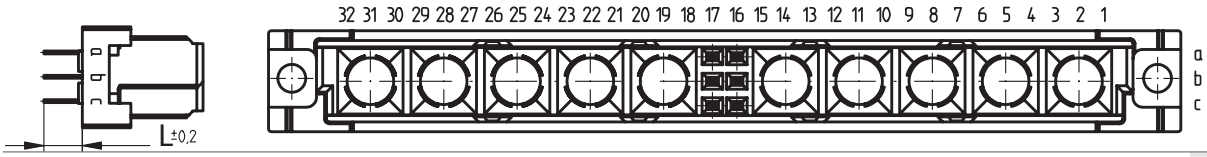						
6-10	Solder	4 mm	0.65 x 0.3 mm	1	–	**294712**
6-10	Solder	13 mm	0.6 x 0.6 mm	1	–	**354152**
6-10	Solder	13 mm	0.6 x 0.6 mm	2	–	**354223**
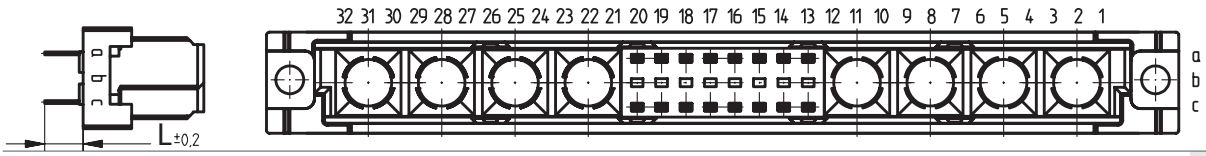						
16-8	Solder	4 mm	0.65 x 0.3 mm	1	–	**354239**
16-8	Solder	4 mm	0.65 x 0.3 mm	2	–	**354162**
16-8	Solder	13 mm	0.6 x 0.6 mm	2	–	**354166**
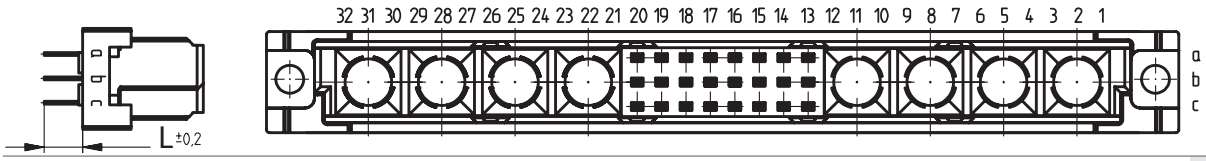						
24-8	Solder	4 mm	0.65 x 0.3 mm	1	–	**354163**
24-8	Solder	4 mm	0.65 x 0.3 mm	2	–	**294711**
24-8	Solder	13 mm	0.6 x 0.6 mm	1	–	**354157**
24-8	Solder	13 mm	0.6 x 0.6 mm	2	–	**354219**

Ordering Information

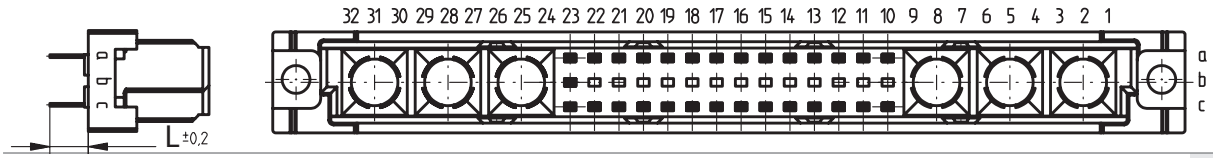

No. of Pins	Termination	Term. Length	Pin Dimensions	Class	Pressfit Zone	Part Number
28-6	Solder	4 mm	0.65 x 0.3 mm	2	–	**354226**
28-6	Solder	4 mm	0.6 x 0.6 mm	1	–	**354229**
28-6	Solder	13 mm	0.6 x 0.6 mm	2	–	**354164**

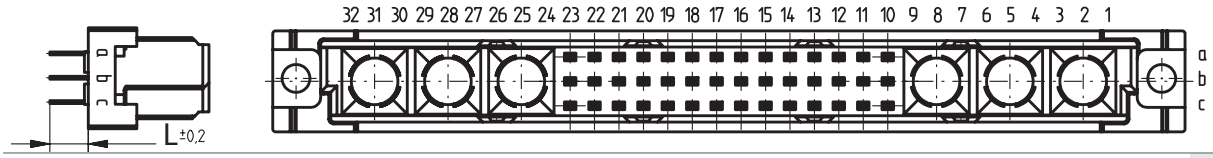

42-6	Solder	4 mm	0.65 x 0.3 mm	1	–	**354112**
42-6	Solder	4 mm	0.65 x 0.3 mm	2	–	**354108**
42-6	Solder	13 mm	0.6 x 0.6 mm	1	–	**354215**
42-6	Solder	13 mm	0.6 x 0.6 mm	2	–	**354173**

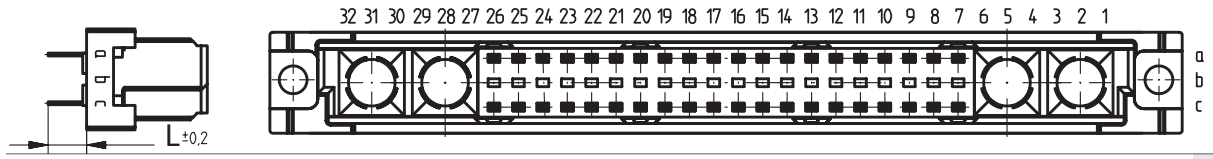

40-4	Solder	4 mm	0.65 x 0.3 mm	1	–	**354240**
40-4	Solder	4 mm	0.65 x 0.3 mm	2	–	**354161**
40-4	Solder	13 mm	0.6 x 0.6 mm	2	–	**354160**

Ordering Information

No. of Pins	Termination	Term. Length	Pin Dimensions	Class	Pressfit Zone	Part Number
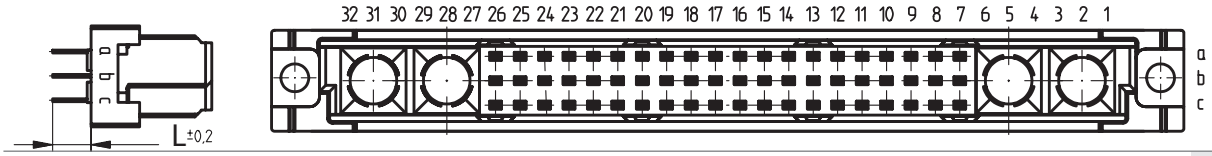						
60-4	Solder	4 mm	0.65 x 0.3 mm	1	–	**354133**
60-4	Solder	4 mm	0.65 x 0.3 mm	2	–	**354111**
60-4	Solder	13 mm	0.6 x 0.6 mm	1	–	**354156**
60-4	Solder	13 mm	0.6 x 0.6 mm	2	–	**354165**
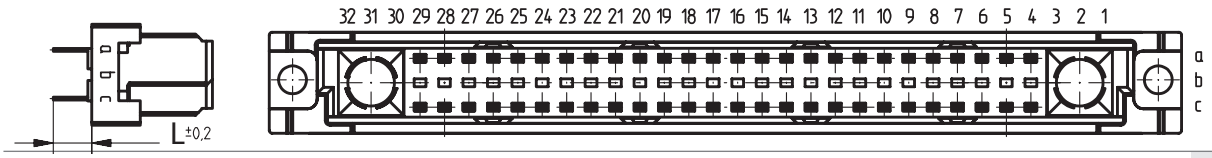						
52-2	Solder	4 mm	0.65 x 0.3 mm	2	–	**354110**
52-2	Solder	13 mm	0.6 x 0.6 mm	2	–	**354109**
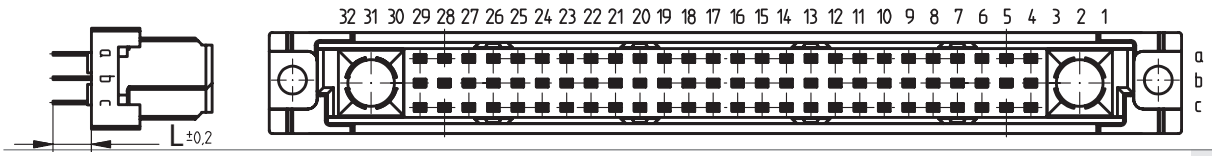						
78-2	Solder	4 mm	0.65 x 0.3 mm	1	–	**354158**
78-2	Solder	4 mm	0.65 x 0.3 mm	2	–	**354117**
78-2	Solder	13 mm	0.6 x 0.6 mm	1	–	**354155**
78-2	Solder	13 mm	0.6 x 0.6 mm	2	–	**294730**

Special Contacts, Electrical and Mechanical Specifications

Coaxial Contacts	Standard	
Technical Specifications		
Temperature Range	DIN EN 60068-1	-55/125 °C
Wave impedance		50 Ω and 75 Ω
Dielectric withstanding voltage 50 Hz	IEC 60512-2 Test 4a	750 V
Insulation resistance	IEC 60512-2 Test 3a	≥ 10^{10} Ω
Volume resistance Inner conductor Outer conductor	DIN 41640-5 Test 2b	 ≤ 6 mΩ ≤ 3 mΩ
Frequency range		max. 3 GHz
Reflection factor	DIN 47275-3	max. 0.05 to 1 GHz max. 0.07 to 4 GHz max. 0.10 to 10 GHz
Materials		
Outer Conductor		Cu Alloy
Female contact		Cu Be hardened
Insulation part		PTFE
Crimp Sleeve		Cu

PERFORMANCE CLASSES

Class 1 Meets the requirements of DIN 41626. Internal conductor and external conductor gold-plated. Performance class 1 ≥ 500 mating cycles.

Class 2 As per performance class 1 but performance class 2 ≥ 400 mating cycles.

High Current Contacts	Standard	
Technical Specifications		
Temperature Range	DIN EN 60068-1	-55/125 °C
Current-Carrying Capacity	DIN 41640-3 Test 5b	30 A at 70° C
Dielectric withstanding voltage 50 Hz	IEC 60512-2 Test 4a	2500 V
Volume resistance	DIN 41640-5 Test 2b	≤ 1 mΩ
Materials		
Male Contact		Cu Alloy
Female Contact		Cu Be hardened

PERFORMANCE CLASSES

Class 1 Meets the requirements of DIN 41626. Contacts are gold-plated. Performance class 1 ≥ 500 mating cycles

Class 2 As per performance class 1 but performance class 2 ≥ 400 mating cycles.

DIN 41612 / IEC 60603-2 Connectors

Special Contacts for Type M Male and Female

These special contacts, available in both Coax and High Current are inserted into the empty cavities provided in the Type M connector. The special contacts must be ordered separately as they are typically crimped or soldered onto the cable before insertion into the connector housing.
The coax contacts are available in 50 and 75 Ω in both right angle and straight configurations. ERNI offers contacts that can be crimped or soldered to cable or even soldered directly onto the PC board.
The high current contacts are available for 10, 20 and 40 amps. They can be soldered directly to the board or soldered or crimped to cable. Again, they are offered in both right angle or straight. Special high current versions are also available to assemble into the board. The pressfit contacts are designed to be used with the modified female connectors and to sit flush on the board.
Both the coax and high current contacts are simply snapped into the housing. No special tooling is required for insertion with the exception of the pressfit high current contact. A pressfit tool is required to press the entire assembly with the power contact into the board. An extraction tool is available if it would become necessary to remove any one of the special contacts.

Coaxial Male Contacts For DIN Backplane Connectors

Part-No.	RATING	CLASS	DESCRIPTION	CABLE
053400	50 ohm	1	Straight, double braided	RG316 DB
594213	50 ohm	1	Straight	RG174/U, RG188A/U, RG316/U
053408	75 ohm	1	Straight	RG179B/U, RG187A/U
594215	50 ohm	1	Right Angle	RG174/U, RG188A/U, RG316/U
064755	50 ohm	2	Right Angle for .125” panel	RG174/U, RG188A/U, RG316/U
064757	50 ohm	1	Right Angle, thick back-plane, double braided	RG316 DB
064312*	50 ohm	1	Straight, 3 leg (sits flush on PCB)	PCB

***** To be used with Modified Female Connector Housings Type M.

Coaxial Female Contacts For DIN Daughter Card Connectors

Part-No.	RATING	CLASS	DESCRIPTION	CABLE
053395	50 ohm	1	Straight, double braided	RG316 DB
594207	50 ohm	1	Straight	RG174/U, RG188A/U, RG316/U
053410	75 ohm	1	Straight	RG179B/U, RG187A/U
594209	50 ohm	1	Right Angle	RG174/U, RG188A/U, RG316/U
053412	70 ohm	1	Right Angle	RG179B/U, RG 187A/U
594211	50 ohm	1	Right Angle, 5 leg	PCB
123211	75 ohm	1	Right Angle, 5 leg	PCB

DIN 41612 / IEC 60603-2 Connectors

Special Contacts for Type M Male and Female

High Current Female Contacts For DIN Backplane Connectors

Part-No.	RATING	CLASS	DESCRIPTION	CABLE
594172	10 amp	1	Solder	Awg 16-20
594174	20 amp	1	Solder	Awg 12-16
594176	40 amp	1	Solder	Awg 8-12
594178	10 amp	1	Crimp	Awg 16-20
594180	20 amp	1	Crimp	Awg 12-16
594182	40 amp	1	Crimp	Awg 8-12
913637	40 amp	2	Straight, 1 leg, 5.5 mm diameter	PCB

Pressfit High Current Contacts For DIN Backplane Connectors

Part-No.	RATING	CLASS	Description	Plated PCB Hole Diameter	Drilled PCB Hole Diameter
034190	20 amp	2	Straight, FD	3.0 + .04 / - .06	3.1 + 0 / - .03
044639*	40 amp	2	Straight, Pressfit	3.5 + .04 / - .06	3.6 + 0 / - .03

* To be used with Modified Female Connector Housings Type M.

High Current Male Contacts For DIN Daughter Card Connectors

Part-No.	RATING	CLASS	DESCRIPTION	CABLE
594221	10 amp	1	Solder	Awg 16-20
594223	20 amp	1	Solder	Awg 12-16
594225	40 amp	1	Solder	Awg 8-12
594227	10 amp	1	Crimp	Awg 16-20
594229	20 amp	1	Crimp	Awg 12-16
594231	40 amp	1	Crimp	Awg 8-12
594170	10 amp	1	Right Angle, 1 leg	PCB
594168	40 amp	1	Right Angle, 4 leg, .200” sq. FTPT	PCB
913716	40 amp	2	Right Angle, 4 leg, EMLB	PCB

Additional High Current contacts in Performance Class 2 on request

Tooling

High Current Contacts

Hand tool for crimp contacts	Part-No.	**594184**
Contact Locator	Part-No.	**914004**

Coaxial Contacts

Hand tools for crimp contacts	Part-No.	**594219**
Insert for crimping tools	Part-No.	**594220**

Extraction Tool For Coaxial And High Current Contacts

For replacing special contacts in male or female connectors	Part-No.	**594233**
Replacement inserts for press-out tool	Part-No.	**433222**

Assembly Instructions For Cable Connections

For Angled Coaxial Contact Assembly

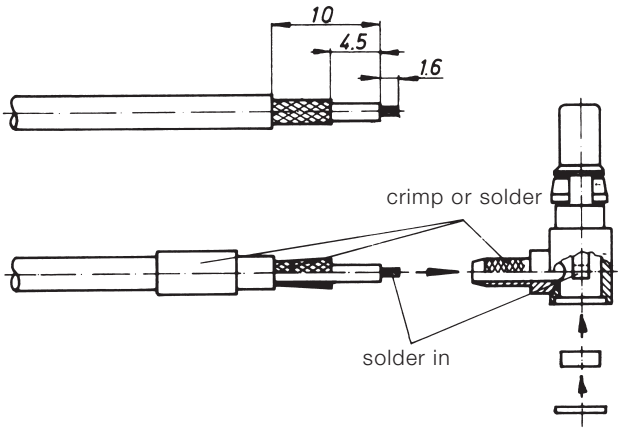

For Straight Coaxial Contact Assembly

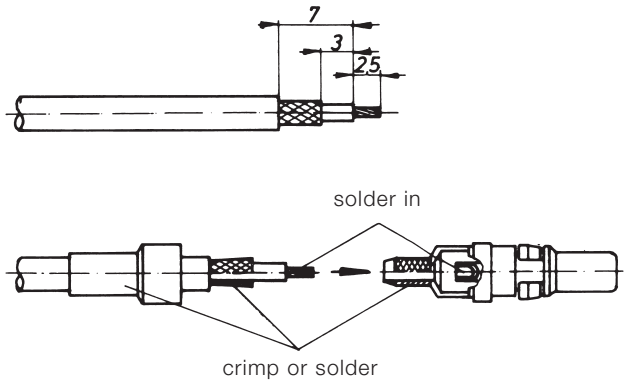

DIN 41612 / IEC 60603-2 Connectors

Type H11

Dimensional Drawing Solder Male

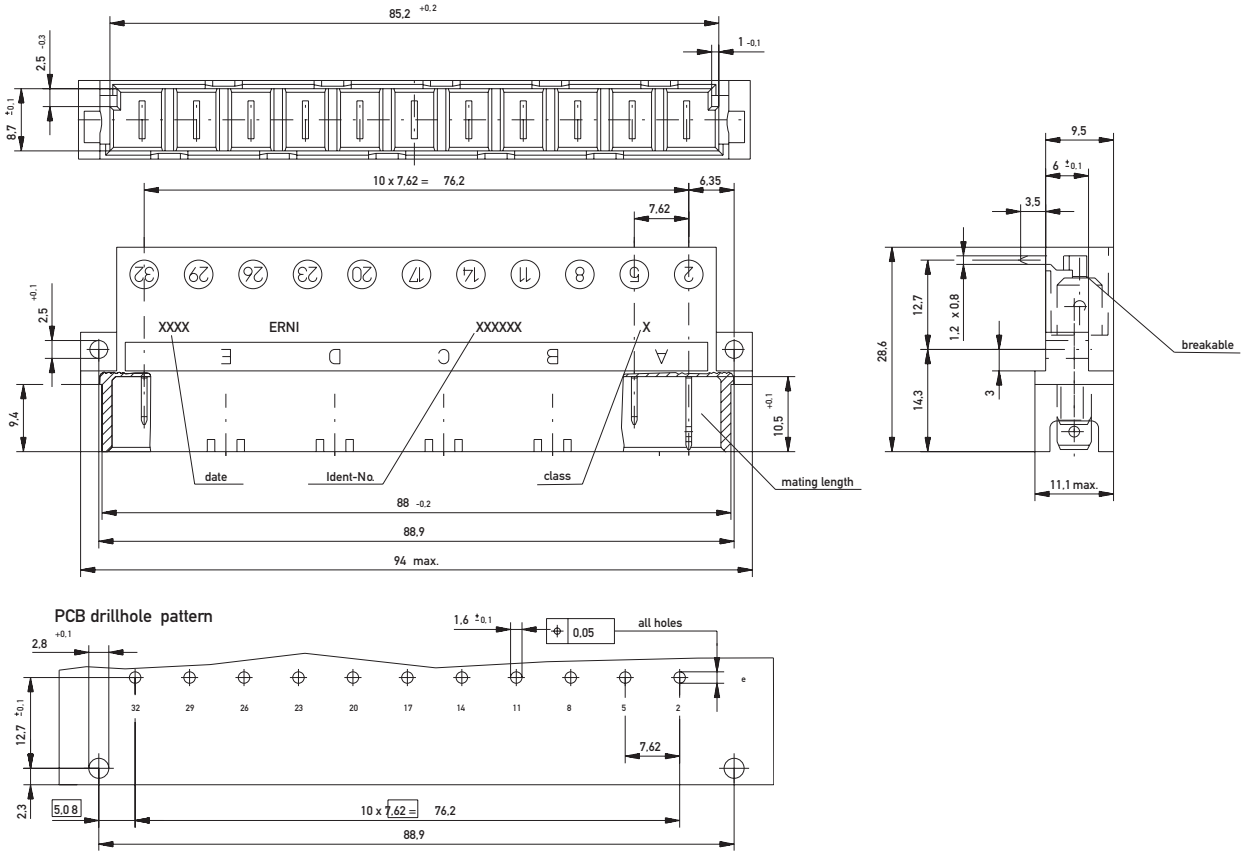

DIN 41612 / IEC 60603-2 Connectors

Type H11

Dimensional Drawing Faston Male

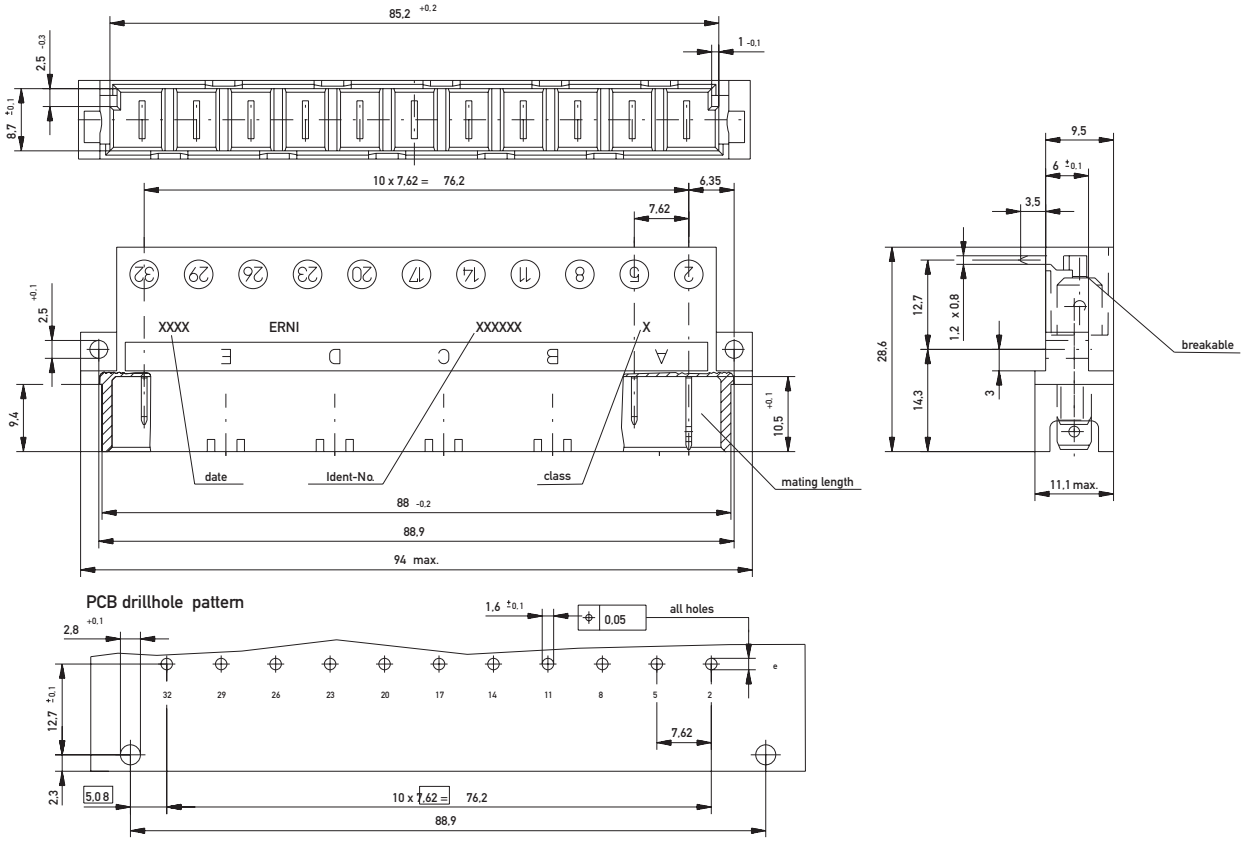

Dimensional Drawing Pressfit Female

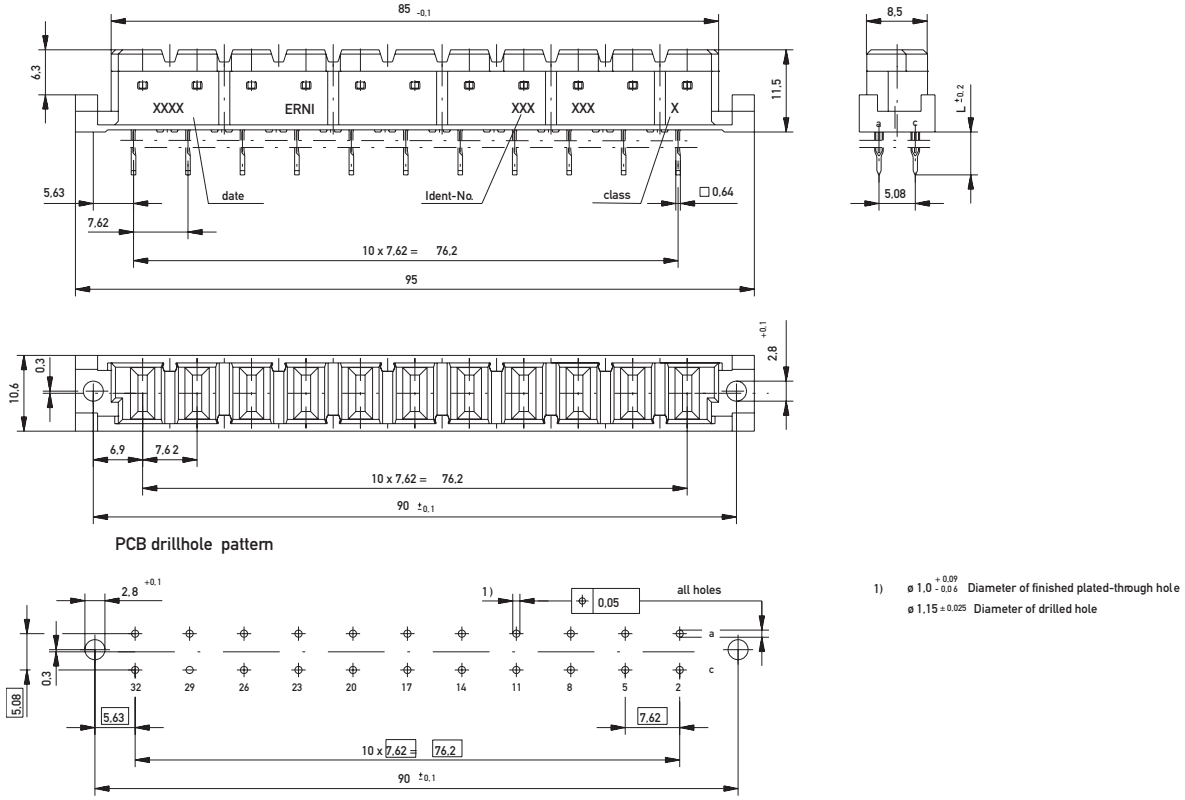

1) ø 1,0 $^{+0,09}_{-0,06}$ Diameter of finished plated-through hole
ø 1,15 ±0,025 Diameter of drilled hole

DIN 41612 / IEC 60603-2 Connectors

Type H11

Dimensional Drawing Solder Female

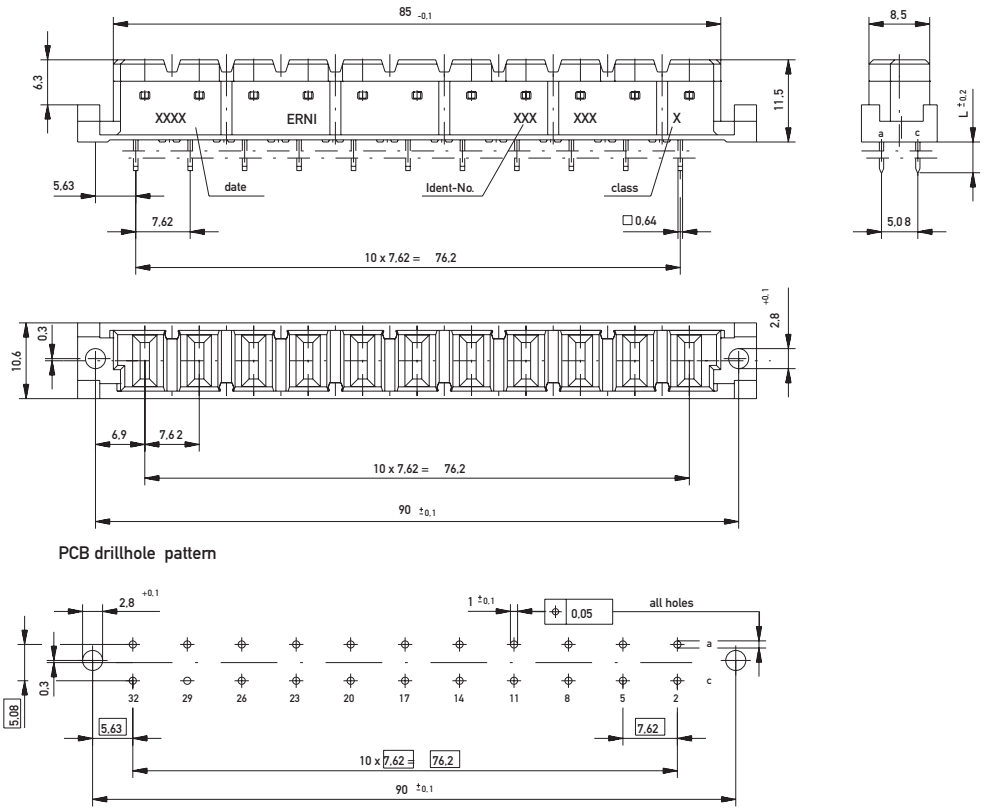

Dimensional Drawing Faston Female

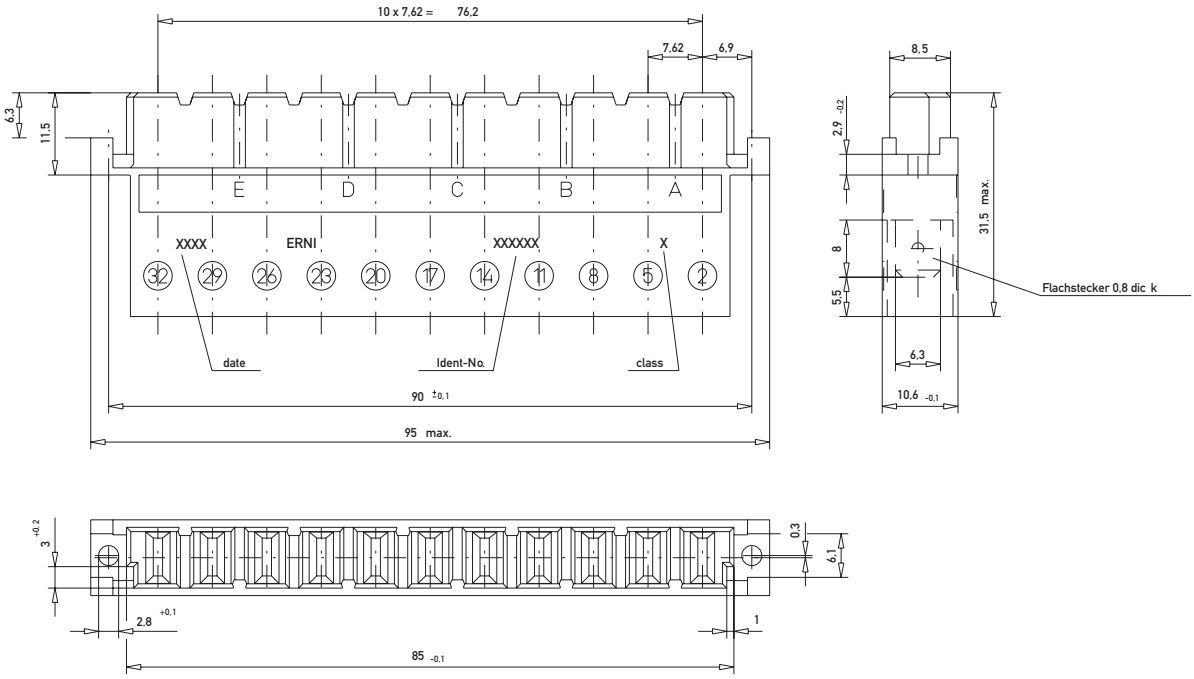

Ordering Information

No. of Pins	Termination	Term. Length	Pin Dimensions	Class	Pressfit Zone	Part Number
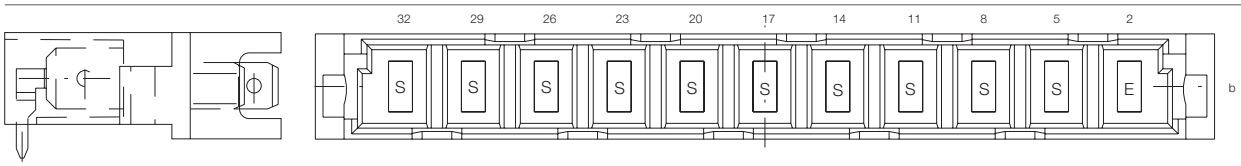						
11	Solder	3.5 mm	1.2 x 0.8 mm	1	–	**233232**
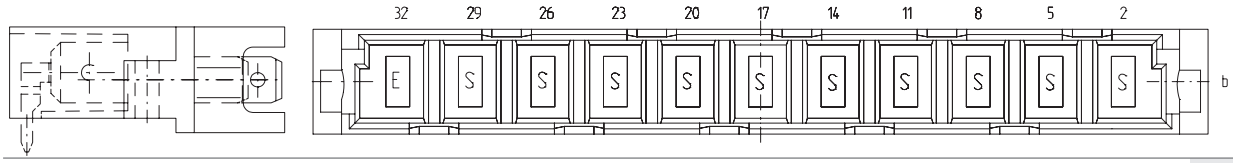						
11	Solder	3.5 mm	1.2 x 0.8 mm	1	–	**233230**
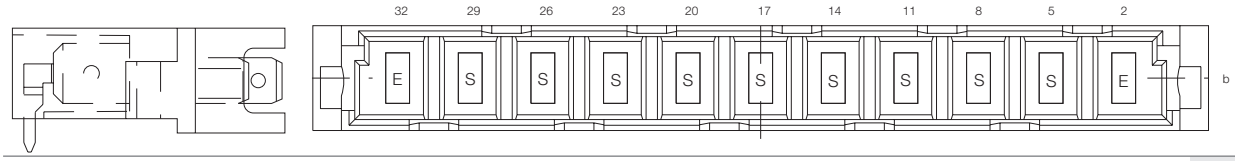						
11	Solder	3.5 mm	1.2 x 0.8 mm	1	–	**233235**
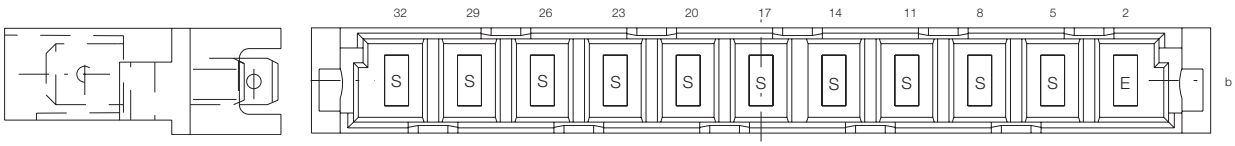						
11	Faston	8 mm	6.3 x 0.8 mm	1	–	**233233**
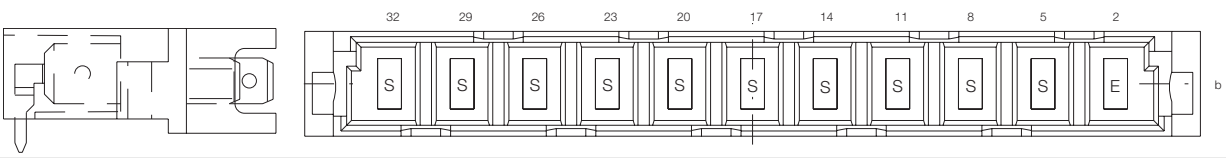						
11	Faston	8 mm	6.3 x 0.8 mm	1	–	**233226**
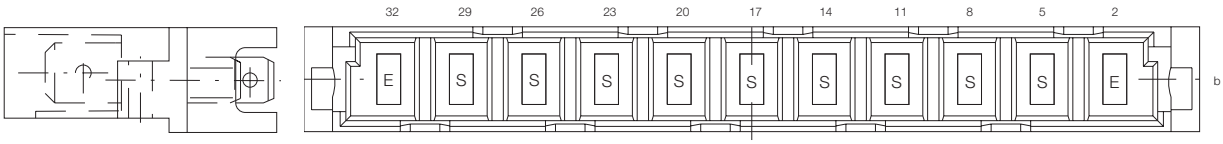						
11	Faston	8 mm	6.3 x 0.8 mm	1	–	**233234**

DIN 41612 / IEC 60603-2 Connectors

Type H11 Female

Ordering Information

No. of Pins	Termination	Term. Length	Pin Dimensions	Class	Pressfit Zone	Part Number
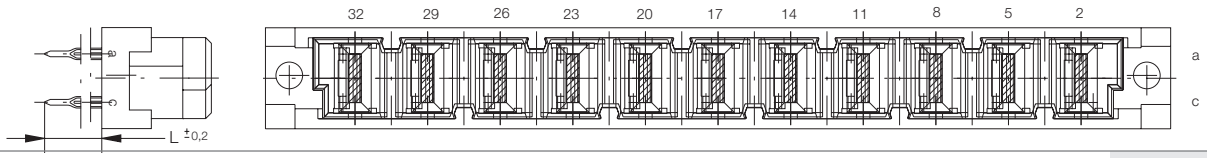						
11	Pressfit	4 mm	0.6 x 0.6 mm	1	2.5 mm	**913738**
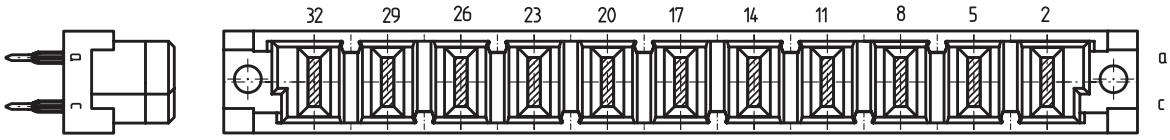						
11	Pressfit	6 mm	0.6 x 0.6 mm	1	2.5 mm	**424655**
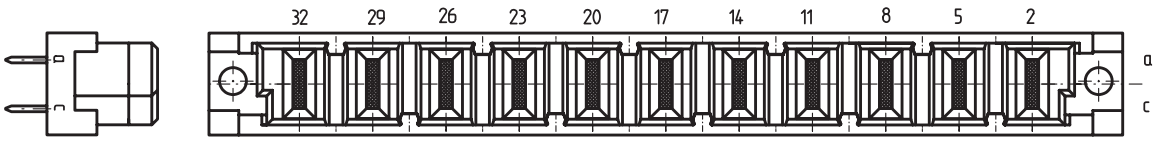						
11	Solder	4.3 mm	0.6 x 0.6 mm	1	–	**424654**
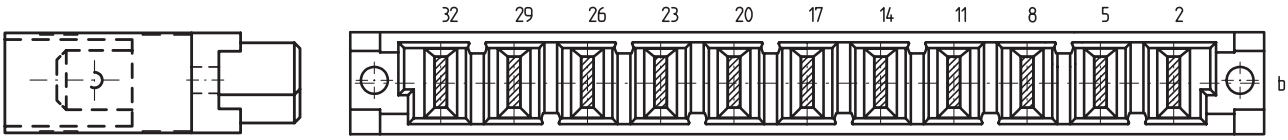						
11	Faston	8 mm	6.3 x 0.8 mm	1	–	**243246**

DIN 41612 / IEC 60603-2 Connectors

Type H15

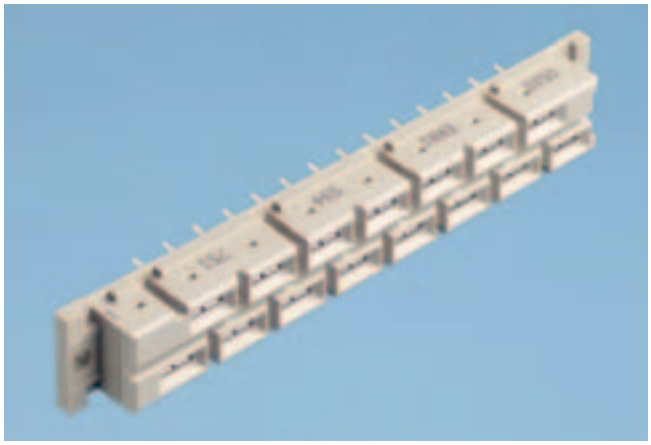

Dimensional Drawing Solder Male

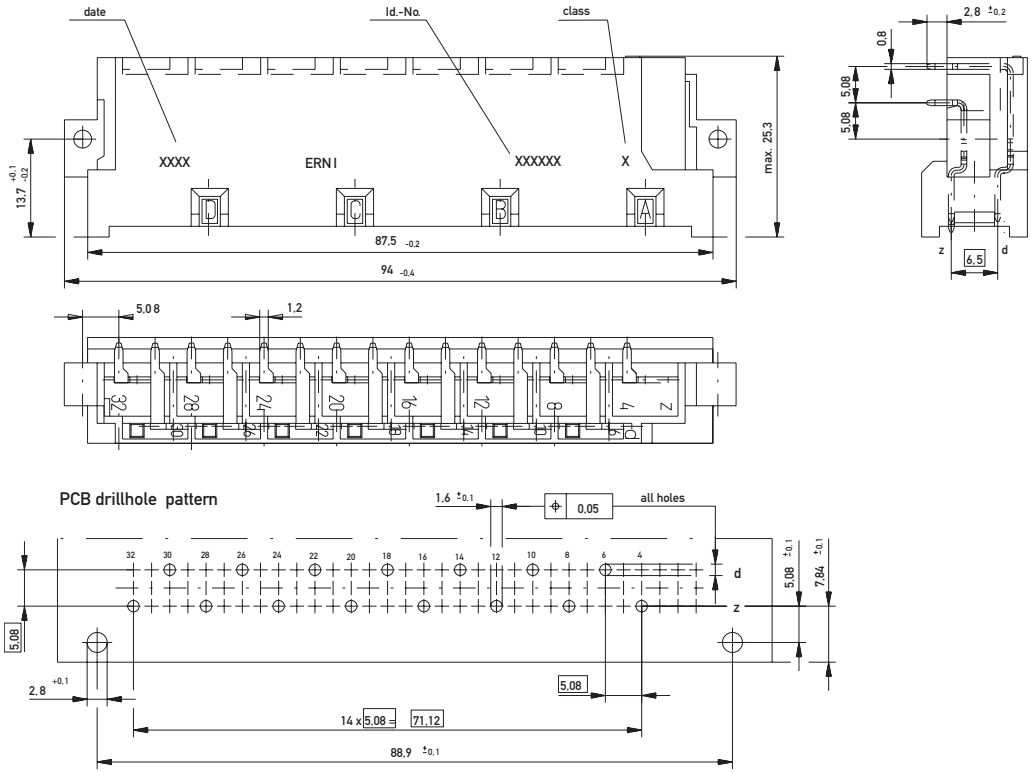

Dimensional Drawing Faston Male

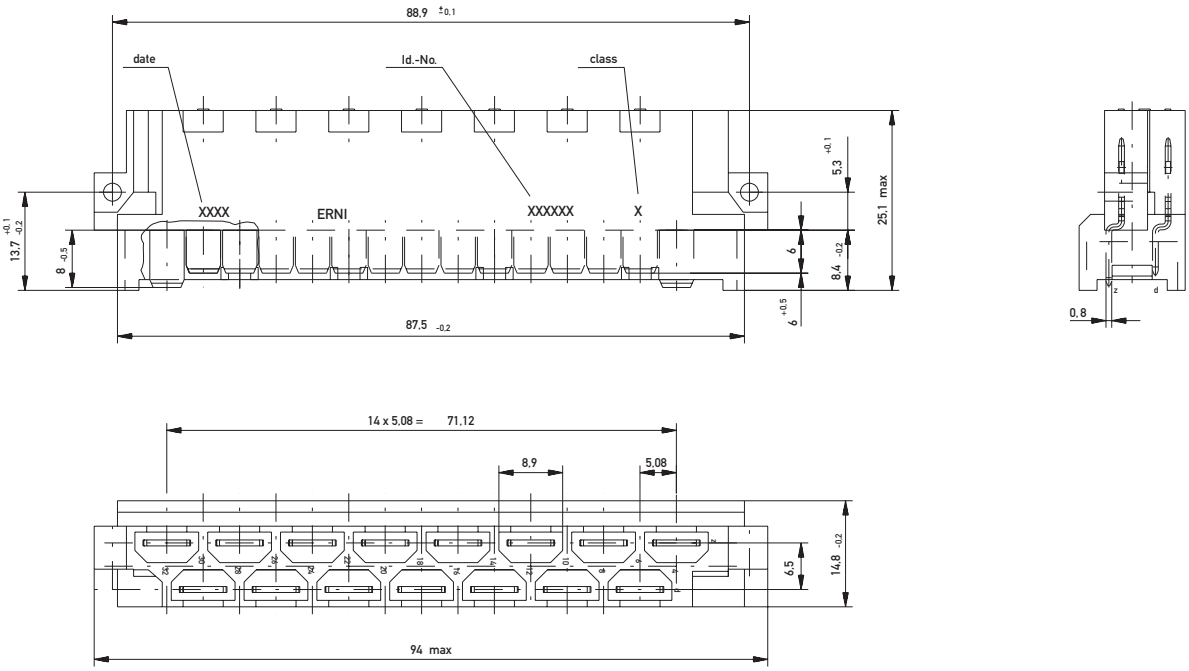

Dimensional Drawing Pressfit Female

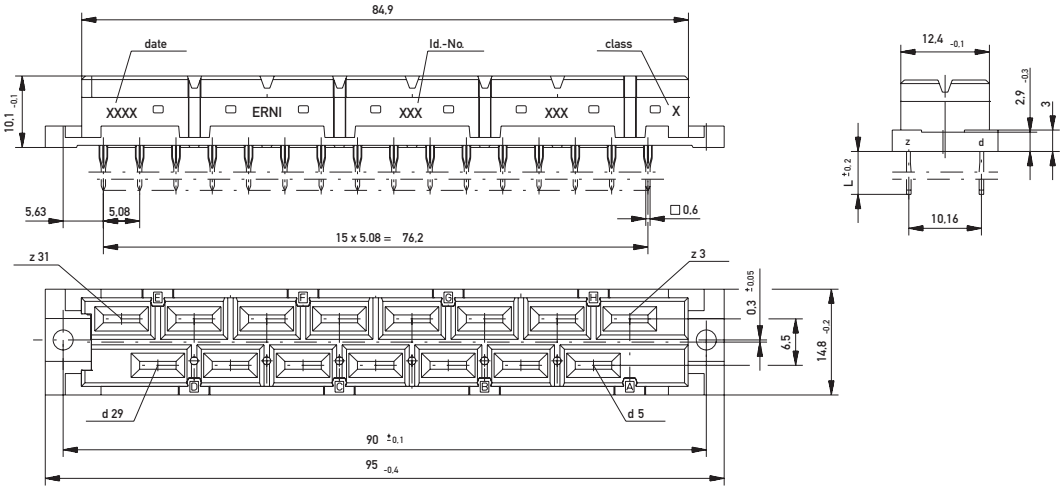

PCB drillhole pattern

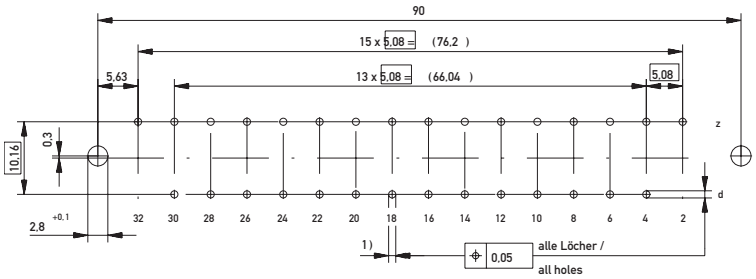

1) ø 1,0 +0,09 -0,06 Diameter of finished plated-through hole
ø 1,15 -0,03 Diameter of drilled hole see drawing 164062

Dimensional Drawing Solder Female

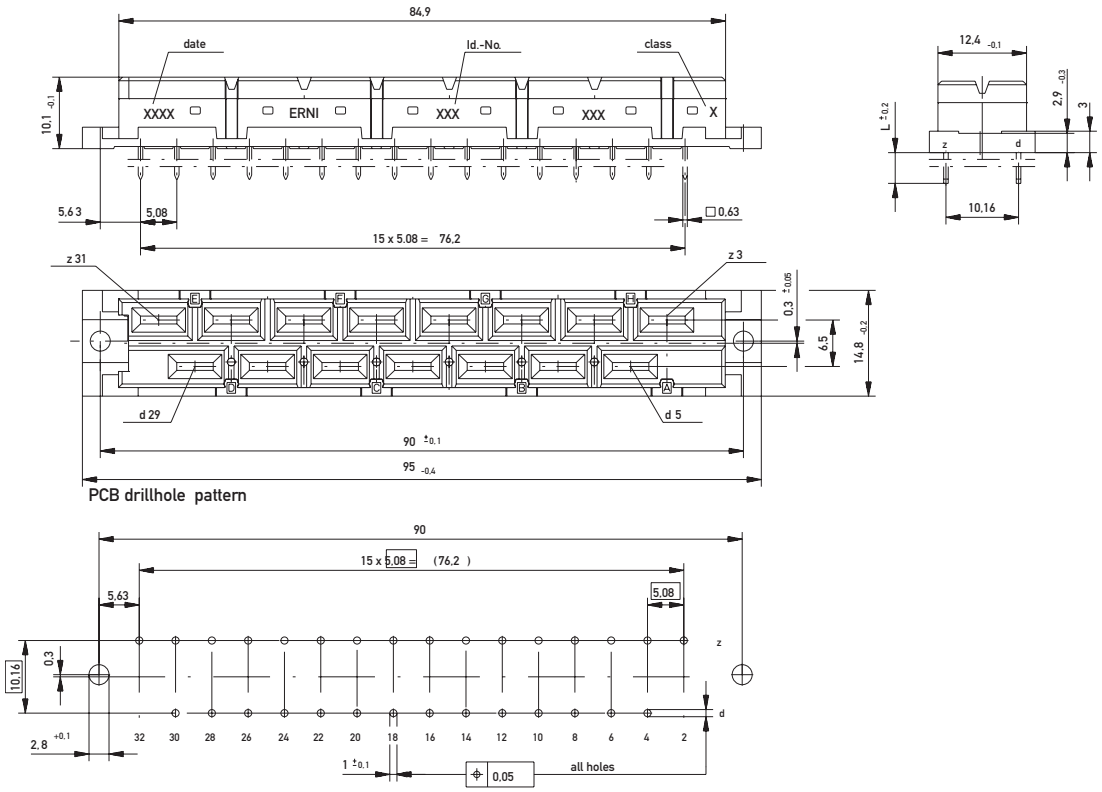

Dimensional Drawing Faston Female

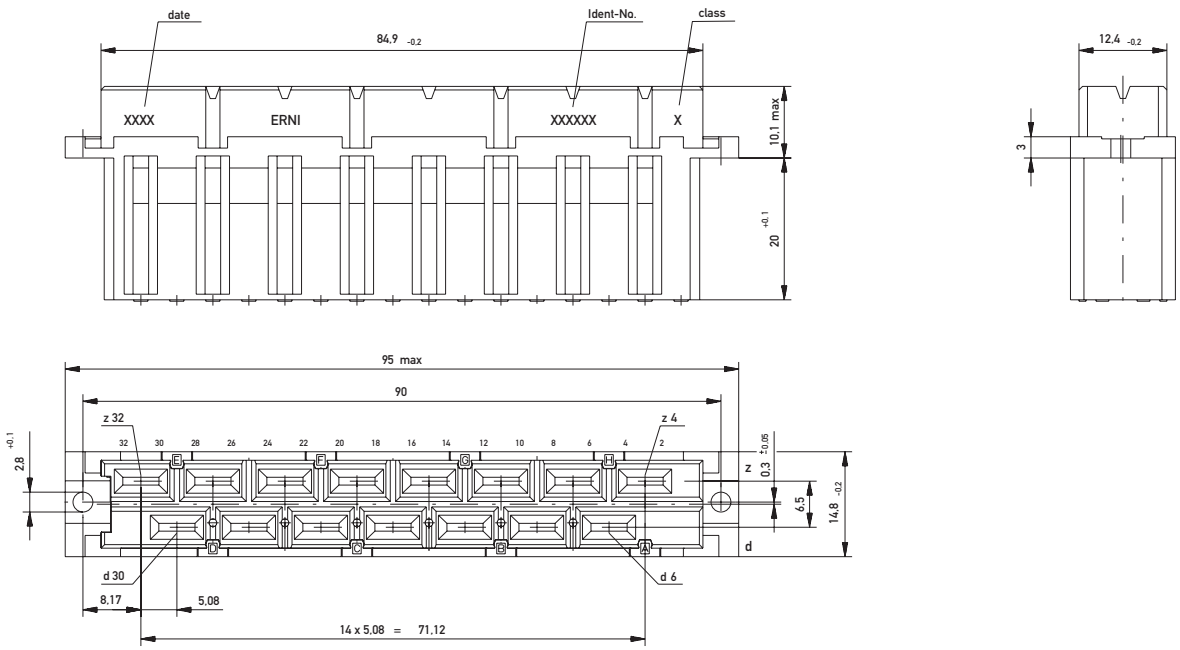

DIN 41612 / IEC 60603-2 Connectors

Type H15 Male

Ordering Information

No. of Pins	Termination	Term. Length	Pin Dimensions	Class	Pressfit Zone	Part Number
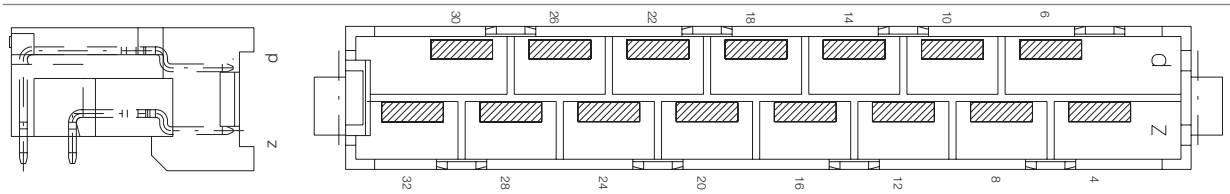						
15	Solder	2.8mm	0.8 x 1.2 mm	1	–	**413638**
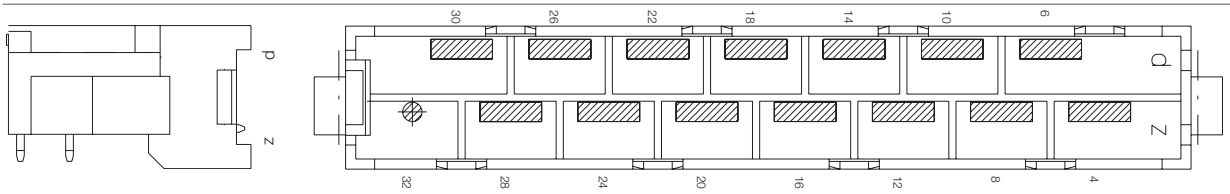						
15	Solder	2.8mm	0.8 x 1.2 mm	1	–	**414575**
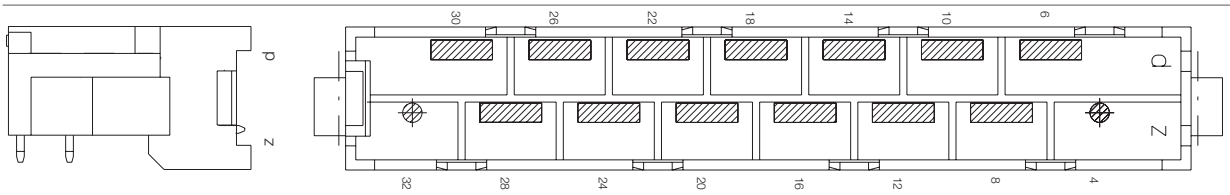						
15	Solder	2.8mm	0.8 x 1.2 mm	1	–	**413169**

Ordering Information

No. of Pins	Termination	Term. Length	Pin Dimensions	Class	Pressfit Zone	Part Number
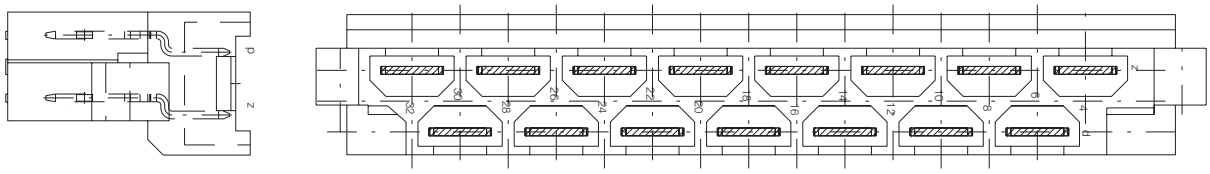						
15	Faston	8 mm	6.3 x 0.8 mm	1	–	**413637**
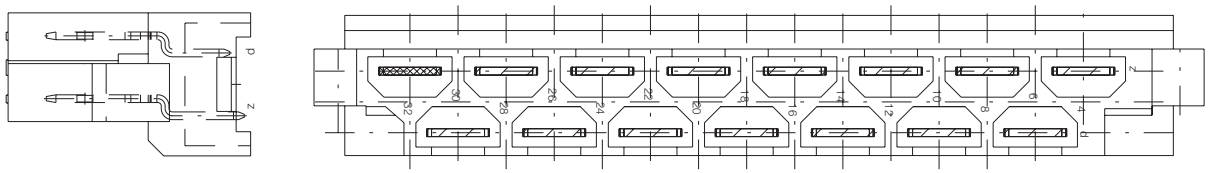						
15	Faston	8 mm	6.3 x 0.8 mm	1	–	**414574**
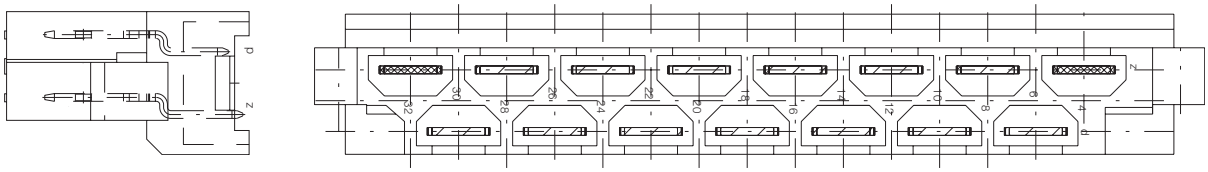						
15	Faston	8 mm	6.3 x 0.8 mm	1	–	**413168**

DIN 41612 / IEC 60603-2 Connectors

Type H15 Female

Ordering Information

No. of Pins	Termination	Term. Length	Pin Dimensions	Class	Pressfit Zone	Part Number
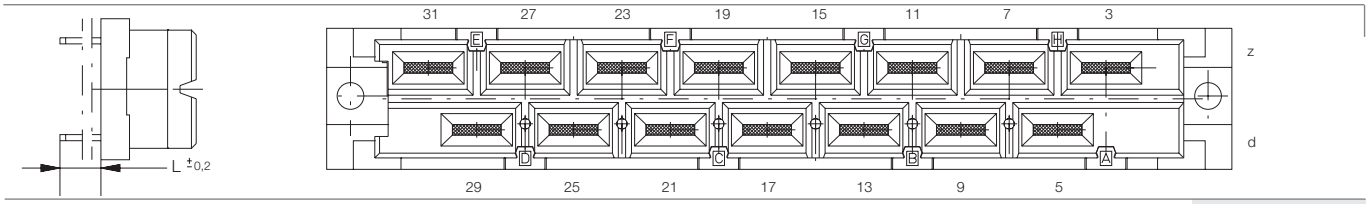						
15	Pressfit	6 mm	0.6 x 0.6 mm	1	2.5 mm	**594752**
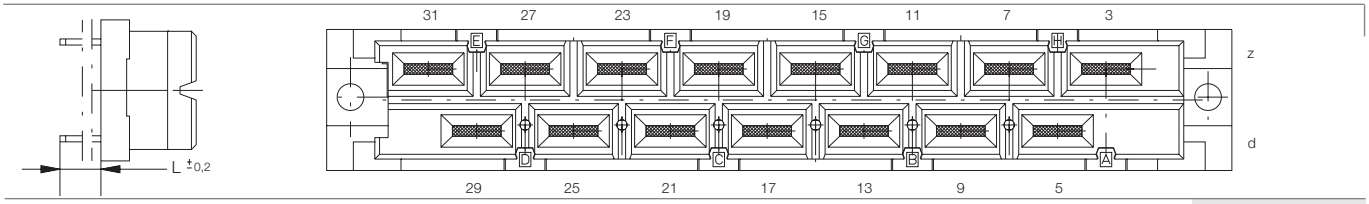						
15	Solder	4.3 mm	1.2 x 0.6 mm	1	–	**594750**
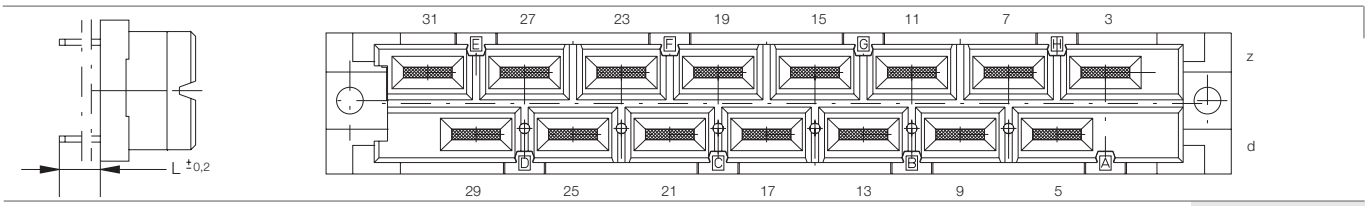						
15	Solder	4.3 mm	0.6 x 0.6 mm	1	–	**594751**
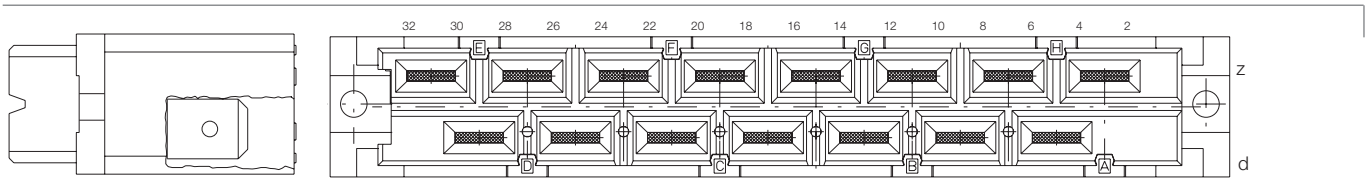						
15	Faston			1	–	**413170**

DIN 41612 / IEC 60603-2 Connectors

Type H7/F24

Size H7/F24 connectors have integral coding using coding pins. The male connectors have drill centering recesses which require the complete hole to be drilled for coding pin loading. The coding pins from the male connectors can then be inserted into the complementary holes predrilled in the female connectors.

The 7 high-current contacts of H7/F24 connectors are hard silver plated and their electrical and mechanical performance conforms to performance level 1. The 24 signal contacts are conform to standard size F. The contacts are gold plated in accordance to their performance levels, the terminals are tin-plated.

Dimensional Drawing Solder Male

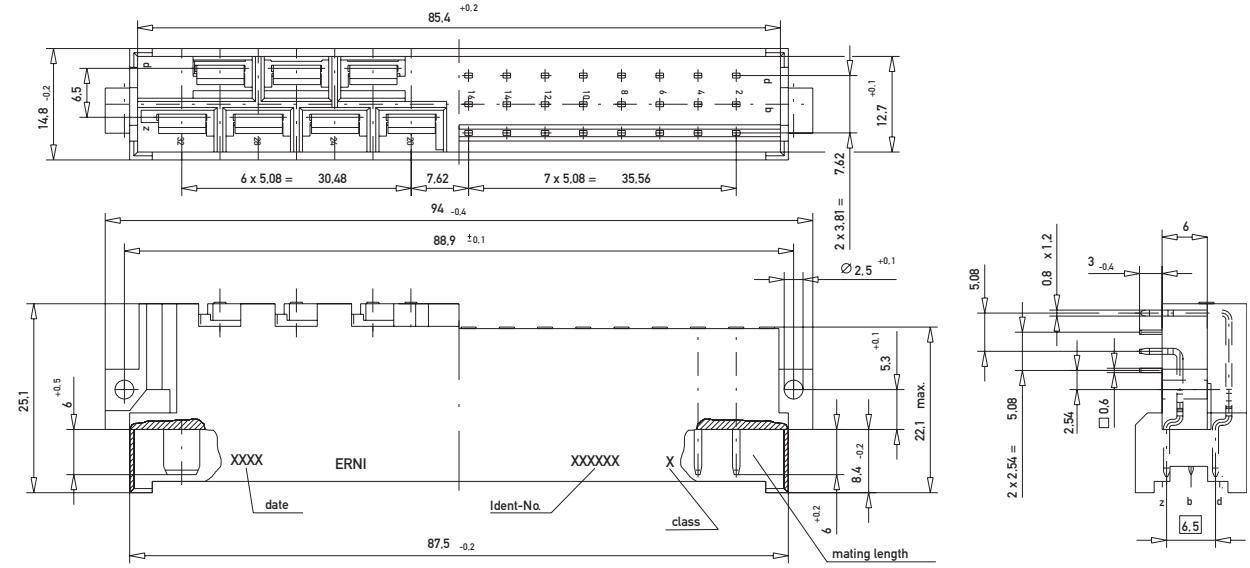

PCB drillhole pattern

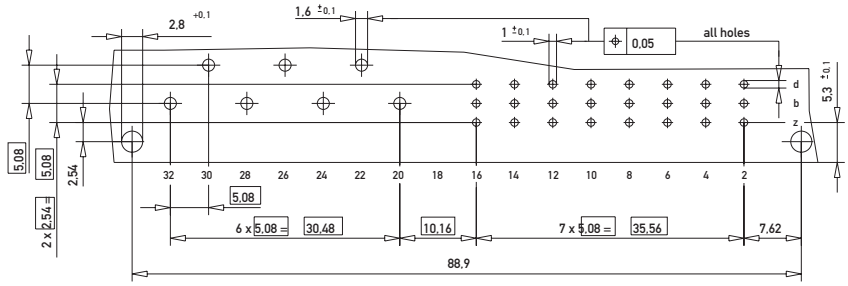

Dimensional Drawing Faston/Solder Male

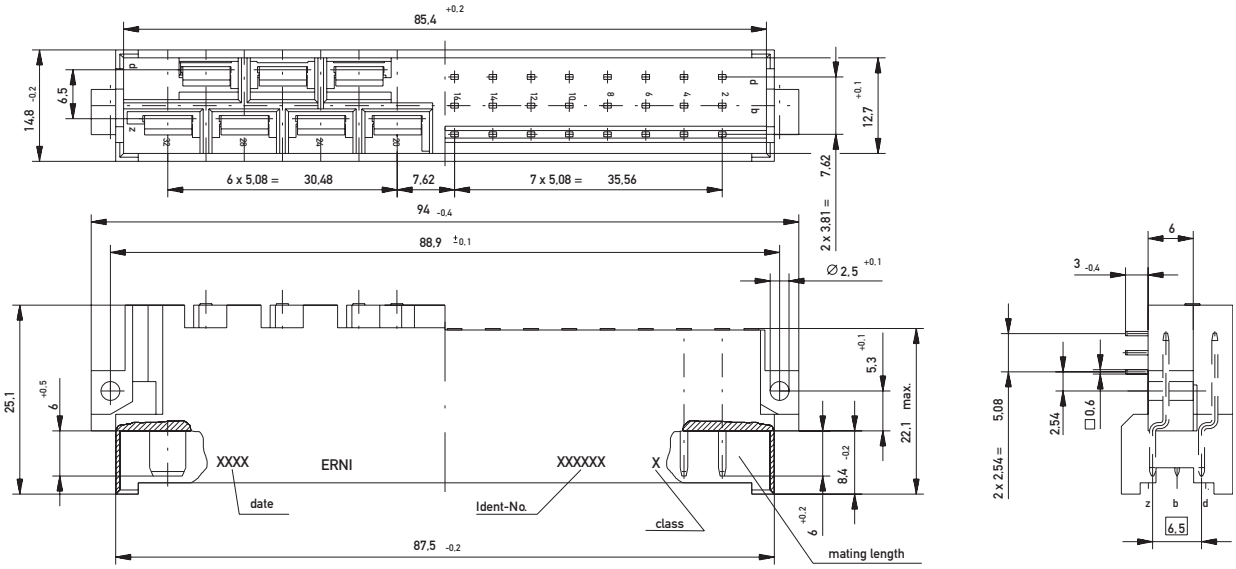

PCB drillhole pattern

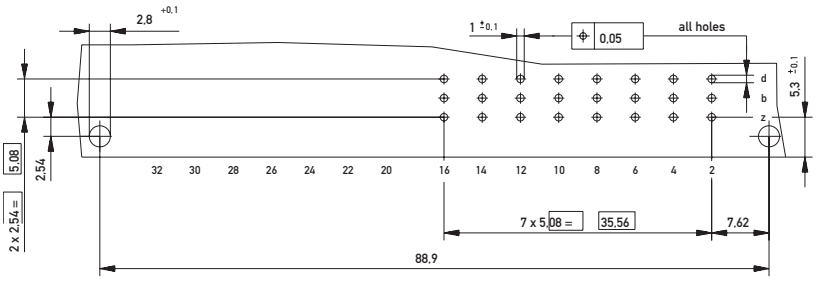

Dimensional Drawing Solder Female

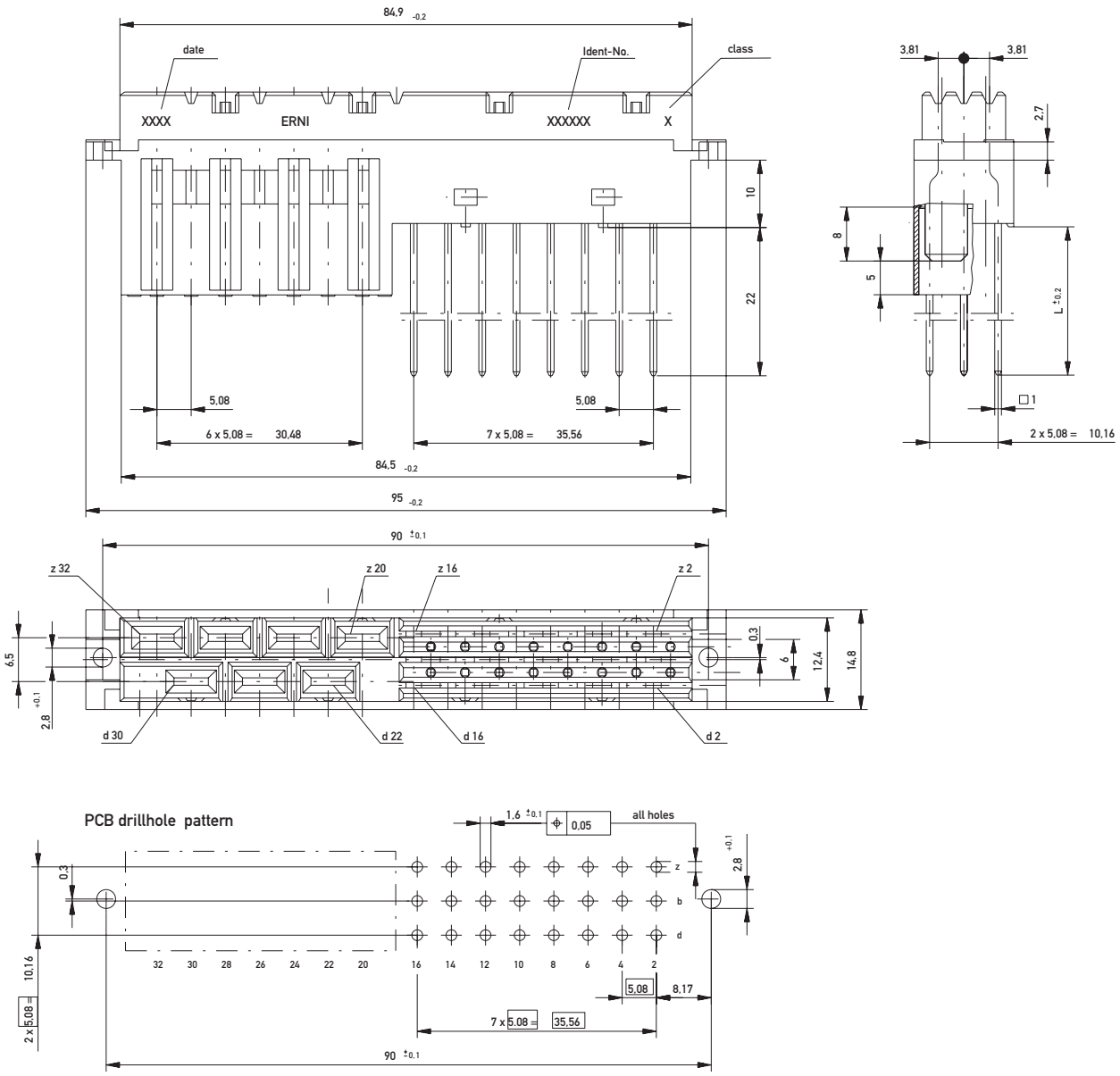

DIN 41612 / IEC 60603-2 Connectors

Type H7/F24 Male

Ordering Information

No. of Pins	Termination	Term. Length	Pin Dimensions	Class	Pressfit Zone	Part Number
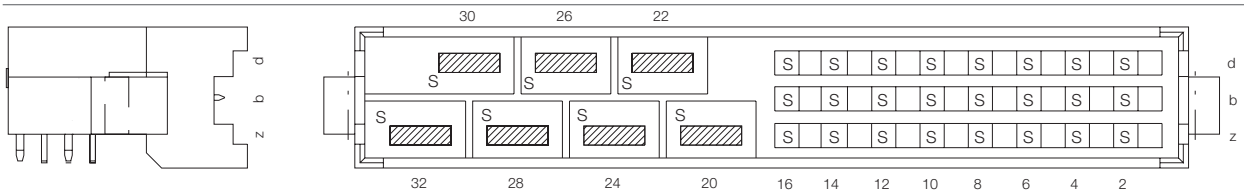						
7-24	Solder	3 mm	H: 0.8 x 1.2 mm; F: 0.6 x 0.6 mm	1	–	**413640**
7-24	Solder	3 mm	H: 0.8 x 1.2 mm; F: 0.6 x 0.6 mm	2	–	**593254**
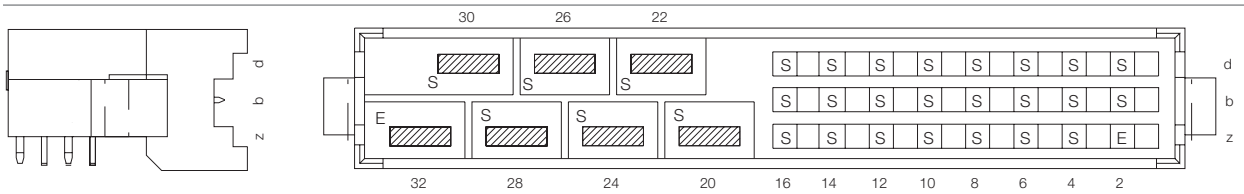						
7-24	Solder	3 mm	H: 0.8 x 1.2 mm; F: 0.6 x 0.6 mm	1	–	**413172**
7-24	Solder	3 mm	H: 0.8 x 1.2 mm; F: 0.6 x 0.6 mm	2	–	**593250**
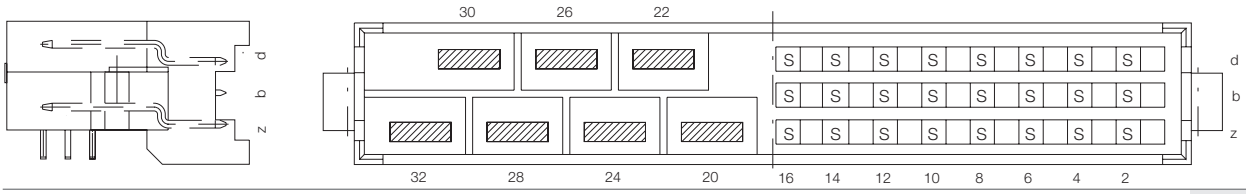						
7-24	Faston/Solder	3 mm	H: 6.3 x 0.8 mm; F: 0.6 x 0.6 mm	2	–	**593252**
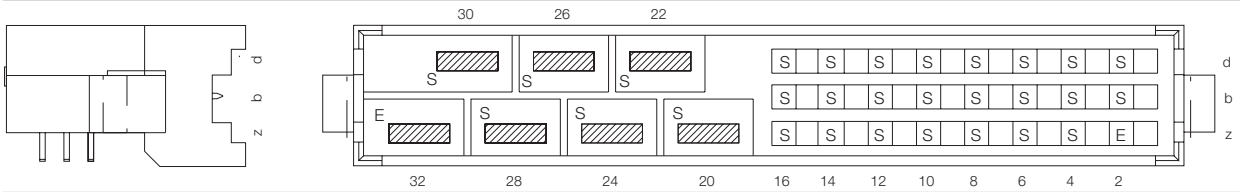						
7-24	Faston/Solder	3 mm	H: 6.3 x 0.8 mm; F: 0.6 x 0.6 mm	1	–	**413171**
7-24	Faston/Solder	3 mm	H: 6.3 x 0.8 mm; F: 0.6 x 0.6 mm	2	–	**593248**

DIN 41612 / IEC 60603-2 Connectors

Type H7/F24 Female

Ordering Information

No. of Pins	Termination	Term. Length	Pin Dimensions	Class	Pressfit Zone	Part Number
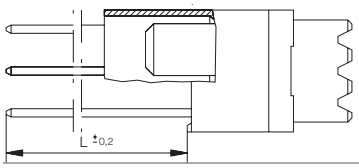			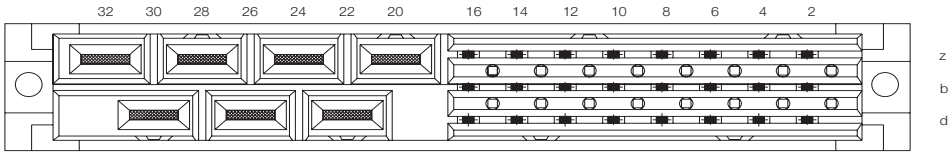			
7-24	Faston/Solder	22 mm	H: 6.3 x 0.8 mm; F: 1 x 1 mm	1	–	**413173**
7-24	Faston/Solder	22 mm	H: 6.3 x 0.8 mm; F: 1 x 1 mm	2	–	**593256**

DIN 41612 / IEC 60603-2 Connectors

Insulation Displacement Connector (IDC)

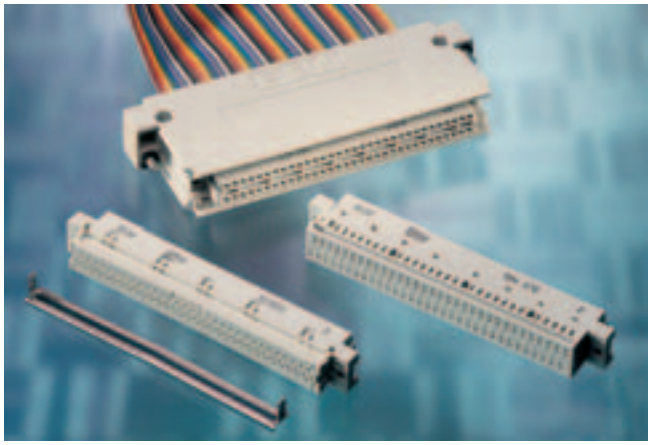

ERNI insulation displacement connectors similar to DIN 41612/IEC 60603-2 are suitable for assembling flat ribbon cables.

The female connectors are available for the standard pin numbers 64 and 96.

- Female connectors size C, 64-pin, rows a c.
- Fenale connectors size C, 96-pin, ows a b c.

The flat ribbon cable fixed to the cable guide is pressed onto the insulation displacement contacts of the female connector using an easy to use tool (pliers or hand lever press).
A reliable connection is made through a double insulation displacement contact. The pointed ends puncture the insulation material of the flat cable and make contact with the conductors at high pressure.

Dimensional Drawing

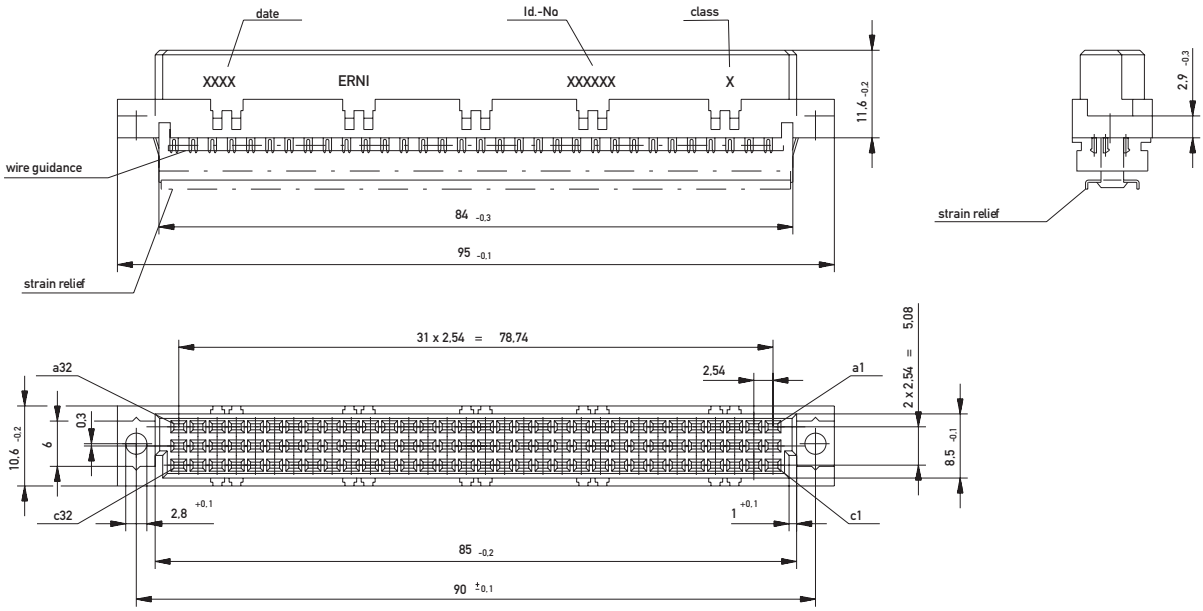

Ordering Information

No. of Pins	Termination	Term. Length	Pin Dimensions	Class	Pressfit Zone	Part Number
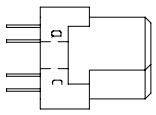 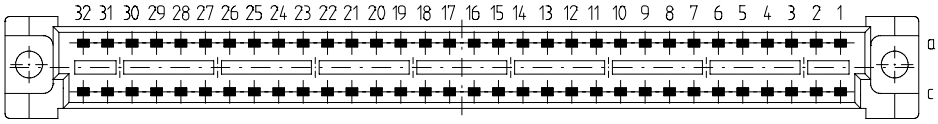						
64	IDC	–	–	2	–	**594470**
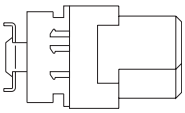 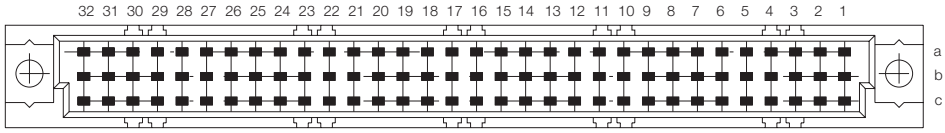						
96	IDC	–	–	1	–	**123905**

Application example for DIN-IDC connectors

For the use of female connectors with insulation displacement contacts as interface connectors from the wiring side of the rack ERNI has developed special shrouds. These Shrouds are available in various heights.

(All dimensions in mm)

Connector Type	Contact length A	PCB thickness B	Shroud height C	Part–No. Shroud
C, R	13	1,6	12,5	**414715**
	13	2,4	12,5	**414715**
	13	3,2	11,4	**434286**
	17	2,4	16,0	**414219**
	17	3,2	15,2	**333139**
	20	3,2	18,2	**413971**

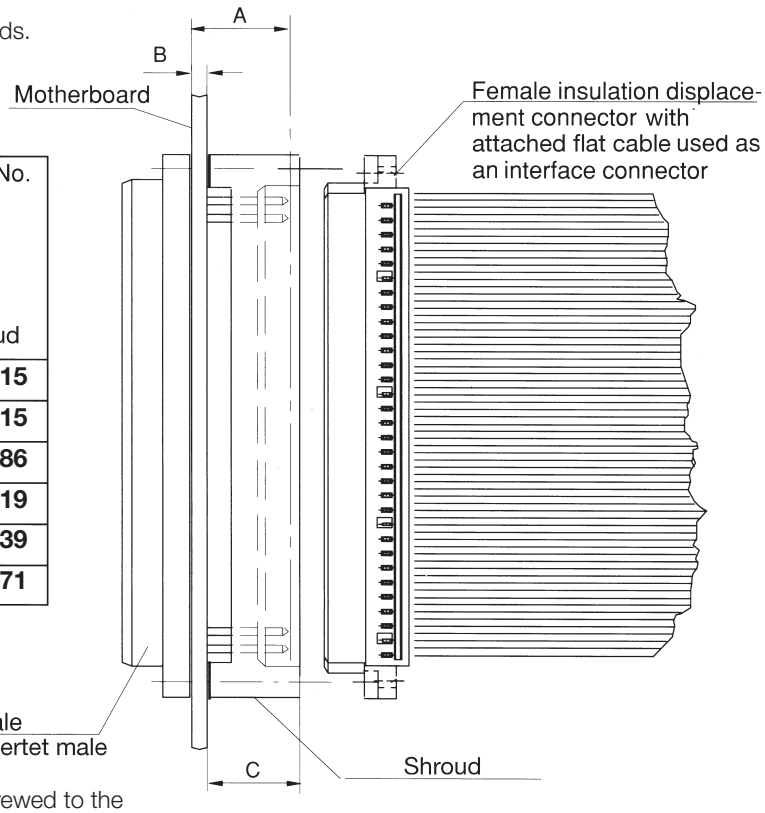

The female insulation displacement connector can be screwed to the shroud with a cheese-head tapping screw B2.2 x 9.5 DIN 7971.

Ordering details tools

Description	Fig. no.	Part no.
Assembly tool with adjustable stop	1	**473188**

Description	Fig. no.	Part no.
Hand lever press	2	**473200**
Pliers with various accessories. Complete set in a case	3	**424623**

Ordering details for flat ribbon cables and accessories

Nummer of pins	Descriptions for flat ribbon cables	Length of a cable reel	Part. no. for 1 meter
64–pin 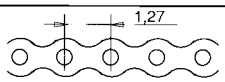	grey with a red identification wire AWG 30	61m	**414068**
	color coded AWG 30	61m	**414082**
96–pin 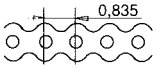	grey with a red identification wire AWG 30	61m	**913049**

Description	Remarks	Part.no.
Tension relief clamp	for a 96–row female connector size C	**033055**

DIN 41612 / IEC 60603-2 Connectors

Crimp snap-in Connectors (CST)

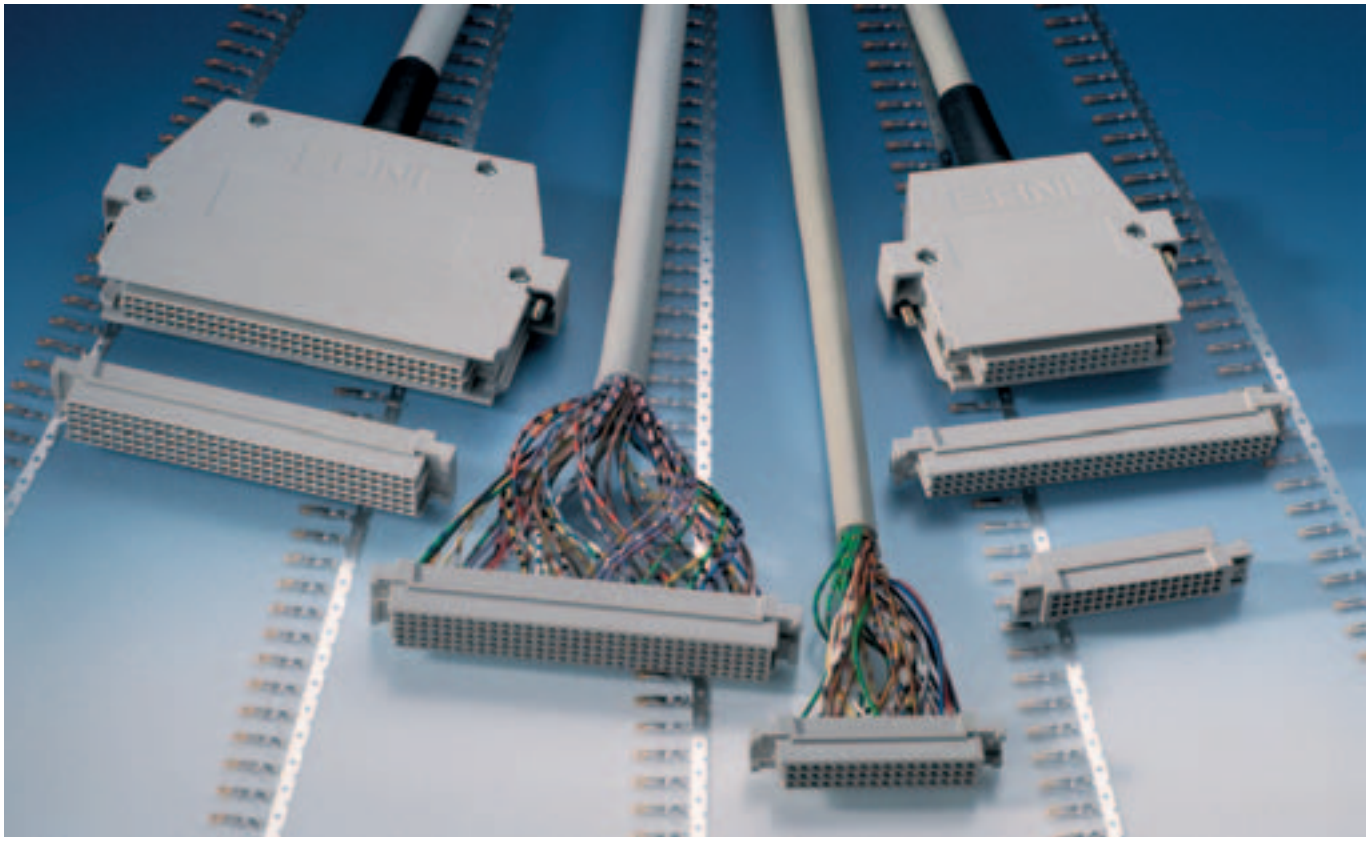

General

Where the termination of interconnecting cables is required, crimp snap-in termination represents an efficient wiring method.

Crimp snap-in contacts are connected to the wires by use of suitable crimping tools. The contacts are supplied either singly or suspended from a strip.

Contacts efficiently assembled in this manner snap into the crimp snap-in mouldings provided, thus forming ready equipped connectors.

Crimp snap-in connectors are particulary suitable for flexible wiring with varying numbers of pins.

Hand tools or automatic crimping machines are available for crimping.

Main features

- Available housing sizes
  - size C with 96 contact cavities, rows abc
  - size C/2 with 48 contact cavities, rows abc
  - size E 160 with 160 contact cavities, rows abcde
  - Special and mixed designs
- Cantilever female contacts for constant contact resistance
- Approved female contact design in the mating zone
- Assembly with standard tools
- Suitable for the ERNI interface connector system (connector housings for DIN connectors on front panel and wiring sides)
- Suitable for wire of AWG 28 – 20
  Wire cross section 0.08 – 0.56 mm^2
- Contacts can be detached from the female connector moulding with a simple extraction tool.

Female connector housing size C, 96 contact cavities

Mating and installation conditions as per DIN 41612/IEC 60603-2

Dimensional drawings

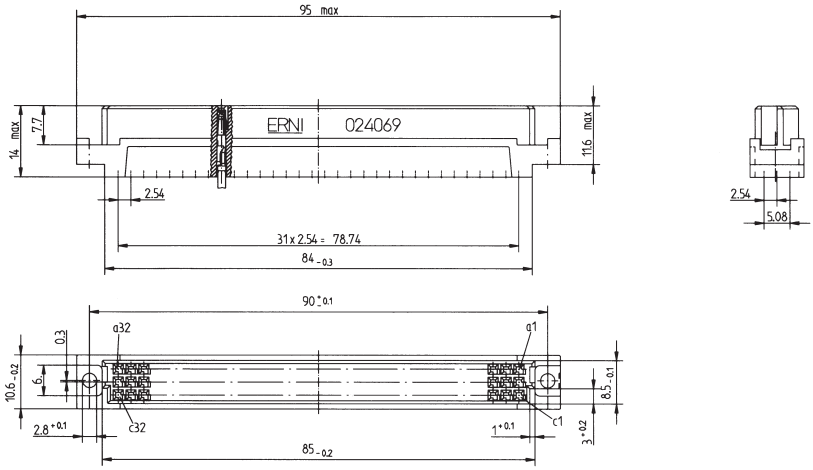

Ordering details

Description	Part no.
Empty housing size C–96	**024069**

Female connector housing size C/2, 48 contact cavities

Dimensional drawings

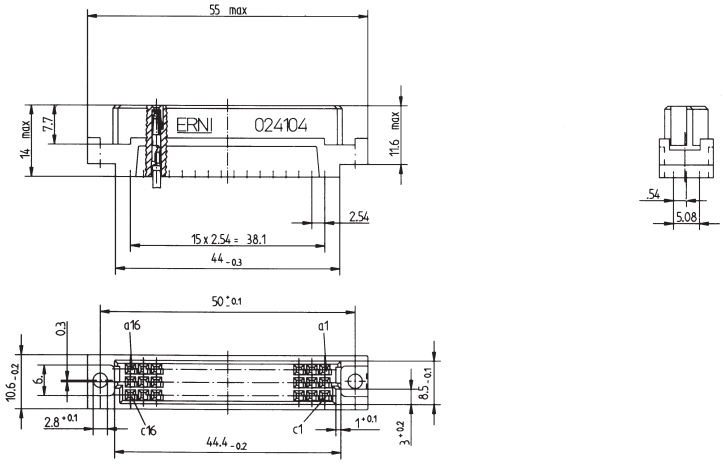

Ordering details

Description	Part no.
Empty housing size C/2–48	**024104**

Female connector housing size E 160, 160 contact cavities

Dimensional drawings

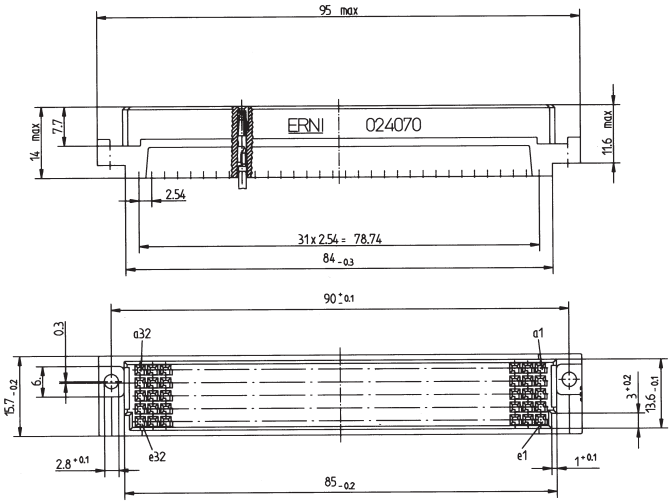

Ordering details

Description	Part no.
Empty housing size E160–160	**024070**

Application example for costumized version

Interesting solutions arise in the application of crimp contacts.

We have developed a 70-pin female connector housing together with a well-known manufacturer of programmable controllers.
We wish to use this example to illustrate that we are constantly developing components in cooperation with our customers.

Perhaps your company also has applications which you may wish to discuss with one of our field sales engineers.

Crimp contacts for female connector housings

Dimensional drawings

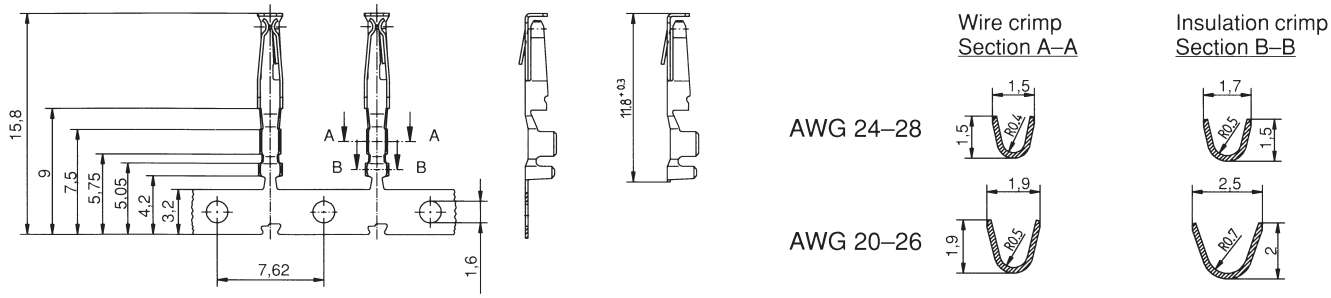

Ordering details

Description	Wire cross section		Perform. level	Part. no. and size		
	AWG	mm²		Contact reel 10.000 contacts	Contact reel 500 contacts	Loose contacts 100 per bag
Crimp contacts	24–28	0,22–0,08	207	**234065**	**234066**	**234067**
	20–26	0,56–0,14	207	**234062**	**234063**	**234064**

Crimp contacts from ERNI are characterized by their precision.

The two opposite spring legs guarantee a constant contact.

Precise positioning of the contacts in the female connector housing is achieved by using of the box-type design in the front zone of the contact.
A spring-loaded barb on the side locks the contacts in the female connector housing.

This locking can be undone easily with a small tool.

Assembly tools for DIN crimp connectors
Technical data and ordering details

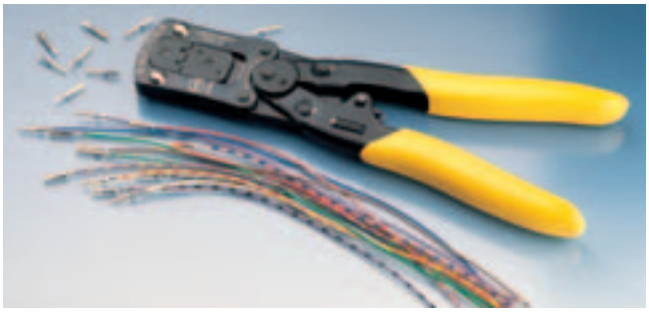

	Part no.
Hand tool for loose contacts AWG 20 – 28 0,56 – 0,08 mm^2	**014374**

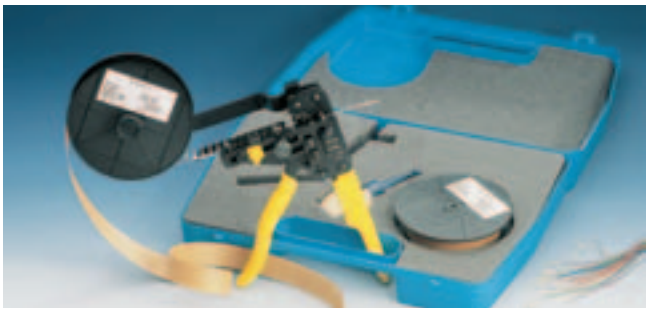

	Part no.
Hand tool for contact reels with 500 contacts including reel holder and adjustable feed	**014375**

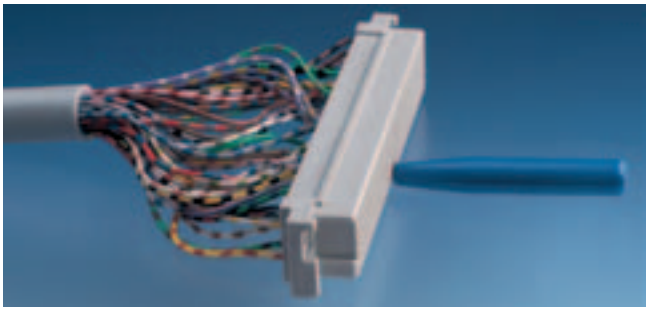

	Part no.
Disassembly tool for all AWG ranges	**471555**

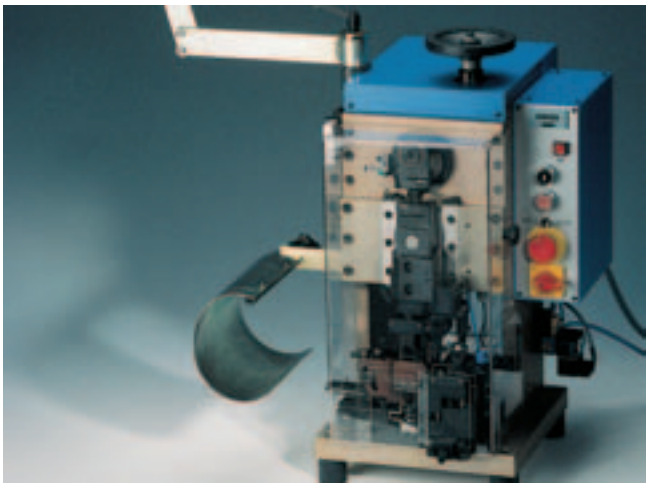

Crimp presses are available for the automated crimping.
Please refer to our ERNI-team when purchasing this press.

The interface connector system from ERNI for the front panel and wiring sides

Front panel
with guide elements

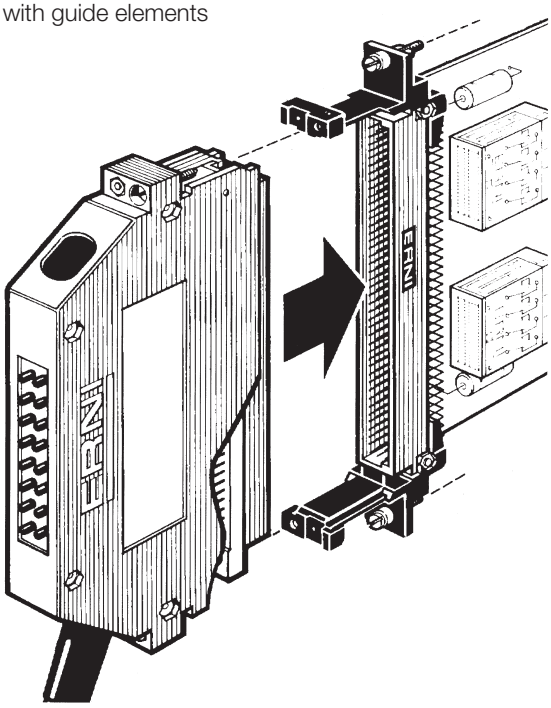

Wiring side
shroud with guide elements

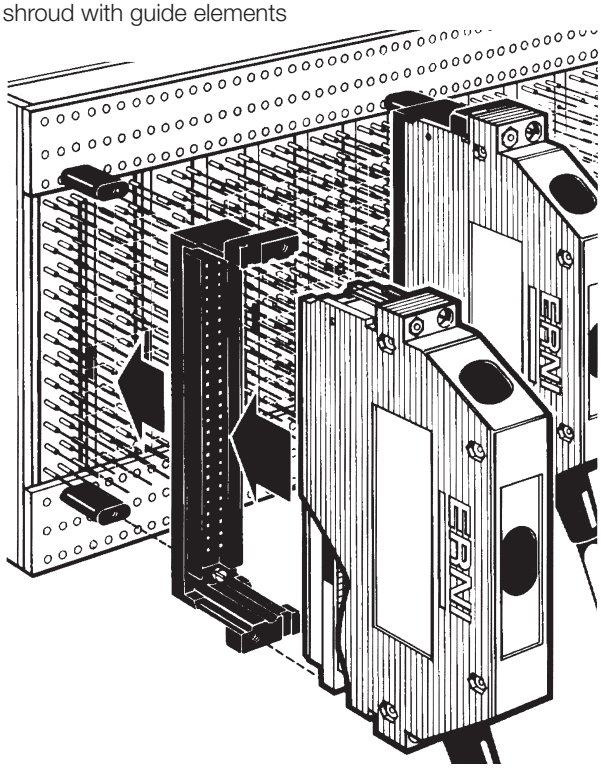

The female connector housings of size C, C/2 and E 160 fit into the cable connector housings of series KSG 173 and KSG 193.
For installation on the front of the rack there are guide elements for mounting in the front panel and guide elements which can be mounted on the rack without a front panel.

Interface connection is possible from the wiring side with guide elements and shroud.

Do ask for our technical documentation or contact one of our offices or field sales engineers.

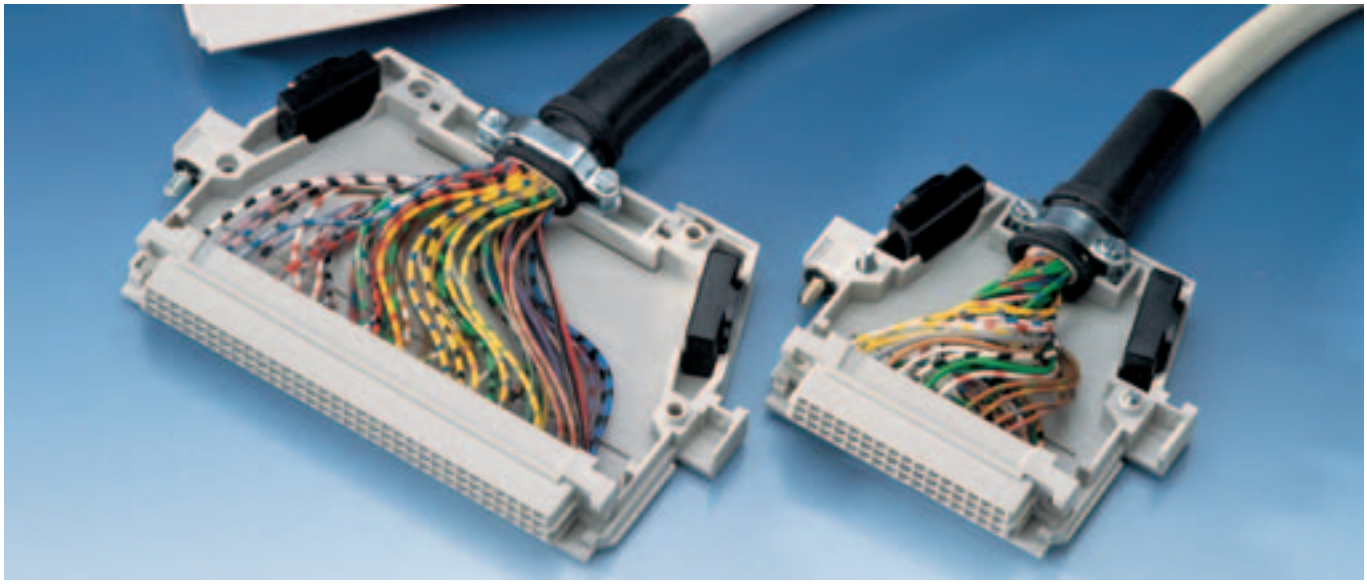

Shroud

for mounting on PC Boards
with connectors size C, R, CD 128, RD 128, E 160, TE 160

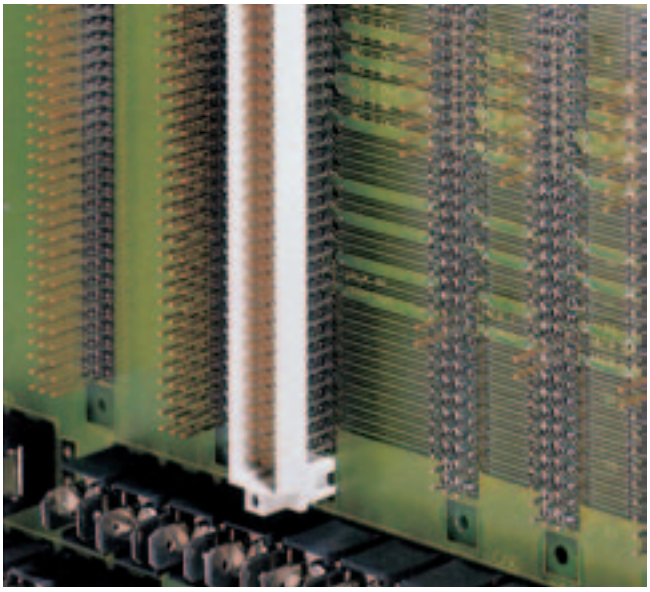

Interface on the wiring side of a control system with the aid of interface connectors play an important role in signal transfer. One of the many advantages of the press-fit technique ist that the interface connection to the wiring side can be made easily. This connection to the wiring side of a PC Board loaded with press-fit connectors can be accomplished by simply mounting shrouds to the rear (wiring) side. ERNI has developed shrouds with varying heights for the C, R, CD 128, RD 128, E 160 and TE 160 sizes.
For more information on the ERNI shrouds, please contact your field sales engineers.

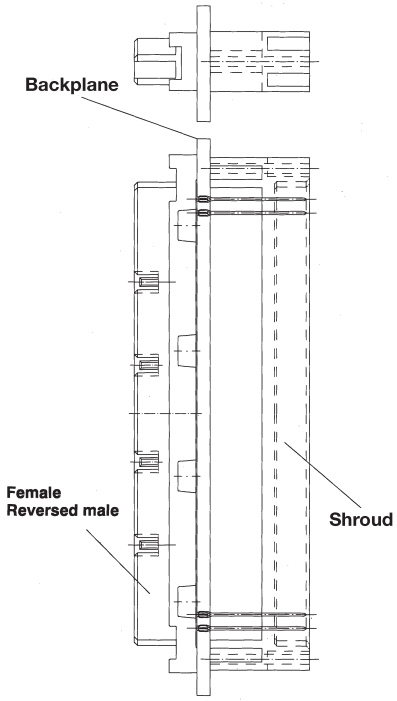

Ordering Information

(All dimensions in mm)

PCB thickness	Mating area	Total height	Contact length	Part–No. Shroud			
LP	C	B	A	E 160 TE 160	CD 128 RD 128	C 96 R 96	C/2–48 R/2–48
2.4	6.0	11.0	13	064729	064728	433215	034798
3.2	5.2						
2.4	5.6	11.4	13	064586	064584	434286	034797
3.2	4.8						
1.6	6.0	11.8	13	064708	064713	013275	034702
2.4	5.2						
3.2	4.4						
1.6	5.3	12.5	13	064585	064583	414715	034799
2.4	4.5						
1.6	4.2	13.6	13	064709	064714	014145	034796
2.4	5.8	15.2	17	064710	064715	333139	034800
3.2	5.0						
1.6	5.8	16.0	17	064711	064716	414219	034801
2.4	5.0						
3.2	4.2						
2.4	5.8	18.2	20	064712	064717	413971	034802
3.2	5.0						

Please consider sufficient overlapping length.

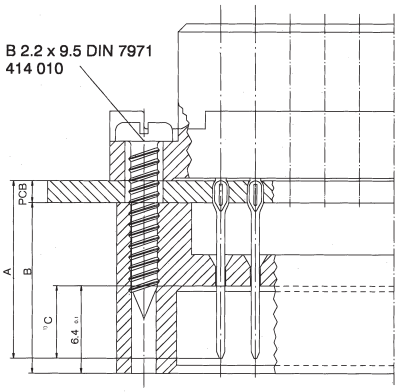

1) The mating dimension "C" is acc. to Norm $4.8^{+0.2}$ should be min. 4.0 and max. 6.0.

DIN 41612 / IEC 60603-2 Connectors

Coding Systems

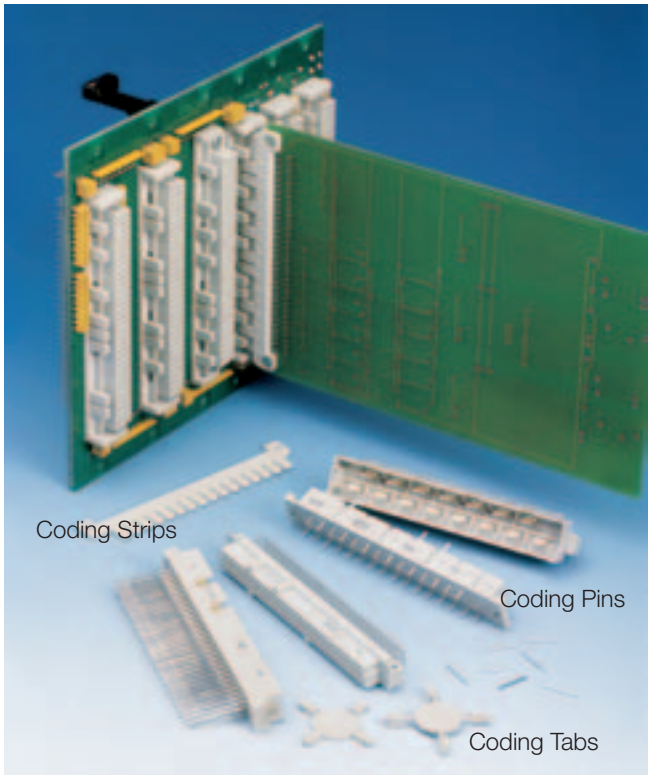

General

In order to ensure proper coding of a DIN 41612 connector and thus protect the valuable components within an electronic device, ERNI offers a variety of coding systems.

• Coding with Coding **Strips**
Separate coding strips are attached directly to each connector half with no additional modular space required in the 19" rack system.

• Integrated Coding with Coding **Tabs**
The coding tabs are plugged into side slots on the female connector while corresponding notch areas on the male connector are removed with coding pliers.

• Integrated Coding with Coding **Pins**
The coding pins are inserted into the predrilled holes on the female connector and drill holes are required on the recess hole points on the male connector at the corresponding locations.

Determining the number of coding possibilities

To maintain connector integrity, the maximum recommended number of coding possibilities is based on using only 1/2 the total available coding slots. For example, in the case of using the coding strips where there are 16 available coding tabs per strip, no more than 8 of the tabs should be removed.
Under this system, the following table Shows the number of coding possibilities for each of the three coding systems.

Connector Style	Coding Strips			Coding Tabs	Coding Pins
	Female and Inverse Male Connectors [1]			Female Connectors	Female Connectors
	F	FL	UE		
B/3, C/3, Q/3, R/3	–	–	–	6	–
B/2, C/2, Q/2, R/2	–	–	–	20	–
B	12870	12870	12870	70	–
C	12870	12870	12870	70	–
D	12870	12870	12870	20	12870
E	12870	12870	12870	–	>12870
F	–	–	–	–	>12870
H11	12870	12870	–	252	–
H15	–	–	–	70	20
H7/F24	–	–	–	–	70
M	12870	12870	12870	70	–
P	–	–	–	70	–
Q, R	12870	12870	12870	70	–
CD128, RD128, E160, TE160	12870	12870	12870	70	–

[1] Male connectors and inverse female connectors require coding bar "M"

Coding Strips
Coding Strip style F

Female connectors B, C, D, E, H11, M, CD128, E160
Inverse Male connectors Q, R, RD128, TE160

For use with female connectors or inverse male connectors as per DIN 41612 in a 19" rack mounting scheme.

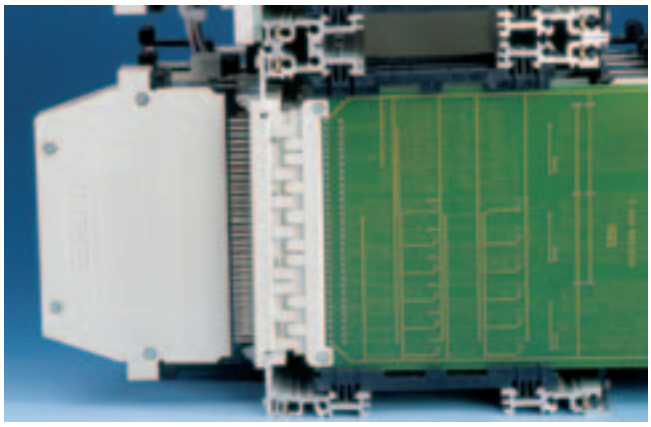

Coding Strip F mounted in a 19" sub-rack.

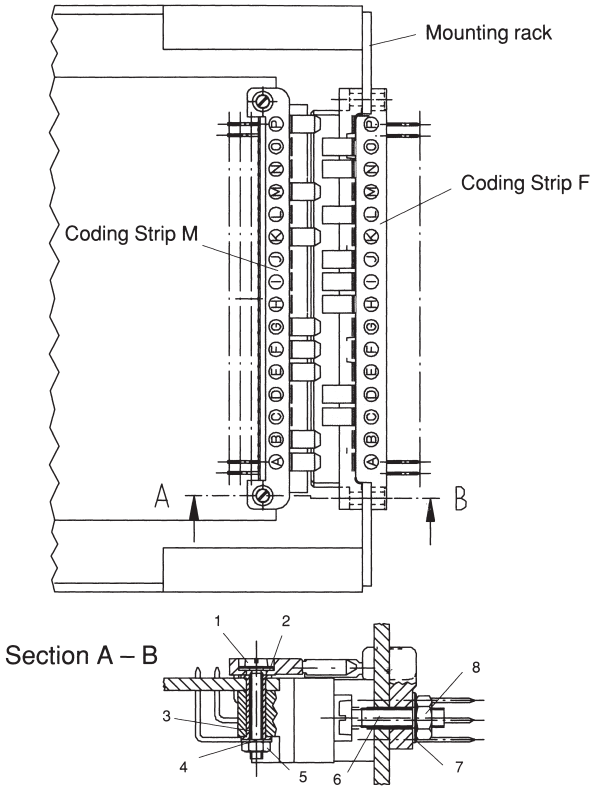

See table on page 197 for reference.

Coding Strip style FL

Female connectors B, C, D, E, H11, M, CD128, E160
Inverse Male connectors Q, R, RD128, TE160

For use with female connectors or inverse male connectors as per DIN 41612 in a backplane mounting scheme.

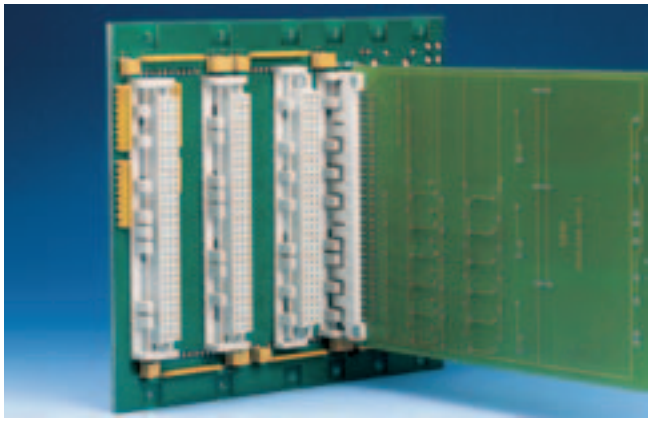

Coding Strip FL mounted on a backplane.

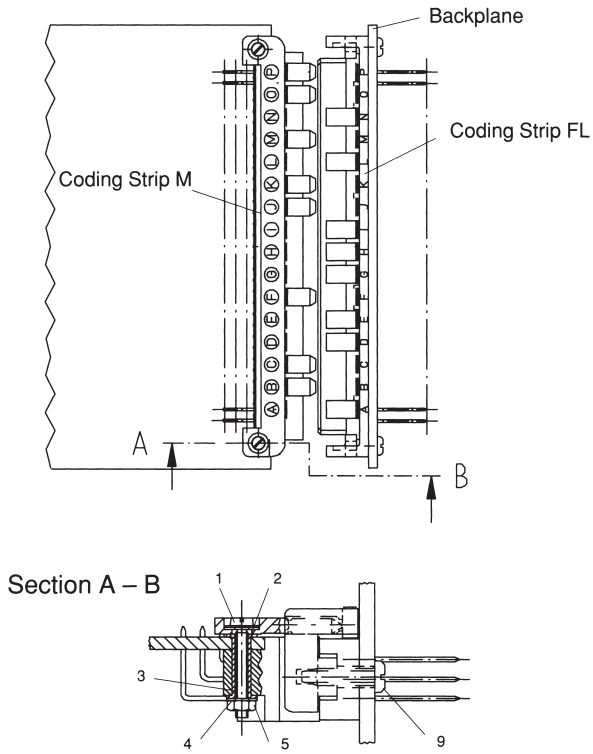

See table on page 197 for reference.

Coding Strip style UE

Female connectors B, C, D, E, M, CD128, E160
Inverse Male connectors Q, R, RD128, TE160

For use with female connectors or inverse male connectors as per DIN 41612 in a backplane mounting scheme together with peripheral connections.

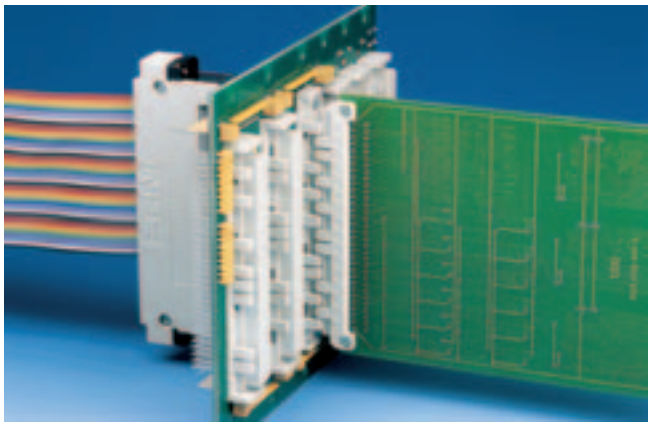

Coding Strip UE mounted on a backplane with a peripheral interface.

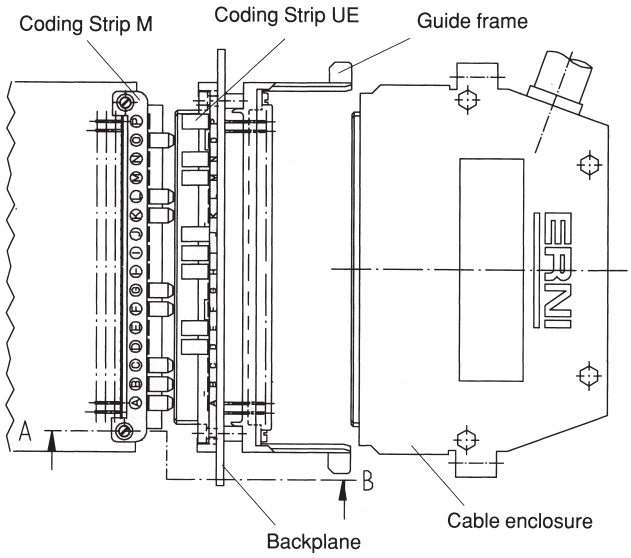

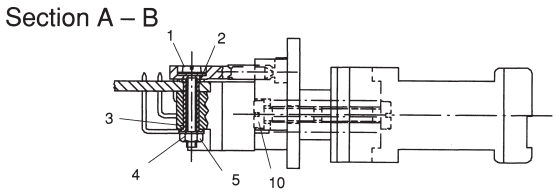

See table on page 197 for reference.

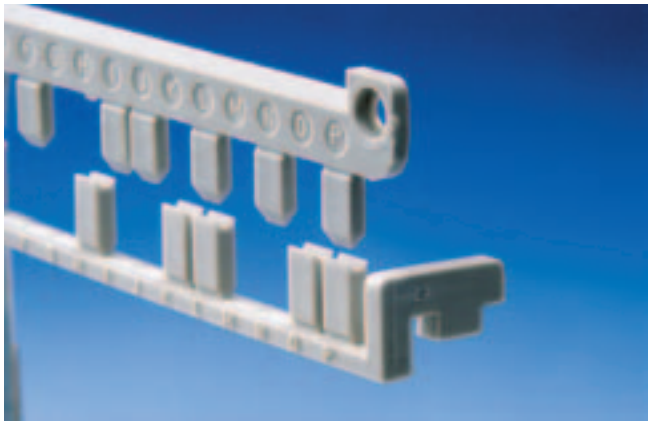

Ruggedized coding tabs on the coding strips can withstand a strain of up to 250 N even when misaligned mating occurs.

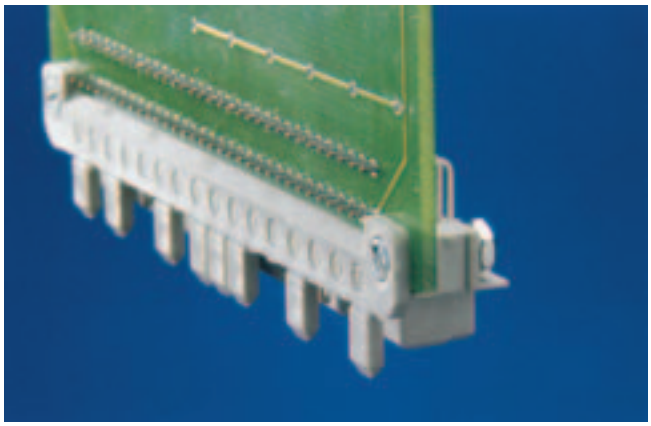

When coding the plug-in module, the coding strip M is always used. The M strips' coding tabs are identified with the letters A, B, C, . . . , P.

Ordering Instructions for Coding Strips

Description	Material	Remarks	Part Number
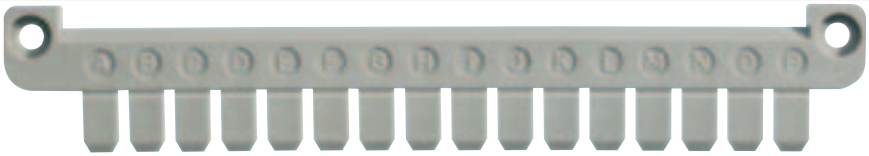			
Coding Strips M Male connectors B, C, D, E, H11, M, CD128, E160 Inverse Female connectors Q, R, RD128, TE160	PBTP 30% GF	Coding Strips M should be mounted after soldering.	**083502**
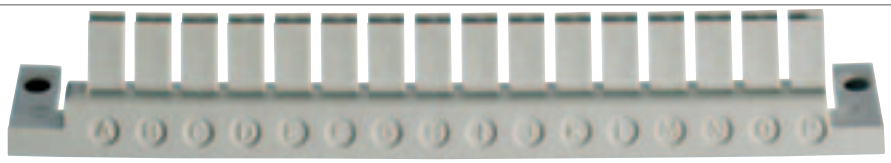			
Coding Strips F Female connectors B, C, D, E, H11, M, CD128, E160 Inverse Male connectors Q, R, RD128, TE160	PBTP 30% GF	The Coding Strips must be screwed or riveted together with the connector; no additional drill holes are needed.	**083504**
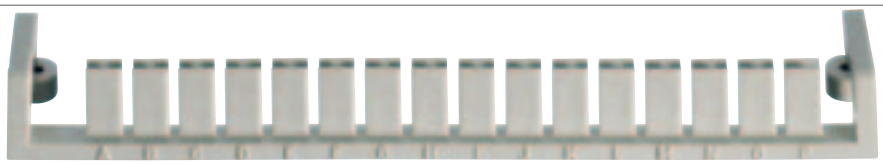			
Coding Strips FL Female connectors B, C, D, E, H11, M, CD128, E160 Inverse Male connectors Q, R, RD128, TE160	PBTP 30% GF	The Coding Strips must be screwed or riveted together with the connector; no additional drill holes are needed.	**083506**
Coding Strips UE Female connectors B, C, D, E, M, CD128, E160 Inverse Male connectors Q, R, RD128, TE160	PBTP 30% GF	The Coding Strips must be screwed or riveted together with the connector; no additional drill holes are needed.	**414705**

Mounting Hardware for Coding Strips *(not included with coding strips)*

Pos [1]	Description	Size	Pos [1]	Description	Size
1	Fillster head screw	M 1.6x12 DIN 84	6	Fillster head srew	M 2.5x12 DIN 84
2	Washer	A 1.8 DIN 125	7	Washer	2.7 DIN 125
3	Rivet		8	Hexagonal nut	M 2.5 DIN 934
4	Spring washer	A 1.7 DIN 137	9	Sheet metal srew	B 2.2x9.5 DIN 84
5	Hexagonal nut	M 1.6 DIN 934	10	Fillster head sheed	M 2.5x10 DIN 84

[1] Position numbers are from sketches on pages 195 and 196.

Coding Taps

Female connectors B/3, C/3, B/2, C/2, B, C, D, H11, H15, M, CD128, E160
Inverse Female connectors Q/3, R/3, Q/2, R/2, P, Q, R, RD128, TE160

The coding tabs are inserted into existing slots on the female connector. By using coding pliers, the corresponding pre-notched area an the male connector is recessed.
The number of coding tab locations available depends on the size and style of the connector.
To maintain connector stability, the maximum recommended number of coding possibilities is based on using only 1/2 the total available coding slots.
Thus the specific number of coding possibilities is shown in the table an page 194.
This coding system is supplied in a star-shaped assembly with 4 coding tabs.

Ordering Instructions

4 Coding tab assembly:

Fernale connectors
B/3, C/3, B/2, C/2, B, C, D, M, CD128, E160
Inverse Fernale connectors
Q/3, R/3, Q/2, R/2, P, Q, R, RD128, TE160

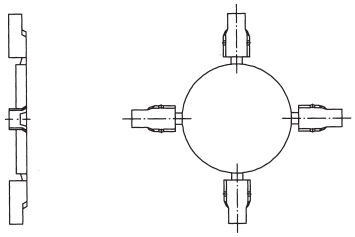

Part number: **033014**

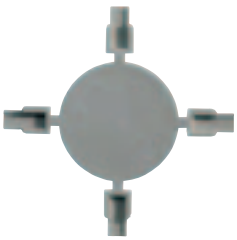

4 Coding tab assembly:

Fernale connectors
H11, H15

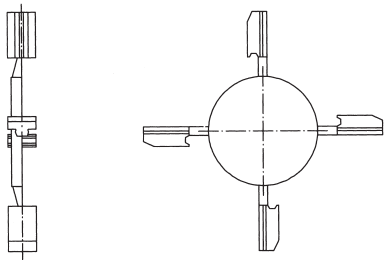

Part number: **434878**

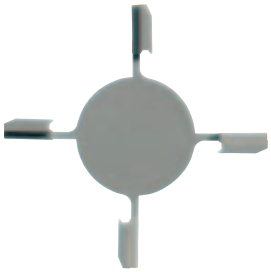

Coding pliers

For removing the coding position on the male connector

Part number: **473270**

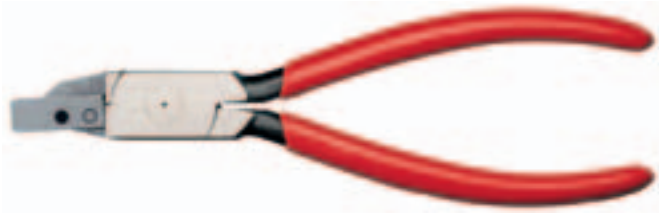

Coding Pins

Female connectors D, E, F, H15, H7/F24

The coding pins are inserted with an insertion tool into predrilled holes located between the contact rows on the female connector. Corresponding holes must then be drilled on the male connector.
Recessed hole points on the male connector provides alignment for drilling the corresponding holes.

Coding Instructions

Fernale connector

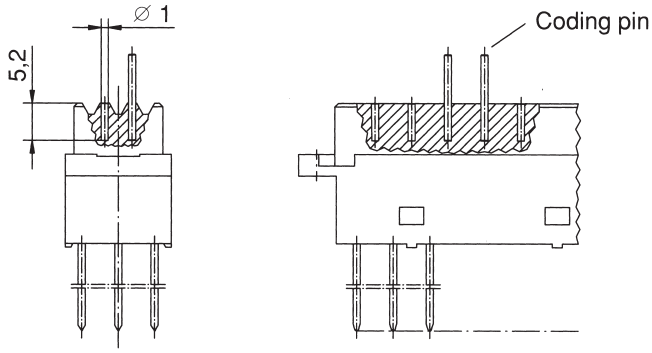

Male connector

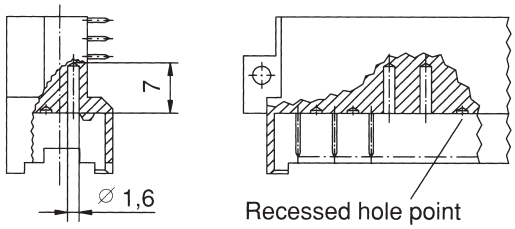

Suitable for Type D,E,F

Part number: **033007**

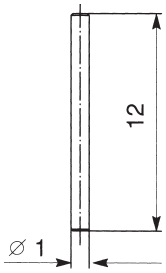

Suitable for Type H15,H7/F24

Part number: **424338**

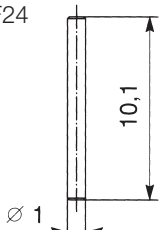

Coding Tool

For inserting coding pins into the predrilled holes on the female connector.

Part number: **063007**

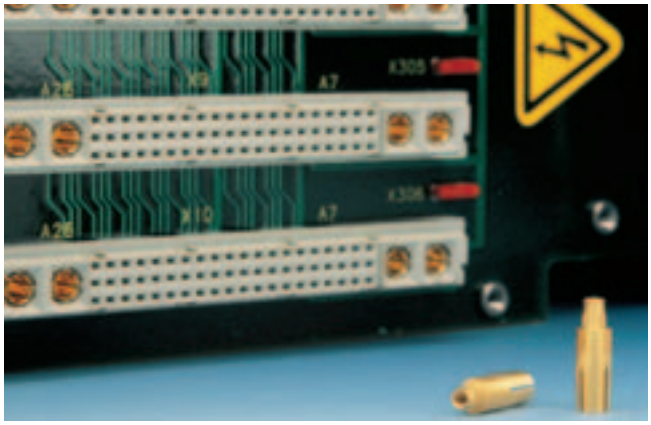

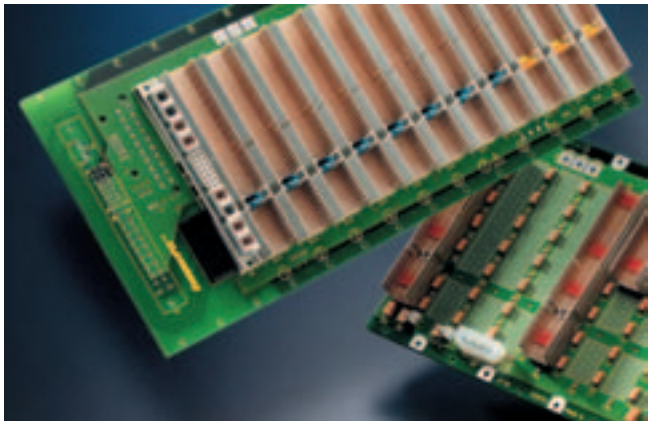

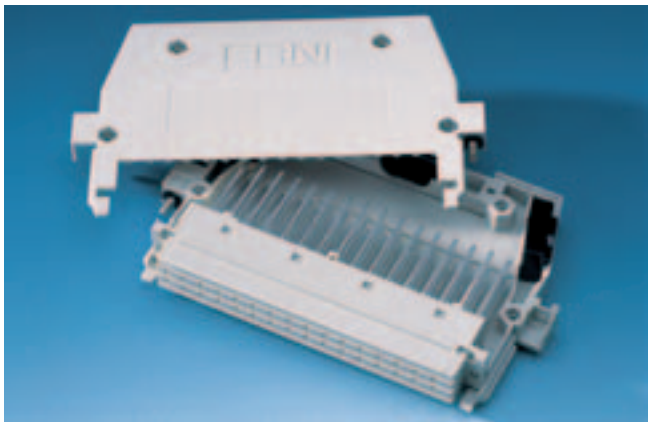

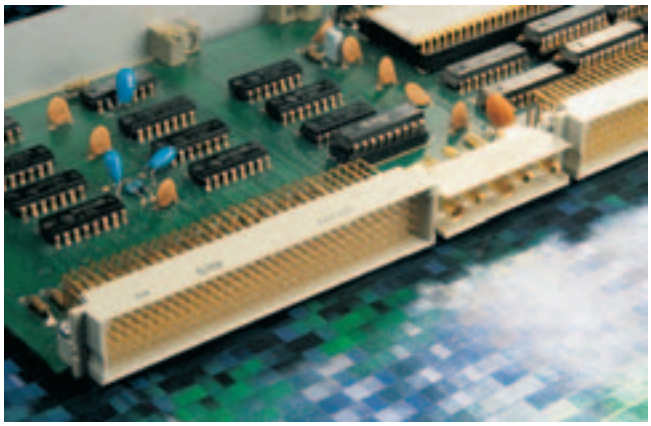

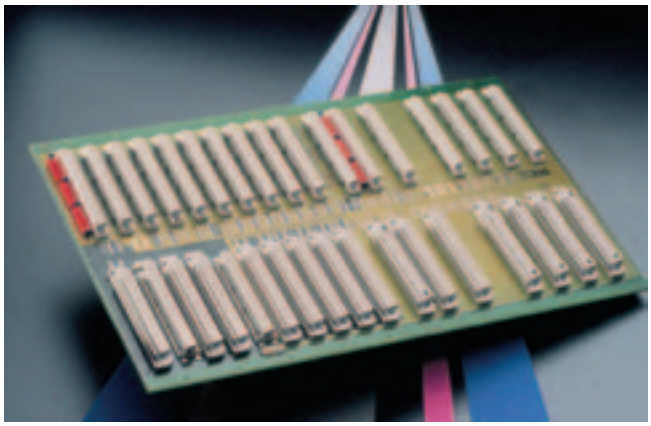

Applications

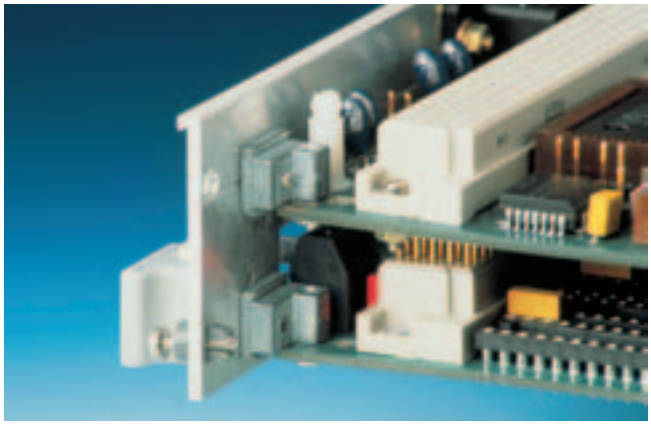

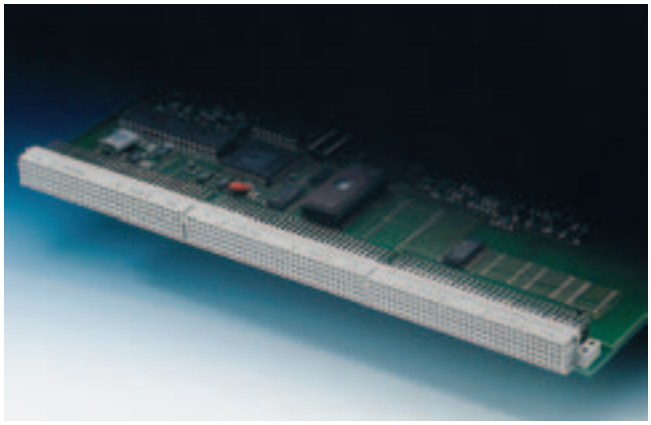

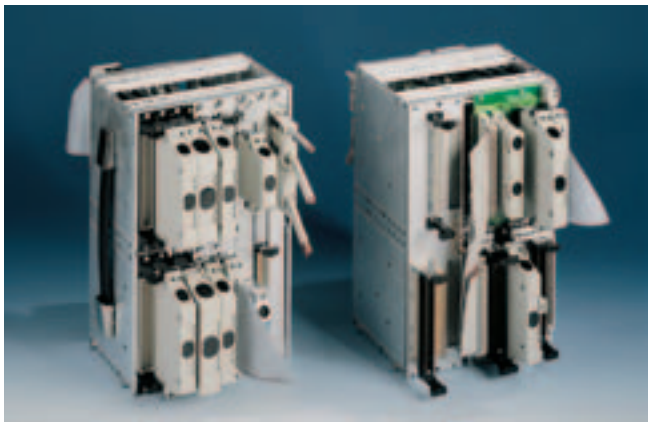

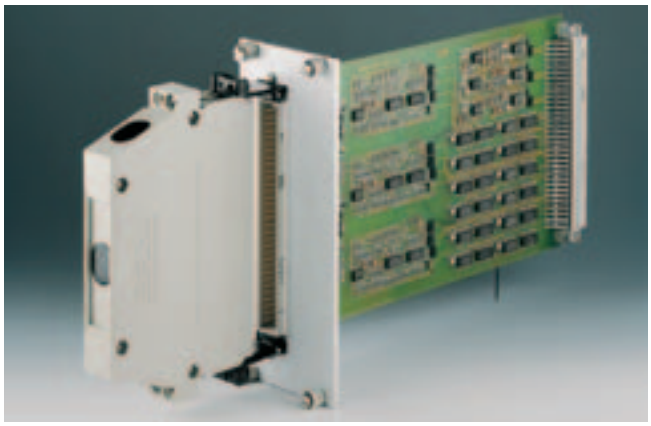

Part Number Index

Part Number	Page
003382	142
004177	141
004289	128
004362	62
004413	54
004427	134
004483	45
004484	88
004485	88
004498	45
004500	91
004777	116
004778	116
013025	134
013026	141
013058	116
013071	122
013073	122
013074	122
013096	116
013130	23
013131	52
013132	52
013133	30
013134	62
013135	27
013136	58
013154	110
013155	122
013156	113
013157	125
013160	122
013161	122
013164	122
013166	125
013167	125
013171	110
013172	110
013174	110
013175	110
013178	110
013183	113
013184	113
013254	52

Part Number	Page
013275	191
013414	138
013653	142
013970	148
014145	191
014374	189
014375	189
023545	23
023783	53
023816	104
024069	186
024070	187
024104	186
024201	152
033007	197
033014	196
033055	184
033298	104
033427	134
033428	135
033436	104
033579	135
033704	116
034190	163
034702	191
034796	191
034797	191
034798	191
034799	191
034800	191
034801	191
034802	191
043064	141
043582	58
043606	23
044639	163
053395	162
053400	162
053408	162
053410	162
053412	162
054755	149
054756	148
063007	197

DIN 41612 / IEC 60603-2 Connectors

Part Number Index

Part Number	Page
063046	142
063048	142
063049	142
063277	88
063300	138
063357	149
063358	148
063465	141
063515	55
063795	52
064312	162
064583	191
064584	191
064585	191
064586	191
064708	191
064709	191
064710	191
064711	191
064712	191
064713	191
064714	191
064715	191
064716	191
064717	191
064728	191
064729	191
064755	162
064757	162
083502	195
083504	195
083506	195
104552	52
123211	162
123589	62
123601	59
123717	58
123751	53
123905	182
134581	55
144705	55
144708	91
144710	88
144713	104

Part Number	Page
154954	59
154956	62
154957	62
154959	104
154961	85
154964	88
154970	110
154971	113
164306	85
164944	55
194576	85
194578	85
204752	68
214836	72
220051	12
220051	11
220051	11
220108	12
220108	11
220139	11
220153	11
220316	12
220364	12
220368	11
220369	11
220370	12
220411	12
220527	12
220527	11
220527	11
220681	12
220889	11
220890	11
220891	11
220892	11
220894	11
220991	12
223346	55
223368	73
223839	71
224408	68
224410	67
224411	71
224412	68

Part Number Index

Part Number	Page
224470	72
224471	71
224473	73
224474	73
224475	73
224476	73
230032	12
233226	168
233230	168
233232	168
233233	168
233234	168
233235	168
234062	188
234063	188
234064	188
234065	188
234066	188
234067	188
234069	66
234432	70
234516	68
234647	76
234712	83
234713	83
243246	169
244126	67
244139	95
244265	69
244268	67
244294	67
244295	68
244296	69
244297	69
244298	69
244299	69
244300	70
244301	71
244302	71
244303	71
244304	72
244305	72
244306	72
244307	72

Part Number	Page
244672	119
244999	107
254015	68
254062	157
254117	68
254118	107
254120	67
254121	68
254124	119
254135	66
254136	66
254137	67
254141	83
254320	80
254321	80
254326	101
254370	41
254498	77
254836	80
254838	80
254843	107
254844	107
254846	33
254847	33
254848	33
254851	67
254852	76
254854	76
254878	33
254887	76
254893	76
254895	77
254896	76
254897	72
254931	72
254960	119
254970	77
254975	119
254976	33
254977	107
254978	107
254979	107
254995	80
284035	77

DIN 41612 / IEC 60603-2 Connectors

Part Number Index

Part Number	Page
284082	70
284134	68
284135	68
284136	76
284164	34
284165	35
284166	35
284167	38
284168	38
284169	41
284170	71
284171	76
284172	77
284173	80
284174	77
284175	77
284176	80
284177	33
284178	33
284179	33
284180	107
284181	107
284182	107
284183	107
284184	119
284185	119
284258	94
284259	94
284260	94
284261	94
284262	94
284263	94
284264	94
284269	95
284270	95
284272	88
284308	72
284313	119
284318	80
284319	38
284323	76
284324	98
284325	98
284418	41

Part Number	Page
284419	101
284420	83
284650	35
284651	34
284652	69
284653	95
284752	68
284870	34
284871	34
284873	34
284874	34
284875	34
284876	35
284877	35
284878	35
284880	35
284881	35
284882	35
284883	35
284886	38
284888	38
284889	38
284891	38
284895	38
284896	41
284933	76
284938	77
284941	77
284942	77
284944	77
284951	107
284968	69
284970	69
284971	66
284975	70
284976	71
284977	71
284979	71
284984	72
284991	72
294694	34
294710	157
294711	158
294712	158

Part Number Index

Part Number	Page
294716	101
294721	49
294722	49
294728	157
294730	160
294732	156
294733	157
294736	156
294737	157
294738	76
294740	156
294742	67
294743	156
294863	101
294927	49
303284	144
303484	144
304221	84
304225	84
304421	84
304425	84
314404	149
314425	149
314447	149
333139	191
333139	183
334203	144
334210	84
334211	84
334214	84
334215	84
334403	144
334410	84
334411	84
334414	84
334415	84
344234	150
344265	150
344434	150
344451	150
344465	150
354108	159
354109	160
354110	160

Part Number	Page
354111	160
354112	159
354116	156
354117	160
354133	160
354134	98
354135	94
354139	157
354140	157
354152	158
354155	160
354156	160
354157	158
354158	160
354159	98
354160	159
354161	159
354162	158
354163	158
354164	159
354165	160
354166	158
354173	159
354215	159
354219	158
354220	98
354223	158
354226	159
354229	159
354239	158
354240	159
354246	156
354247	156
354251	98
354252	156
354381	83
354382	88
354383	91
354384	88
354385	83
354388	91
354395	83
354396	83
354397	88

Part Number Index

Part Number	Page
354399	83
354400	83
354406	88
354418	83
354972	128
364104	49
364366	156
374849	156
413168	174
413169	173
413170	175
413171	179
413172	179
413173	180
413637	174
413638	173
413640	179
413852	27
413853	27
413858	58
413859	58
413864	59
413865	59
413971	191
413971	183
414068	184
414082	184
414219	191
414219	183
414327	76
414377	24
414378	24
414379	24
414380	24
414401	53
414403	53
414404	53
414406	54
414407	54
414409	54
414410	54
414412	54
414413	54
414415	54

Part Number	Page
414416	54
414574	174
414575	173
414702	83
414705	195
414715	191
414715	183
424188	62
424189	62
424195	91
424201	88
424207	30
424213	45
424219	45
424338	197
424623	184
424654	169
424655	169
424797	134
424798	134
424801	134
424803	134
424804	134
424806	141
424807	141
424810	141
424812	141
424813	141
433215	191
433222	164
433590	128
433591	128
434286	191
434286	183
434325	54
434329	59
434878	196
471555	189
471556	12
471556	12
471556	12
471556	12
471556	12
471584	11

Part Number Index

Part Number	Page
471584	11
471590	11
471591	11
471592	11
471597	12
471606	12
471608	12
471628	12
471629	12
471630	12
471631	12
471632	12
471633	12
471634	12
471637	12
471638	12
471640	12
471677	11
471684	11
471684	11
471684	11
471694	11
471694	11
471694	11
471710	12
471710	12
471729	12
471729	12
471729	12
471729	12
471787	11
471791	11
471793	12
471793	12
471836	11
471837	11
471839	11
471855	12
471855	11
471855	11
471867	11
471867	11
471867	11
471867	11

Part Number	Page
471867	11
471920	11
471922	12
471943	11
473161	11
473188	184
473200	184
473270	196
473447	12
473447	12
473447	11
473447	11
473447	11
473447	11
473449	11
533201	54
533202	54
533203	53
533206	23
533207	23
533208	23
533210	131
533401	54
533402	54
533403	53
533404	53
533406	23
533407	23
533408	23
533410	131
533423	53
593248	179
593250	179
593252	179
593254	179
593256	180
593808	153
593809	153
593811	153
593812	153
593814	152
593815	152
593817	152
593818	152

Part Number Index

Part Number	Page
593927	45
593928	45
593933	45
593934	45
593952	45
593964	45
593990	148
593991	148
594056	27
594096	131
594157	153
594159	153
594160	153
594162	152
594163	152
594165	152
594166	152
594168	163
594170	163
594172	163
594174	163
594176	163
594178	163
594180	163
594182	163
594184	164
594207	162
594209	162
594211	162
594213	162
594215	162
594219	164
594220	164
594221	163
594223	163
594225	163
594227	163
594229	163
594231	163
594233	164
594343	138
594400	59
594470	182
594491	148

Part Number	Page
594566	135
594567	135
594569	135
594570	135
594575	142
594576	142
594578	142
594579	142
594613	27
594614	27
594633	58
594634	58
594635	58
594636	58
594638	59
594640	59
594641	59
594750	175
594751	175
594752	175
594802	138
913049	184
913615	116
913637	163
913716	163
913738	169
913767	104
914004	164
354197	156

Notes

Find your correct contact person
on **erni.com/locations**

© ERNI International AG 2020 • Printed in Germany • A policy of continuous improvement is followed and the right to alter any published data without notice is reserved. ERNI®, ERNI WoR&D®, CONNECTED BY COMPETENCE®, MicroBridge®, MicroCon®, MicroStac®, MicroSpeed®, MiniBridge®, MaxiBridge®, iBridge Ultra®, ERmet®, ERmet ZD®, ERmet ZDplus®, ERmet ZD HD®, ERbic®, ZipCon® and INTERact® are trademarks (registered or applied for in various countries) of ERNI Production GmbH & Co. KG.

Mouser Electronics

Authorized Distributor

Click to View Pricing, Inventory, Delivery & Lifecycle Information:

ERNI Electronics:

413971 064709 434286 414219 414715

ООО «ЛайфЭлектроникс» “LifeElectronics” LLC

ИНН 7805602321 КПП 780501001 Р/С 40702810122510004610 ФАКБ "АБСОЛЮТ БАНК" (ЗАО) в г.Санкт-Петербурге К/С 30101810900000000703 БИК 044030703

Компания «Life Electronics» занимается поставками электронных компонентов импортного и отечественного производства от производителей и со складов крупных дистрибьюторов Европы, Америки и Азии.

С конца 2013 года компания активно расширяет линейку поставок компонентов по направлению коаксиальный кабель, кварцевые генераторы и конденсаторы (керамические, пленочные, электролитические), за счёт заключения дистрибьюторских договоров

Мы предлагаем:

- *Конкурентоспособные цены и скидки постоянным клиентам.*
- *Специальные условия для постоянных клиентов.*
- *Подбор аналогов.*
- *Поставку компонентов в любых объемах, удовлетворяющих вашим потребностям.*

- *Приемлемые сроки поставки, возможна ускоренная поставка.*
- *Доставку товара в любую точку России и стран СНГ.*
- *Комплексную поставку.*
- *Работу по проектам и поставку образцов.*
- *Формирование склада под заказчика.*

- *Сертификаты соответствия на поставляемую продукцию (по желанию клиента).*
- *Тестирование поставляемой продукции.*
- *Поставку компонентов, требующих военную и космическую приемку.*
- *Входной контроль качества.*
- *Наличие сертификата ISO.*

В составе нашей компании организован Конструкторский отдел, призванный помогать разработчикам, и инженерам.

Конструкторский отдел помогает осуществить:

- *Регистрацию проекта у производителя компонентов.*
- *Техническую поддержку проекта.*
- *Защиту от снятия компонента с производства.*
- *Оценку стоимости проекта по компонентам.*
- *Изготовление тестовой платы монтаж и пусконаладочные работы.*

Тел: +7 (812) 336 43 04 (многоканальный)
Email: org@lifeelectronics.ru

www.lifeelectronics.ru