Direct Ring Lighting/Low Angle Ring Lighting

FLV-DR Series/-DL Series

Order Information

	Model	Light Color	Electricity (W)	Weight (g)	Connectable Option	Connectable Lighting Controller ✻		Dimensions
					Diffusion Plates	Camera-mount Lighting Controller FLV-TCC Series	Analog Lighting Controller FLV-ATC Series	
Direct Ring Lighting	**FLV-DR3220W**	White	1.2	60	**FLV-DR3220DF**	◎	◎	A
	FLV-DR3220R	Red	1.2	60	**FLV-DR3220DF**	◎	◎	A
	FLV-DR3220B	Blue	1.2	60	**FLV-DR3220DF**	◎	◎	A
	FLV-DR5030W	White	2.4	60	**FLV-DR5030DF**	◎	◎	B
	FLV-DR5030R	Red	1.6	60	**FLV-DR5030DF**	◎	◎	B
	FLV-DR5030B	Blue	2.4	60	**FLV-DR5030DF**	◎	◎	B
	FLV-DR5030IR	Infrared Light	1.5	60	**FLV-DR5030DF**	◎	◎	B
	FLV-DR5030UV	Ultraviolet Light	2.9	60	**FLV-DR5030DF**	◎	◎	B
	FLV-DR6615W	White	3.4	120	**FLV-DR6615DF**	◎	◎	C
	FLV-DR6615R	Red	2.4	120	**FLV-DR6615DF**	◎	◎	C
	FLV-DR6615B	Blue	3.4	120	**FLV-DR6615DF**	◎	◎	C
	FLV-DR7000W	White	3.6	110	**FLV-DR7000DF**	◎	◎	D
	FLV-DR7000R	Red	2.4	110	**FLV-DR7000DF**	◎	◎	D
	FLV-DR7000B	Blue	3.6	110	**FLV-DR7000DF**	◎	◎	D
	FLV-DR7030W	White	3.6	120	**FLV-DR7030DF**	◎	◎	E
	FLV-DR7030R	Red	2.4	120	**FLV-DR7030DF**	◎	◎	E
	FLV-DR7030B	Blue	3.6	120	**FLV-DR7030DF**	◎	◎	E
	FLV-DR7030IR	Infrared Light	2.4	120	**FLV-DR7030DF**	◎	◎	E
	FLV-DR7030UV	Ultraviolet Light	5.3	120	**FLV-DR7030DF**	◎	◎	E
	FLV-DR9000W	White	6.3	230	**FLV-DR9000DF**	◎	◎	F
	FLV-DR9000R	Red	4.4	230	**FLV-DR9000DF**	◎	◎	F
	FLV-DR9000B	Blue	6.3	230	**FLV-DR9000DF**	◎	◎	F
	FLV-DR9030W	White	5.8	200	**FLV-DR9030DF**	◎	◎	G
	FLV-DR9030R	Red	4.4	200	**FLV-DR9030DF**	◎	◎	G
	FLV-DR9030B	Blue	5.8	200	**FLV-DR9030DF**	◎	◎	G
	FLV-DR9030IR	Infrared Light	3.9	200	**FLV-DR9030DF**	◎	◎	G
	FLV-DR9030UV	Ultraviolet Light	6.8	200	**FLV-DR9030DF**	◎	◎	G
	FLV-DR9215W	White	5.3	200	**FLV-DR9215DF**	◎	◎	H
	FLV-DR9215R	Red	4.6	200	**FLV-DR9215DF**	◎	◎	H
	FLV-DR9215B	Blue	5.3	200	**FLV-DR9215DF**	◎	◎	H
	FLV-DR12030W	White	8.7	360	**FLV-DR12030DF**	○	◎	I
	FLV-DR12030R	Red	6.5	360	**FLV-DR12030DF**	◎	◎	I
	FLV-DR12030B	Blue	8.7	360	**FLV-DR12030DF**	○	◎	I
Low Angle Ring Lighting	**FLV-DL5890W**	White	1.6	90	**FLV-DL5890DF**	◎	◎	J
	FLV-DL5890R	Red	1.2	90	**FLV-DL5890DF**	◎	◎	J
	FLV-DL5890B	Blue	1.6	90	**FLV-DL5890DF**	◎	◎	J
	FLV-DL7260W	White	4.4	120	**FLV-DL7260DF**	◎	◎	K
	FLV-DL7260R	Red	3.5	120	**FLV-DL7260DF**	◎	◎	K
	FLV-DL7260B	Blue	4.4	120	**FLV-DL7260DF**	◎	◎	K
	FLV-DL9090W	White	2.4	100	**-**	◎	◎	L
	FLV-DL9090R	Red	1.6	100	**-**	◎	◎	L
	FLV-DL9090B	Blue	2.4	100	**-**	◎	◎	L
	FLV-DL12060W	White	11.6	310	**FLV-DL12060DF**	○	◎	M
	FLV-DL12060R	Red	7.7	310	**FLV-DL12060DF**	○	◎	M
	FLV-DL12060B	Blue	11.6	310	**FLV-DL12060DF**	○	◎	M
	FLV-DL15060W	White	13.5	260	**FLV-DL15060DF**	○	◎	N
	FLV-DL15060R	Red	10.1	260	**FLV-DL15060DF**	○	◎	N
	FLV-DL15060B	Blue	13.5	260	**FLV-DL15060DF**	○	◎	N

✻: The table shows whether each Lighting can be connected to Lighting Controllers. When multiple Lightings are connected to a Lighting Controller, make sure that the total electricity of all connected Lightings does not exceed the electricity of connectable lighting of each Lighting Controller.
◎: Connectable. Light can be continuously emitted.
○: Connectable. Light can be emitted only while the trigger is input.
×: Not connectable

Direct Ring Lighting/Low Angle Ring Lighting FLV-DR Series/-DL Series

Dimensions

●Direct Ring Lighting

A FLV-DR3220□

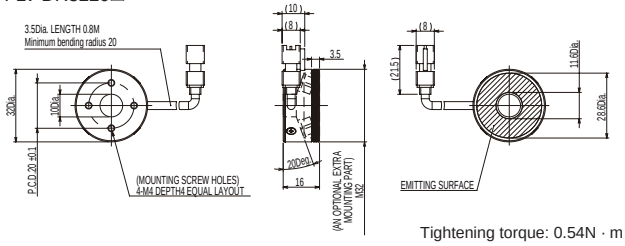

Tightening torque: 0.54N · m

B FLV-DR5030□

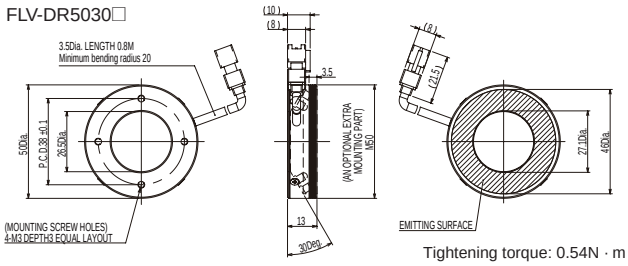

Tightening torque: 0.54N · m

C FLV-DR6615□

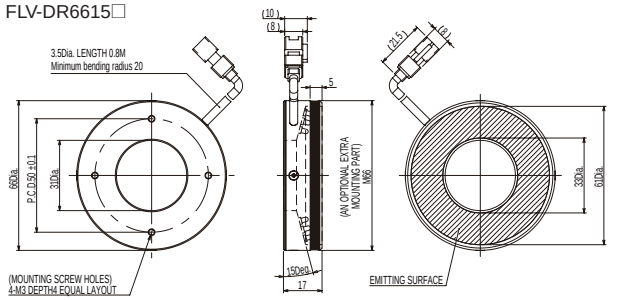

Tightening torque: 0.54N · m

D FLV-DR7000□

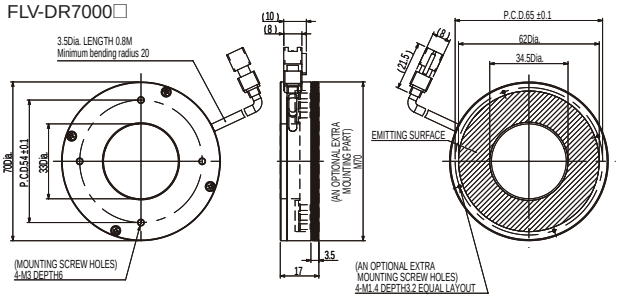

Tightening torque: 0.54N · m

E FLV-DR7030□

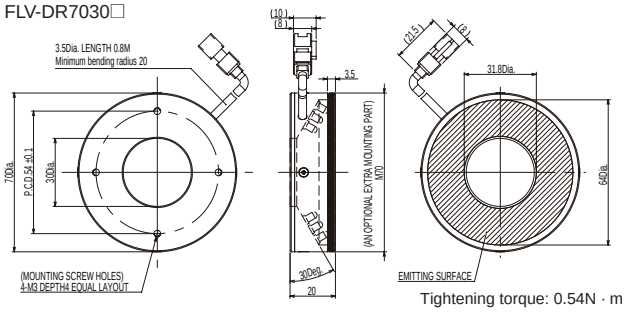

Tightening torque: 0.54N · m

F FLV-DR9000□

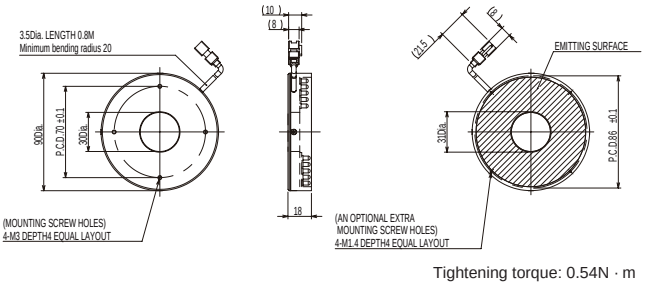

Tightening torque: 0.54N · m

G FLV-DR9030□

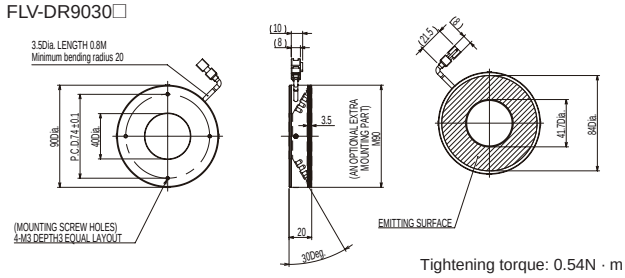

Tightening torque: 0.54N · m

H FLV-DR9215□

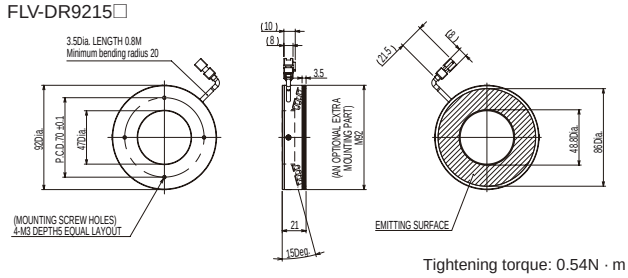

Tightening torque: 0.54N · m

I FLV-DR12030□

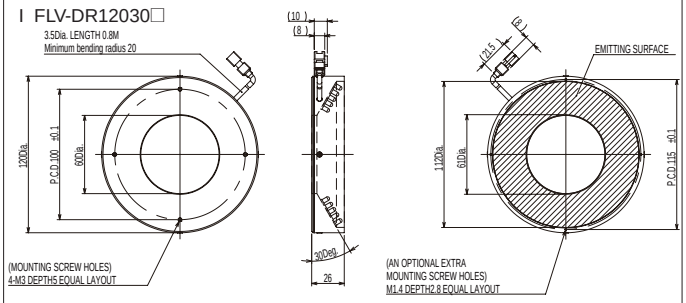

Tightening torque: 0.54N · m

OMRON

Direct Ring Lighting/Low Angle Ring Lighting FLV-DR Series/-DL Series

●Low Angle Ring Lighting

J FLV-DL5890□

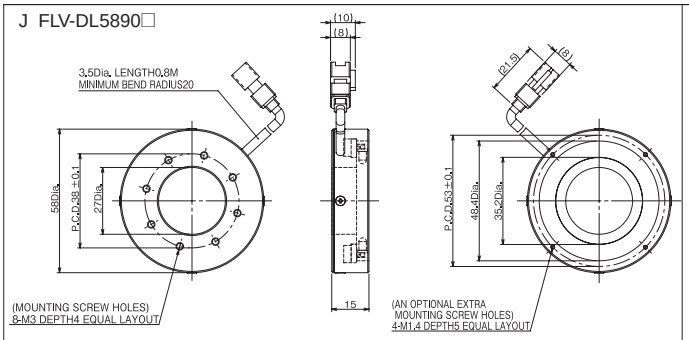

Tightening torque: 0.54N · m

K FLV-DL7260□

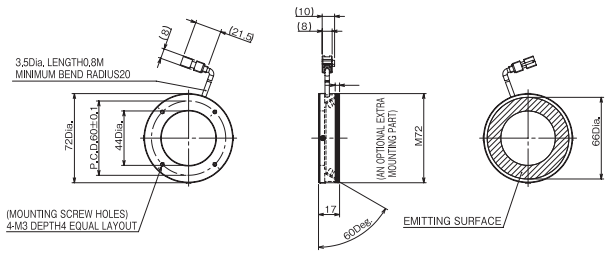

Tightening torque: 0.54N · m

L FLV-DL9090□

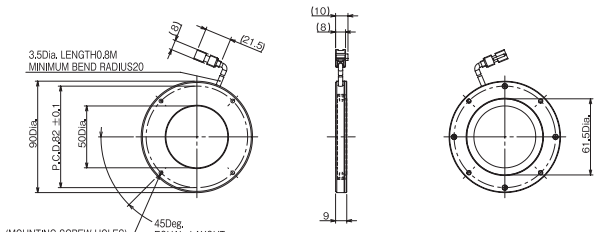

Tightening torque: 0.54N · m

M FLV-DL12060□

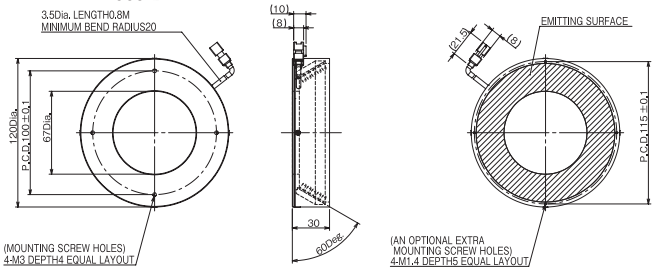

N FLV-DL15060□

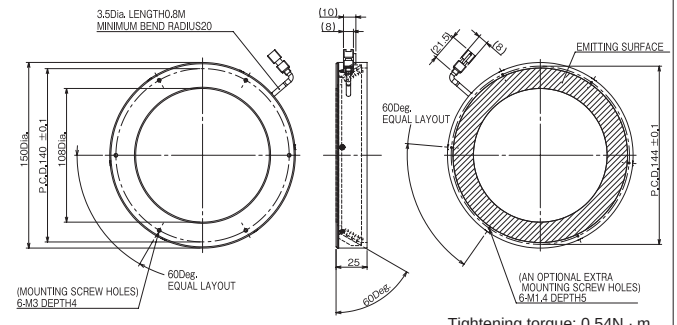

Tightening torque: 0.54N · m

Bar Lighting

FLV-BR Series

Order Information

Model	Light Color	Electricity (W)	Weight (g)	Connectable Option	Connectable Lighting Controller ✻		Dimensions
				Diffusion Plates	Camera-mount Lighting Controller FLV-TCC Series	Analog Lighting Controller FLV-ATC Series	
FLV-BR6022W	White	1.2	60	**FLV-BR6022DF**	◎	◎	A
FLV-BR6022R	Red	1.2	60	**FLV-BR6022DF**	◎	◎	A
FLV-BR6022B	Blue	1.2	60	**FLV-BR6022DF**	◎	◎	A
FLV-BR6022IR	Infrared Light	0.9	60	**FLV-BR6022DF**	◎	◎	A
FLV-BR6022UV	Ultraviolet Light	1.7	60	**FLV-BR6022DF**	◎	◎	A
FLV-BR8532W	White	3.9	130	**FLV-BR8532DF**	◎	◎	B
FLV-BR8532R	Red	2.9	130	**FLV-BR8532DF**	◎	◎	B
FLV-BR8532B	Blue	3.9	130	**FLV-BR8532DF**	◎	◎	B
FLV-BR11222W	White	2.4	100	**FLV-BR11222DF**	◎	◎	C
FLV-BR11222R	Red	2	100	**FLV-BR11222DF**	◎	◎	C
FLV-BR11222B	Blue	2.4	100	**FLV-BR11222DF**	◎	◎	C
FLV-BR11222IR	Infrared Light	1.7	100	**FLV-BR11222DF**	◎	◎	C
FLV-BR11222UV	Ultraviolet Light	3.9	100	**FLV-BR11222DF**	◎	◎	C
FLV-BR14030W	White	6	140	**FLV-BR14030DF**	◎	◎	D
FLV-BR14030R	Red	4.1	140	**FLV-BR14030DF**	◎	◎	D
FLV-BR14030B	Blue	6	140	**FLV-BR14030DF**	◎	◎	D
FLV-BR15020W	White	2.9	120	**FLV-BR15020DF**	◎	◎	E
FLV-BR15020R	Red	2.4	120	**FLV-BR15020DF**	◎	◎	E
FLV-BR15020B	Blue	2.9	120	**FLV-BR15020DF**	◎	◎	E
FLV-BR21222W	White	6	140	**FLV-BR21222DF**	◎	◎	F
FLV-BR21222R	Red	4.4	140	**FLV-BR21222DF**	◎	◎	F
FLV-BR21222B	Blue	6	140	**FLV-BR21222DF**	◎	◎	F
FLV-BR21230W	White	8.4	220	**FLV-BR21230DF**	○	◎	G
FLV-BR21230R	Red	6.8	220	**FLV-BR21230DF**	◎	◎	G
FLV-BR21230B	Blue	8.4	220	**FLV-BR21230DF**	○	◎	G
FLV-BR21230IR	Infrared Light	6	220	**FLV-BR21230DF**	◎	◎	G
FLV-BR21230UV	Ultraviolet Light	13	220	**FLV-BR21230DF**	○	◎	G
FLV-BR38037W	White	14.9	430	**FLV-BR48031DF**	○	◎	H
FLV-BR38037R	Red	11.6	430	**FLV-BR48031DF**	○	◎	H
FLV-BR38037B	Blue	14.9	430	**FLV-BR48031DF**	○	◎	H
FLV-BR48031W	White	17.6	460	**FLV-BR48031DF**	×	◎	I
FLV-BR48031R	Red	15.9	460	**FLV-BR48031DF**	×	◎	I
FLV-BR48031B	Blue	17.6	460	**FLV-BR48031DF**	×	◎	I

✻: The table shows whether each Lighting can be connected to Lighting Controllers. When multiple Lightings are connected to a Lighting Controller, make sure that the total electricity of all connected Lightings does not exceed the electricity of connectable lighting of each Lighting Controller.
◎: Connectable. Light can be continuously emitted.
○: Connectable. Light can be emitted only while the trigger is input.
×: Not connectable

Dimensions

A FLV-BR6022□

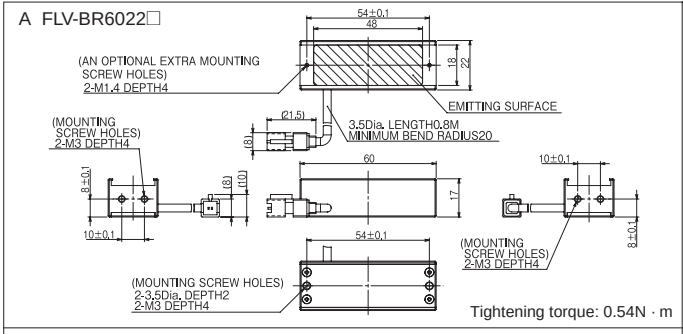

Tightening torque: 0.54N · m

B FLV-BR8532□

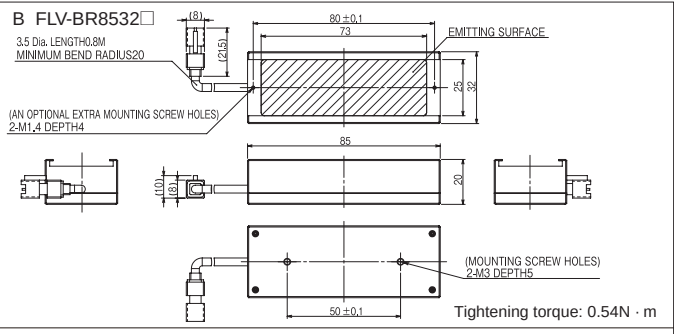

Tightening torque: 0.54N · m

C FLV-BR11222□

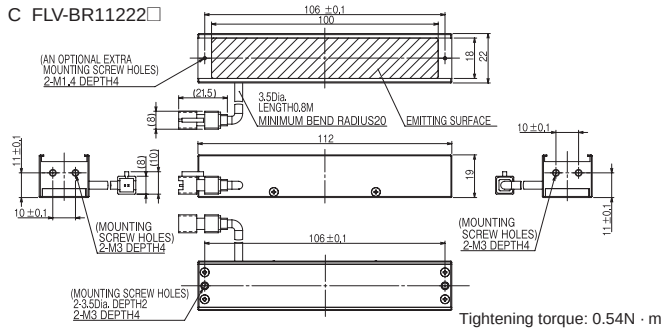

Tightening torque: 0.54N · m

D FLV-BR14030□

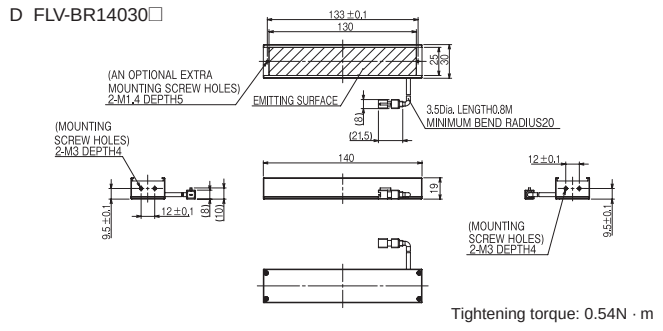

Tightening torque: 0.54N · m

E FLV-BR15020□

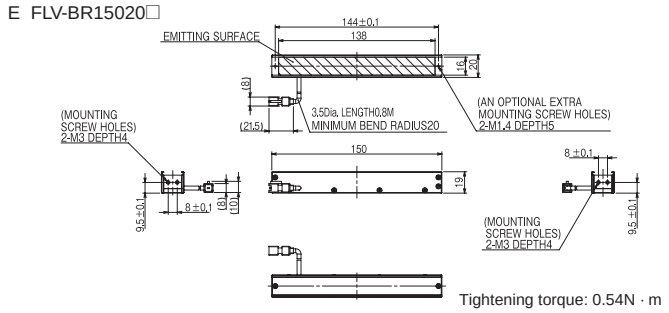

Tightening torque: 0.54N · m

F FLV-BR21222□

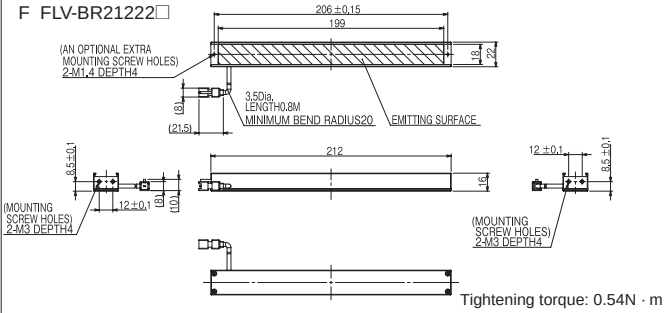

Tightening torque: 0.54N · m

G FLV-BR21230□

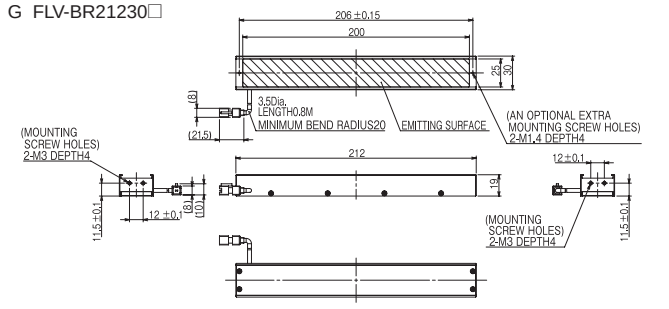

Tightening torque: 0.54N · m

H FLV-BR38037□

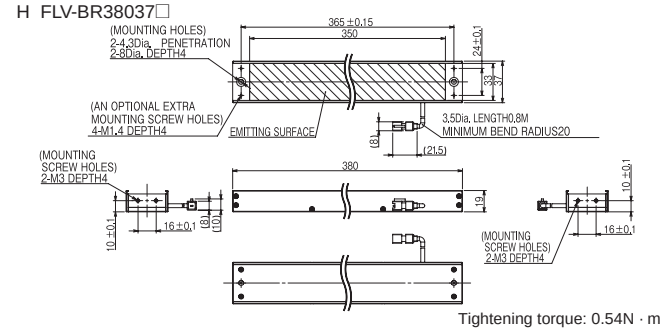

Tightening torque: 0.54N · m

I FLV-BR48031□

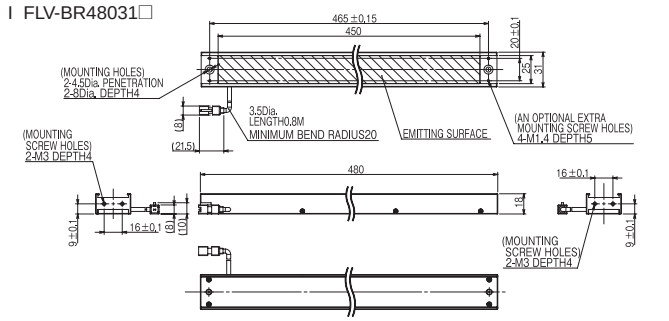

Tightening torque: 0.54N · m

Coaxial Lighting
FLV-CL Series

Order Information

Model	Light Color	Electricity (W)	Weight (g)	Connectable Lighting Controller ✻		Dimensions
				Camera-mount Lighting Controller FLV-TCC Series	Analog Lighting Controller FLV-ATC Series	
FLV-CL30W	White	2	110	◎	◎	A
FLV-CL30R	Red	1.1	110	◎	◎	A
FLV-CL30B	Blue	2	110	◎	◎	A
FLV-CL40W	White	3.6	170	◎	◎	B
FLV-CL40R	Red	2.2	170	◎	◎	B
FLV-CL40B	Blue	3.6	170	◎	◎	B
FLV-CL60W	White	9.2	380	○	◎	C
FLV-CL60R	Red	4.8	380	◎	◎	C
FLV-CL60B	Blue	9.2	380	○	◎	C
FLV-CL60IR	Infrared Light	3.9	380	◎	◎	C
FLV-CL60UV	Ultraviolet Light	9.2	380	○	◎	C
FLV-CL80W	White	14.4	580	○	◎	D
FLV-CL80R	Red	9.6	580	○	◎	D
FLV-CL80B	Blue	14.4	580	○	◎	D
FLV-CL100W	White	21.2	820	×	◎	E
FLV-CL100R	Red	14	820	○	◎	E
FLV-CL100B	Blue	21.2	820	×	◎	E

✻: The table shows whether each Lighting can be connected to Lighting Controllers. When multiple Lightings are connected to a Lighting Controller, make sure that the total electricity of all connected Lightings does not exceed the electricity of connectable lighting of each Lighting Controller.
◎: Connectable. Light can be continuously emitted. ○: Connectable. Light can be emitted only while the trigger is input. ×: Not connectable

Dimensions

A FLV-CL30□

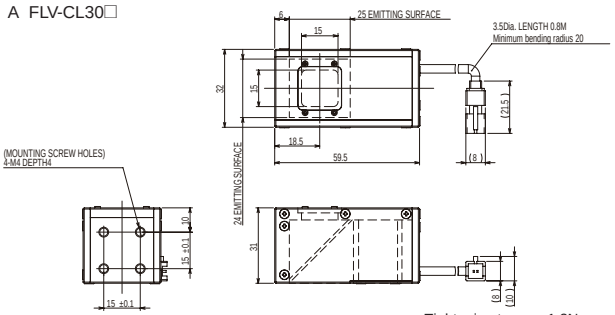

Tightening torque: 1.2N · m

B FLV-CL40□

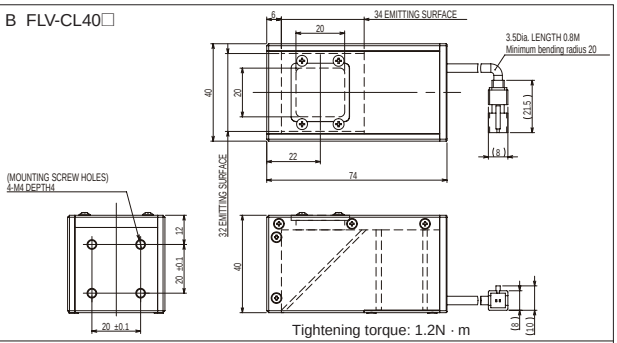

Tightening torque: 1.2N · m

C FLV-CL60□

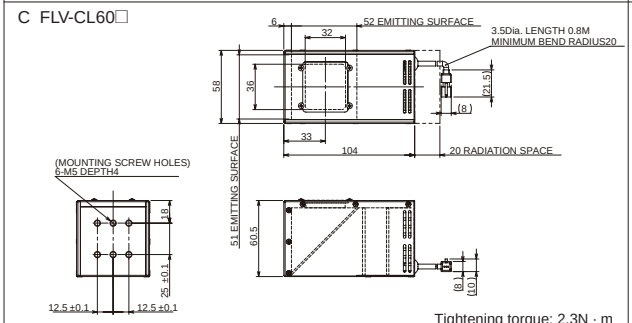

Tightening torque: 2.3N · m

D FLV-CL80□

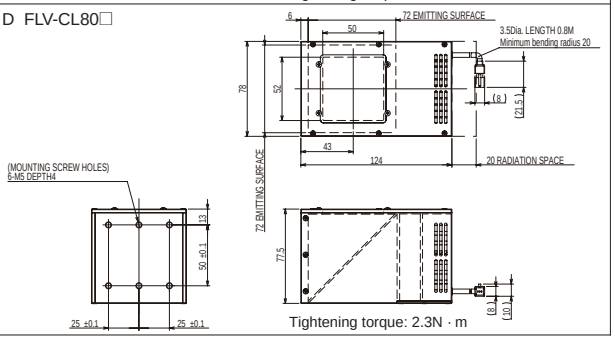

Tightening torque: 2.3N · m

E FLV-CL100□

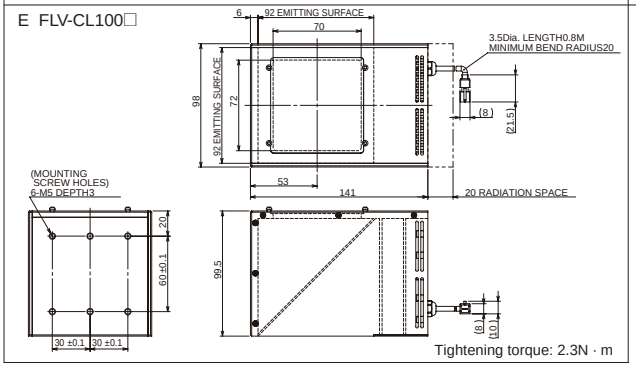

Tightening torque: 2.3N · m

OMRON

Shadowless Lighting
FLV-FS Series

Order Information

Model	Light Color	Electricity (W)	Weight (g)	Connectable Lighting Controller ✻		Dimensions
				Camera-mount Lighting Controller FLV-TCC Series	Analog Lighting Controller FLV-ATC Series	
FLV-FS74W	White	4.1	140	◎	◎	A
FLV-FS74R	Red	2.9	140	◎	◎	A
FLV-FS74B	Blue	4.1	140	◎	◎	A

✻: The table shows whether each Lighting can be connected to Lighting Controllers. When multiple Lightings are connected to a Lighting Controller, make sure that the total electricity of all connected Lightings does not exceed the electricity of connectable lighting of each Lighting Controller.
◎: Connectable. Light can be continuously emitted.
◯: Connectable. Light can be emitted only while the trigger is input.
×: Not connectable

Dimensions

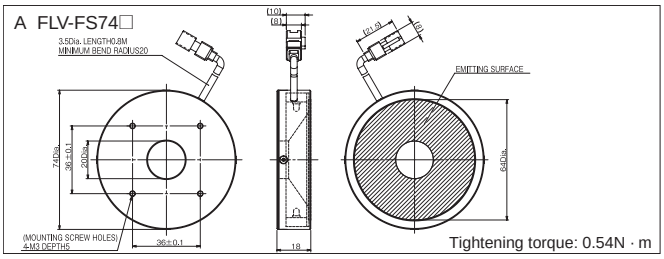

Shadowless Lighting

FLV-FR Series

Order Information

Model	Light Color	Electricity (W)	Weight (g)	Connectable Lighting Controller ✻		Dimensions
				Camera-mount Lighting Controller FLV-TCC Series	Analog Lighting Controller FLV-ATC Series	
FLV-FR114W	White	3.2	270	◎	◎	A
FLV-FR114R	Red	2.4	270	◎	◎	A
FLV-FR114B	Blue	3.2	270	◎	◎	A
FLV-FR150W	White	4.8	500	◎	◎	B
FLV-FR150R	Red	2.9	500	◎	◎	B
FLV-FR150B	Blue	4.8	500	◎	◎	B

✻: The table shows whether each Lighting can be connected to Lighting Controllers. When multiple Lightings are connected to a Lighting Controller, make sure that the total electricity of all connected Lightings does not exceed the electricity of connectable lighting of each Lighting Controller.
◎: Connectable. Light can be continuously emitted.
○: Connectable. Light can be emitted only while the trigger is input.
×: Not connectable

Dimensions

A FLV-FR114□

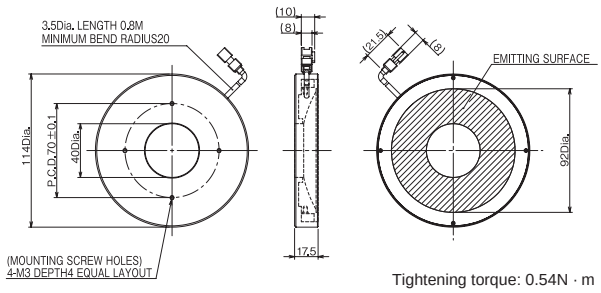

Tightening torque: 0.54N · m

B FLV-FR150□

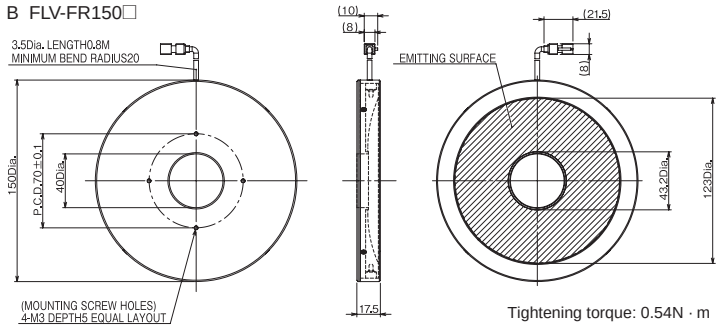

Tightening torque: 0.54N · m

Shadowless Lighting

FLV-FP Series

Order Information

Model	Light Color	Electricity (W)	Weight (g)	Connectable Lighting Controller ✻		Dimensions
				Camera-mount Lighting Controller FLV-TCC Series	Analog Lighting Controller FLV-ATC Series	
FLV-FP130W	White	6.8	320	◎	◎	A
FLV-FP130R	Red	6	320	◎	◎	A
FLV-FP130B	Blue	6.8	320	◎	◎	A

✻: The table shows whether each Lighting can be connected to Lighting Controllers. When multiple Lightings are connected to a Lighting Controller, make sure that the total electricity of all connected Lightings does not exceed the electricity of connectable lighting of each Lighting Controller.
◎: Connectable. Light can be continuously emitted.
◯: Connectable. Light can be emitted only while the trigger is input.
×: Not connectable

Dimensions

A FLV-FP130□

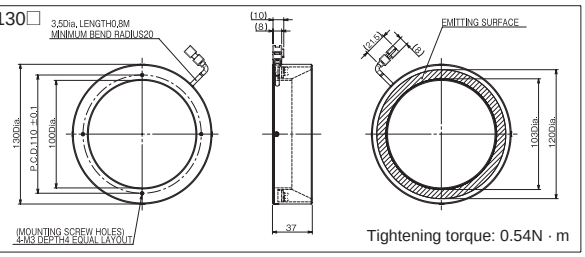

Tightening torque: 0.54N · m

Shadowless Lighting

FLV-FQ Series

Order Information

Model	Light Color	Electricity (W)	Weight (g)	Connectable Lighting Controller ✻		Dimensions
				Camera-mount Lighting Controller FLV-TCC Series	Analog Lighting Controller FLV-ATC Series	
FLV-FQ48W	White	1.8	100	◎	◎	A
FLV-FQ48R	Red	1.1	100	◎	◎	A
FLV-FQ48B	Blue	1.8	100	◎	◎	A

✻: The table shows whether each Lighting can be connected to Lighting Controllers. When multiple Lightings are connected to a Lighting Controller, make sure that the total electricity of all connected Lightings does not exceed the electricity of connectable lighting of each Lighting Controller.
◎: Connectable. Light can be continuously emitted.
○: Connectable. Light can be emitted only while the trigger is input.
×: Not connectable

Dimensions

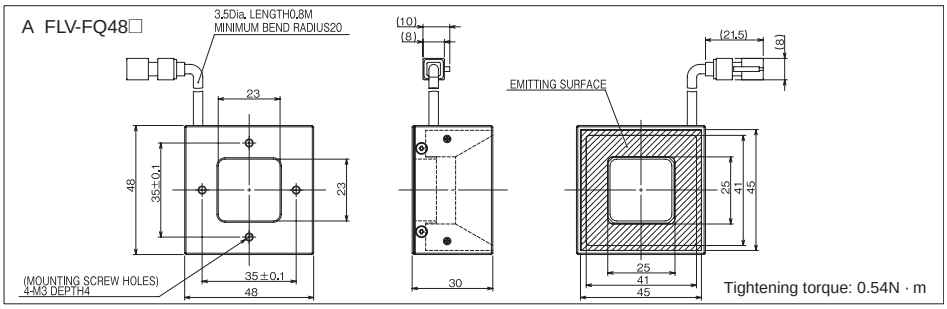

Direct Back Lighting
FLV-DB Series

Order Information

Model	Light Color	Electricity (W)	Weight (g)	Connectable Lighting Controller ✻		Dimensions
				Camera-mount Lighting Controller FLV-TCC Series	Analog Lighting Controller FLV-ATC Series	
FLV-DB3729W	White	0.9	50	◎	◎	A
FLV-DB3729R	Red	0.9	50	◎	◎	A
FLV-DB3729B	Blue	0.9	50	◎	◎	A
FLV-DB10181W	White	8	160	○	◎	B
FLV-DB10181R	Red	4.8	160	◎	◎	B
FLV-DB10181B	Blue	8	160	○	◎	B
FLV-DB130130W	White	15.2	270	×	◎	C
FLV-DB130130R	Red	10.1	270	○	◎	C
FLV-DB130130B	Blue	15.2	270	×	◎	C
FLV-DB212152W	White	28.8	510	×	◎	D
FLV-DB212152R	Red	17.3	510	×	◎	D
FLV-DB212152B	Blue	28.8	510	×	◎	D

✻: The table shows whether each Lighting can be connected to Lighting Controllers. When multiple Lightings are connected to a Lighting Controller, make sure that the total electricity of all connected Lightings does not exceed the electricity of connectable lighting of each Lighting Controller.
◎: Connectable. Light can be continuously emitted.
○: Connectable. Light can be emitted only while the trigger is input.
×: Not connectable

Dimensions

A FLV-DB3729□

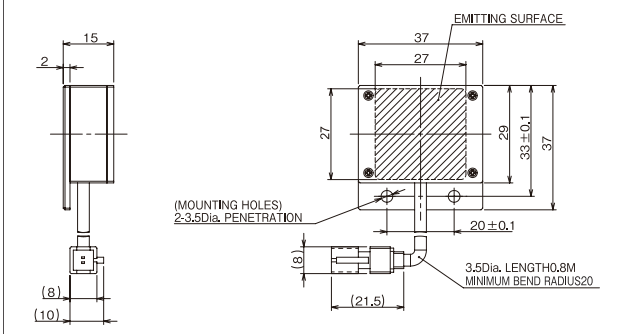

B FLV-DB10181□

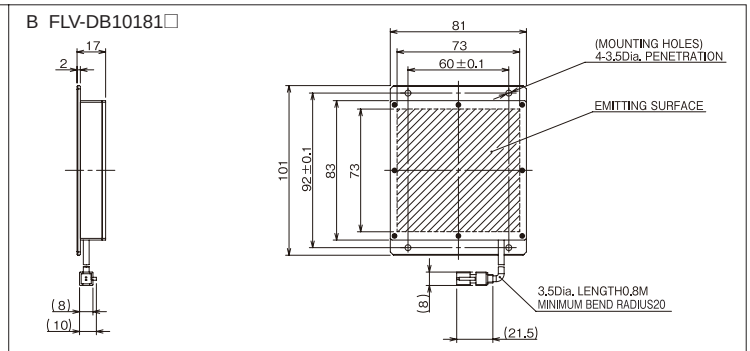

C FLV-DB130130□

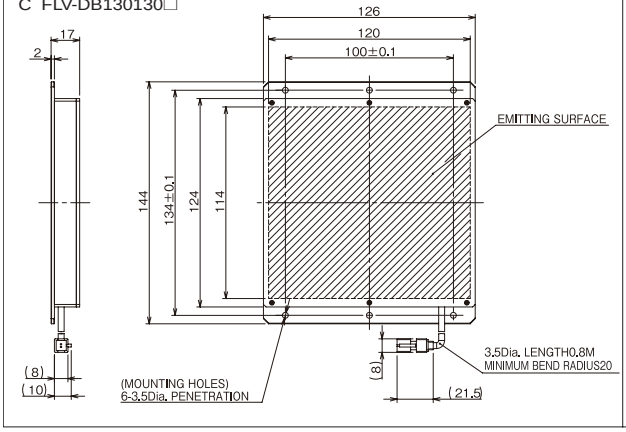

D FLV-DB212152□

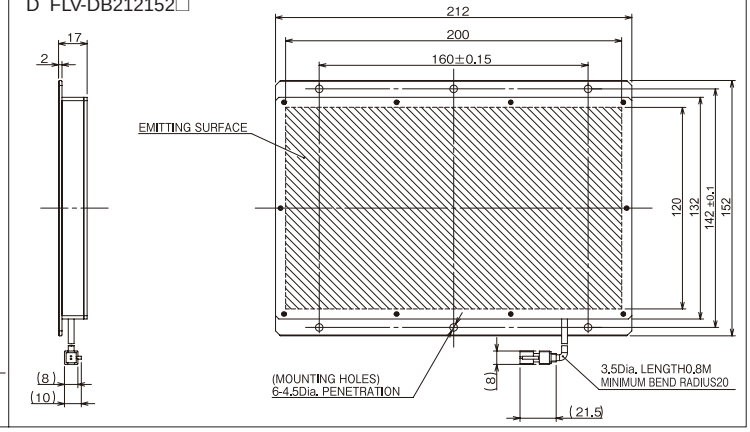

Edge Type Lighting
FLV-FB Series

Order Information

Model	Light Color	Electricity (W)	Weight (g)	Connectable Lighting Controller ✻		Dimensions
				Camera-mount Lighting Controller FLV-TCC Series	Analog Lighting Controller FLV-ATC Series	
FLV-FB5050W	White	1.8	80	◎	◎	A
FLV-FB5050R	Red	0.9	80	◎	◎	A
FLV-FB5050B	Blue	1.8	80	◎	◎	A
FLV-FB7070W	White	1.8	90	◎	◎	B
FLV-FB7070R	Red	1.8	90	◎	◎	B
FLV-FB7070B	Blue	1.8	90	◎	◎	B
FLV-FB9090W	White	3.4	160	◎	◎	C
FLV-FB9090R	Red	1.8	160	◎	◎	C
FLV-FB9090B	Blue	3.4	160	◎	◎	C
FLV-FB130130W	White	5.3	230	◎	◎	D
FLV-FB130130R	Red	2.7	230	◎	◎	D
FLV-FB130130B	Blue	5.3	230	◎	◎	D
FLV-FB200200W	White	6.8	710	◎	◎	E
FLV-FB200200R	Red	5.1	710	◎	◎	E
FLV-FB200200B	Blue	6.8	710	◎	◎	E

✻: The table shows whether each Lighting can be connected to Lighting Controllers. When multiple Lightings are connected to a Lighting Controller, make sure that the total electricity of all connected Lightings does not exceed the electricity of connectable lighting of each Lighting Controller.
◎: Connectable. Light can be continuously emitted. ○: Connectable. Light can be emitted only while the trigger is input. ✕: Not connectable

Dimensions

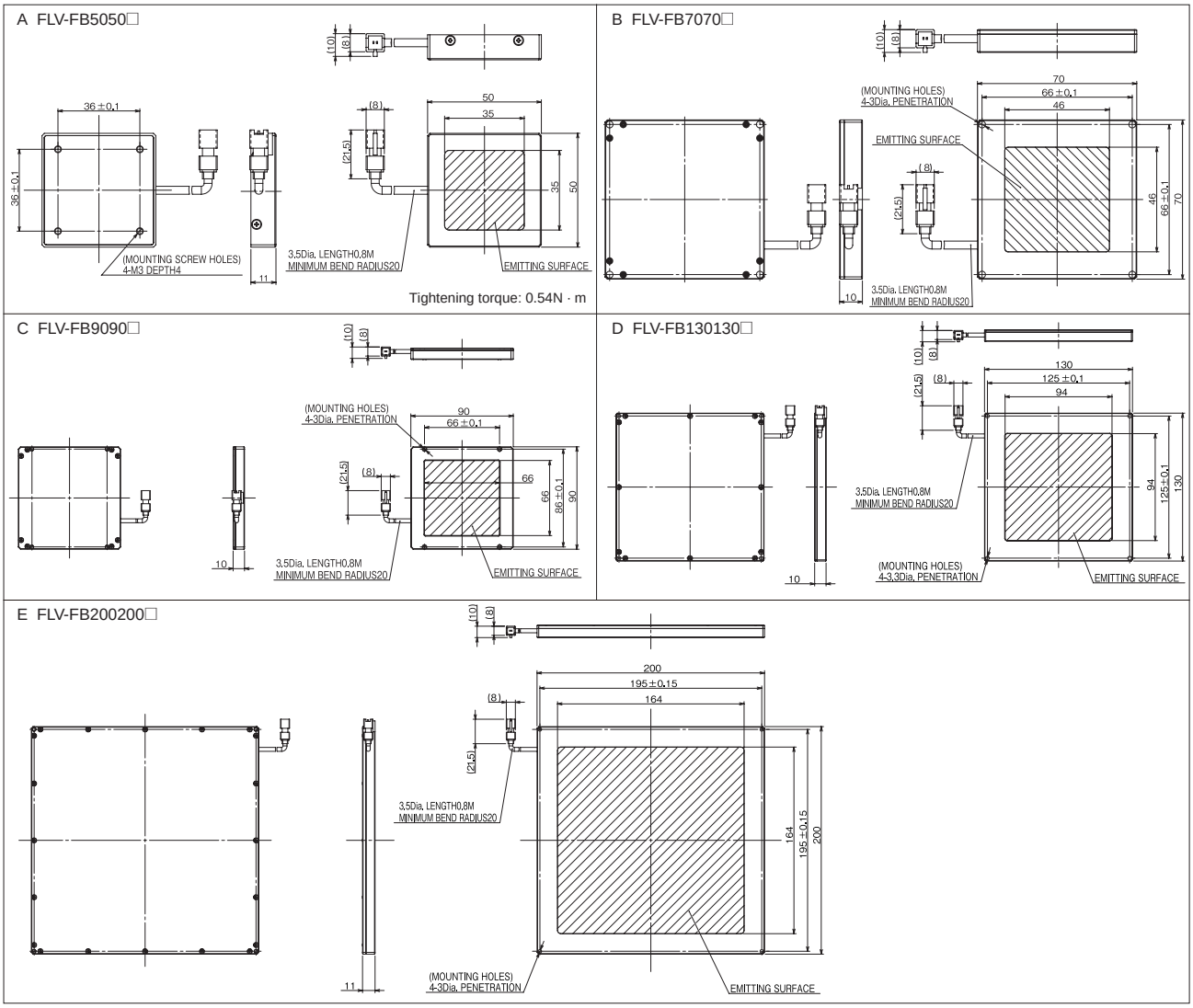

OMRON

Edge Type Coaxial Lighting
FLV-FX Series

Order Information

Model	Light Color	Electricity (W)	Weight (g)	Connectable Lighting Controller ✻		Dimensions
				Camera-mount Lighting Controller FLV-TCC Series	Analog Lighting Controller FLV-ATC Series	
FLV-FX100W	White	3.9	180	◎	◎	A
FLV-FX100R	Red	2	180	◎	◎	A
FLV-FX100B	Blue	3.9	180	◎	◎	A
FLV-FX143W	White	5.3	240	◎	◎	B
FLV-FX143R	Red	3.9	240	◎	◎	B
FLV-FX143B	Blue	5.3	240	◎	◎	B

✻: The table shows whether each Lighting can be connected to Lighting Controllers. When multiple Lightings are connected to a Lighting Controller, make sure that the total electricity of all connected Lightings does not exceed the electricity of connectable lighting of each Lighting Controller.
◎: Connectable. Light can be continuously emitted.
◯: Connectable. Light can be emitted only while the trigger is input.
×: Not connectable

Dimensions

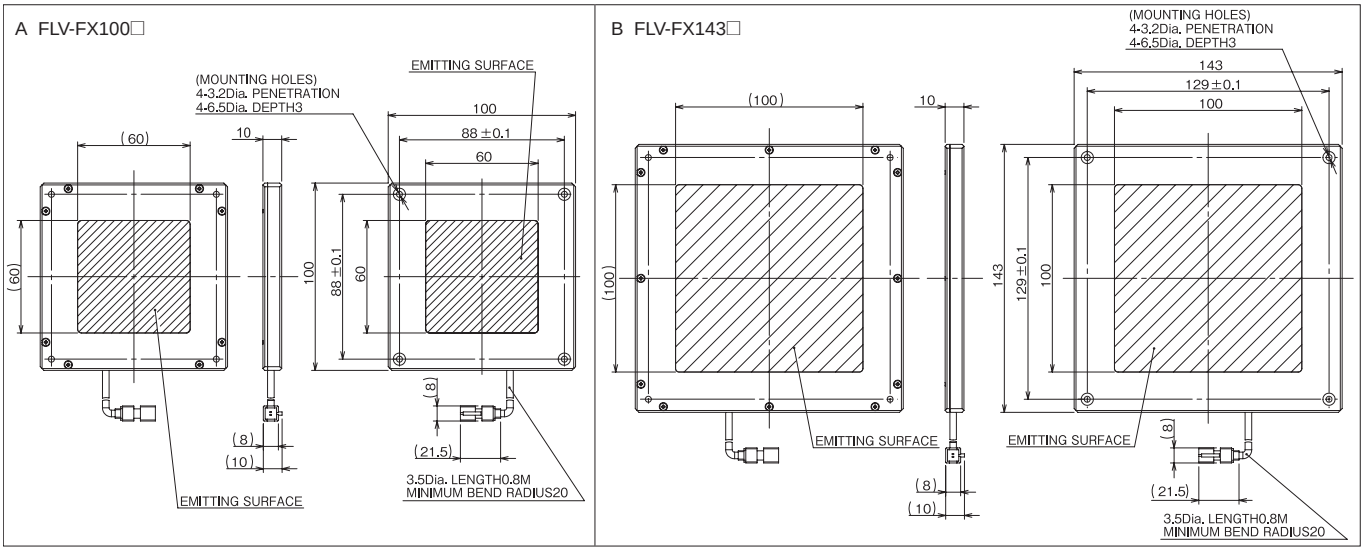

Dome Lighting
FLV-DD Series

Order Information

Model	Light Color	Electricity (W)	Weight (g)	Connectable Lighting Controller ✻		Dimensions
				Camera-mount Lighting Controller FLV-TCC Series	Analog Lighting Controller FLV-ATC Series	
FLV-DD70W	White	2	130	◎	◎	A
FLV-DD70R	Red	2	130	◎	◎	A
FLV-DD70B	Blue	2	130	◎	◎	A
FLV-DD100W	White	14.4	210	○	◎	B
FLV-DD100R	Red	9.6	210	○	◎	B
FLV-DD100B	Blue	14.4	210	○	◎	B
FLV-DD150W	White	14.4	490	○	◎	C
FLV-DD150R	Red	9.6	490	○	◎	C
FLV-DD150B	Blue	14.4	490	○	◎	C

✻: The table shows whether each Lighting can be connected to Lighting Controllers. When multiple Lightings are connected to a Lighting Controller, make sure that the total electricity of all connected Lightings does not exceed the electricity of connectable lighting of each Lighting Controller.
◎: Connectable. Light can be continuously emitted.
○: Connectable. Light can be emitted only while the trigger is input.
×: Not connectable

Dimensions

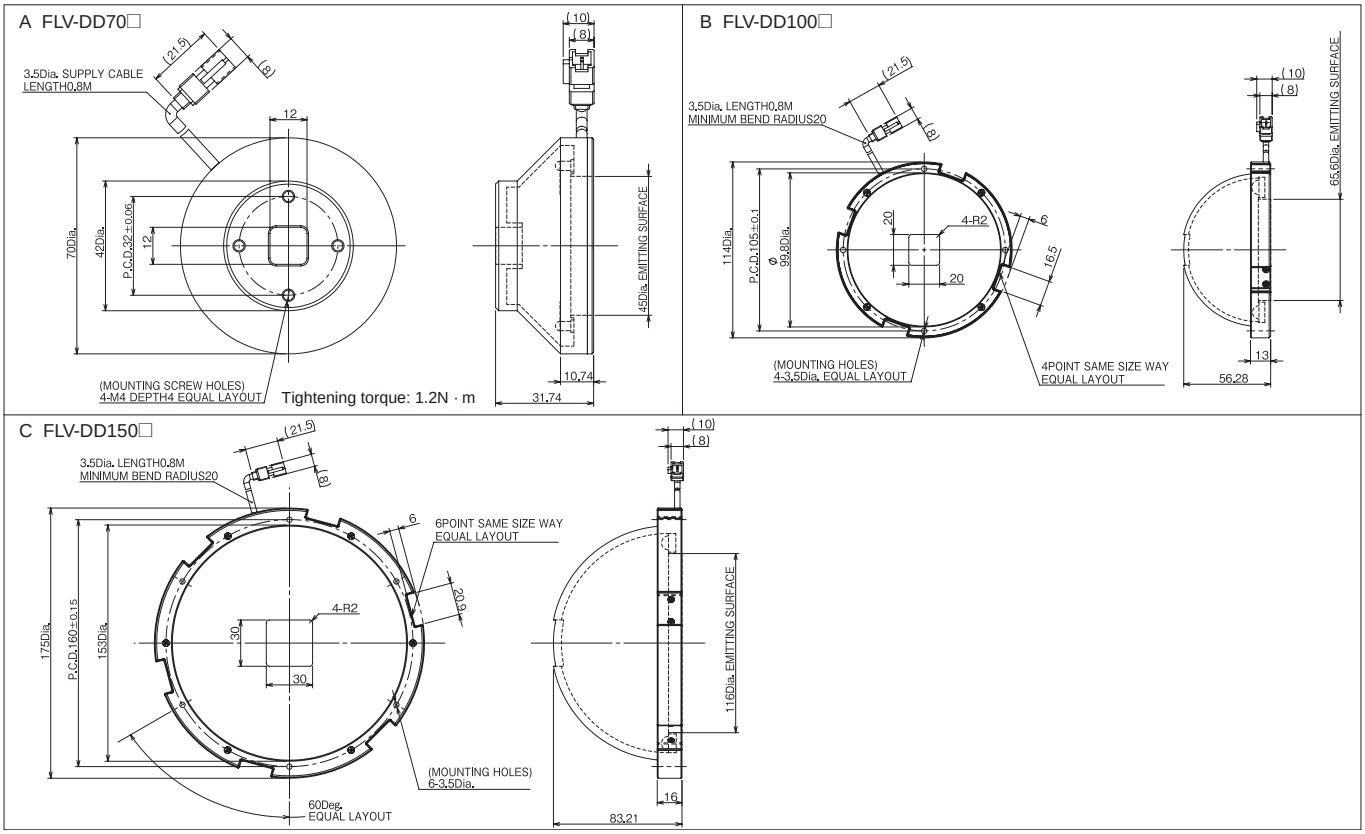

High-power Spot Lighting

FLV-EP08 Series

Order Information

Model	Light Color	Electricity (W)	Weight (g)	Connectable Lighting Controller ✻		Dimensions
				Camera-mount Lighting Controller FLV-TCC Series	Analog Lighting Controller FLV-ATC Series	
FLV-EP0803W	White	2.3	80	×	◎	A
FLV-EP0803R	Red	2.3	80	×	◎	A
FLV-EP0803B	Blue	2.3	80	×	◎	A

✻: The table shows whether each Lighting can be connected to Lighting Controllers. When multiple Lightings are connected to a Lighting Controller, make sure that the total electricity of all connected Lightings does not exceed the electricity of connectable lighting of each Lighting Controller.
◎: Connectable. Light can be continuously emitted.
◯: Connectable. Light can be emitted only while the trigger is input.
×: Not connectable

Dimensions

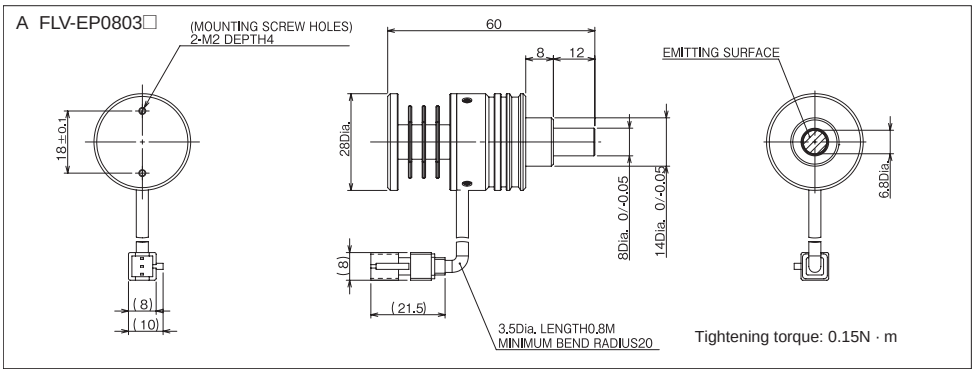

Spot Lighting

FLV-EP50 Series

Order Information

Model	Light Color	Electricity (W)	Weight (g)	Connectable Lighting Controller ✻		Dimensions
				Camera-mount Lighting Controller FLV-TCC Series	Analog Lighting Controller FLV-ATC Series	
FLV-EP50W	White	2.3	200	×	◎	A
FLV-EP50R	Red	2.3	200	×	◎	A

✻: The table shows whether each Lighting can be connected to Lighting Controllers. When multiple Lightings are connected to a Lighting Controller, make sure that the total electricity of all connected Lightings does not exceed the electricity of connectable lighting of each Lighting Controller.
◎: Connectable. Light can be continuously emitted.
○: Connectable. Light can be emitted only while the trigger is input.
×: Not connectable

Dimensions

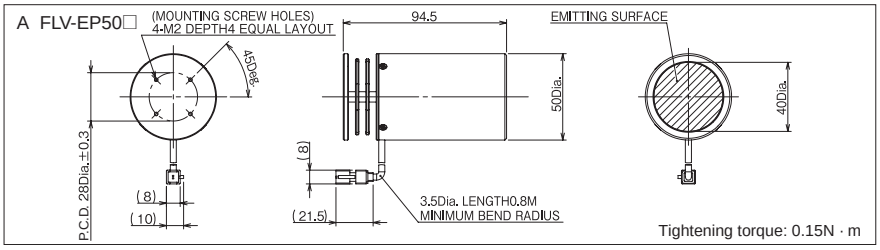

Camera-mount Lighting Controller for FLV Series

FLV-TCC Series

Camera-mount Compact Lighting Controller to Perform Multistage Control with up to 4 Lightings

Product features

- Compact design helps save space in the control panel.
- Lighting intensity can be maintained even with long wiring distances.
- No complicated wiring to the Vision Sensor is required.

<Standard Lighting System>

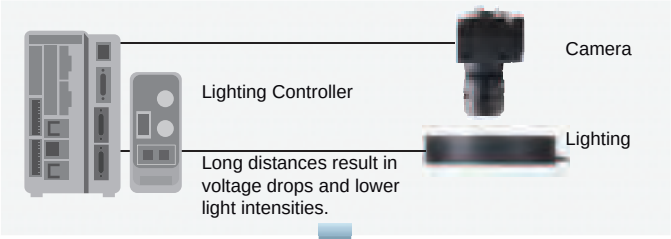

<FLV Series>

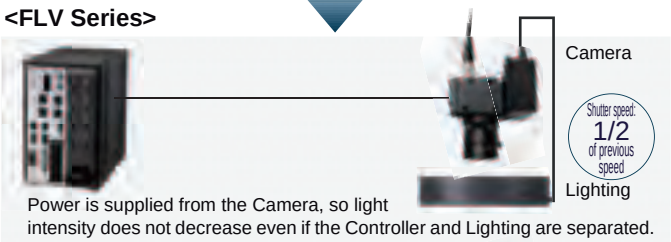

Order Information

Model	Number of Connectable Lightings	Applicable Lighting		Power Supply Voltage	Electricity of Connectable Lighting	Luminance Control Method
		Standard Lighting FLV Series ✻1	Spot Lighting FLV-EP Series			
FLV-TCC1	1ch	○	-	24 VDC ✻2	15W max.	Digital ✻3
FLV-TCC4	4ch	○	-			

✻1. Standard lighting is all FLV-series Lightings excluding the FLV-EP-series Spot Lightings.
✻2. If the total power consumption of Lightings is 7.5 W or less, an external power supply is not required because the power is supplied from the Camera.
✻3. Luminance can be controlled by setting from the Vision Sensor Controller.

Camera-mount Lighting Controller for FLV Series FLV-TCC Series

Specification

Item / Model	FLV-TCC1	FLV-TCC4
Number of connectable lightings	1	4
Applicable Lighting	FLV series (However, FLV-EP series is excluded.)	
Applicable Cameras	FH-S series, FZ-S series	
Applicable Image Sensor Controller	FH series, FZ5 series	
Input Voltage	Supplied from applicable camera (13 V) or external power supply (24 V)	
External power supply voltage	24 VDC ± 10% (including ripple)	
Recommended power supply	Model S8VS-06024 (manufactured by OMRON, 24 VDC, 2.5 A, 60 W)	
Connectable lighting		
13 VDC for camera supply		
Continuous lighting	7.5 W max.	4ch total 7.5 W max.
Trigger lighting / Simultaneous lighting	7.5 W max.	4ch total 7.5 W max.
Trigger lighting / Individual lighting		7.5 W max. for 1ch
24 VDC for external supply		
Continuous lighting	7.5 W max.	4ch total 7.5 W max.
Trigger lighting / Simultaneous lighting	No duty restriction: 7.5 W max. Duty by 50%: 15 W max.	No duty restriction: 4ch total 7.5 W max. Duty by 50%: 4ch total 15 W max.
Trigger lighting / Individual lighting		No duty restriction: 7.5 W max. for 1ch Duty by 50%: 15 W max. for 1ch
Drive method	Contrast voltage method	
Lighting method	Trigger lighting, Continuous lighting	
Luminance Control Method	Duty light adjustment or voltage light adjustment Duty light adjustment: PWM frequency of 100 kHz, light adjustment of 255 levels Voltage light adjustment: Light adjustment of 255 levels (all are set with image sensor controller)	
Trigger lighting	Lighting in synchronization with trigger input timing from the controller. (auto setting in accordance with shutter speed)	
Trigger lighting delay time	Ton: 30 µs max.	
Lighting duration setting	Synchronized with the shutter speed of the camera (when the trigger is illuminated)	
Lighting time control	Set with image sensor controller, or synchronized with shutter speed	
External Interface	Camera connection cable (directly connected with the main unit)	
Insulation Resistance	0.5 MΩ (100 VDC)	
Ambient Temperature	Operating: 0 to +50°C, Storage: -15 to +60°C (with no icing or condensation)	
Ambient Humidity	Operating and storage: 35% to 85% (with no condensation)	
Degree of Protection	IP20 (IEC60529)	
Vibration Resistance (destructive)	10 to 150 Hz, (0.7 mm double amplitude) 80 min each in X, Y, and Z directions	
Shock Resistance (destructive)	150 m/s² 3 times each in 6 directions (up/down, left/right, forward/backward)	
Materials	Case: Aluminum, Cable: PVC	
Weight	Approx: 120 g (including the camera mount plate)	Approx. 130 g (including the camera mount plate)
Accessories	Instruction manual, Camera Mount plate, mounting screws (M2 set screw × 4, M2 flat head screw × 4, M4 flat head screw × 4)	

Part Names and Functions

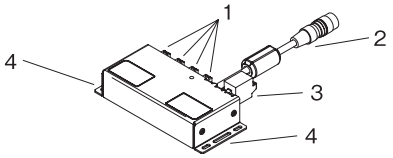

No.	Name	Description
1	Lighting connecting connector	Connects the LED lighting.
2	Camera connecting cable	Connects to the extension connector of the camera.
3	24 V external power supply input terminal block	Connects the 24 VDC power supply.
4	Mounting hole for fixing screw	Holes to mount the screws to secure the Lighting Controller to a mounting plate or device.

Mounting the Controller to the Camera

The Lighting Controller can be mounted to the Camera using the provided Camera Mount plate. Mounting directions are: (1) Upper mount, (2) Right side mount, (3) Left side mount.

(1) Top/Bottom mount (2) Right side mount (3) Left side mount

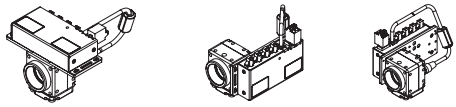

Dimensions

●Lighting Controller

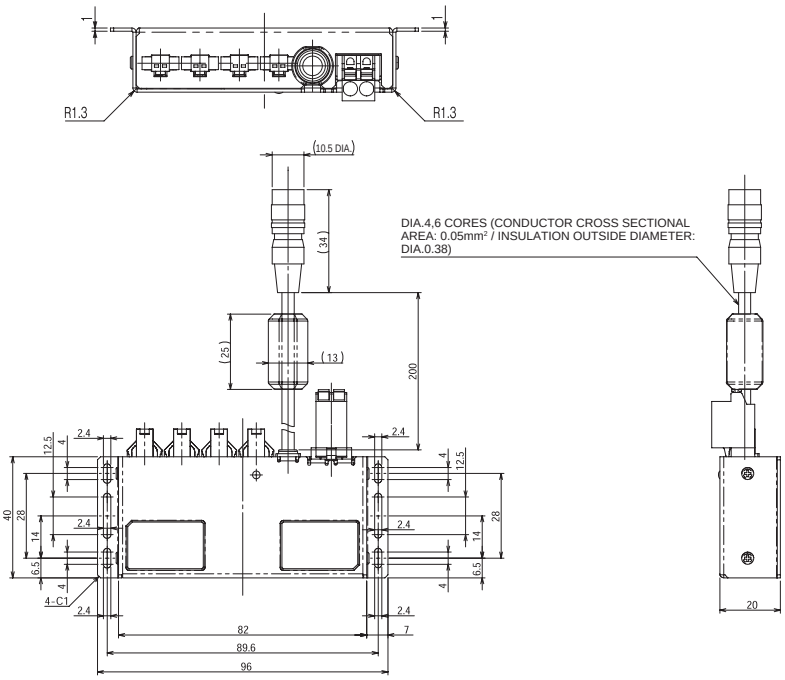

●Camera mount plate (provided)

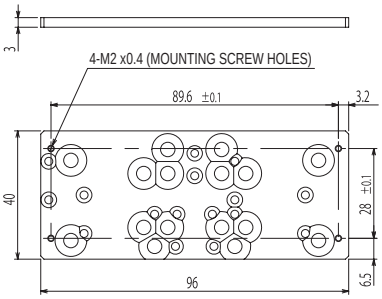

Analog Lighting Controller for FLV Series

FLV-ATC Series

Stationary Lighting Controller

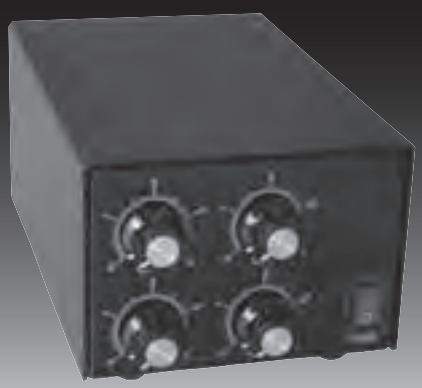

Product features

- Suitable for small installation space near the Camera
- Light emission trigger can be input directly even without Omron's Vision Sensor.

Order Information

Applicable Lighting	Model ✻2	Number of Connectable Lightings	Power Supply Voltage	Electricity of Connectable Lighting	Luminance Control Method
Standard Lighting ✻1	**FLV-ATC21024**	2ch	100 to 240 VAC	40W max.	Analog
	FLV-ATC41024	4ch			
For Spot Lighting	**FLV-ATC10405**	1ch		3W max.	
	FLV-ATC40405	4ch		12W max.	

✻1. Standard lighting is all FLV-series Lightings excluding the FLV-EP-series Spot Lightings.
✻2. The standard plug is A type. C, B, B3, SE, BF, and O types are also available. (The suffix "-C", "-B", "-B3", "-SE", "-BF", or "-O" is added to the model name.)

●Standard Lighting FLV-ATC21024/-ATC41024

Parts Names and Functions

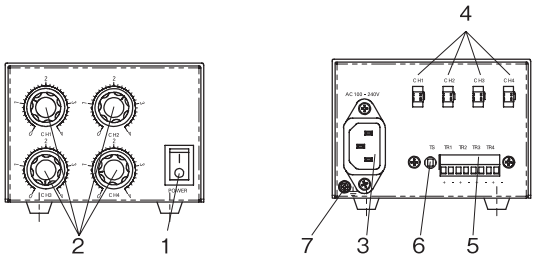

No.	Name	Description
1	Main power supply	Starts up the Controller when it is turned ON.
2	Lighting adjustment volume	Rotating the volume clockwise increases the emission intensity or counterclockwise decreases it.
3	AC power supply input connector	A terminal to supply AC power. Connect the provided AC input cable.
4	Lighting connector	Connects an LED lighting.
5	Terminal block for trigger input	A terminal block for lighting illumination trigger input from outside to each lighting.
6	Lighting mode switching button	Illumination mode switch button is ON (The button is pushed.): Short-circuiting (+) and (-) of TR1 to TR4 respectively makes the trigger input status ON, turning the light ON. Releasing (+) and (-) makes the status OFF, turning the light OFF.
		Illumination mode switch button is OFF (The button is not pushed.): Short-circuit (+) and (-) of TR1 to TR4 respectively makes the trigger input status OFF, turning the light OFF. Releasing (+) and (-) makes the status OFF, turning the light ON.
7	Frame ground terminal	A terminal for frame ground. Connect the ground line.

Specifications

Item / Model	FLV-ATC21024-□	FLV-ATC41024-□
Number of connectable lightings	1	4
Applicable lighting	FLV series (However, FLV-EP series is excluded.)	
Power supply voltage	100 to 240 VAC	
Electricity of connectable lighting	2ch total 40 W max. 30 W max. for 1ch	4ch total 40 W max. 30 W max. for 1ch
Drive method	Constant voltage method	
Lighting method	Trigger lighting, Continuous lighting	
Luminance control method	Voltage light adjustment: 14.0 to 24.0 V	
Trigger lighting	Lighting in synchronization with input from the trigger input terminal	
Trigger lighting delay time	Ton: 100 µs max.	
External interface	Trigger input terminal block	
Dielectric strength	AC 1500 V 50/60 Hz 1 min	
Insulation resistance	20 MΩ (500 VDC)	
Ambient temperature	Operating: 0 to +50°C, Storage: -15 to +60°C (with no icing or condensation)	
Ambient humidity	Operating/storage: 35% to 85% (with no condensation)	
Degree of protection	IP20 (IEC60529)	
Vibration resistance (destructive)	10 to 150 Hz, (0.2 mm double amplitude) 80 min each in X, Y, and Z directions	
Shock resistance (destructive)	150 m/s^2 3 times each in 6 directions (up/down, left/right, forward/backward)	
Materials	Case: Aluminum	
Weight	Approx. 800 g	
Accessories	Instruction manual, AC input cable ✻1	

✻1: The suffixed symbol of the model name means the plug shape of the accessory cable. A model name with no suffix means type A.

Connection with external trigger input terminal block

- Connection of this terminal block is not required if external lighting issuance trigger is not used.

<Connection of trigger input terminal block>

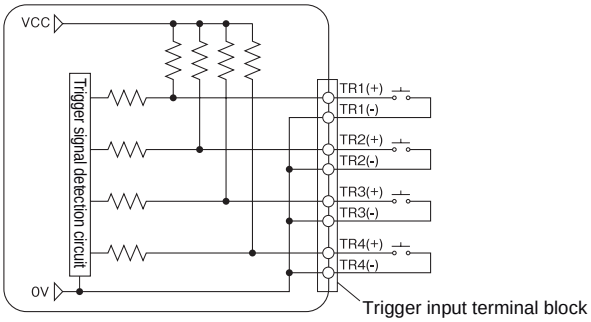

✻ Current flowing through the short circuit is less than 2 mA.

●FLV-ATC21024-□

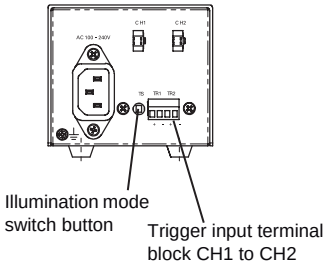

● FLV-ATC41024-□

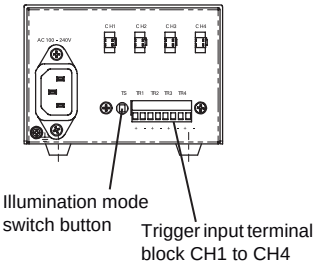

Illumination mode switch button is ON (The button is pushed.)

Short-circuiting (+) and (-) of TR1 to TR4 respectively makes the trigger input status ON, turning the light ON. Releasing (+) and (-) makes the status OFF, turning the light OFF.

Illumination mode switch button is OFF (The button is not pushed.)

Short-circuit (+) and (-) of TR1 to TR4 respectively makes the trigger input status OFF, turning the light OFF. Releasing (+) and (-) makes the status ON, turning the light ON.

[Important]

- Make sure that excessive force is not imposed on the wire and terminal block.
- Do not install the product in which loads are constantly applied to the terminal block such as the wire being under tension.
- When wiring the terminal block, use an applicable cable (AWG 14 to 24, tip processing length: 7 mm).

Analog Lighting Controller for FLV Series FLV-ATC Series

Dimensions (Unit: mm)

●FLV-ATC21024-□

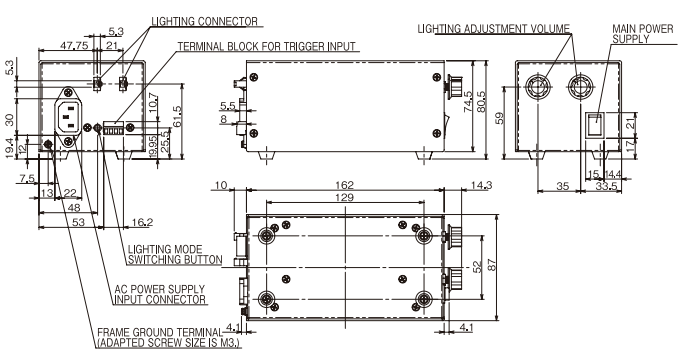

●FLV-ATC41024-□

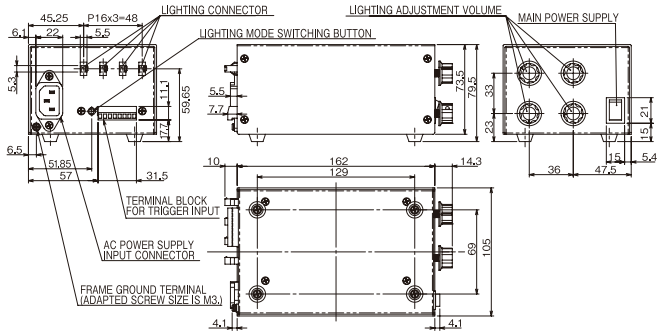

●For Spot Lighting FLV-ATC10405/-ATC40405

Parts Names and Functions

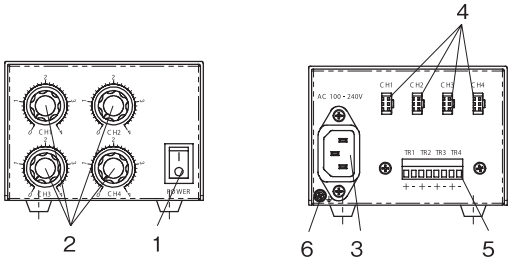

No.	Name	Description
1	Main power supply	Starts up the Controller when it is turned ON.
2	Lighting adjustment volume	Rotating the volume clockwise increases the emission intensity or counterclockwise decreases it.
3	AC power supply input connector	A terminal to supply AC power. Connect the provided AC input cable.
4	Lighting connector	Connects an LED lighting.
5	Terminal block for trigger input	A terminal block for lighting illumination trigger input from outside to each lighting.
6	Frame ground terminal	A terminal for frame ground. Connect the ground line.

Specifications

ItemModel	FLV-ATC10405-□	FLV-ATC40405-□
Number of connectable lightings	1	4
Applicable lighting	FLV-EP series	
Power supply voltage	100 to 240 VAC	
Electricity of connectable lighting	3 W max.	4ch total 12 W max. 3 W max. for 1ch
Drive method	Constant current method	
Lighting method	Trigger lighting, Continuous lighting	
Luminance control method	Current light adjustment ~0.4 A	
Trigger lighting	Turning the light off in synchronization with input from the trigger input terminal	
Trigger lighting delay time	Ton: 100 µs max.	
External interface	Trigger input terminal block	
Dielectric strength	AC 1500 V 50/60 Hz 1 min	
Insulation resistance	20 MΩ (500 VDC)	
Ambient temperature	Operating: 0 to +50°C, Storage: -15 to +60°C (with no icing or condensation)	
Ambient humidity	Operating/storage: 35% to 85% (with no condensation)	
Degree of protection	IP20 (IEC60529)	
Vibration resistance (destructive)	10 to 150 Hz, (0.2 mm double amplitude) 80 min each in X, Y, and Z directions	
Shock resistance (destructive)	150 m/s² 3 times each in 6 directions (up/down, left/right, forward/backward)	
Materials	Case: Aluminum	
Weight	Approx. 800 g	
Accessories	Instruction manual, AC input cable ✻1	

✻1: The suffixed symbol of the model name means the plug shape of the accessory cable. A model name with no suffix means type A.

Connections with external trigger input terminal block

- Connection of this terminal block is not required if external lighting issuance trigger is not used.

<Connection of trigger input terminal block>

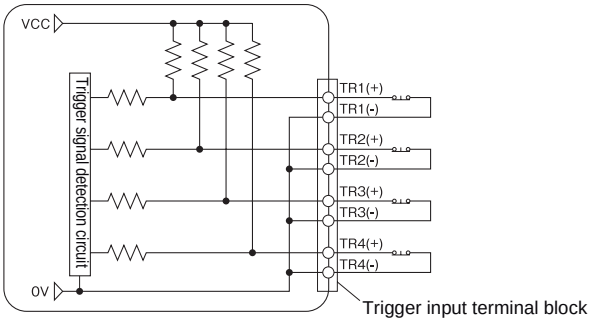

✻ Current flowing through the short circuit is less than 1 mA.

●FLV-ATC10405-□

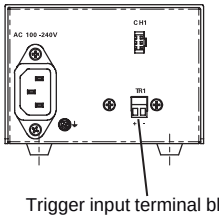

● FLV-ATC40405-□

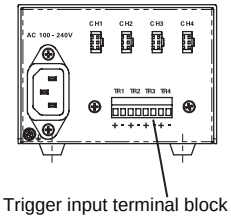

Short-circuiting (+) and (-) of TR1 to TR4 respectively makes the trigger input status OFF, turning the light OFF.
Releasing (+) and (-) makes the status ON, turning the light ON.

[Important]

- Make sure that excessive force is not imposed on the wire and terminal block.
- Do not install the product in which loads are constantly applied to the terminal block such as the wire being under tension.
- When wiring the terminal block, use an applicable cable (AWG 14 to 24, tip processing length: 7 mm).

Dimensions (Unit: mm)

●FLV-ATC10405-□

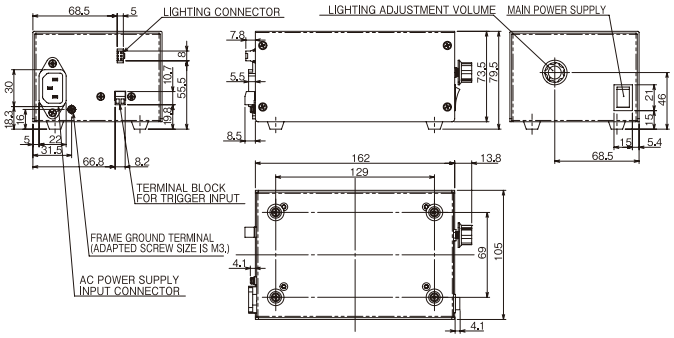

●FLV-ATC40405-□

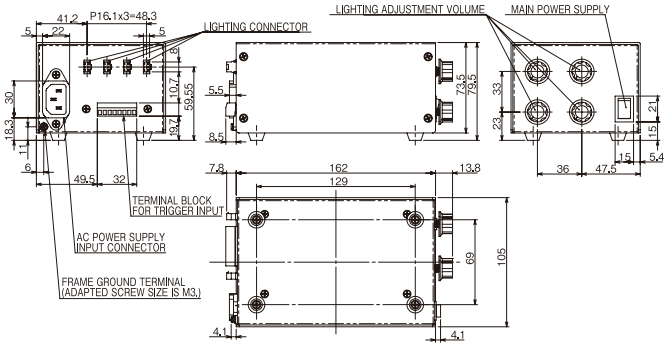

FL-BR Series

The highest level of brightness in the industry.
These Bar Lighting are structured for adaptable wiring and mounting.

Illumination Structure

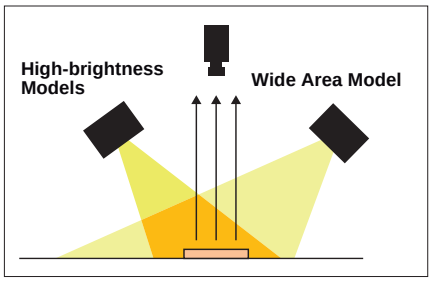

Lighting Intensity Distribution Characteristics

High-brightness Models (FL-BR9120W-H)

X axis (long axis)

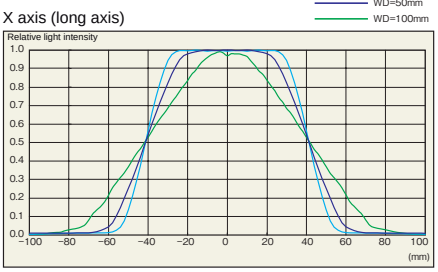

Y axis (short axis)

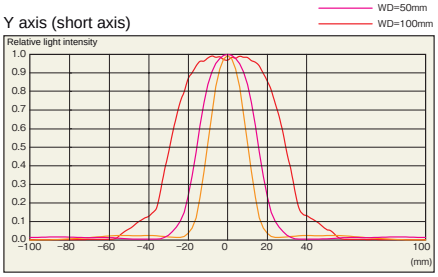

Wide Area Model (FL-BR9120W)

X axis (long axis)

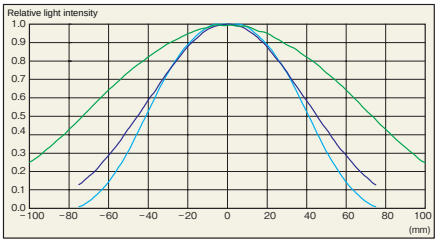

Y axis (short axis)

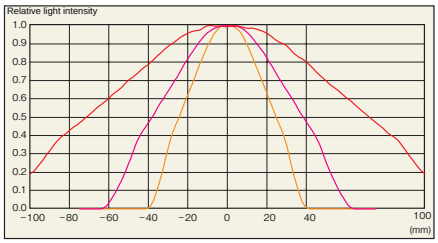

Application

Standard Lighitng

It is difficult to read characters with low contrast.

FL Series

Sharp images are created of both two-dimensional codes and characters.

Order Information

Standard Models	Model	Light color
Wide Area Model	**FL-BR5020W**	White LEDs
High-brightness Models	**FL-BR5020W-H**	
Wide Area Model	**FL-BR9120W**	
High-brightness Models	**FL-BR9120W-H**	
Wide Area Model	**FL-BR13120W**	
High-brightness Models	**FL-BR13120W-H**	

Ratings and Specifications

Model	Wide Area Model	High-brightness Models	Wide Area Model	High-brightness Models	Wide Area Model	High-brightness Models
	FL-BR5020W	FL-BR5020W-H	FL-BR9120W	FL-BR9120W-H	FL-BR13120W	FL-BR13120W-H
Light source	White LEDs					
Vibration resistance	10 to 150 Hz (Double amplitude: 0.7 mm), 80 min each in X, Y, and Z directions					
Shock resistance	150 m/s² 3 times each in 6 directions					
Ambient temperature	Operation: 0 to 40°C, Storage: -15 to 60°C (with no icing or condensation)					
Ambient humidity	Operation or storage: 35% to 85% (with no condensation)					
Ambient atmosphere	No corrosive gases.					
Degree of protection	IEC60259 IP20					
Weight	Approx. 40g		Approx. 70g		Approx. 100g	
Materials	Light: Case: Aluminum; Cover, side parts, and lens: Heat resistant polyvinyl chloride; Connector: Thermoplastic resin with glass					
LED Class	Class2 (JIS C 6802:2005)					
Accessories	Instruction manual					

The color of white LEDs can vary due to intrinsic characteristics.
Confirm suitability for the application in advance.

Dimensions (Unit: mm)

FL-BR5020W(-H)

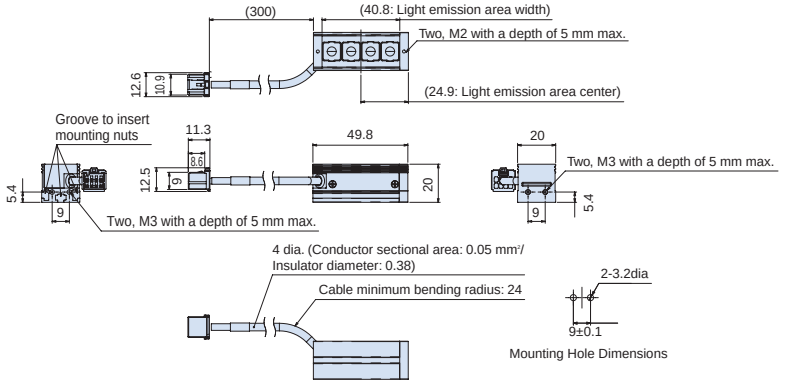

FL-BR9120W(-H)

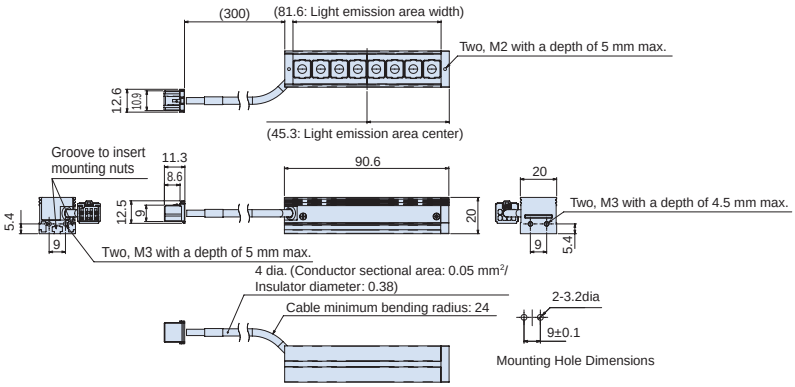

FL-BR13120W(-H)

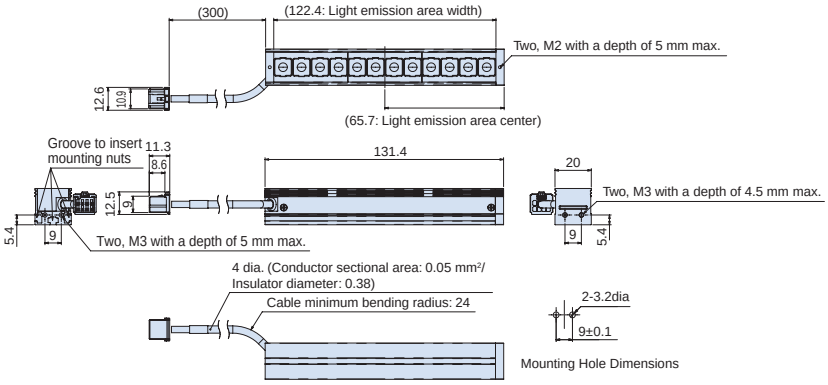

FL-DR Series

Clear Images WITH Industry's Top Level of Brightness and a Illumination over a Wide Field of View

Illumination Structure

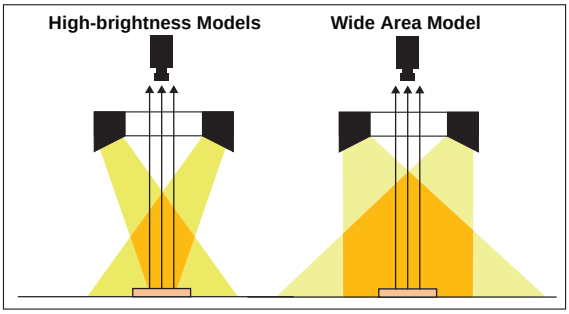

Lighting Intensity Distribution Characteristics

High-brightness Models (FL-DR50W-H)

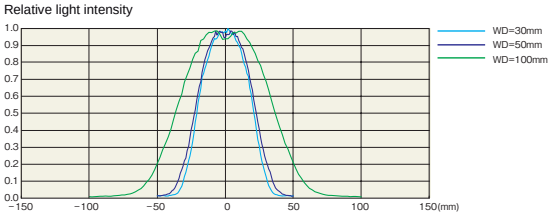

Wide Area Model (FL-DR50W)

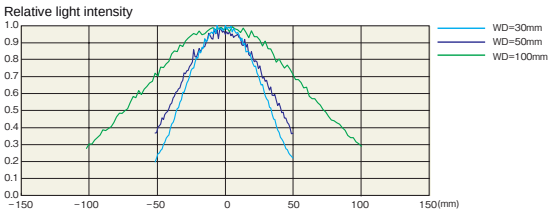

Application

Standard Lighitng

Faster lines make it necessary to increase shutter speeds, but then the clarity of workpiece images decreases.

FL series

More than sufficient brightness is provided for high-speed lines.

Order Information

Standard Models	Model	Light color
Wide Area Model	**FL-DR32W**	White LEDs
High-brightness Models	**FL-DR32W-H**	
Wide Area Model	**FL-DR50W**	
High-brightness Models	**FL-DR50W-H**	
Wide Area Model	**FL-DR90W**	
High-brightness Models	**FL-DR90W-H**	

Ratings and Specifications

Model	Wide Area Model	High-brightness Models	Wide Area Model	High-brightness Models	Wide Area Model	High-brightness Models
	FL-DR32W	FL-DR32W-H	FL-DR50W	FL-DR50W-H	FL-DR90W	FL-DR90W-H
Light source	White LEDs					
Vibration resistance	10 to 150 Hz (Double amplitude: 0.7 mm), 80 min each in X, Y, and Z directions					
Shock resistance	150 m/s² 3 times each in 6 directions					
Ambient temperature	Operation: 0 to 40°C, Storage: -15 to 60°C (with no icing or condensation)					
Ambient humidity	Operation or storage: 35% to 85% (with no condensation)					
Ambient atmosphere	No corrosive gases.					
Degree of protection	IEC60259 IP20					
Weight	Approx. 25g		Approx. 30g		Approx. 70g	Approx. 80g
Materials	Light: Case: Aluminum; Cover, side parts, and lens: Heat resistant polyvinyl chloride; Connector: Thermoplastic resin with glass					
LED Class	Class2 (JIS C 6802:2005)					
Accessories	Instruction manual					

The color of white LEDs can vary due to intrinsic characteristics.
Confirm suitability for the application in advance.

Dimensions (Unit: mm)

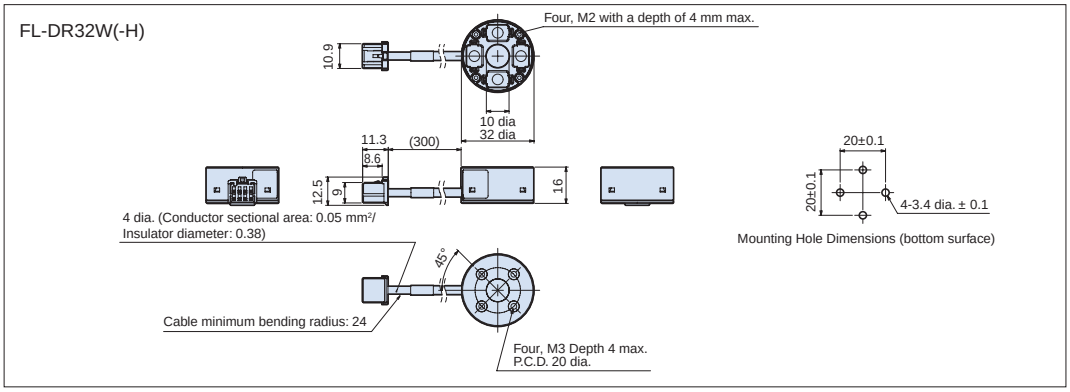

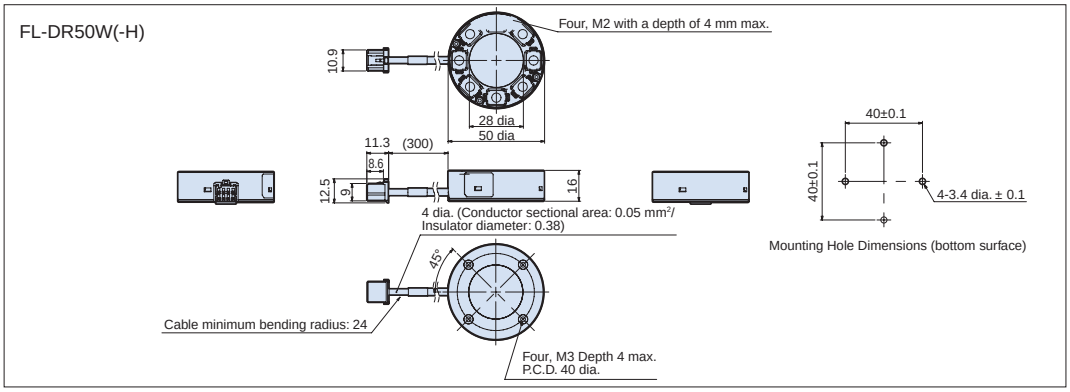

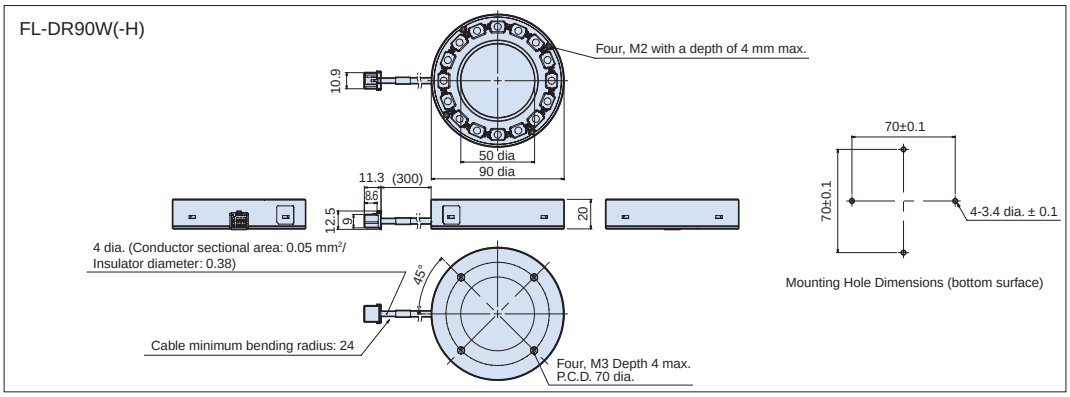

Stationary Lighting Controller

FL-STC Series

The smallest body in the industry is combined with the industry's longest cable at 25 m. Install in essentially any location.

Two-channel models

One-channel models

Product features

●Easy Control and Adjustment of the Lighting

With a compact design small enough to fit in the palm of your hand, the Controller can be built into the control panel or in the gap between production lines.

By using the longest lighting cable in the industry (25 m), the Controller can be installed along with the image processing monitor in a variety of locations. It is possible to adjust the lighting while looking at the screen.

Connect to a Remote Control Panel

Mount to a DIN Rail underneath the Line or in the Gap between Tables

Lighting Control without Programming

This enables light emission synchronized with the camera using essentially any trigger, such as a photoelectric sensor. The Controller be connected to an image processing device to control lighting without any programming on a PLC.

[Control Output]
- PNP/NPN compatible
- Power source: 24 V

[Lighting Emission Controls]
- Lighting triggers can be used individually for each channel.
- Lighting delay and lighting time can be controlled.

Intuitive Digital Light Controls

Digital adjustment of light emission makes it easy to reproduce the lighting environment after line switchovers.

The quantity of light is displayed digitally in 400 levels. Adjust the light in fine detail.

▲ Increases brightness

▼ Decreases brightness

Order Information

Standard Models	Model	I/O specifications	Input voltage
One-channel models	**FL-STC10**	NPN	24 VDC
	FL-STC15	PNP	
Two-channel models	**FL-STC20**	NPN	
	FL-STC25	PNP	

Ratings and Specifications

Product name		**One-channel models**		**Two-channel models**	
I/O type		**NPN**	**PNP**	**NPN**	**PNP**
Model		**FL-STC10**	**FL-STC15**	**FL-STC20**	**FL-STC25**
Power supply voltage		24 VDC±10% (including ripple)			
Power consumption		36 W, 1.5 A max. (including the lighting section)		72 W, 3 A max. (including the lighting section)	
Number of output channels		1		2	
Applicable lights		FL-□ Series ✻1			
Light control modes	**Continuous light emission mode**	While the Strobe Controller power source is ON, light is continuously emitted. PWM frequency: 100 kHz, Light adjustment: 400 levels			
	Triggered light emission mode	Light emission is synchronized with an external trigger input. Light emission: Continuous while the trigger is input, or 0.1 to 99.9 ms (set in 0.1-ms increments) PWM frequency: 100 kHz, Light adjustment: 400 levels			
	Strobe light emission mode	Light emission is synchronized with the external trigger input, but twice the amount of light is emitted in comparison with the trigger light emission mode. Light emission pulse width: 0.01 to 5 ms (light adjustment: 500 levels equivalent)			
Light adjustment setting	**Operation on the light**	Light adjustment mode settings and light adjustment value input: slide switch and directional pad			
	Remote operation	Light adjustment value input: 9-bit binary input			
External interface		Parallel I/O connector (D-sub 15-pin), Terminal block (external trigger input with 2 terminals, power source voltage input with 2 terminals)			
Ambient temperature		Operation: 0 to 40°C, Storage: -15 to 60°C (with no icing or condensation)			
Ambient humidity		Operation or storage: 35% to 85% (with no condensation)			
Vibration resistance		10 to 150 Hz (Double amplitude: 0.7mm), 80 min each in X, Y, and Z directions			
Shock resistance		150 m/s² 3 times each in 6 direction (up-down, left-right, front-back)			
Materials		Case: PC			
Degree of protection		IEC60529 IP20			
Weight		Approx. 100 g			
Accessories		Instruction manual,Terminal block Connector			

(✻1) Ask your OMRON representative for details on applicable models.

Dimensions (Unit: mm)

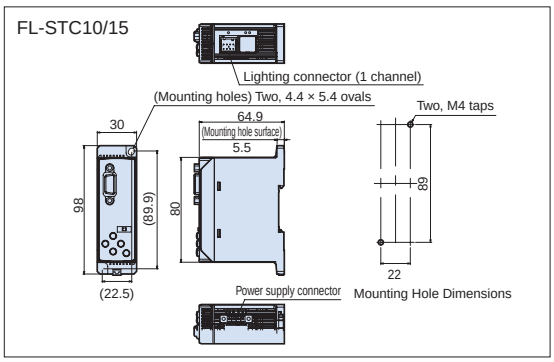

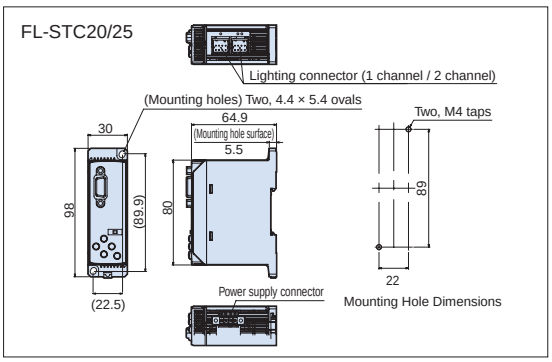

I/O Circuit Diagrams

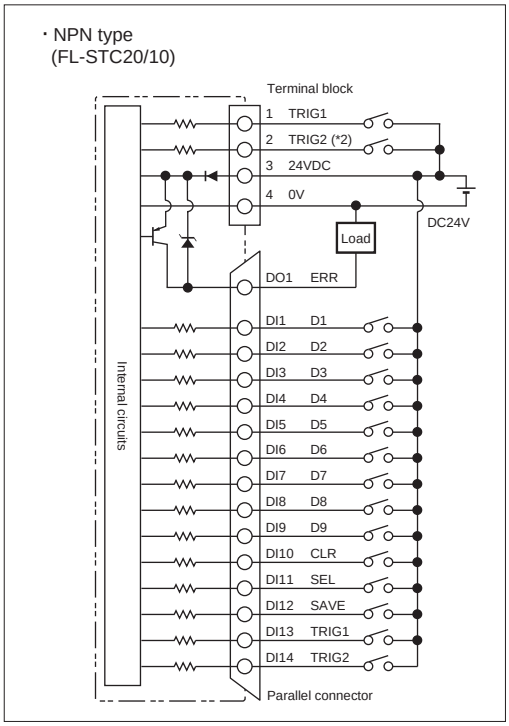

(*2) no use for FL-STC10

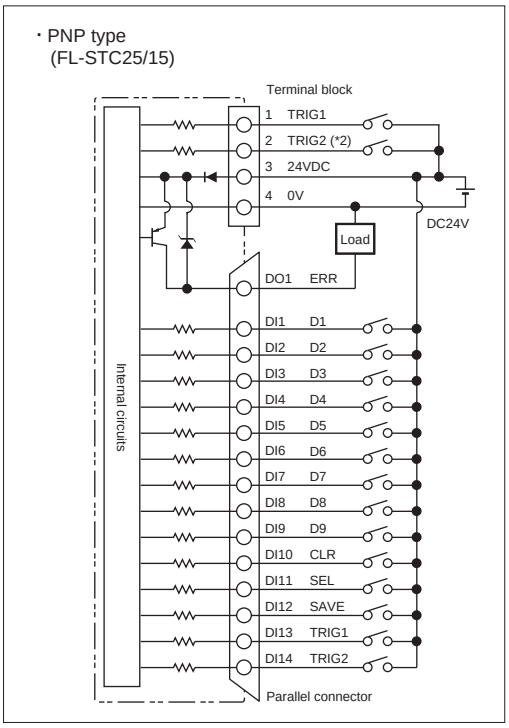

(*2) no use for FL-STC15

●Electrical Specifications

Output circuit	Input circuit
NPN Open-collector 30VDC 50mA max. ON: residual voltage 1.2V max. OFF: leakage current 0.1mA max.	ON: Connected to 0 V or 1.5 V max. OFF: Open (Leakage current: 0.1 mA max.)

●Electrical Specifications

Output circuit	Input circuit
PNP Open-collector 50mA max. ON: residual voltage 1.2V max. OFF: leakage current 0.1mA max.	ON: Connected to power supply voltage or power supply voltage -1.5 V max. OFF: Open (Leakage current: 0.1 mA max.)

Wiring diagram

Pin Arrangement

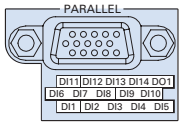

Pin No.	Signal	Signal direction	Function	
DI1	D1	Input	Bit 1 of light control data (least significant bit)	(1)CONT/TRIG Mode Light control data is specified using 9 bits of binary data from D1 to D9. The specifiable range is the 400 levels from 1 to 400 (binary 000000001 to 110010000). (2)STB Mode Strobe light emission data is specified in 9 bits of binary data from D1 to D9 The specifiable range is the 500 values from 0.01 to 5.00 ms (binary 000000001 to 111110100). Each bit is 1 for ON and 0 for OFF (open).
DI2	D2	Input	Bit 2 of light control data	
DI3	D3	Input	Bit 3 of light control data	
DI4	D4	Input	Bit 4 of light control data	
DI5	D5	Input	Bit 5 of light control data	
DI6	D6	Input	Bit 6 of light control data	
DI7	D7	Input	Bit 7 of light control data	
DI8	D8	Input	Bit 8 of light control data	
DI9	D9	Input	Bit 9 of light control data (most significant bit)	
DI10	CLR	Input	Error reset input. Errors are reset when the error reset input changes from OFF (open) to ON.	
DI11	SEL	Input	Lighting control channel selection input. OFF (open) specifies channel 1, ON specifies channel 2.	
DI12	SAVE	Input	The light control data (D1 to D9) is saved in the built-in memory when the input changes from OFF (open) to ON.	
DI13	TRIG1	Input	Inputs the light emission trigger signal for channel 1.	
DI14	TRIG2	Input	Inputs the light emission trigger signal for channel 2. (✻)	
DO1	ERR	output	Turns ON when an error occurs.	

✻ An input with the same function as the lighting emission trigger input is also available on the terminal block (pins 1 and 2). When using the trigger input, connect the input line only to the parallel connector or only to the terminal block.It is not possible to use both input lines at the same time.

Camera-mount Lighting Controller for FL Series

FL-TCC Series

Camera-mount Compact Lighting Controller Which Requires No Power Supply Nor Lighting Control

Product features

- No separate power supply is required because the power is supplied from the Camera.
- Light is emitted when a trigger signal is received from the Camera.
- Simple connection between the Camera and the Lighting with a single cable

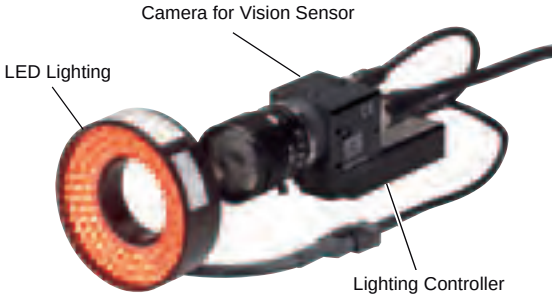

Order Information

Item	Model	Weight
Lighting Controller	**FL-TCC1**	Approx. 110 g
Camera Mounting Spacer	**FL-TCC1-XSP**	Approx. 10 g
Camera Mounting Attachment	**FL-TCC1-XAT**	Approx. 20 g

Ratings and Specifications

●Lighting Controller

Model		Lighting Controller
Model Name		FL-TCC1
Input Voltage		Supplied from compatible camera.
Compatible Cameras		FH-S/SC/S02/SC02/S04/SC04, FZ-S/SC/S2M/SC2M/S5M2/SC5M2/SH/SHC/SF/SFC/SP/SPC and others. (✻)
Compatible Controllers		FH Series, FZ5 Series, FZ4 Series, FZ3 Series (H900, H950, H700, H750, H300, H350, L350) and others. (✻)
Currant Consumption		MAX 10W, 0.9A (Lighting Included)
Lighting Channel		1
Applicable Lighting		FL-□ series
Luminance Control Method	Functions	PWM frequency: 100 KHz, Control step: 255 steps (configurable from the Controller)
	Trigger lighting	Lighting ON synchronized with trigger input timing from the Controller. (Auto setting in accordance with the shutter speed.)
	Trigger lighting delay time	Ton: 30 µs max. (Trigger ready µs) Toff: 10 µs max.
External Interface		Dedicated communication connector
Ambient Temperature		Operating: 0 to +50°C, Storage: -15 to +60°C (with no icing or condensation)
Ambient Humidity		Operating and storage: 35% to 85% (with no condensation)
Vibration resistance		10 to 55 Hz, (0.7mm double amplitude) 80 min each in X, Y, and Z directions
Shock resistance		150 m/s^2 3 times each in 6 directions (up/down, left/right, forward/backward)
Materials		Case: SECC, Cable: PVC
Degree of Protection		IP20 (IEC60529)
Weight		Approx. 110 g
Accessories		Instruction sheet, Insulation Sheet, Mounting screw (M2 × 6 mm) × 4

✻ Contact your OMRON sales representative for more information on model compatibility.

Dimensions (Unit: mm)

●Lighting Controller FL-TCC1

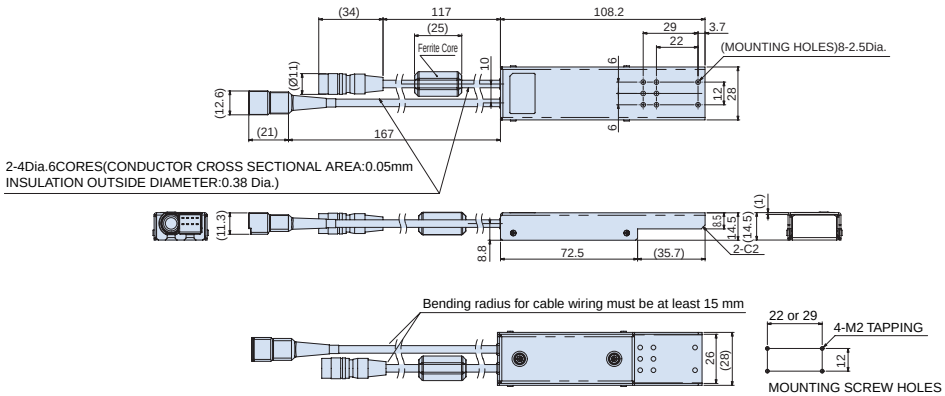

●Optional Products

Camera Mounting Spacer
FL-TCC1-XSP (sold separately)

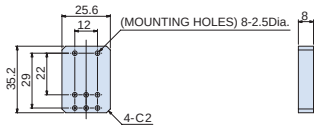

Camera Mounting Attachment
FL-TCC1-XAT (sold separately)

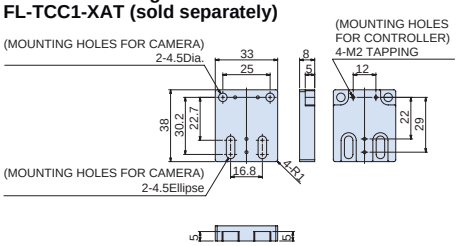

Cable/Diffusion Plates/Mounting Brackets

Cable

For FL series

Order Information

●Extension Cable, Standard Cables

Model	Cable Length	Weight
FL-XC1	1m	Approx. 50 g
FL-XC2	2m	Approx. 80 g
FL-XC3	3m	Approx. 120 g
FL-XC5	5m	Approx. 190 g
FL-XC10	10m	Approx. 400 g
FL-XC25	25m	Approx. 1000 g

●Extension Cables, Flexible Cables

Model	Cable Length	Weight
FL-XC1R	1m	Approx. 60 g
FL-XC2R	2m	Approx. 100 g
FL-XC3R	3m	Approx. 150 g
FL-XC5R	5m	Approx. 240 g
FL-XC10R	10m	Approx. 500 g
FL-XC25R	25m	Approx. 1200 g

●Parallel Cable

Model	Cable Length	Weight
FL-XCP2	2m	Approx. 180 g

Dimensions (Unit: mm)

●Extension Cable

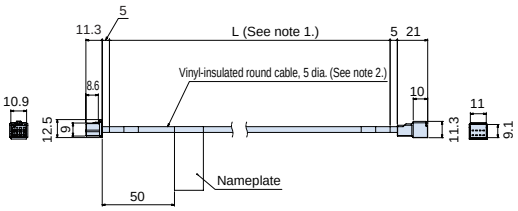

Note 1. Depends on the cable length.
Note 2. The cable diameter is 6.2 for robot cables.

●Parallel Cable

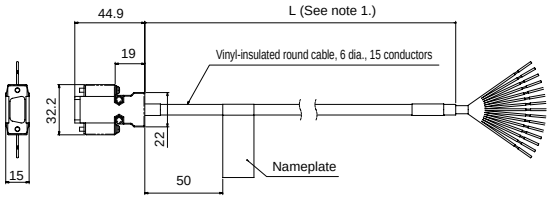

Note 1. Depends on the cable length.

For FLV series

Order Information

Type	Model	Cable Length	Dimensions
Extension Cable for Standard Lighting ✻1	**FLV-XC1**	1m	A
	FLV-XC2	2m	
	FLV-XC3	3m	
	FLV-XC5	5m	
Extension Cable for Spot Lighting	**FLV-XC1EP**	1m	B
	FLV-XC2EP	2m	
	FLV-XC3EP	3m	
	FLV-XC5EP	5m	
Branch Cable for Standard Lighting ✻1	**FLV-XC1S2**	1m	C
	FLV-XC2S2	2m	
	FLV-XC3S2	3m	
	FLV-XC5S2	5m	

✻1. Standard lighting is all FLV-series Lightings excluding the FLV-EP-series Spot Lightings.

Dimensions (Unit: mm)

A FLV-XC□

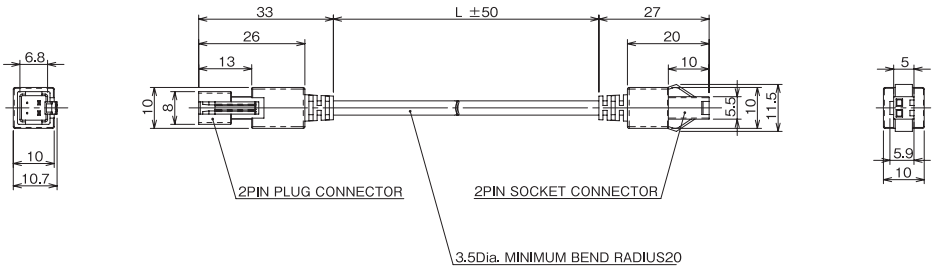

Model	L
FLV-XC1	1000
FLV-XC2	2000
FLV-XC3	3000
FLV-XC5	5000

B FLV-XC□EP

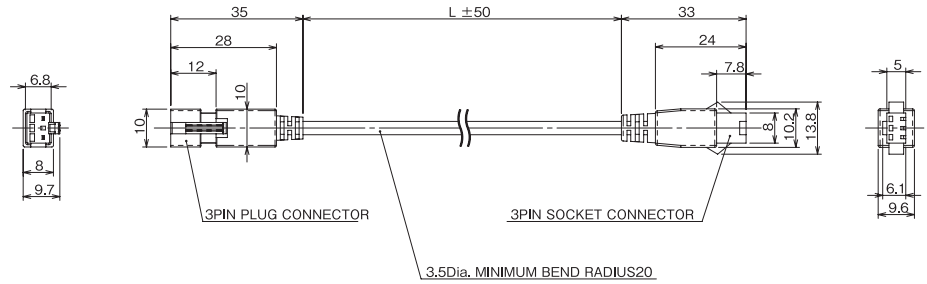

Model	L
FLV-XC1EP	1000
FLV-XC2EP	2000
FLV-XC3EP	3000
FLV-XC5EP	5000

C FLV-XC□S2

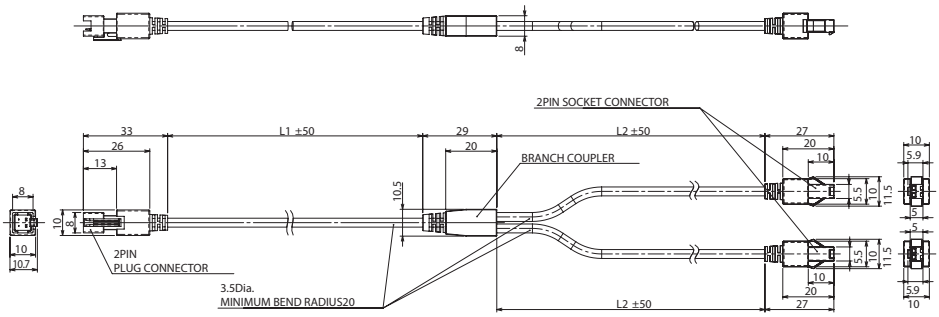

Model	L1	L2
FLV-XC1S2	500	500
FLV-XC2S2	1000	1000
FLV-XC3S2	1000	2000
FLV-XC5S2	2000	3000

Diffusion Plates and Polarization Plates

For FL series

Order Information

●Diffusion Plates

Standard Models	Model	Outer diameter (mm)	Weight
Bar Lighting	FL-BR5020DF	49.8×18×4	Approx. 5 g
	FL-BR9120DF	90.6×18×4	Approx. 10 g
	FL-BR13120DF	131.4×18×4	Approx. 15 g

Standard Models	Model	Outer diameter/Inner diameter/Thickness (mm)	Weight
Direct Ring Lighting	FL-DR32DF	32/10/4	Approx. 5 g
	FL-DR50DF	50/28/4	Approx. 10 g
	FL-DR90DF	90/50/4	Approx. 15 g

●Polarization Plates

Standard Models	Model	Outer diameter/Inner diameter/Thickness (mm)	Weight
Direct Ring Lighting	FL-DR32PL	32/10/2	Approx. 3 g
	FL-DR50PL	50/28/2	Approx. 5 g
	FL-DR90PL	90/50/2	Approx. 15 g

For FLV series

Order Information

●Diffusion Plates

Standard Models	Model	Connectable Lighting
Direct Ring Lighting	FLV-DR12030DF	Direct Ring Lighting FLV-DR12030□
	FLV-DR9215DF	Direct Ring Lighting FLV-DR9215□
	FLV-DR9030DF	Direct Ring Lighting FLV-DR9030□
	FLV-DR9000DF	Direct Ring Lighting FLV-DR9000□
	FLV-DR7000DF	Direct Ring Lighting FLV-DR7000□
	FLV-DR7030DF	Direct Ring Lighting FLV-DR7030□
	FLV-DR6615DF	Direct Ring Lighting FLV-DR6615□
	FLV-DR5030DF	Direct Ring Lighting FLV-DR5030□
	FLV-DR3220DF	Direct Ring Lighting FLV-DR3220□

●Diffusion Plates

Standard Models	Model	Connectable Lighting
Bar Lighting	FLV-BR48031DF	Bar Lighting FLV-BR48031□
	FLV-BR38037DF	Bar Lighting FLV-BR38037□
	FLV-BR21230DF	Bar Lighting FLV-BR21230□
	FLV-BR21222DF	Bar Lighting FLV-BR21222□
	FLV-BR15020DF	Bar Lighting FLV-BR15020□
	FLV-BR14030DF	Bar Lighting FLV-BR14030□
	FLV-BR11222DF	Bar Lighting FLV-BR11222□
	FLV-BR8532DF	Bar Lighting FLV-BR8532□
	FLV-BR6022DF	Bar Lighting FLV-BR6022□

●Diffusion Plates

Standard Models	Model	Connectable Lighting
Low Angle Ring Lighting	FLV-DL15060DF	Low Angle Ring Lighting FLV-DL15060□
	FLV-DL12060DF	Low Angle Ring Lighting FLV-DL12060□
	FLV-DL7260DF	Low Angle Ring Lighting FLV-DL7260□
	FLV-DL5890DF	Low Angle Ring Lighting FLV-DL5890□

Mounting Brackets

For FL series

Order Information

Standard Models	Model
Bar Lighting	FL-XBK1

Dimensions (Unit: mm)

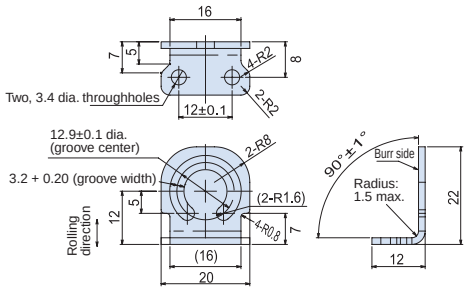

Burrs must extend less than 0.1 mm.

Options

SV-V Series

- Standard CCTV lens.
- Lineup of 9 models with focal lengths ranging from 6 to 100 mm.
- Locking set screws for focus and iris.
- More robust structure designed for machine vision.
- Lower distortion and higher resolution than previous CCTV lenses.

Order Information

Series	Model	Dimension	Focal distance (mm)	Focus (F No)	Field of view (V × H)	Closest distance (mm)	Filter size	Weight (g)	Total length (mm)	Maximum compatible CCD
C-mount Lens for 1/3-inch image sensor (Recommend: FZ-S□/ FZ-SH□/ FH-S□)	**3Z4S-LE SV-0614V**	A	6	1.4	42.3°× 54.6°	200	M27.0 P0.5	49	30	1/3 inch
	3Z4S-LE SV-0813V	B	8	1.3	44.6°× 57.3°	200	M25.5 P0.5	55	34	1/3 inch
	3Z4S-LE SV-1214V	C	12	1.4	21.9°× 38.9°	300	M27.0 P0.5	44	29.5	1/3 inch
	3Z4S-LE SV-1614V	D	16	1.4	22.8°× 30.1°	400	M27.0 P0.5	34	24.5	1/3 inch
	3Z4S-LE SV-2514V	E	25	1.4	14.9°× 19.8°	500	M27.0 P0.5	36	24	1/3 inch
	3Z4S-LE SV-3518V	F	35	1.8	10.8°× 14.4°	300	M27.0 P0.5	47	33.5	1/3 inch
	3Z4S-LE SV-5018V	G	50	1.8	7.9°× 10.5°	300	M30.5 P0.5	67	37	1/3 inch
	3Z4S-LE SV-7527V	H	75	2.7	4.9°× 6.6°	1200	M30.5 P0.5	76	42	1/3 inch
	3Z4S-LE SV-10035V	I	100	3.5	4.0°× 5.3°	2000	M30.5 P0.5	79	43.9	1/3 inch

Dimensions

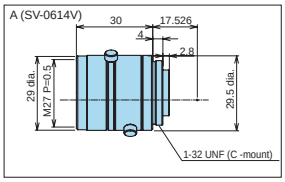

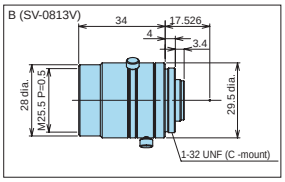

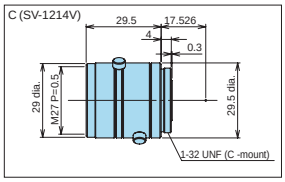

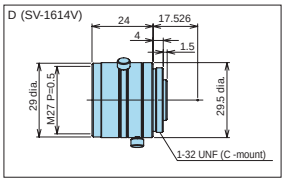

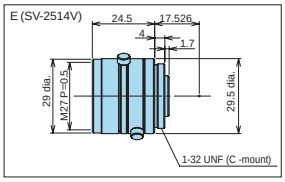

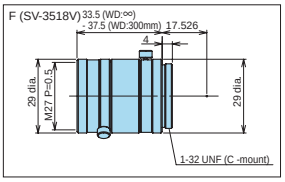

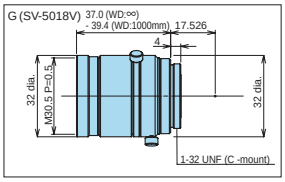

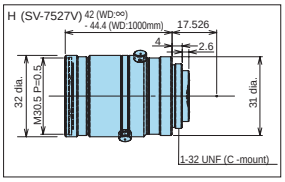

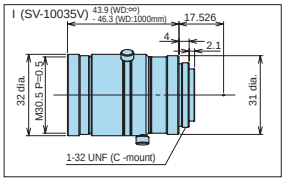

SV-H/VS-H1 Series

- High-resolution lens for megapixel camera.
- Lineup of 9 models for 2/3-inch cameras, with focal lengths ranging from 6 to 100 mm, and 5 models for 1-inch Cameras.
- Locking set screws for focus and iris.
- Bright F number of 1.4 for high-speed CMOS camera.
- Compact design but minimized decrease in distortion and brightness.

for 2/3-inch image sensor SV-H series

for 1-inch image sensor VS-H1 series

Order Information

Series	Model	Dimension	Focal distance (mm)	Focus (F No)	Field of view (V × H)	Closest distance (mm)	Filter size	Weight (g)	Total length (mm)	Maximum compatible CCD
C-mount Lens for 2/3-inch image sensor (Recommend: FZ-S□2M/ FZ-S□5M/ FH-S□02)	**3Z4S-LE SV-0614H**	A	6	1.4	56.8°× 71.5°	100	M40.5 P0.5	145	57.5	2/3 inch
	3Z4S-LE SV-0814H	B	8	1.4	44.9°× 57.6°	100	M35.5 P0.5	125	52.5	2/3 inch
	3Z4S-LE SV-1214H	C	12	1.4	30.2°× 39.6°	100	M27 P0.5	85	51	2/3 inch
	3Z4S-LE SV-1614H	D	16	1.4	23.1°× 30.6°	100	M27 P0.5	85	47.5	2/3 inch
	3Z4S-LE SV-2514H	E	25	1.4	15.0°× 20.0°	150	M27 P0.5	65	36	2/3 inch
	3Z4S-LE SV-3514H	F	35	1.4	10.8°× 14.3°	200	M35.5 P0.5	150	45.5	2/3 inch
	3Z4S-LE SV-5014H	G	50	1.4	7.5°× 10.0°	300	M40.5 P0.5	170	57.7	2/3 inch
	3Z4S-LE SV-7525H	H	75	2.5	2/3"= 5.0° × 6.7° 1"= 7.3° × 9.7°	1200	M34.0 P0.5	85	49.5	1 inch
	3Z4S-LE SV-10028H	I	100	2.8	2/3"= 3.9° × 5.1° 1"= 5.6° × 7.5°	2000	M37.5 P0.5	105	66.5	1 inch
C-mount Lens for 1-inch image sensor (Recommend: FH-S□04)	**3Z4S-LE VS-1214H1**	J	12	1.4	44.0°× 56.9°	300	M35.5 P0.5	140	48	1 inch
	3Z4S-LE VS-1614H1	K	16	1.4	33.7°× 44.3°	300	M30.5 P0.5	110	42.5	1 inch
	3Z4S-LE VS-2514H1	L	25	1.4	21.5°× 28.5°	300	M30.5 P0.5	90	33.5	1 inch
	3Z4S-LE VS-3514H1	M	35	1.4	15.6°× 20.7°	300	M30.5 P0.5	100	35	1 inch
	3Z4S-LE VS-5018H1	N	50	1.8	11.0°× 14.6°	500	M40.5 P0.5	135	44.5	1 inch

Dimensions

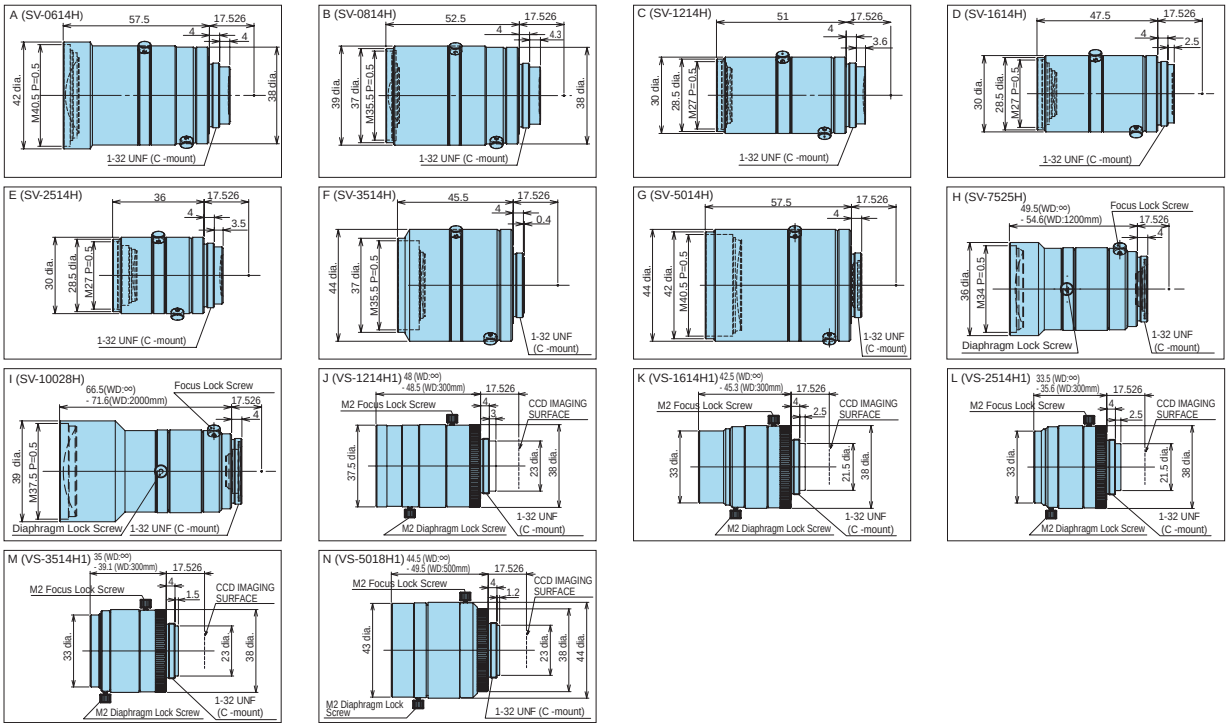

Vibrations and shocks resistant C-mount Lens

VS-MC Series

- Lineup of 7 models with focal lengths ranging from 15 to 75 mm.
- A fixation ring is used to fasten to the surface.
- Internal structure of the lens is designed to strengthen against vibration to achieve higher resistance to vibration than previous lenses, which allows the lens to be moved or to be used in a place subject to vibration.
- Install in narrow space without a locking set screw.

Order Information

Series	Model	Dimension	Focal distance (mm)	Focus (F No.)	Maximum outer diameter: (mm)	Total length (mm)	Filter size	WD (mm)	Depth of field (mm)	Maximum compatible CCD
Vibrations and shocks resistant C-mount Lens for 2/3-inch image sensor (Recommend: FZ-S□/FZ-S□2M/FZ-S□5M2/FZ-SH□/FH-S□/FH-S□02)	**3Z4S-LE VS-MC15**	A	15	Maximum aperture	31 dia.	29.5	M27.0 P0.5	492.2	183.1	2/3 inch
								67.3	4.8	
								42.3	2.3	
	3Z4S-LE VS-MC15-FNO56			5.6	31 dia.	29.5	M27.0 P0.5	492.2	512.7	
								67.3	13.4	
								42.3	6.5	
	3Z4S-LE VS-MC15-FNO80			8	31 dia.	29.5	M27.0 P0.5	492.2	732.4	
								67.3	13.4	
								42.3	9.2	
	3Z4S-LE VS-MC20	B	20	Maximum aperture	31 dia.	30.5	M27.0 P0.5	516.5	110.8	2/3 inch
								81.0	3.4	
								49.8	1.5	
	3Z4S-LE VS-MC20-FNO56			5.6	31 dia.	30.5	M27.0 P0.5	516.5	291.2	
								81.0	9.0	
								49.8	3.9	
	3Z4S-LE VS-MC20-FNO80			8	31dia.	30.5	M27.0 P0.5	516.5	416.0	
								81.0	12.8	
								49.8	5.6	
	3Z4S-LE VS-MC25N	C	25	Maximum aperture	31dia.	38.0	M27.0 P0.5	513.9	67.2	2/3 inch
								106.0	3.2	
								54.9	1.0	
	3Z4S-LE VS-MC25N-FNO56			5.6	31dia.	38.0	M27.0 P0.5	513.9	188.2	
								106.0	9.0	
								54.9	2.7	
	3Z4S-LE VS-MC25N-FNO80			8	31dia.	38.0	M27.0 P0.5	513.9	268.8	
								106.0	12.8	
								54.9	3.8	
	3Z4S-LE VS-MC30	D	30	Maximum aperture	31dia.	35.7	M27.0 P0.5	514.6	47.1	2/3 inch
								214.5	8.2	
								81.1	11.0	
	3Z4S-LE VS-MC30-FNO56			5.6	31dia.	35.7	M27.0 P0.5	514.6	131.9	
								214.5	22.9	
								81.1	3.2	
	3Z4S-LE VS-MC30-FNO80			8	31dia.	35.7	M27.0 P0.5	514.6	188.4	
								214.5	32.7	
								81.1	4.6	
	3Z4S-LE VS-MC35	E	35	Maximum aperture	31dia.	45.7	M27.0 P0.5	213.0	2.8	2/3 inch
								196.4	2.2	
								145.9	0.6	
	3Z4S-LE VS-MC35-FNO56			5.6	31dia.	45.7	M27.0 P0.5	213.0	8.4	
								196.4	6.5	
								145.9	1.7	
	3Z4S-LE VS-MC35-FNO80			8	31dia.	45.7	M27.0 P0.5	213.0	11.9	
								196.4	9.2	
								145.9	2.5	

Vibrations and shocks resistant C-mount Lens VS-MC Series

Series	Model	Dimension	Focal distance (mm)	Focus (F No.)	Maximum outer diameter: (mm)	Total length (mm)	Filter size	WD (mm)	Depth of field (mm)	Maximum compatible CCD
Vibrations and shocks resistant C-mount Lens for 2/3-inch image sensor (Recommend: FZ-S□/FZ-S□2M/FZ-S□5M2/FZ-SH□/FH-S□/FH-S□02)	**3Z4S-LE VS-MC50**	F	50	Maximum aperture	31dia.	63.9	M27.0 P0.5	625.8	33.8	2/3 inch
								262.4	6.0	
								121.1	1.3	
	3Z4S-LE VS-MC50-FNO56			5.6	31dia.	63.9	M27.0 P0.5	625.8	75.6	
								262.4	13.4	
								121.1	2.9	
	3Z4S-LE VS-MC50-FNO80			8	31dia.	63.9	M27.0 P0.5	625.8	108.0	
								262.4	19.2	
								121.1	4.1	
	3Z4S-LE VS-MC75	G	75	Maximum aperture	31dia.	105.5	M27.0 P0.5	563.0	17.7	2/3 inch
								404.4	9.1	
								153.8	1.3	
	3Z4S-LE VS-MC75-FNO56			5.6	31dia.	105.5	M27.0 P0.5	563.0	26.1	
								404.4	13.4	
								153.8	1.9	
	3Z4S-LE VS-MC75-FNO80			8	31dia.	105.5	M27.0 P0.5	563.0	37.2	
								404.4	19.2	
								153.8	2.7	

Dimensions

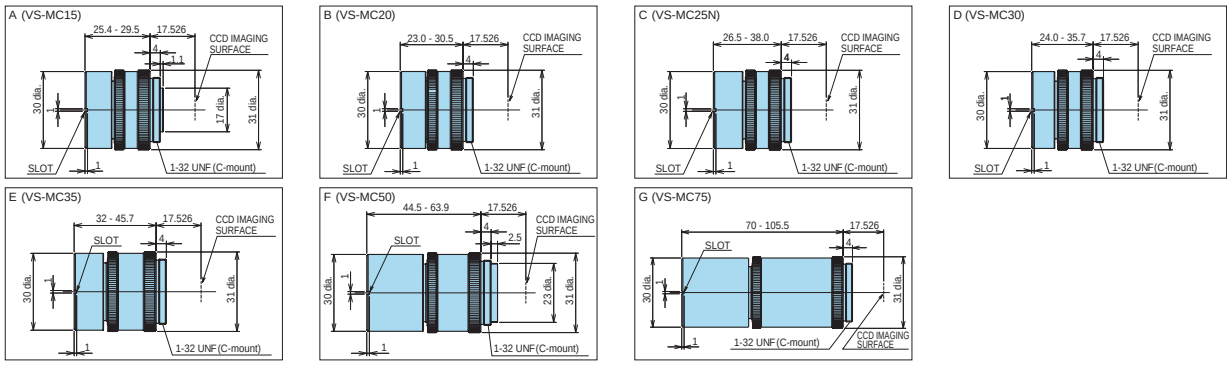

Lenses

OMRON

Lens for small camera of Vision Sensor FZ series

FZ-LES Series

- Lenses for small cameras: 12 x 12 mm pen-shaped camera and 17 mm thick flat camera.

Order Information

Model	Focal length	Brightness
FZ-LES3	3mm	F2.0
FZ-LES6	6mm	F2.0
FZ-LES16	16mm	F3.4
FZ-LES30	30mm	F3.4

Dimensions

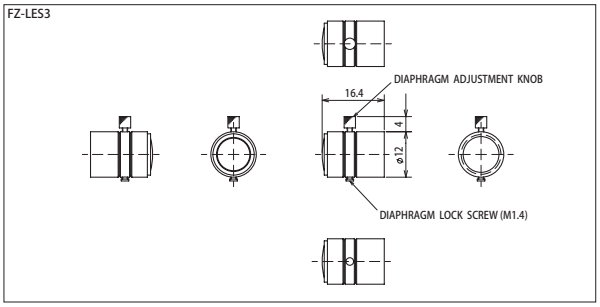

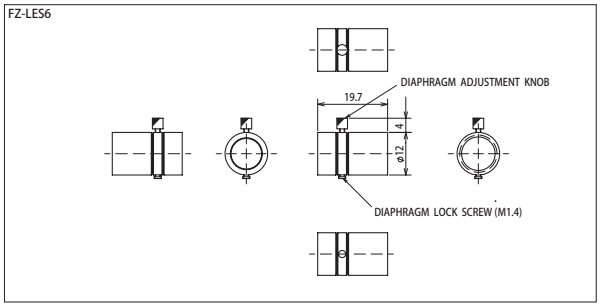

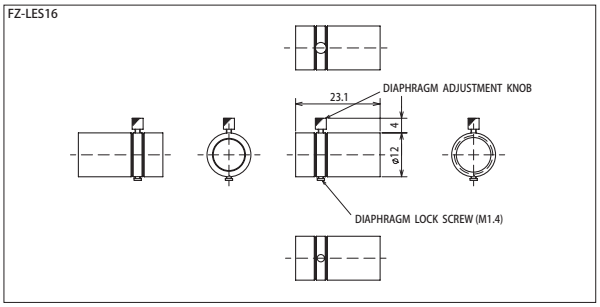

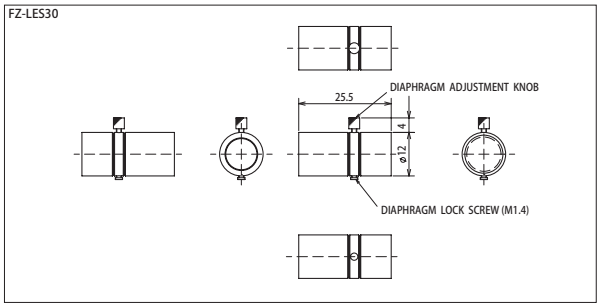

Non-telecentric Macro Lens

VS-MC Series

- Lineup of 4 models with magnifications ranging from 1.0 to 0.1 and WD ranging from 325.5 to 82.4 mm.
- 16-mm-dia. simple mechanism with high resistance to vibration.

Order Information

Model	Dimension	Magnification	Field of vision ✻1 (V × H) mm	Dimension Effective FNO	O/I (mm)	WD (mm)	Depth of field ✻2	Resolution ✻3	TV distortion
3Z4S-LE VS-MC01-330	A	0.1	66.0 × 88.0	4.43	364.5	325.5	35.4mm	30.5µm	0.01% max.
3Z4S-LE VS-MC03-180	B	0.3	22.0 × 29.3	5.29	248.5	184.8	4.7mm	11.6µm	0.00% max.
3Z4S-LE VS-MC05-130	C	0.5	13.2 × 17.6	6.10	198.8	126.3	2.0mm	8.2µm	0.00% max.
3Z4S-LE VS-MC1-80	D	1.0	6.6 × 8.8	8.14	176.8	82.4	0.7mm	5.5µm	0.00% max.

✻1 Calculated using the size of an image element (2/3 inch = 6.6 × 8.8 mm).
✻2 Calculated using a permissible circle of confusion diameter of 0.04 mm.
✻3 Calculated using a wavelength of 550 nm.

Dimensions

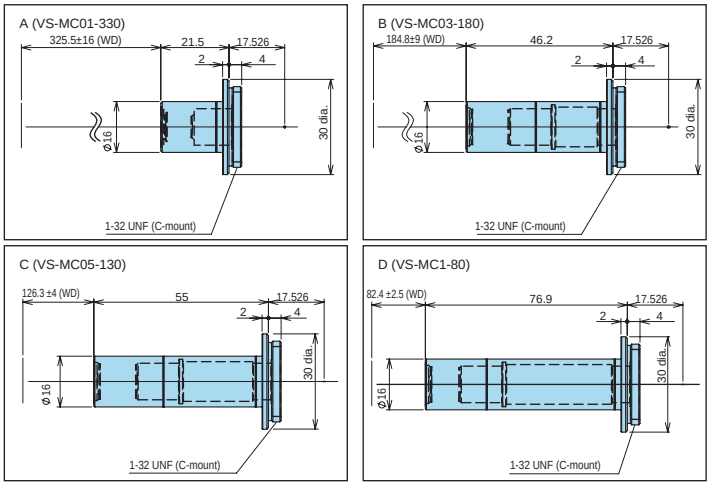

Lenses

Lens Option

Order Information

Polarizing Filter

Model
3Z4S-LE SV-PL255
3Z4S-LE SV-PL270
3Z4S-LE SV-PL305

Extension Tubes

Model	Length (mm)
3Z4S-LE SV-EXR	7-piece set (40, 20, 10, 5, 2.0, 1.0, 0.5 mm)

✻ These Extension Tubes are also available individually. Order using the following model number, replacing the box with the desired length: 3Z4S-LE SV-EXR□. (0.5, 1, 2, 5, 10, 15, 20, 25, 30, 40, 50 mm)

Extension Tubes for Small Digital CCD Cameras

Model	Contents
FZ-LESR	Set of 3 tubes (15 mm, 10 mm, 5 mm) Maximum outer diameter: 12 mm dia.

Rear Converter Lens

Model
3Z4S-LE SV-1.5X ✻1
3Z4S-LE SV-2.0X ✻2

✻1 In the following lenses, it is necessary to use it together with the extension tubes of 5mm or more.
SV-0614H, SV-0814H, SV-1214H, SV-2514H, SV-0614V, SV-0813V

✻2 In the following lenses, it is necessary to use it together with the extension tubes of 5mm or more.
SV-0614H, SV-0814H, SV-1214H, SV-2514H, SV-0813V

●Configuration

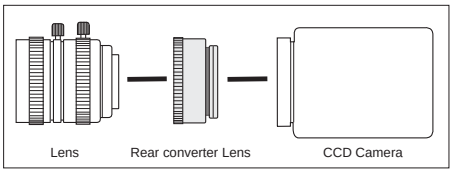

OMRON

Terms and Conditions of Sale

1. Offer; Acceptance. These terms and conditions (these "Terms") are deemed part of all quotes, agreements, purchase orders, acknowledgments, price lists, catalogs, manuals, brochures and other documents, whether electronic or in writing, relating to the sale of products or services (collectively, the "Products") by Omron Electronics LLC and its subsidiary companies ("Omron"). Omron objects to any terms or conditions proposed in Buyer's purchase order or other documents which are inconsistent with, or in addition to, these Terms.
2. Prices; Payment Terms. All prices stated are current, subject to change without notice by Omron. Omron reserves the right to increase or decrease prices on any unshipped portions of outstanding orders. Payments for Products are due net 30 days unless otherwise stated in the invoice.
3. Discounts. Cash discounts, if any, will apply only on the net amount of invoices sent to Buyer after deducting transportation charges, taxes and duties, and will be allowed only if (i) the invoice is paid according to Omron's payment terms and (ii) Buyer has no past due amounts.
4. Interest. Omron, at its option, may charge Buyer 1-1/2% interest per month or the maximum legal rate, whichever is less, on any balance not paid within the stated terms.
5. Orders. Omron will accept no order less than $200 net billing.
6. Governmental Approvals. Buyer shall be responsible for, and shall bear all costs involved in, obtaining any government approvals required for the importation or sale of the Products.
7. Taxes. All taxes, duties and other governmental charges (other than general real property and income taxes), including any interest or penalties thereon, imposed directly or indirectly on Omron or required to be collected directly or indirectly by Omron for the manufacture, production, sale, delivery, importation, consumption or use of the Products sold hereunder (including customs duties and sales, excise, use, turnover and license taxes) shall be charged to and remitted by Buyer to Omron.
8. Financial. If the financial position of Buyer at any time becomes unsatisfactory to Omron, Omron reserves the right to stop shipments or require satisfactory security or payment in advance. If Buyer fails to make payment or otherwise comply with these Terms or any related agreement, Omron may (without liability and in addition to other remedies) cancel any unshipped portion of Products sold hereunder and stop any Products in transit until Buyer pays all amounts, including amounts payable hereunder, whether or not then due, which are owing to it by Buyer. Buyer shall in any event remain liable for all unpaid accounts.
9. Cancellation; Etc. Orders are not subject to rescheduling or cancellation unless Buyer indemnifies Omron against all related costs or expenses.
10. Force Majeure. Omron shall not be liable for any delay or failure in delivery resulting from causes beyond its control, including earthquakes, fires, floods, strikes or other labor disputes, shortage of labor or materials, accidents to machinery, acts of sabotage, riots, delay in or lack of transportation or the requirements of any government authority.
11. Shipping; Delivery. Unless otherwise expressly agreed in writing by Omron:
    a. Shipments shall be by a carrier selected by Omron; Omron will not drop ship except in "break down" situations.
    b. Such carrier shall act as the agent of Buyer and delivery to such carrier shall constitute delivery to Buyer;
    c. All sales and shipments of Products shall be FOB shipping point (unless otherwise stated in writing by Omron), at which point title and risk of loss shall pass from Omron to Buyer; provided that Omron shall retain a security interest in the Products until the full purchase price is paid;
    d. Delivery and shipping dates are estimates only; and
    e. Omron will package Products as it deems proper for protection against normal handling and extra charges apply to special conditions.
12. Claims. Any claim by Buyer against Omron for shortage or damage to the Products occurring before delivery to the carrier must be presented in writing to Omron within 30 days of receipt of shipment and include the original transportation bill signed by the carrier noting that the carrier received the Products from Omron in the condition claimed.
13. Warranties. (a) Exclusive Warranty. Omron's exclusive warranty is that the Products will be free from defects in materials and workmanship for a period of twelve months from the date of sale by Omron (or such other period expressed in writing by Omron). Omron disclaims all other warranties, express or implied. (b) Limitations. OMRON MAKES NO WARRANTY OR REPRESENTATION, EXPRESS OR IMPLIED, ABOUT NON-INFRINGEMENT, MERCHANTABILITY OR FITNESS FOR A PARTICULAR PURPOSE OF THE PRODUCTS. BUYER ACKNOWLEDGES THAT IT ALONE HAS DETERMINED THAT THE PRODUCTS WILL SUITABLY MEET THE REQUIREMENTS OF THEIR INTENDED USE. Omron further disclaims all warranties and responsibility of any type for claims or expenses based on infringement by the Products or otherwise of any intellectual property right. (c) Buyer Remedy. Omron's sole obligation hereunder shall be, at Omron's election, to (i) replace (in the form originally shipped with Buyer responsible for labor charges for removal or replacement thereof) the non-complying Product, (ii) repair the non-complying Product, or (iii) repay or credit Buyer an amount equal to the purchase price of the non-complying Product; provided that in no event shall Omron be responsible for warranty, repair, indemnity or any other claims or expenses regarding the Products unless Omron's analysis confirms that the Products were properly handled, stored, installed and maintained and not subject to contamination, abuse, misuse or inappropriate modification. Return of any Products by Buyer must be approved in writing by Omron before shipment. Omron Companies shall not be liable for the suitability or unsuitability or the results from the use of Products in combination with any electrical or electronic components, circuits, system assemblies or any other materials or substances or environments. Any advice, recommendations or information given orally or in writing, are not to be construed as an amendment or addition to the above warranty. See http://www.omron247.com or contact your Omron representative for published information.
14. Limitation on Liability; Etc. OMRON COMPANIES SHALL NOT BE LIABLE FOR SPECIAL, INDIRECT, INCIDENTAL, OR CONSEQUENTIAL DAMAGES, LOSS OF PROFITS OR PRODUCTION OR COMMERCIAL LOSS IN ANY WAY CONNECTED WITH THE PRODUCTS, WHETHER SUCH CLAIM IS BASED IN CONTRACT, WARRANTY, NEGLIGENCE OR STRICT LIABILITY. Further, in no event shall liability of Omron Companies exceed the individual price of the Product on which liability is asserted.
15. Indemnities. Buyer shall indemnify and hold harmless Omron Companies and their employees from and against all liabilities, losses, claims, costs and expenses (including attorney's fees and expenses) related to any claim, investigation, litigation or proceeding (whether or not Omron is a party) which arises or is alleged to arise from Buyer's acts or omissions under these Terms or in any way with respect to the Products. Without limiting the foregoing, Buyer (at its own expense) shall indemnify and hold harmless Omron and defend or settle any action brought against such Companies to the extent based on a claim that any Product made to Buyer specifications infringed intellectual property rights of another party.
16. Property; Confidentiality. Any intellectual property in the Products is the exclusive property of Omron Companies and Buyer shall not attempt to duplicate it in any way without the written permission of Omron. Notwithstanding any charges to Buyer for engineering or tooling, all engineering and tooling shall remain the exclusive property of Omron. All information and materials supplied by Omron to Buyer relating to the Products are confidential and proprietary, and Buyer shall limit distribution thereof to its trusted employees and strictly prevent disclosure to any third party.
17. Export Controls. Buyer shall comply with all applicable laws, regulations and licenses regarding (i) export of products or information; (iii) sale of products to "forbidden" or other proscribed persons; and (ii) disclosure to non-citizens of regulated technology or information.
18. Miscellaneous. (a) Waiver. No failure or delay by Omron in exercising any right and no course of dealing between Buyer and Omron shall operate as a waiver of rights by Omron. (b) Assignment. Buyer may not assign its rights hereunder without Omron's written consent. (c) Law. These Terms are governed by the law of the jurisdiction of the home office of the Omron company from which Buyer is purchasing the Products (without regard to conflict of law principles). (d) Amendment. These Terms constitute the entire agreement between Buyer and Omron relating to the Products, and no provision may be changed or waived unless in writing signed by the parties. (e) Severability. If any provision hereof is rendered ineffective or invalid, such provision shall not invalidate any other provision. (f) Setoff. Buyer shall have no right to set off any amounts against the amount owing in respect of this invoice. (g) Definitions. As used herein, "including" means "including without limitation"; and "Omron Companies" (or similar words) mean Omron Corporation and any direct or indirect subsidiary or affiliate thereof.

Certain Precautions on Specifications and Use

1. Suitability of Use. Omron Companies shall not be responsible for conformity with any standards, codes or regulations which apply to the combination of the Product in the Buyer's application or use of the Product. At Buyer's request, Omron will provide applicable third party certification documents identifying ratings and limitations of use which apply to the Product. This information by itself is not sufficient for a complete determination of the suitability of the Product in combination with the end product, machine, system, or other application or use. Buyer shall be solely responsible for determining appropriateness of the particular Product with respect to Buyer's application, product or system. Buyer shall take application responsibility in all cases but the following is a non-exhaustive list of applications for which particular attention must be given:
   (i) Outdoor use, uses involving potential chemical contamination or electrical interference, or conditions or uses not described in this document.
   (ii) Use in consumer products or any use in significant quantities.
   (iii) Energy control systems, combustion systems, railroad systems, aviation systems, medical equipment, amusement machines, vehicles, safety equipment, and installations subject to separate industry or government regulations.
   (iv) Systems, machines and equipment that could present a risk to life or property. Please know and observe all prohibitions of use applicable to this Product.
   NEVER USE THE PRODUCT FOR AN APPLICATION INVOLVING SERIOUS RISK TO LIFE OR PROPERTY OR IN LARGE QUANTITIES WITHOUT ENSURING THAT THE SYSTEM AS A WHOLE HAS BEEN DESIGNED TO ADDRESS THE RISKS, AND THAT THE OMRON'S PRODUCT IS PROPERLY RATED AND INSTALLED FOR THE INTENDED USE WITHIN THE OVERALL EQUIPMENT OR SYSTEM.
2. Programmable Products. Omron Companies shall not be responsible for the user's programming of a programmable Product, or any consequence thereof.
3. Performance Data. Data presented in Omron Company websites, catalogs and other materials is provided as a guide for the user in determining suitability and does not constitute a warranty. It may represent the result of Omron's test conditions, and the user must correlate it to actual application requirements. Actual performance is subject to the Omron's Warranty and Limitations of Liability.
4. Change in Specifications. Product specifications and accessories may be changed at any time based on improvements and other reasons. It is our practice to change part numbers when published ratings or features are changed, or when significant construction changes are made. However, some specifications of the Product may be changed without any notice. When in doubt, special part numbers may be assigned to fix or establish key specifications for your application. Please consult with your Omron's representative at any time to confirm actual specifications of purchased Product.
5. Errors and Omissions. Information presented by Omron Companies has been checked and is believed to be accurate; however, no responsibility is assumed for clerical, typographical or proofreading errors or omissions.

OMRON
AUTOMATION & SAFETY

OMRON INDUSTRIAL AUTOMATION • THE AMERICAS HEADQUARTERS
Schaumburg, IL USA • 847.843.7900 • 800.556.6766 • www.omron247.com

OMRON CANADA, INC. • HEAD OFFICE
Toronto, ON, Canada • 416.286.6465 • 866.986.6766 • www.omron247.com

OMRON ELECTRONICS DE MEXICO • HEAD OFFICE
México DF • 52.55.59.01.43.00 • 001.800.556.6766 • mela@omron.com

OMRON ELECTRONICS DE MEXICO • SALES OFFICE
Apodaca, N.L. • 52.81.11.56.99.20 • 001.800.556.6766 • mela@omron.com

OMRON ELETRÔNICA DO BRASIL LTDA • HEAD OFFICE
São Paulo, SP, Brasil • 55.11.2101.6300 • www.omron.com.br

OMRON ARGENTINA • SALES OFFICE
Cono Sur • 54.11.4783.5300

OMRON CHILE • SALES OFFICE
Santiago • 56.9.9917.3920

OTHER OMRON LATIN AMERICA SALES
54.11.4783.5300

OMRON EUROPE B.V. • Wegalaan 67-69, NL-2132 JD, Hoofddorp, The Netherlands. • Tel: +31 (0) 23 568 13 00
Fax: +31 (0) 23 568 13 88 • www.industrial.omron.eu

Cat. No. Q200-E1-01 07/13 Note: Specifications are subject to change. © 2013 Omron Electronics LLC Printed in U.S.A.

ООО «ЛайфЭлектроникс» “LifeElectronics” LLC

ИНН 7805602321 КПП 780501001 Р/С 40702810122510004610 ФАКБ "АБСОЛЮТ БАНК" (ЗАО) в г.Санкт-Петербурге К/С 30101810900000000703 БИК 044030703

Компания «Life Electronics» занимается поставками электронных компонентов импортного и отечественного производства от производителей и со складов крупных дистрибьюторов Европы, Америки и Азии.

С конца 2013 года компания активно расширяет линейку поставок компонентов по направлению коаксиальный кабель, кварцевые генераторы и конденсаторы (керамические, пленочные, электролитические), за счёт заключения дистрибьюторских договоров

Мы предлагаем:

- *Конкурентоспособные цены и скидки постоянным клиентам.*
- *Специальные условия для постоянных клиентов.*
- *Подбор аналогов.*
- *Поставку компонентов в любых объемах, удовлетворяющих вашим потребностям.*

- *Приемлемые сроки поставки, возможна ускоренная поставка.*
- *Доставку товара в любую точку России и стран СНГ.*
- *Комплексную поставку.*
- *Работу по проектам и поставку образцов.*
- *Формирование склада под заказчика.*

- *Сертификаты соответствия на поставляемую продукцию (по желанию клиента).*
- *Тестирование поставляемой продукции.*
- *Поставку компонентов, требующих военную и космическую приемку.*
- *Входной контроль качества.*
- *Наличие сертификата ISO.*

В составе нашей компании организован Конструкторский отдел, призванный помогать разработчикам, и инженерам.

Конструкторский отдел помогает осуществить:

- *Регистрацию проекта у производителя компонентов.*
- *Техническую поддержку проекта.*
- *Защиту от снятия компонента с производства.*
- *Оценку стоимости проекта по компонентам.*
- *Изготовление тестовой платы монтаж и пусконаладочные работы.*

Тел: +7 (812) 336 43 04 (многоканальный)
Email: org@lifeelectronics.ru

www.lifeelectronics.ru