THIS DRAWING IS UNPUBLISHED. RELEASED FOR PUBLICATION 20
© COPYRIGHT 20 BY TYCO ELECTRONICS CORPORATION ALL RIGHTS RESERVED.

LOC	DIST
GP	00

REVISIONS

P	LTR	DESCRIPTION	DATE	DWN	APVD
	A	RELEASED FOR PRODUCTION	02MAR2016	TX	SH
	B	REVISED PER ECO-18-007430	14MAY2018	TX	SH
	C	REVISED PER ECO-19-002273	24FEB2019	TX	SH

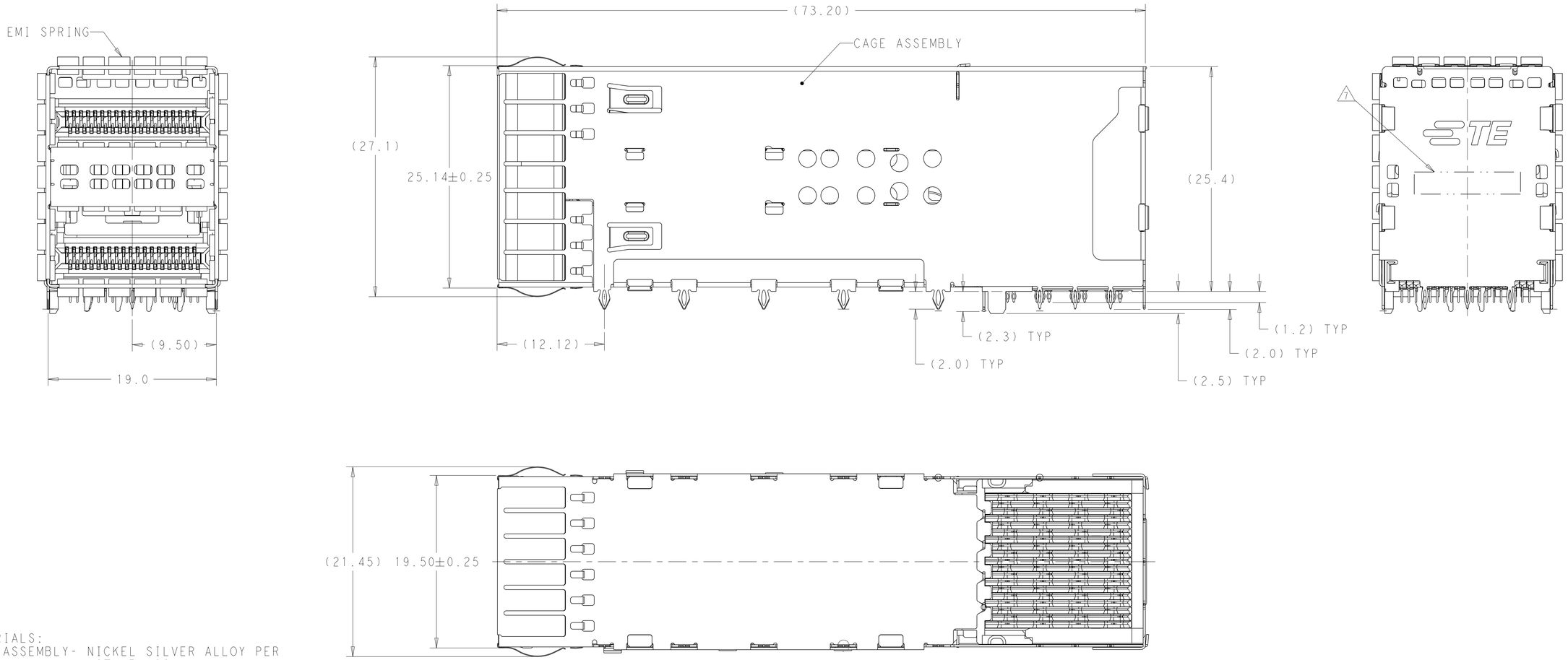

1. MATERIALS:
   CAGE ASSEMBLY- NICKEL SILVER ALLOY PER ASTM B 122.
   EMI SPRING- COPPER ALLOY, NICKEL PLATED.
   HOUSING- POLYESTER LCP WITH 94V-0.
   CHICKLET- POLYESTER LCP WITH 94V-0.
   CONTACT- COPPER ALLOY.
   LIGHTPIPE- POLYCARBONATE WITH 94V-0.

2. CONTACT FINISH: 0.76µm GOLD ON MATING END, 0.7-1.5µm MATT TIN ON COMPLIANT AREA, ALL OVER 1.27µm NICKEL.

3. DATUM AND BASIC DIMENSION ESTABLISHED BY CUSTOMER.

4. MINIMUM PCB THICKNESS OF 1.57.

5. THE ENTIRE AREA OF THE CONNECTOR FOOTPRINT, INDICATED BY THE DASHED LINE, TO BE CONSIDERED THE KEEPOUT AREA FOR COMPONENTS.

6. CROSS-HATCHED AREAS REPRESENT ZONES ON THE PCB THAT COME IN CONTACT WITH OR BE IN CLOSE PROXIMITY TO THE PLASTIC HOUSING OR THE CONNECTOR CAGE. INDICATED AREAS TO BE CONSIDERED TRACE FREE.

7. PART NUMBER AND DATE CODE MAKED IN APPROXIMATE AREA SHOWN.

8. CONTACT FINISH: 0.08µm MINIMUM GOLD OVER 0.68µm PALLADIUM-NICKEL ON MATING AREA, 0.7-1.5µm MATT TIN ON COMPLIANT AREA, ALL OVER 1.27µm NICKEL.

9. HATCHED AREA IS PLACEMENT ZONE FOR LED. LED SHOULD BE CENTERED WITHIN ZONE. RECOMMEND 0805 PACKAGE.

10. THE ORDER FOR LED LOACTION,CORRESPONDING TO THE LIGHT PIPES

CONTACT FINISH	DESCRIPTION	PART NUMBER
2	ROUND INDICATOR, 4LP(COATED)	2-2227669-1
2	LEFT INDICATOR UP	2-2227669-0
2	ROUND INDICATOR, 4LP	1-2227669-1
2	ALL INDICATOR DOWN, 4LP	1-2227669-0
2	LEFT INDICATOR DOWN, 4LP	2227669-9
2	LEFT INDICATOR UP, 4LP	2227669-8
2	ALL INDICATOR UP, 4LP	2227669-7
8	LEFT INDICATOR DOWN	2227669-6
8	LEFT INDICATOR UP	2227669-5
8	NO LIGHT PIPE	2227669-4
2	LEFT INDICATOR DOWN	2227669-3
2	LEFT INDICATOR UP	2227669-2
2	NO LIGHTPIPE	2227669-1

THIS DRAWING IS A CONTROLLED DOCUMENT.

DIMENSIONS: mm

TOLERANCES UNLESS OTHERWISE SPECIFIED:
0 PLC ±-
1 PLC ±0.25
2 PLC ±0.15
3 PLC ±-
4 PLC ±-
ANGLES ±-

MATERIAL - SEE NOTE 1
FINISH - -

DWN M.SHIRK 16JAN2013
CHK D.SZCZESNY 16JAN2013
APVD -
PRODUCT SPEC 108-60102
APPLICATION SPEC 114-60015
WEIGHT -

TE Connectivity

NAME CAGE AND CONNECTOR ASSEMBLY, WITH EMI SPRING FINGERS, THRU BEZEL, 2X1, ZQSFP+ STACKED

SIZE	CAGE CODE	DRAWING NO	RESTRICTED TO
A1	00779	C-2227669	-

CUSTOMER DRAWING SCALE 4:1 SHEET 1 OF 6 REV C1

THIS DRAWING IS UNPUBLISHED. RELEASED FOR PUBLICATION 20
© COPYRIGHT 20 BY TYCO ELECTRONICS CORPORATION ALL RIGHTS RESERVED.

LOC	DIST
GP	00

REVISIONS

P	LTR	DESCRIPTION	DATE	DWN	APVD
	-	SEE SHEET 1	-	-	-

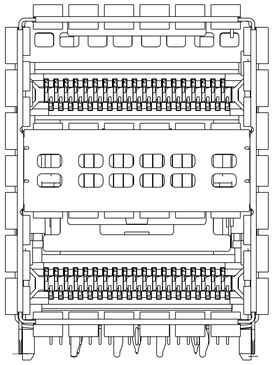

2227669-1
2227669-4
NO LIGHTPIPE IN ASSEMBLY

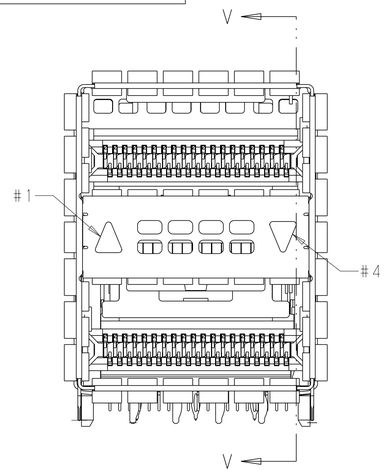

2227669-2
2227669-5
LEFT INDICATOR UP

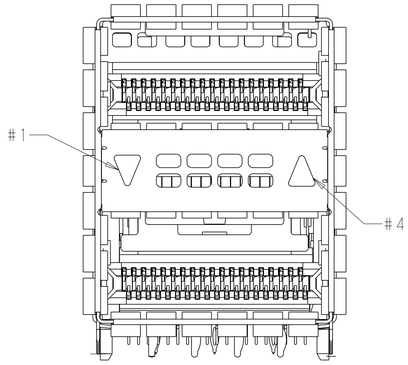

2227669-3
2227669-6
LEFT INDICATOR DOWN

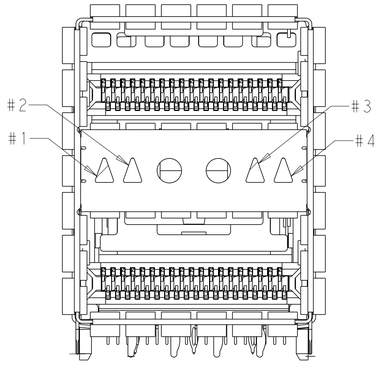

2227669-7
ALL INDICATOR UP, 4LP

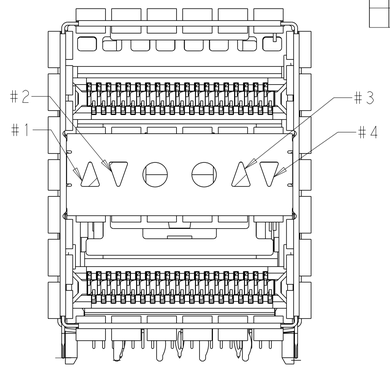

2227669-8
LEFT INDICATOR UP, 4LP

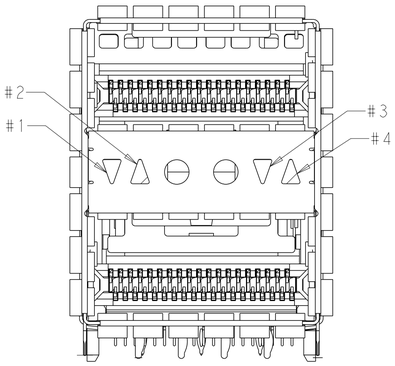

2227669-9
LEFT INDICATOR DOWN, 4LP

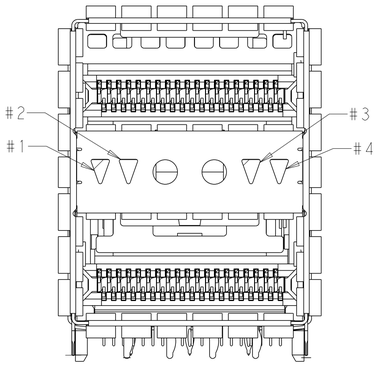

1-2227669-0
ALL INDICATOR DOWN, 4LP

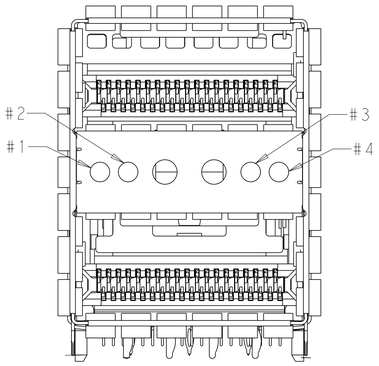

1-2227669-1
ROUND SHAPE INDICATORS, 4LP

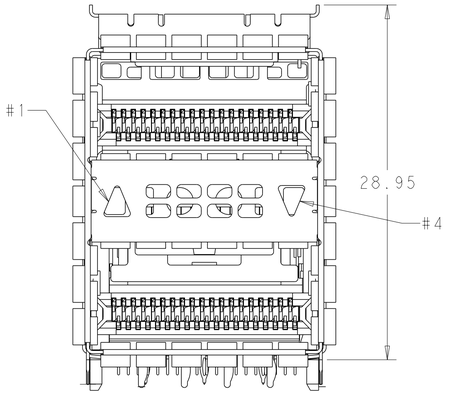

2-2227669-0
LEFT INDICATOR UP
SCALE 4:1

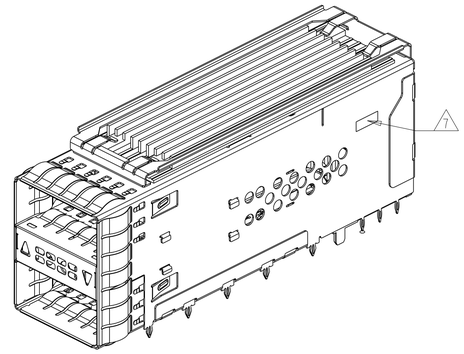

2-2227669-0
SCALE 2:1

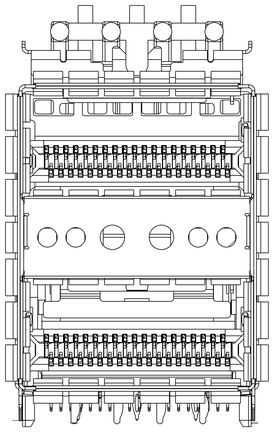

2-2227669-1
SCALE 4:1

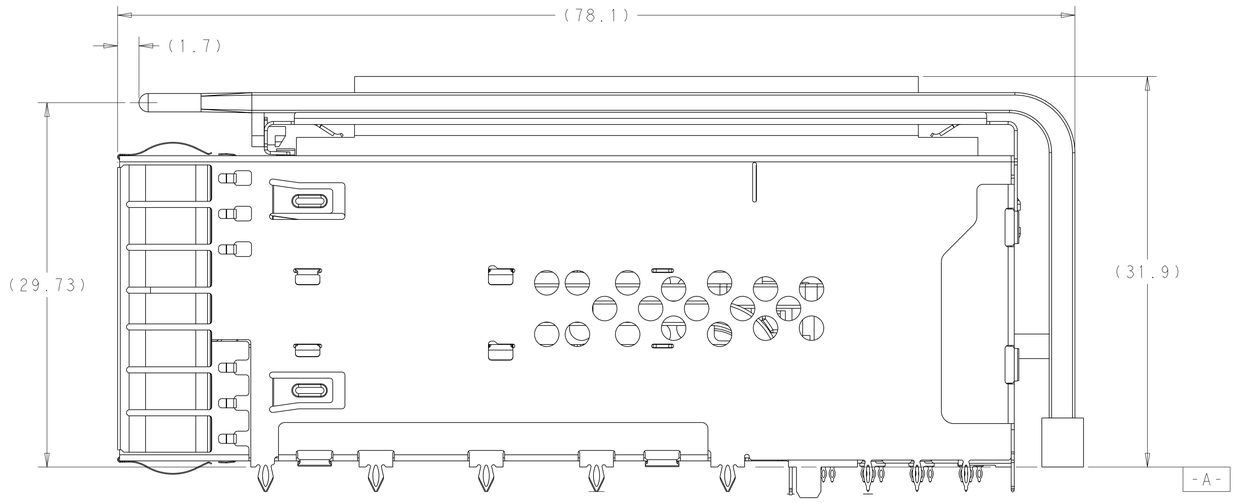

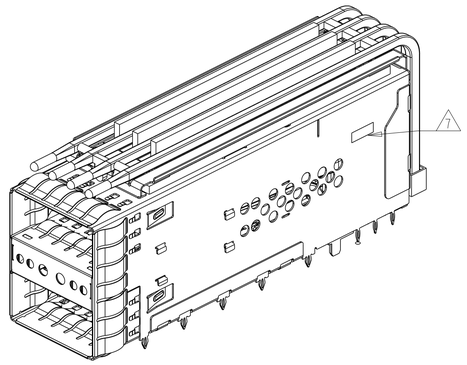

2-2227669-1
SCALE 2:1

THIS DRAWING IS A CONTROLLED DOCUMENT.

DIMENSIONS: mm

TOLERANCES UNLESS OTHERWISE SPECIFIED:
0 PLC ±-
1 PLC ±0.25
2 PLC ±0.15
3 PLC ±-
4 PLC ±-
ANGLES ±-

MATERIAL - SEE NOTE 1
FINISH - -

DWN M.SHIRK 16JAN2013
CHK D.SZCZESNY 16JAN2013
APVD - -
PRODUCT SPEC 108-60102
APPLICATION SPEC 114-60015
WEIGHT -

TE Connectivity

NAME CAGE AND CONNECTOR ASSEMBLY, WITH EMI SPRING FINGERS, THRU BEZEL, 2X1, ZQSFP+ STACKED

SIZE	CAGE CODE	DRAWING NO	RESTRICTED TO
A1	00779	C-2227669	-

CUSTOMER DRAWING SCALE 4:1 SHEET 2 OF 6 REV C1

4805 (3/11)

THIS DRAWING IS UNPUBLISHED. RELEASED FOR PUBLICATION 20
© COPYRIGHT 20 BY TYCO ELECTRONICS CORPORATION ALL RIGHTS RESERVED.

LOC	DIST
GP	00

REVISIONS

P	LTR	DESCRIPTION	DATE	DWN	APVD
	-	SEE SHEET 1	-	-	-

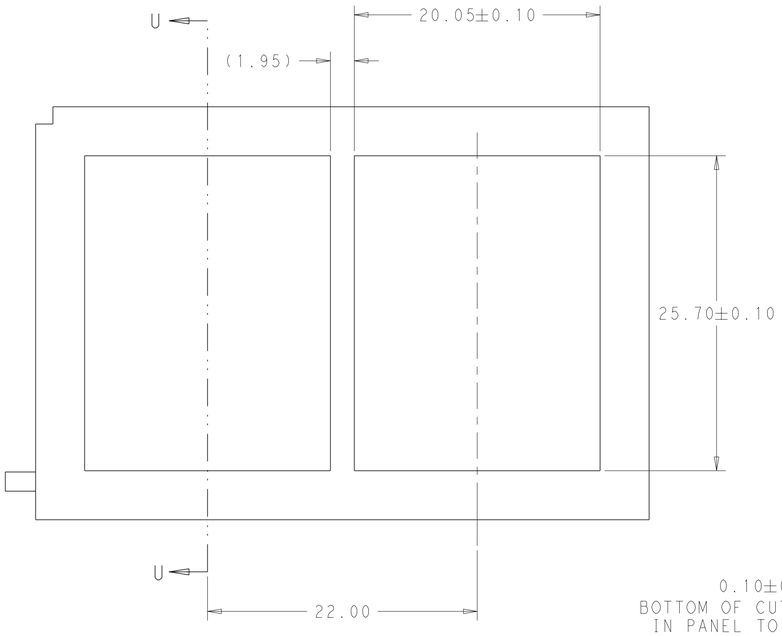

RECOMMENDED PANEL CUTOUT
AND PC BOARD, PANEL POSITION

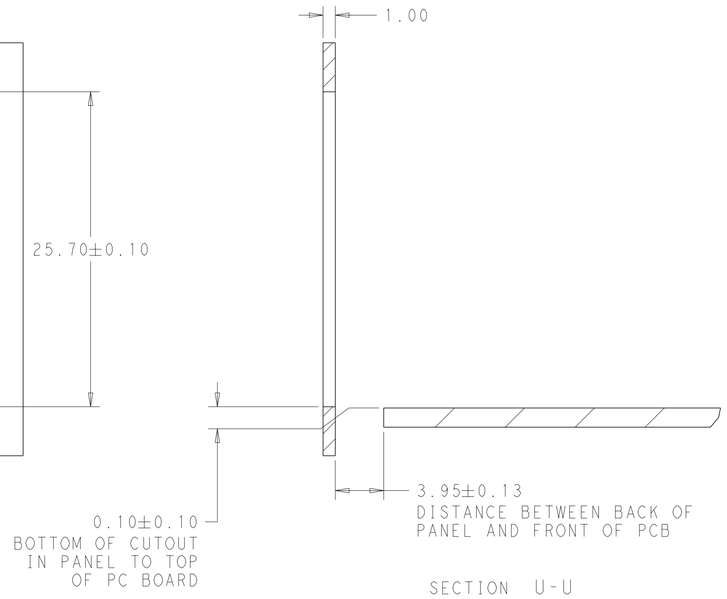

SECTION U-U

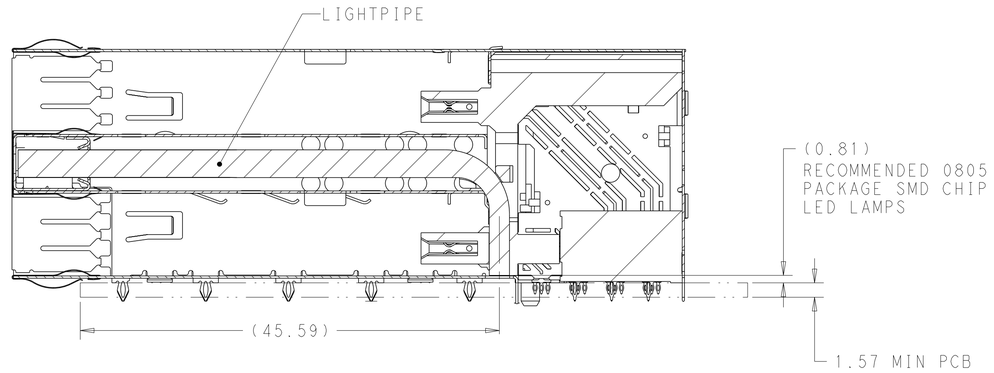

SECTION V-V
SCALE 3:1

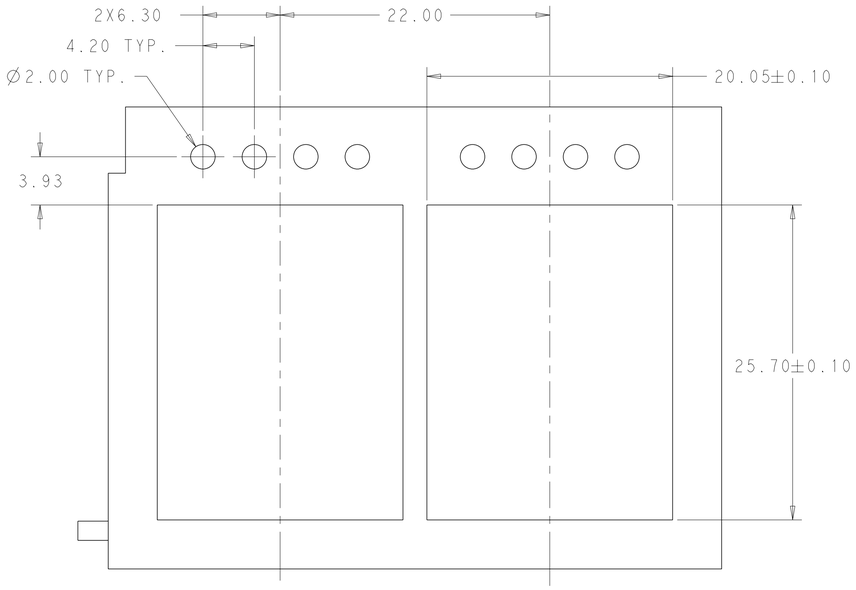

RECOMMENDED PANEL CUTOUT
AND PC BOARD, PANEL POSITION
FOR 2-2227669-1
SCALE 4:1

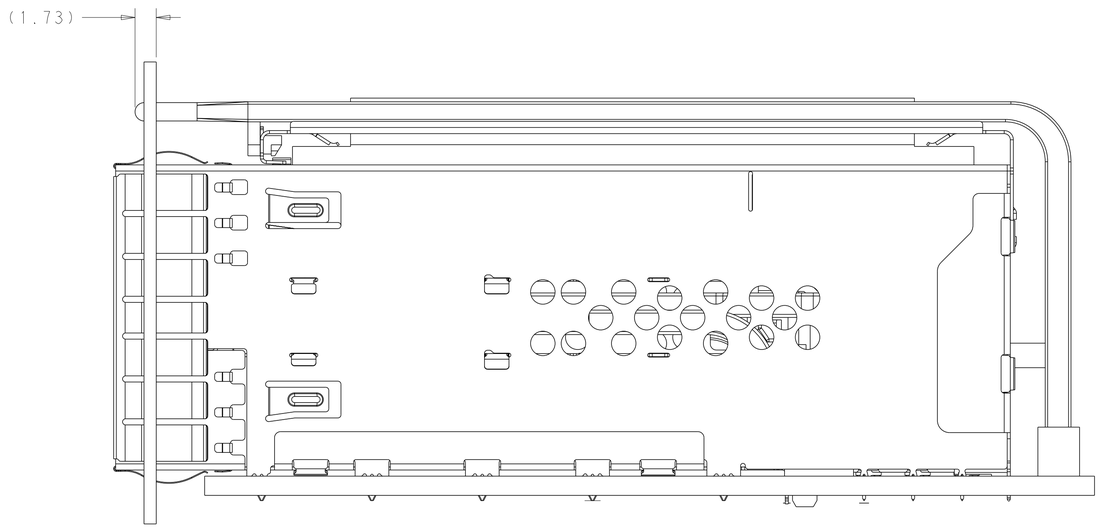

THIS DRAWING IS A CONTROLLED DOCUMENT.

DIMENSIONS: mm

TOLERANCES UNLESS OTHERWISE SPECIFIED:
0 PLC ±-
1 PLC ±0.25
2 PLC ±0.15
3 PLC ±-
4 PLC ±-
ANGLES ±-

MATERIAL - SEE NOTE 1
FINISH - -

DWN M.SHIRK 16JAN2013
CHK D.SZCZESNY 16JAN2013
APVD - -
PRODUCT SPEC 108-60102
APPLICATION SPEC 114-60015
WEIGHT -

TE Connectivity

NAME CAGE AND CONNECTOR ASSEMBLY, WITH EMI SPRING FINGERS, THRU BEZEL, 2X1, ZQSFP+ STACKED

SIZE	CAGE CODE	DRAWING NO	RESTRICTED TO
A1	00779	C-2227669	-

CUSTOMER DRAWING SCALE 4:1 SHEET 3 OF 6 REV C1

4805 (3/11)

THIS DRAWING IS UNPUBLISHED. RELEASED FOR PUBLICATION 20
© COPYRIGHT 20 BY TYCO ELECTRONICS CORPORATION ALL RIGHTS RESERVED.

LOC	DIST
GP	00

REVISIONS

P	LTR	DESCRIPTION	DATE	DWN	APVD
	-	SEE SHEET 1	-	-	-

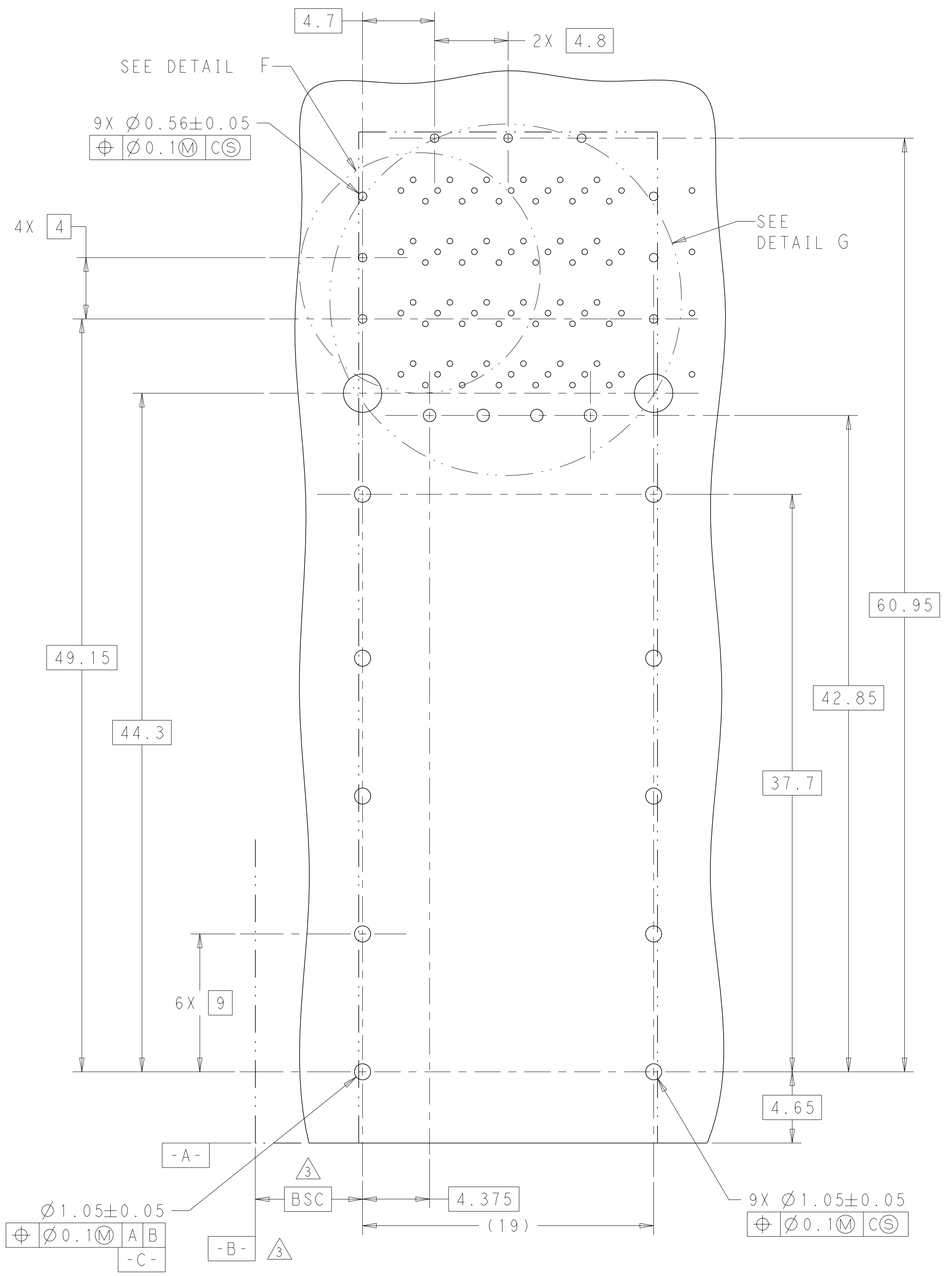

RECOMMENDED PC BOARD LAYOUT
COMPONENT SIDE OF BOARD
SCALE 5:1
(PCB TOLERANCE: ±0.05)

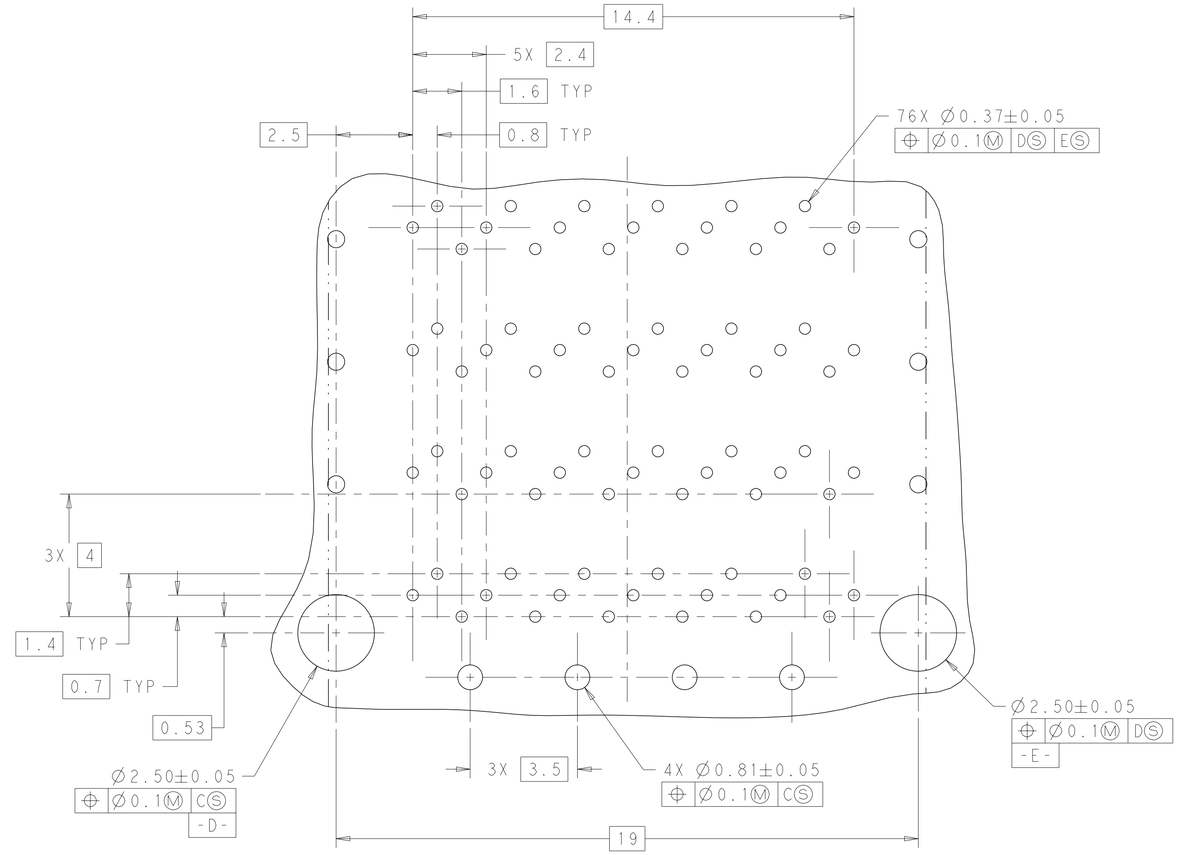

DETAIL G
SCALE 10:1

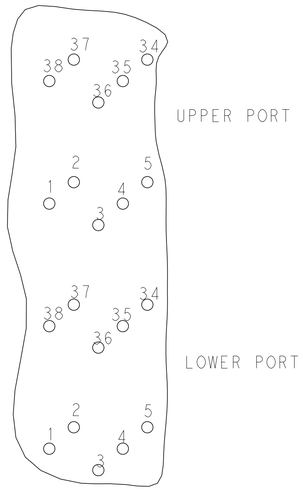

DETAIL F
SCALE 10:1
PIN ASSIGNMENTS

THIS DRAWING IS A CONTROLLED DOCUMENT.

DIMENSIONS: mm

TOLERANCES UNLESS OTHERWISE SPECIFIED:
0 PLC ±-
1 PLC ±0.25
2 PLC ±0.15
3 PLC ±-
4 PLC ±-
ANGLES ±-

MATERIAL - SEE NOTE 1
FINISH - -

DWN M.SHIRK 16JAN2013
CHK D.SZCZESNY 16JAN2013
APVD -
PRODUCT SPEC 108-60102
APPLICATION SPEC 114-60015
WEIGHT -

TE Connectivity

NAME CAGE AND CONNECTOR ASSEMBLY, WITH EMI SPRING FINGERS, THRU BEZEL, 2X1, ZQSFP+ STACKED

SIZE A1 | CAGE CODE 00779 | DRAWING NO C-2227669 | RESTRICTED TO -

CUSTOMER DRAWING | SCALE 4:1 | SHEET 4 OF 6 | REV C1

4805 (3/11)

THIS DRAWING IS UNPUBLISHED. RELEASED FOR PUBLICATION 20
© COPYRIGHT 20 BY TYCO ELECTRONICS CORPORATION ALL RIGHTS RESERVED.

LOC	DIST
GP	00

REVISIONS

P	LTR	DESCRIPTION	DATE	DWN	APVD
	-	SEE SHEET 1	-	-	-

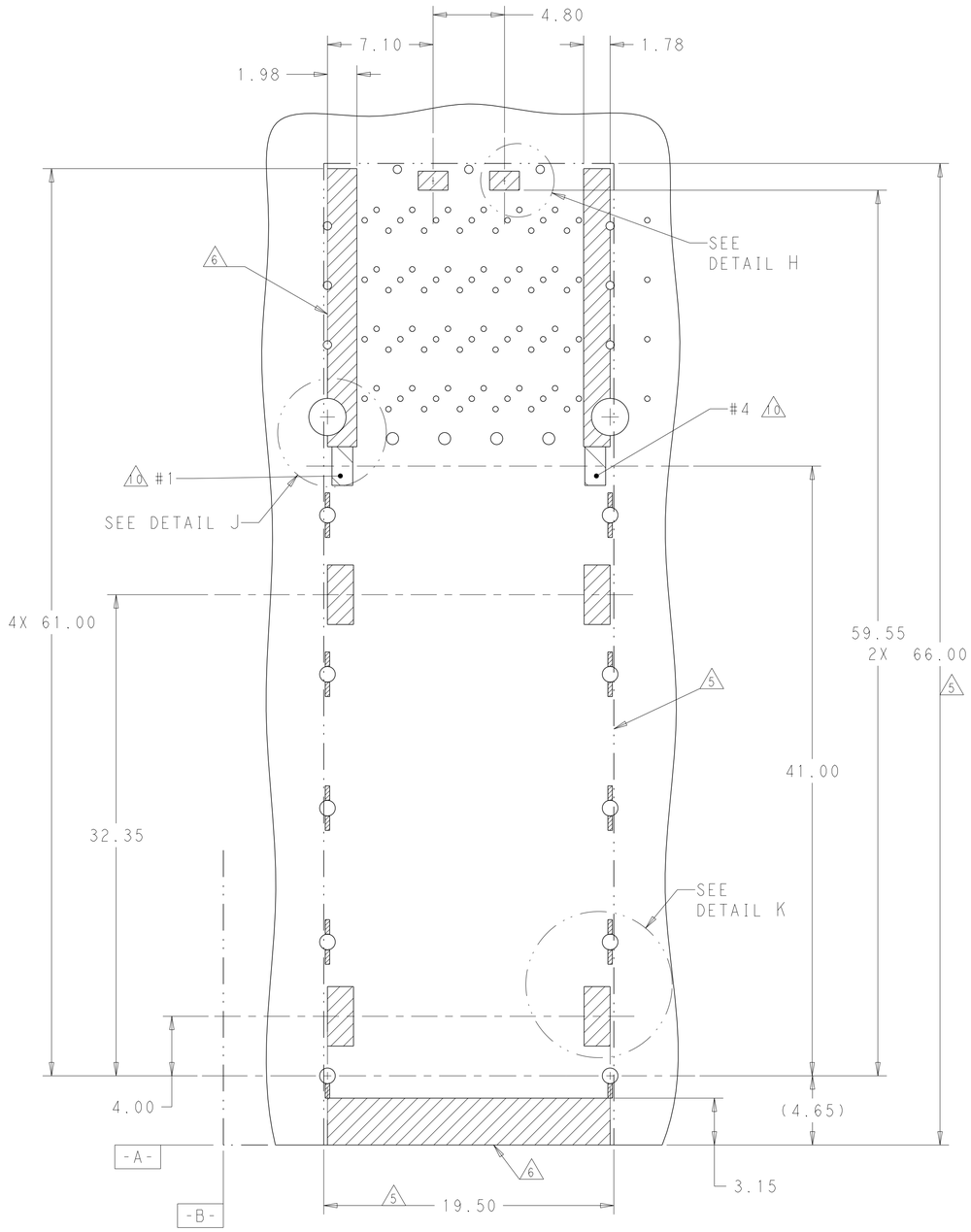

KEEPOUT AREAS FOR 2LP APPLICATION
COMPONENT SIDE OF BOARD
SCALE 5:1

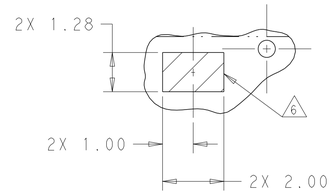

DETAIL H
SCALE 10:1

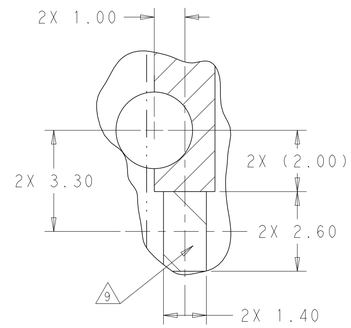

DETAIL J
LED PADS
SCALE 10:1

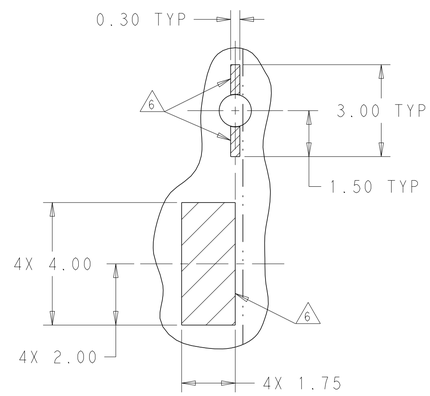

DETAIL K
SCALE 10:1

THIS DRAWING IS A CONTROLLED DOCUMENT.

DIMENSIONS: mm

TOLERANCES UNLESS OTHERWISE SPECIFIED:
0 PLC ±-
1 PLC ±0.25
2 PLC ±0.15
3 PLC ±-
4 PLC ±-
ANGLES ±-

MATERIAL - SEE NOTE 1
FINISH - -

DWN M.SHIRK 16JAN2013
CHK D.SZCZESNY 16JAN2013
APVD -
PRODUCT SPEC 108-60102
APPLICATION SPEC 114-60015
WEIGHT -

TE Connectivity

NAME CAGE AND CONNECTOR ASSEMBLY, WITH EMI SPRING FINGERS, THRU BEZEL, 2X1, ZQSFP+ STACKED

SIZE	CAGE CODE	DRAWING NO	RESTRICTED TO
A1	00779	C-2227669	-

CUSTOMER DRAWING | SCALE 4:1 | SHEET 5 OF 6 | REV C1

4805 (3/11)

THIS DRAWING IS UNPUBLISHED. RELEASED FOR PUBLICATION 20
© COPYRIGHT 20 BY TYCO ELECTRONICS CORPORATION ALL RIGHTS RESERVED.

LOC	DIST
GP	00

REVISIONS

P	LTR	DESCRIPTION	DATE	DWN	APVD
	-	SEE SHEET 1	-	-	-

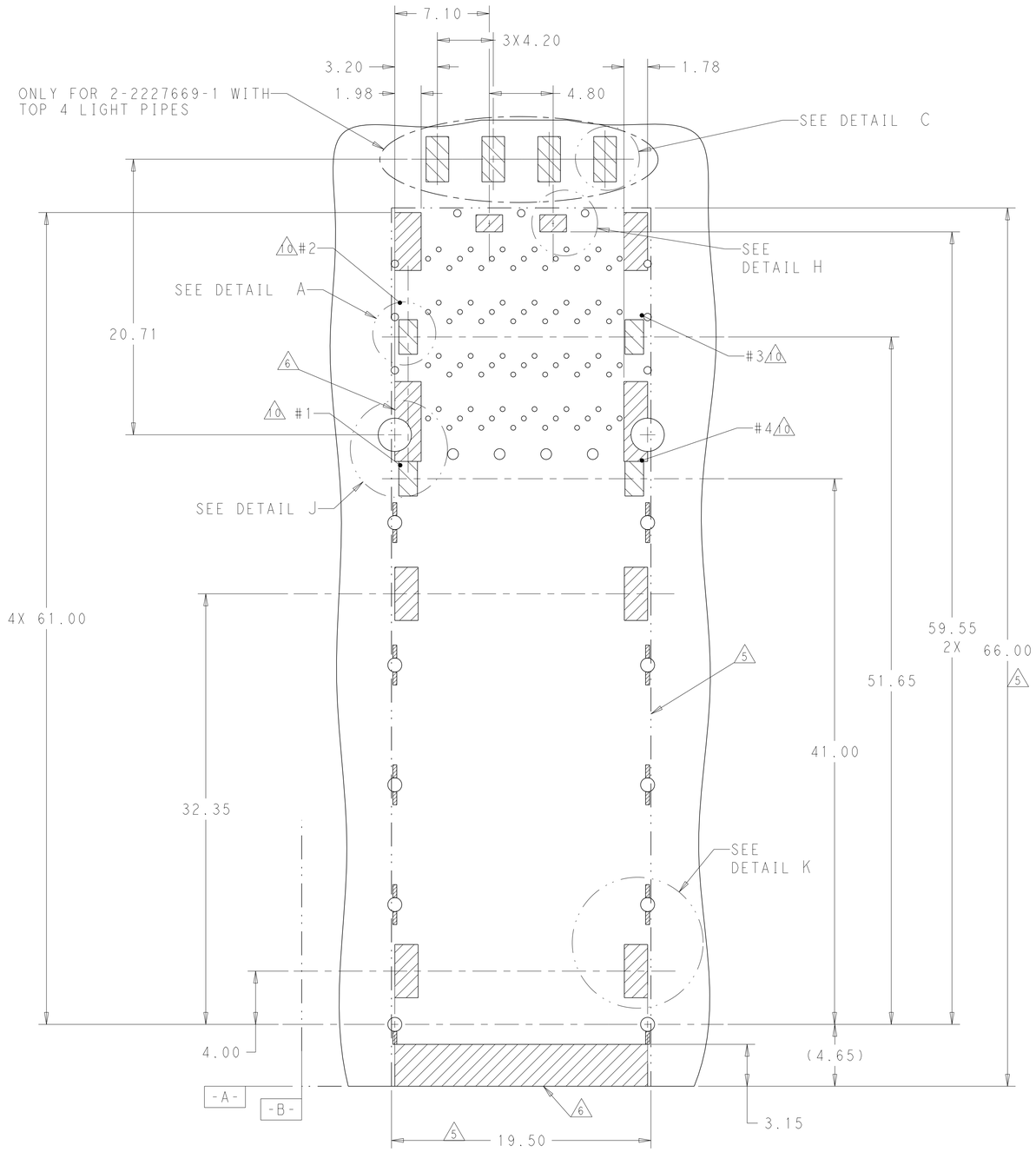

KEEPOUT AREAS FOR 4 LP APPLICATON
COMPONENT SIDE OF BOARD
SCALE 5:1

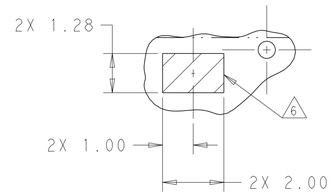

DETAIL H
SCALE 10:1

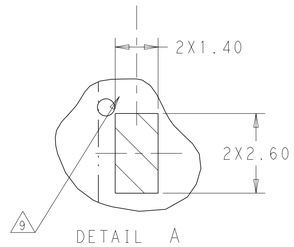

DETAIL A
SCALE 10:1

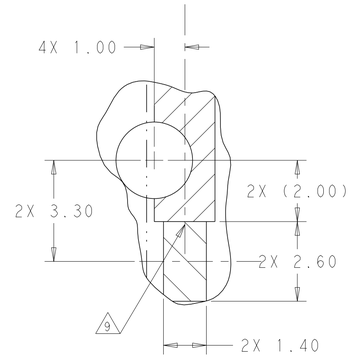

DETAIL J
LED PADS
SCALE 10:1

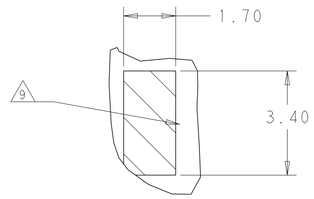

DETAIL C
SCALE 10:1

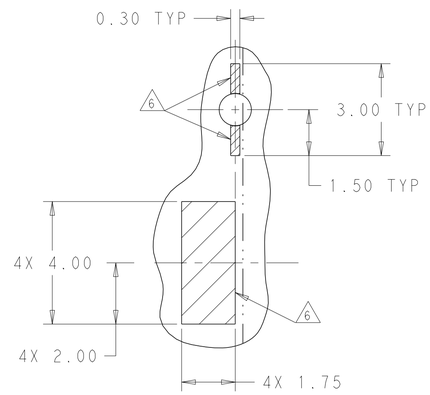

DETAIL K
SCALE 10:1

THIS DRAWING IS A CONTROLLED DOCUMENT.

DIMENSIONS: mm

TOLERANCES UNLESS OTHERWISE SPECIFIED:
0 PLC ±-
1 PLC ±0.25
2 PLC ±0.15
3 PLC ±-
4 PLC ±-
ANGLES ±-

MATERIAL - SEE NOTE 1
FINISH - -

DWN M.SHIRK 16JAN2013
CHK D.SZCZESNY 16JAN2013
APVD - -
PRODUCT SPEC 108-60102
APPLICATION SPEC 114-60015
WEIGHT -

TE Connectivity

NAME CAGE AND CONNECTOR ASSEMBLY, WITH EMI SPRING FINGERS, THRU BEZEL, 2X1, ZQSFP+ STACKED

SIZE A1 | CAGE CODE 00779 | DRAWING NO C-2227669 | RESTRICTED TO -

CUSTOMER DRAWING | SCALE 1:1 | SHEET 6 OF 6 | REV C1

4805 (3/11)

ООО «ЛайфЭлектроникс» “LifeElectronics” LLC

ИНН 7805602321 КПП 780501001 Р/С 40702810122510004610 ФАКБ "АБСОЛЮТ БАНК" (ЗАО) в г.Санкт-Петербурге К/С 30101810900000000703 БИК 044030703

Компания «Life Electronics» занимается поставками электронных компонентов импортного и отечественного производства от производителей и со складов крупных дистрибьюторов Европы, Америки и Азии.

С конца 2013 года компания активно расширяет линейку поставок компонентов по направлению коаксиальный кабель, кварцевые генераторы и конденсаторы (керамические, пленочные, электролитические), за счёт заключения дистрибьюторских договоров

Мы предлагаем:

- *Конкурентоспособные цены и скидки постоянным клиентам.*
- *Специальные условия для постоянных клиентов.*
- *Подбор аналогов.*
- *Поставку компонентов в любых объемах, удовлетворяющих вашим потребностям.*

- *Приемлемые сроки поставки, возможна ускоренная поставка.*
- *Доставку товара в любую точку России и стран СНГ.*
- *Комплексную поставку.*
- *Работу по проектам и поставку образцов.*
- *Формирование склада под заказчика.*

- *Сертификаты соответствия на поставляемую продукцию (по желанию клиента).*
- *Тестирование поставляемой продукции.*
- *Поставку компонентов, требующих военную и космическую приемку.*
- *Входной контроль качества.*
- *Наличие сертификата ISO.*

В составе нашей компании организован Конструкторский отдел, призванный помогать разработчикам, и инженерам.

Конструкторский отдел помогает осуществить:

- *Регистрацию проекта у производителя компонентов.*
- *Техническую поддержку проекта.*
- *Защиту от снятия компонента с производства.*
- *Оценку стоимости проекта по компонентам.*
- *Изготовление тестовой платы монтаж и пусконаладочные работы.*

Тел: +7 (812) 336 43 04 (многоканальный)
Email: org@lifeelectronics.ru

www.lifeelectronics.ru