Tel: 886-2-29162151
Fax: 886-2-29174598
URL: *http://www.princeton.com.tw*

Infrared Remote Control Transmitter PT2560

Description

PT2560 is an infrared remote control transmitter utilizing CMOS technology housed in a 20-pin DIP or SO package. A 4 x 8 key matrix and extension bit inputs allow the transmission of up to 256 instructions. The transmission code consists of 16 bits code (8 bits custom code and 8 bits data code) and a leader code. PT2560 is functionally compatible with M50560. However, there is a slight difference in their application circuits. If you are to replace M50560 with PT2560, you do not need to connect an external capacitor to Pin No.3 (SEL Pin).

Pin assignments and application circuit of PT2560 are optimized for easy PCB layout and cost saving advantage for remote control applications.

Features

- ❑ CMOS Technology
- ❑ Low Power Consumption: 2.0 ~ 4.0 V
- ❑ Least External Components
- ❑ LED Power Dissipation is less during the transmission of instructions

Applications

- ❑ Audio Equipment
- ❑ Television
- ❑ Video Cassette Recorder
- ❑ Air Conditioner

Pin Configuration

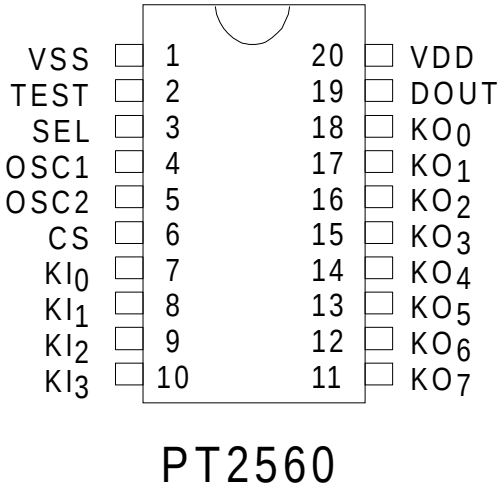

Order Information

Valid Part Number	Package
PT2560-001	20 Pins, DIP Package (300 mil)
PT2560S-001	20 Pins, SO Package (300 mil)
PT2560-002	20 Pins, DIP Package (300 mil)
PT2560S-002	20 Pins, SO Package (300mil)
PT2560-003	20 Pins, DIP Package (300 mil)
PT2560S-003	20 Pins, SO Package (300 mil)

Application Circuit 1

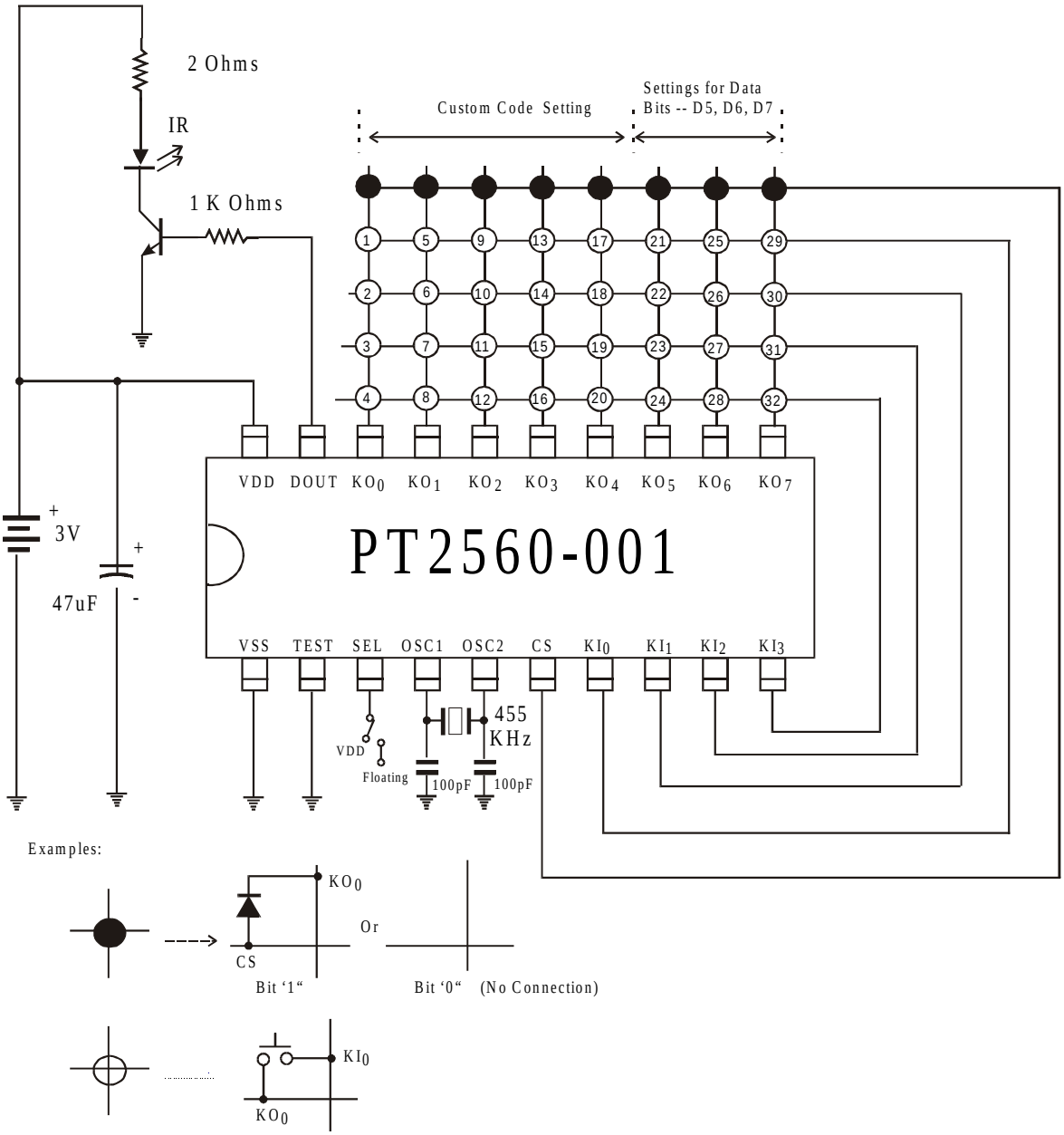

Note: Please take note that if you are replacing M50560 with PT2560, you do not need to connect an external capacitor to PT2560's Pin No. 3 (SEL PIN). PT2560 SEL Pin must either be "floating' or connected to VDD.

Application Circuit 2

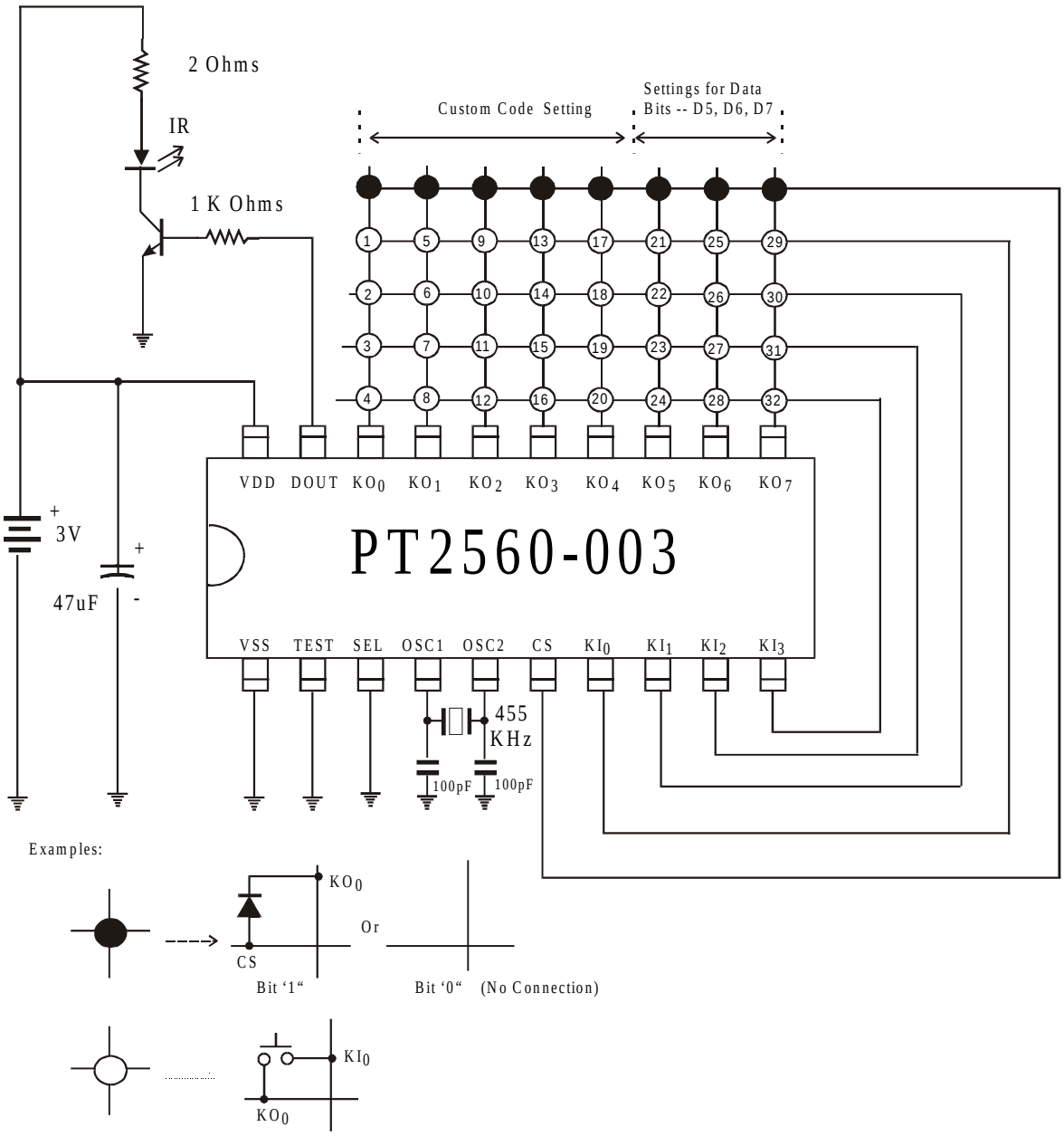

Note: Please take note that if you are replacing M50560 with PT2560, you do not need to connect an external capacitor to PT2560's Pin No. 3 (SEL PIN). PT2560 SEL Pin must be connected to the Ground.

Application Circuit 1 & 2 Key Table

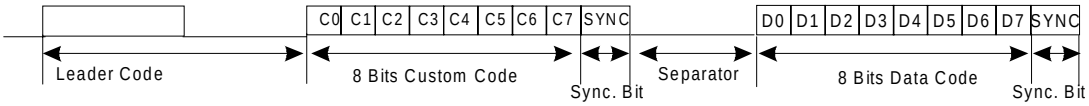

PT2560-001/ PT2560-003 Custom Code Table for Application Circuit 1/2

Input	KO Lines					Custom Codes							
CS	KO_0	KO_1	KO_2	KO_3	KO_4	C0	C1	C2	C3	C4	C5	C6	C7
						0	0	0	0	0	0/1	0	0
*	*					1	0	0	0	0	0/1	0	0
*		*				0	1	0	0	0	0/1	0	0
*	*	*				1	1	0	0	0	0/1	0	0
*			*			0	0	1	0	0	0/1	0	0
*	*		*			1	0	1	0	0	0/1	0	0
*		*	*			0	1	1	0	0	0/1	0	0
*	*	*	*			1	1	1	0	0	0/1	0	0
*				*		0	0	0	1	0	0/1	0	0
*	*			*		1	0	0	1	0	0/1	0	0
*		*		*		0	1	0	1	0	0/1	0	0
*	*	*		*		1	1	0	1	0	0/1	0	0
*			*	*		0	0	1	1	0	0/1	0	0
*	*		*	*		1	0	1	1	0	0/1	0	0
*		*	*	*		0	1	1	1	0	0/1	0	0
*	*	*	*	*		1	1	1	1	0	0/1	0	0
*					*	0	0	0	0	1	0/1	0	0
*	*				*	1	0	0	0	1	0/1	0	0
*		*			*	0	1	0	0	1	0/1	0	0
*	*	*			*	1	1	0	0	1	0/1	0	0
*			*		*	0	0	1	0	1	0/1	0	0
*	*		*		*	1	0	1	0	1	0/1	0	0
*		*	*		*	0	1	1	0	1	0/1	0	0
*	*	*	*		*	1	1	1	0	1	0/1	0	0
*				*	*	0	0	0	1	1	0/1	0	0
*	*			*	*	1	0	0	1	1	0/1	0	0
*		*		*	*	0	1	0	1	1	0/1	0	0
*	*	*		*	*	1	1	0	1	1	0/1	0	0
*			*	*	*	0	0	1	1	1	0/1	0	0
*	*		*	*	*	1	0	1	1	1	0/1	0	0
*		*	*	*	*	0	1	1	1	1	0/1	0	0
*	*	*	*	*	*	1	1	1	1	1	0/1	0	0

Note: * = CS connected to the respective KO Line
For PT2560-001, Custom Code Bit 5 (C5) = “0”.
For PT2560-003 Custom Code Bit 5 (C5) = “1”.

PT2560-001/PT2560-003 Data Code Table for Application Circuit 1/2

No.	KI Lines				KO Lines								Data Code				
	KI_0	KI_1	KI_2	KI_3	KO_0	KO_1	KO_2	KO_3	KO_4	KO_5	KO_6	KO_7	D0	D1	D2	D3	D4
1	*				*								0	0	0	0	0
2		*			*								1	0	0	0	0
3			*		*								0	1	0	0	0
4				*	*								1	1	0	0	0
5	*					*							0	0	1	0	0
6		*				*							1	0	1	0	0
7			*			*							0	1	1	0	0
8				*		*							1	1	1	0	0
9	*						*						0	0	0	1	0
10		*					*						1	0	0	1	0
11			*				*						0	1	0	1	0
12				*			*						1	1	0	1	0
13	*							*					0	0	1	1	0
14		*						*					1	0	1	1	0
15			*					*					0	1	1	1	0
16				*				*					1	1	1	1	0
17	*								*				0	0	0	0	1
18		*							*				1	0	0	0	1
19			*						*				0	1	0	0	1
20				*					*				1	1	0	0	1
21	*									*			0	0	1	0	1
22		*								*			1	0	1	0	1
23			*							*			0	1	1	0	1
24				*						*			1	1	1	0	1
25	*										*		0	0	0	1	1
26		*									*		1	0	0	1	1
27			*								*		0	1	0	1	1
28				*							*		1	1	0	1	1
29	*											*	0	0	1	1	1
30		*										*	1	0	1	1	1
31			*									*	0	1	1	1	1
32				*								*	1	1	1	1	1

Input	KO Lines			Data Code		
CS	KO_5	KO_6	KO_7	D5	D6	D7
				0	0	0
*	*			1	0	0
*		*		0	1	0
*	*	*		1	1	0
*			*	0	0	1
*	*		*	1	0	1
*		*	*	0	1	1
*	*	*	*	1	1	1

Application Circuit 3

(Extended Codes)

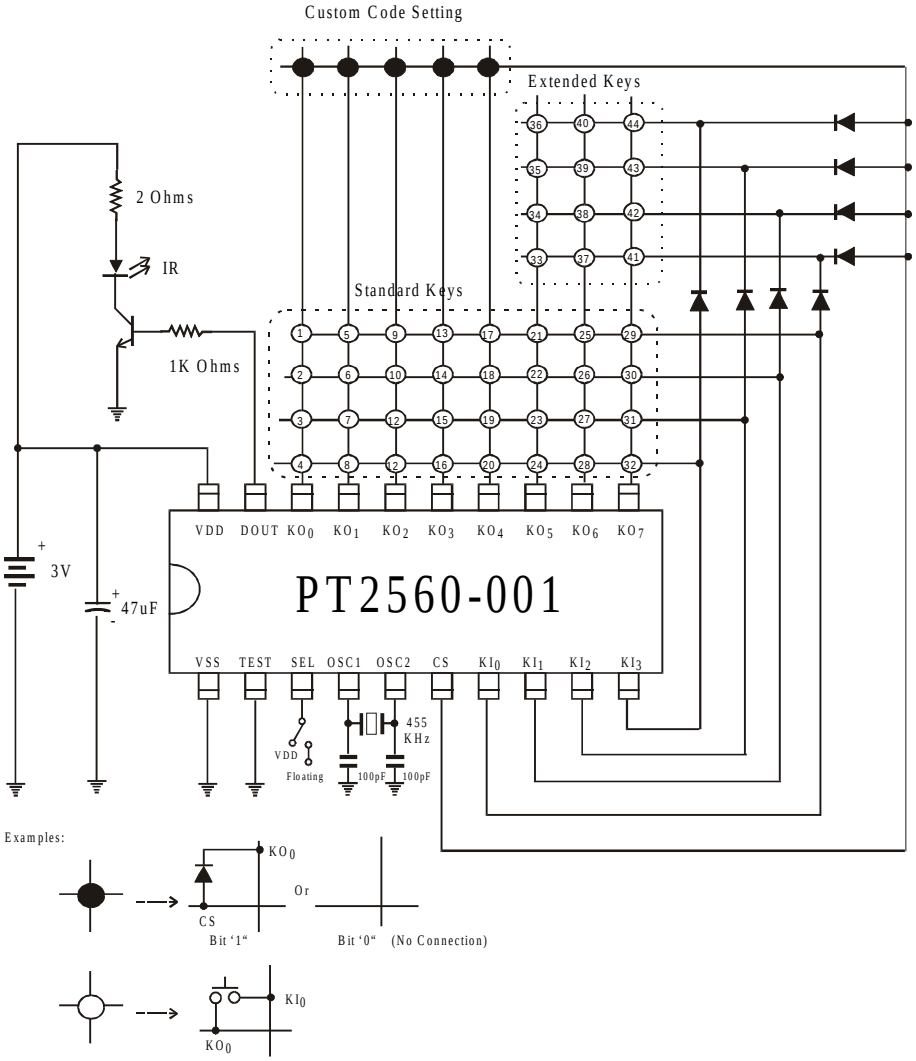

Note: Please take note that if you are replacing M50560 with PT2560, you do not need to connect an external capacitor to PT2560's Pin No. 3 (SEL PIN). PT2560 SEL Pin must either be "floating" or connected to VDD.

Application Circuit 4

(Extended Codes)

Note: Please take note that if you are replacing M50560 with PT2560, you do not need to connect an external capacitor to PT2560's Pin No. 3 (SEL PIN). PT2560 SEL Pin must connected to the Ground.

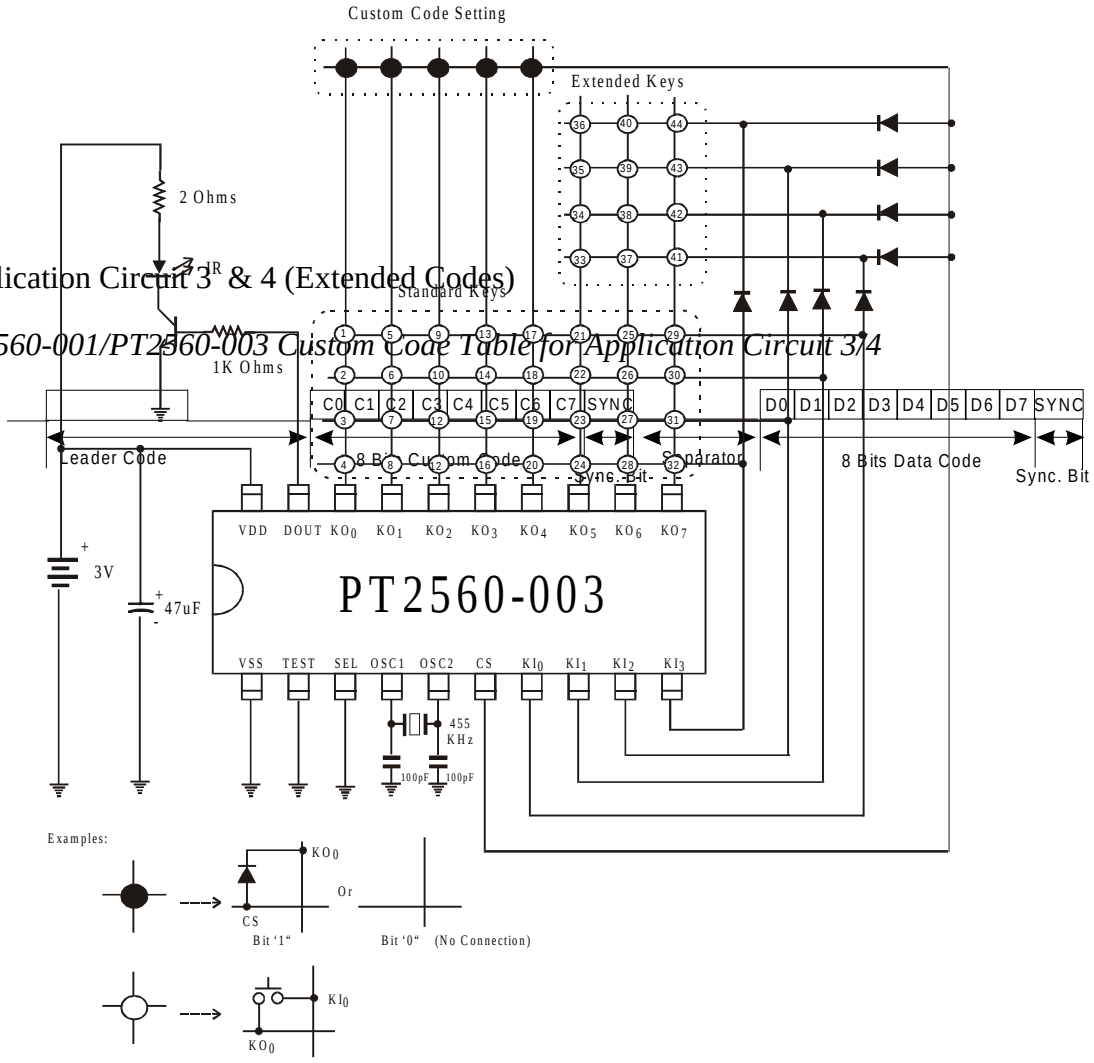

Application Circuit 3 & 4 (Extended Codes)

PT2560-001/PT2560-003 Custom Code Table for Application Circuit 3/4

Input	KO Lines					Custom Codes							
CS	KO_0	KO_1	KO_2	KO_3	KO_4	C0	C1	C2	C3	C4	C5	C6	C7
						0	0	0	0	0	0/1	0	0
*	*					1	0	0	0	0	0/1	0	0
*		*				0	1	0	0	0	0/1	0	0
*	*	*				1	1	0	0	0	0/1	0	0
*			*			0	0	1	0	0	0/1	0	0
*	*		*			1	0	1	0	0	0/1	0	0
*		*	*			0	1	1	0	0	0/1	0	0
*	*	*	*			1	1	1	0	0	0/1	0	0
*				*		0	0	0	1	0	0/1	0	0
*	*			*		1	0	0	1	0	0/1	0	0
*		*		*		0	1	0	1	0	0/1	0	0
*	*	*		*		1	1	0	1	0	0/1	0	0
*			*	*		0	0	1	1	0	0/1	0	0
*	*		*	*		1	0	1	1	0	0/1	0	0
*		*	*	*		0	1	1	1	0	0/1	0	0
*	*	*	*	*		1	1	1	1	0	0/1	0	0
*					*	0	0	0	0	1	0/1	0	0
*	*				*	1	0	0	0	1	0/1	0	0
*		*			*	0	1	0	0	1	0/1	0	0
*	*	*			*	1	1	0	0	1	0/1	0	0
*			*		*	0	0	1	0	1	0/1	0	0
*	*		*		*	1	0	1	0	1	0/1	0	0
*		*	*		*	0	1	1	0	1	0/1	0	0
*	*	*	*		*	1	1	1	0	1	0/1	0	0
*				*	*	0	0	0	1	1	0/1	0	0
*	*			*	*	1	0	0	1	1	0/1	0	0
*		*		*	*	0	1	0	1	1	0/1	0	0
*	*	*		*	*	1	1	0	1	1	0/1	0	0
*			*	*	*	0	0	1	1	1	0/1	0	0
*	*		*	*	*	1	0	1	1	1	0/1	0	0
*		*	*	*	*	0	1	1	1	1	0/1	0	0
*	*	*	*	*	*	1	1	1	1	1	0/1	0	0

Note: * = CS is connected to the respective KO Line.
For PT2650-001, Custom Code Bit 5 (C5) = “0”.
For PT2560-003, Custom Code Bit 5 (C5) = “1”.

PT2560-001/PT2560-003 Data Code Table for Application Circuit 3/4

No.	KI Lines				KO Lines								Data Code				
	KI_0	KI_1	KI_2	KI_3	KO_0	KO_1	KO_2	KO_3	KO_4	KO_5	KO_6	KO_7	D0	D1	D2	D3	D4
1	*				*								0	0	0	0	0
2		*			*								1	0	0	0	0
3			*		*								0	1	0	0	0
4				*	*								1	1	0	0	0
5	*					*							0	0	1	0	0
6		*				*							1	0	1	0	0
7			*			*							0	1	1	0	0
8				*		*							1	1	1	0	0
9	*						*						0	0	0	1	0
10		*					*						1	0	0	1	0
11			*				*						0	1	0	1	0
12				*			*						1	1	0	1	0
13	*							*					0	0	1	1	0
14		*						*					1	0	1	1	0
15			*					*					0	1	1	1	0
16				*				*					1	1	1	1	0
17	*								*				0	0	0	0	1
18		*							*				1	0	0	0	1
19			*						*				0	1	0	0	1
20				*					*				1	1	0	0	1
21	*									*			0	0	1	0	1
22		*								*			1	0	1	0	1
23			*							*			0	1	1	0	1
24				*						*			1	1	1	0	1
25	*										*		0	0	0	1	1
26		*									*		1	0	0	1	1
27			*								*		0	1	0	1	1
28				*							*		1	1	0	1	1
29	*											*	0	0	1	1	1
30		*										*	1	0	1	1	1
31			*									*	0	1	1	1	1
32				*								*	1	1	1	1	1

Input	KO Lines			Data Code		
CS	KO_5	KO_6	KO_7	D5	D6	D7
				0	0	0
*	*			1	0	0
*		*		0	1	0
*	*	*		1	1	0
*			*	0	0	1
*	*		*	1	0	1
*		*	*	0	1	1
*	*	*	*	1	1	1

PT2560-001/PT2560-003 Data Code Table for Application Circuit 3/4 (Extended Keys)

No.	Input	KI Lines				KO Lines			Data Code							
	CS	KI_0	KI_1	KI_2	KI_3	KO_5	KO_6	KO_7	D0	D1	D2	D3	D4	D5	D6	D7
33	*	*				*			0	0	1	0	1	1	0	0
34	*		*			*			1	0	1	0	1	1	0	0
35	*			*		*			0	1	1	0	1	1	0	0
36	*				*	*			1	1	1	0	1	1	0	0
37	*	*					*		0	0	0	1	1	0	1	0
38	*		*				*		1	0	0	1	1	0	1	0
39	*			*			*		0	1	0	1	1	0	1	0
40	*				*		*		1	1	0	1	1	0	1	0
41	*	*						*	0	0	1	1	1	0	0	1
42	*		*					*	1	0	1	1	1	0	0	1
43	*			*				*	0	1	1	1	1	0	0	1
44	*				*			*	1	1	1	1	1	0	0	1

Application Circuit 5

(Double Key Operation)

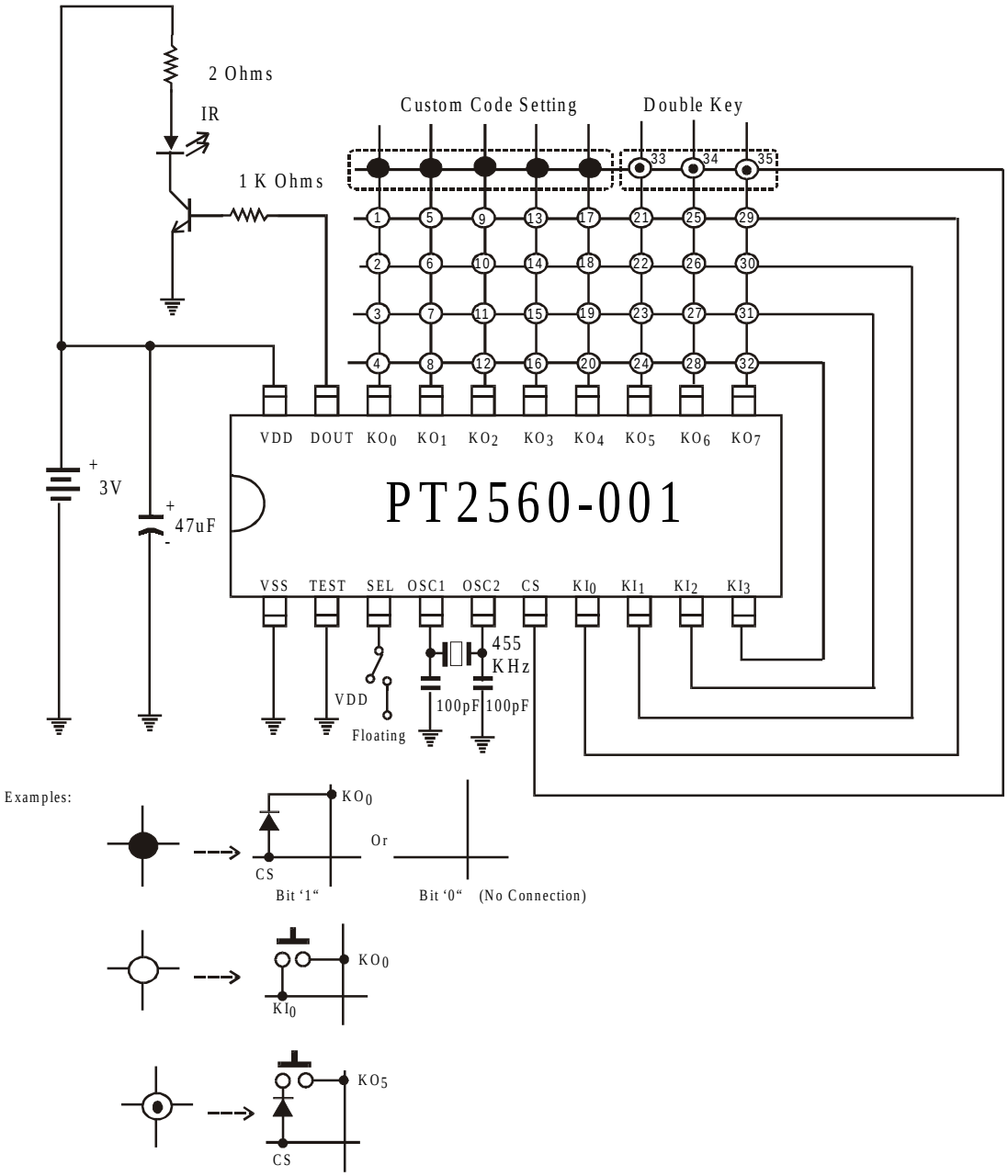

Note: Please take note that if you are replacing M50560 with PT2560, you do not need to connect an external capacitor to PT2560's Pin No. 3 (SEL PIN). PT2560 SEL Pin must either be "floating" or connected to VDD.

Application Circuit 6

(Double Key Operation)

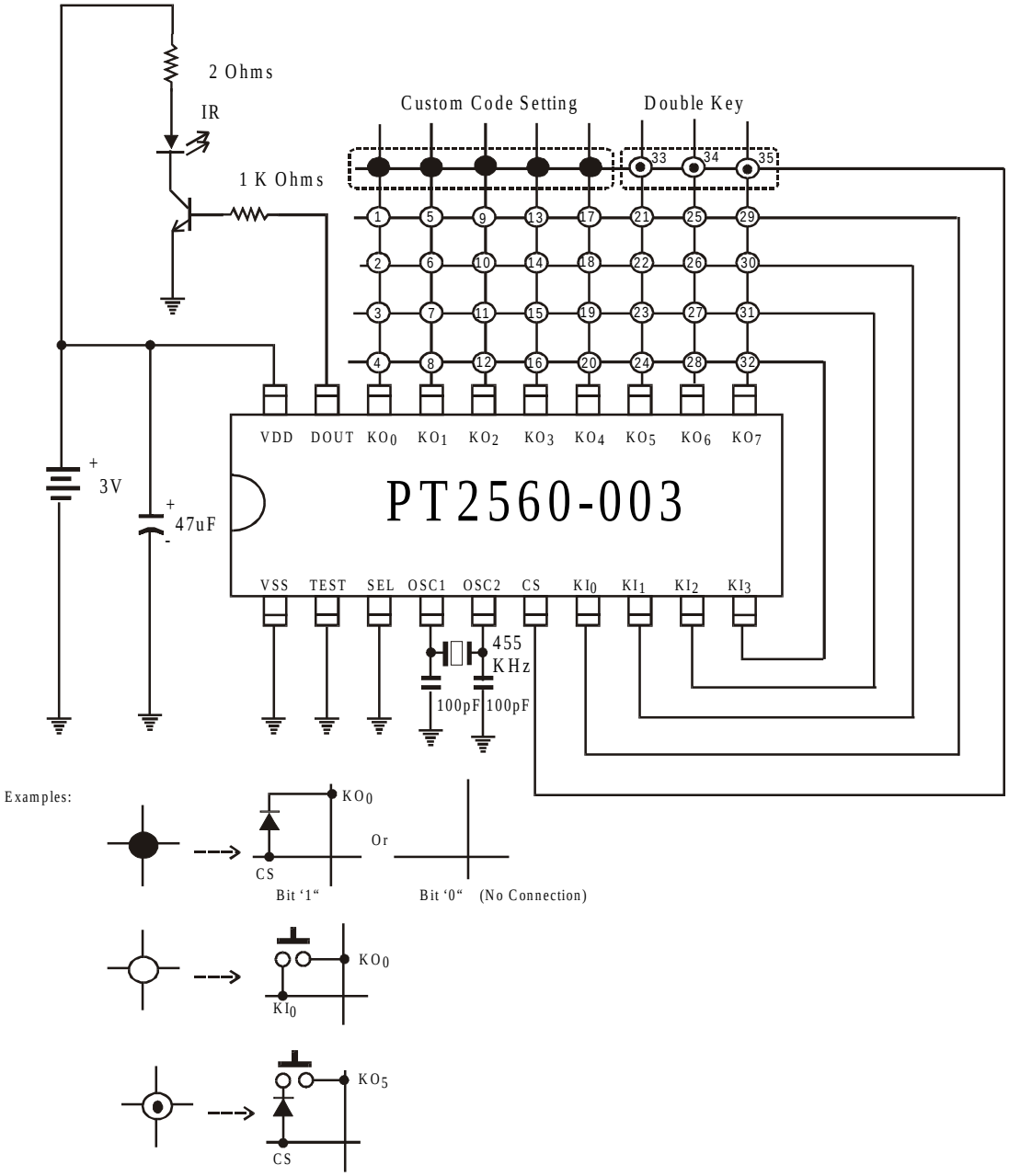

Note: Please take note that if you are replacing M50560 with PT2560, you do not need to connect an external capacitor to PT2560's Pin No. 3 (SEL PIN). PT2560 SEL Pin must be connected to the Ground.

Application Circuit 5 & 6 (Double Key Operation)

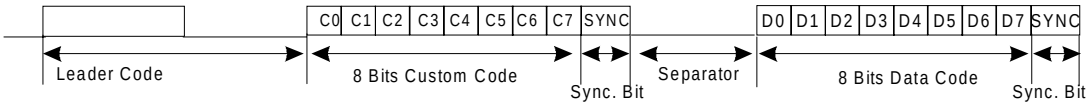

PT2560-001/PT2560-003 Custom Code Table for Application Circuit 5/6

Input	KO Lines					Custom Codes							
CS	KO_0	KO_1	KO_2	KO_3	KO_4	C0	C1	C2	C3	C4	C5	C6	C7
						0	0	0	0	0	0/1	0	0
*	*					1	0	0	0	0	0/1	0	0
*		*				0	1	0	0	0	0/1	0	0
*	*	*				1	1	0	0	0	0/1	0	0
*			*			0	0	1	0	0	0/1	0	0
*	*		*			1	0	1	0	0	0/1	0	0
*		*	*			0	1	1	0	0	0/1	0	0
*	*	*	*			1	1	1	0	0	0/1	0	0
*				*		0	0	0	1	0	0/1	0	0
*	*			*		1	0	0	1	0	0/1	0	0
*		*		*		0	1	0	1	0	0/1	0	0
*	*	*		*		1	1	0	1	0	0/1	0	0
*			*	*		0	0	1	1	0	0/1	0	0
*	*		*	*		1	0	1	1	0	0/1	0	0
*		*	*	*		0	1	1	1	0	0/1	0	0
*	*	*	*	*		1	1	1	1	0	0/1	0	0
*					*	0	0	0	0	1	0/1	0	0
*	*				*	1	0	0	0	1	0/1	0	0
*		*			*	0	1	0	0	1	0/1	0	0
*	*	*			*	1	1	0	0	1	0/1	0	0
*			*		*	0	0	1	0	1	0/1	0	0
*	*		*		*	1	0	1	0	1	0/1	0	0
*		*	*		*	0	1	1	0	1	0/1	0	0
*	*	*	*		*	1	1	1	0	1	0/1	0	0
*				*	*	0	0	0	1	1	0/1	0	0
*	*			*	*	1	0	0	1	1	0/1	0	0
*		*		*	*	0	1	0	1	1	0/1	0	0
*	*	*		*	*	1	1	0	1	1	0/1	0	0
*			*	*	*	0	0	1	1	1	0/1	0	0
*	*		*	*	*	1	0	1	1	1	0/1	0	0
*		*	*	*	*	0	1	1	1	1	0/1	0	0
*	*	*	*	*	*	1	1	1	1	1	0/1	0	0

Note: * = CS is connected to the respective KO Line.
For PT2650-001, Custom Code Bit 5 (C5) = “0”.
For PT2560-003, Custom Code Bit 5 (C5) = “1”.

PT2560-001/PT2560-003 Data Code Table for Application Circuit 5/6

No.	KI Lines				KO Lines								Data Code				
	KI_0	KI_1	KI_2	KI_3	KO_0	KO_1	KO_2	KO_3	KO_4	KO_5	KO_6	KO_7	D0	D1	D2	D3	D4
1	*				*								0	0	0	0	0
2		*			*								1	0	0	0	0
3			*		*								0	1	0	0	0
4				*	*								1	1	0	0	0
5	*					*							0	0	1	0	0
6		*				*							1	0	1	0	0
7			*			*							0	1	1	0	0
8				*		*							1	1	1	0	0
9	*						*						0	0	0	1	0
10		*					*						1	0	0	1	0
11			*				*						0	1	0	1	0
12				*			*						1	1	0	1	0
13	*							*					0	0	1	1	0
14		*						*					1	0	1	1	0
15			*					*					0	1	1	1	0
16				*				*					1	1	1	1	0
17	*								*				0	0	0	0	1
18		*							*				1	0	0	0	1
19			*						*				0	1	0	0	1
20				*					*				1	1	0	0	1
21	*									*			0	0	1	0	1
22		*								*			1	0	1	0	1
23			*							*			0	1	1	0	1
24				*						*			1	1	1	0	1
25	*										*		0	0	0	1	1
26		*									*		1	0	0	1	1
27			*								*		0	1	0	1	1
28				*							*		1	1	0	1	1
29	*											*	0	0	1	1	1
30		*										*	1	0	1	1	1
31			*									*	0	1	1	1	1
32				*								*	1	1	1	1	1

PT2560-001/PT2560-003 Data Code Table for Double Key Operation

Double Keys	Input	KO Lines			Data Code		
Key Nos.	CS	KO_5	KO_6	KO_7	D5	D6	D7
					0	0	0
33	*	*			1	0	0
34	*		*		0	1	0
33+34	*	*	*		1	1	0
35	*			*	0	0	1
33+35	*	*		*	1	0	1
34+35	*		*	*	0	1	1
33+34+35	*	*	*	*	1	1	1

Example 1: When the Double Key Operation is NOT used and the Key No. 2 is pressed, then the Data Code will be:

D0	D1	D2	D3	D4	D5	D6	D7
1	0	0	0	0	0	0	0

Take note that since the Double Key Operation is NOT used, the value of data bits D5, D6, and D7 is “0”.

Example 2: When only 1 Double Key (Key Nos. 33 + Key No. 2) is used, then the Data Code is

D0	D1	D2	D3	D4	D5	D6	D7
1	0	0	0	0	1	0	0

Example 3: When 2 Double Keys (Key Nos. [33 + 35] + Key No. 2) are used, the Data Code is

D0	D1	D2	D3	D4	D5	D6	D7
1	0	0	0	0	1	0	1

Application Circuit 7

(No Leader Code and Custom Code)

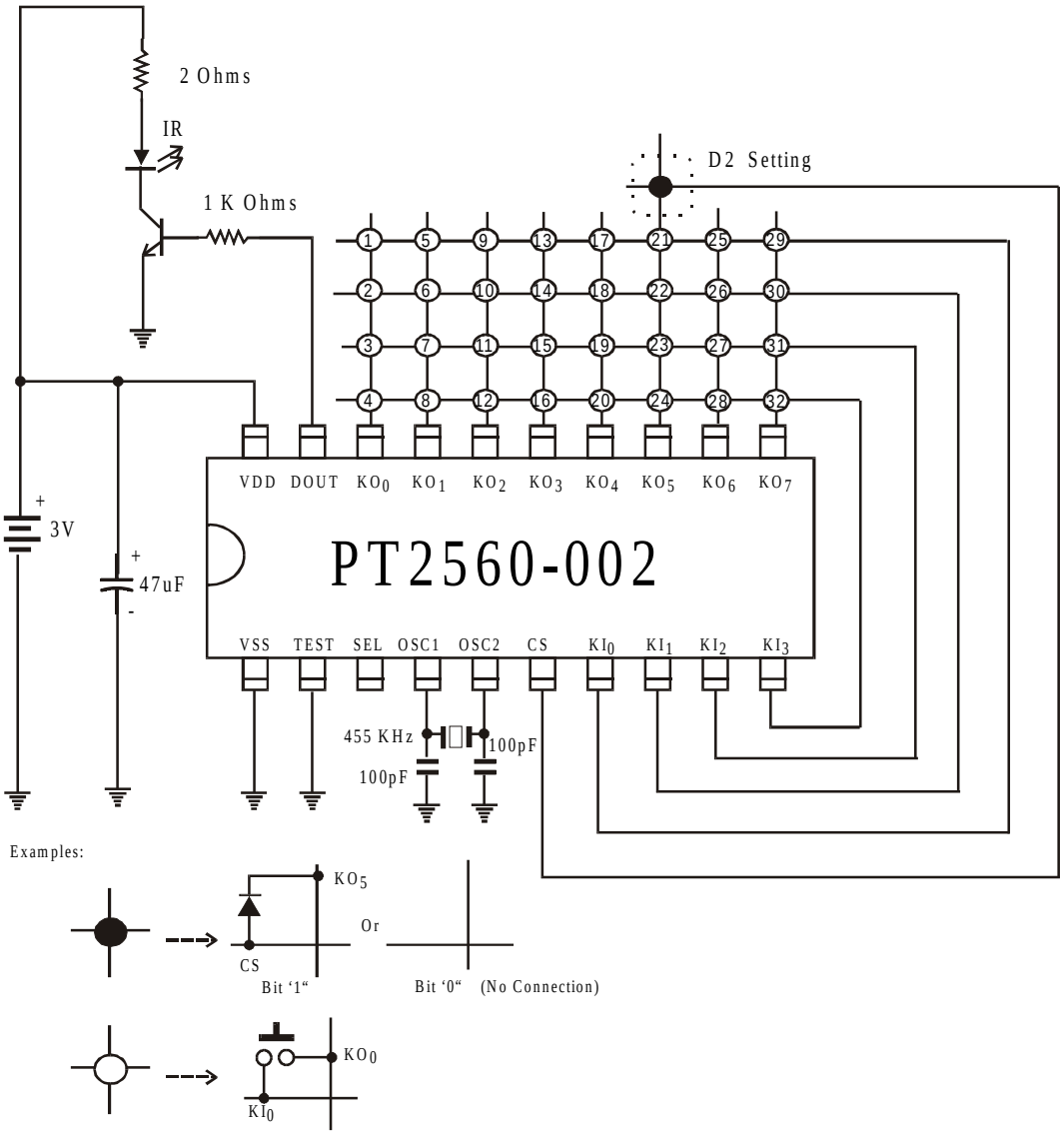

Note: D2 is the Extended Code setting. When KO_5 is connected to a DIODE, the Data Bit D5 is "1". Conversely, if the KO_5 is not connected to a DIODE, then the Data Bit, D5 is "0". PT2560 SEL Pin is "floating".

PT2560-002 Data Code Table for Application Circuit 7 (MODE B)

No.	KI Lines				KO Lines								Data Code					
	KI_0	KI_1	KI_2	KI_3	KO_0	KO_1	KO_2	KO_3	KO_4	KO_5	KO_6	KO_7	D0	D1	D2	D3	D4	D5
1	*				*								0	0	0	0	0	0/1
2		*			*								1	0	0	0	0	0/1
3			*		*								0	1	0	0	0	0/1
4				*	*								1	1	0	0	0	0/1
5	*					*							0	0	1	0	0	0/1
6		*				*							1	0	1	0	0	0/1
7			*			*							0	1	1	0	0	0/1
8				*		*							1	1	1	0	0	0/1
9	*						*						0	0	0	1	0	0/1
10		*					*						1	0	0	1	0	0/1
11			*				*						0	1	0	1	0	0/1
12				*			*						1	1	0	1	0	0/1
13	*							*					0	0	1	1	0	0/1
14		*						*					1	0	1	1	0	0/1
15			*					*					0	1	1	1	0	0/1
16				*				*					1	1	1	1	0	0/1
17	*								*				0	0	0	0	1	0/1
18		*							*				1	0	0	0	1	0/1
19			*						*				0	1	0	0	1	0/1
20				*					*				1	1	0	0	1	0/1
21	*									*			0	0	1	0	1	0/1
22		*								*			1	0	1	0	1	0/1
23			*							*			0	1	1	0	1	0/1
24				*						*			1	1	1	0	1	0/1
25	*										*		0	0	0	1	1	0/1
26		*									*		1	0	0	1	1	0/1
27			*								*		0	1	0	1	1	0/1
28				*							*		1	1	0	1	1	0/1
29	*											*	0	0	1	1	1	0/1
30		*										*	1	0	1	1	1	0/1
31			*									*	0	1	1	1	1	0/1
32				*								*	1	1	1	1	1	0/1

ООО «ЛайфЭлектроникс» “LifeElectronics” LLC

ИНН 7805602321 КПП 780501001 Р/С 40702810122510004610 ФАКБ "АБСОЛЮТ БАНК" (ЗАО) в г.Санкт-Петербурге К/С 30101810900000000703 БИК 044030703

Компания «Life Electronics» занимается поставками электронных компонентов импортного и отечественного производства от производителей и со складов крупных дистрибьюторов Европы, Америки и Азии.

С конца 2013 года компания активно расширяет линейку поставок компонентов по направлению коаксиальный кабель, кварцевые генераторы и конденсаторы (керамические, пленочные, электролитические), за счёт заключения дистрибьюторских договоров

Мы предлагаем:

- *Конкурентоспособные цены и скидки постоянным клиентам.*
- *Специальные условия для постоянных клиентов.*
- *Подбор аналогов.*
- *Поставку компонентов в любых объемах, удовлетворяющих вашим потребностям.*

- *Приемлемые сроки поставки, возможна ускоренная поставка.*
- *Доставку товара в любую точку России и стран СНГ.*
- *Комплексную поставку.*
- *Работу по проектам и поставку образцов.*
- *Формирование склада под заказчика.*

- *Сертификаты соответствия на поставляемую продукцию (по желанию клиента).*
- *Тестирование поставляемой продукции.*
- *Поставку компонентов, требующих военную и космическую приемку.*
- *Входной контроль качества.*
- *Наличие сертификата ISO.*

В составе нашей компании организован Конструкторский отдел, призванный помогать разработчикам, и инженерам.

Конструкторский отдел помогает осуществить:

- *Регистрацию проекта у производителя компонентов.*
- *Техническую поддержку проекта.*
- *Защиту от снятия компонента с производства.*
- *Оценку стоимости проекта по компонентам.*
- *Изготовление тестовой платы монтаж и пусконаладочные работы.*

Тел: +7 (812) 336 43 04 (многоканальный)
Email: org@lifeelectronics.ru

www.lifeelectronics.ru