THIS DRAWING IS UNPUBLISHED. RELEASED FOR PUBLICATION 20
© COPYRIGHT 20 BY TYCO ELECTRONICS CORPORATION. ALL RIGHTS RESERVED.

LOC	DIST
GP	00

REVISIONS

P	LTR	DESCRIPTION	DATE	DWN	APVD
	1	PRELIMINARY DESIGN	22JUN2009	CR	JP

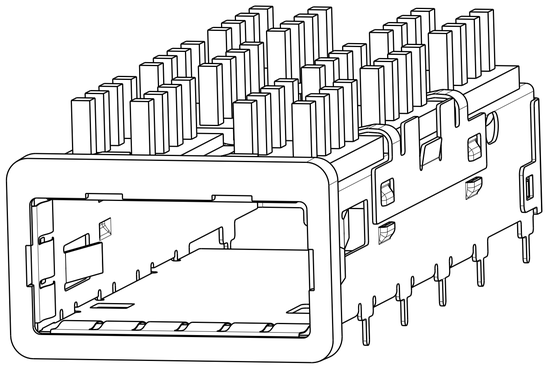

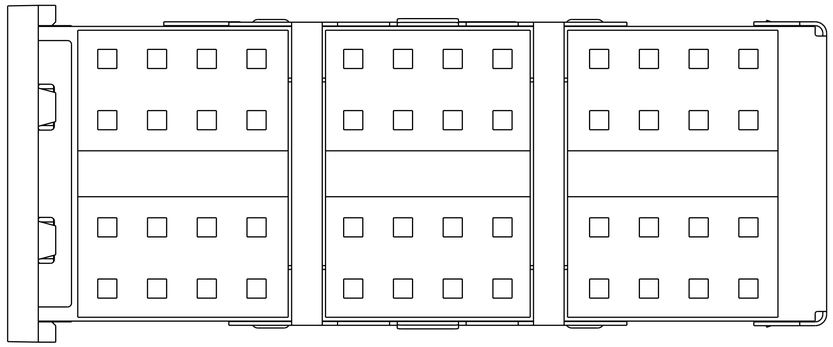

1. CAGE MATERIAL: NICKEL SILVER, 0.25 THICK
   HEAT SINK MATERIAL: ALUMINUM
   HEAT SINK CLIP MATERIAL: STAINLESS STEEL
   EMI SPRING MATERIAL: COPPER ALLOY
   FRONT FLANGE MATERIAL: ZINC ALLOY
2. MINIMUM PITCH DIMENSION.
3. MATES WITH QSFP MSA COMPATIBLE TRANSCEIVER.
4. DATUMS AND BASIC DIMENSIONS ESTABLISHED BY CUSTOMER.
5. DIMENSION C IS THE NOMINAL THICKNESS OF CUSTOMER SUPPLIED PC BOARD,
   DOUBLE SIDED PC BOARD MINIMUM THICKNESS: 2.2.
6. HEAT SINK AND CLIP SHIPPED UNATTACHED, MUST BE ASSEMBLED BY CUSTOMER AFTER THE CAGE IS SOLDERED ONTO THE PCB.
7. DATUM -A- IS TOP SURFACE OF HOST BOARD.
8. SURFACE TRACES PERMITTED WITHIN THIS AREA EXCEPT WHERE CAGE STANDOFFS, SHOWN IN DETAIL J, CONTACT PC BOARD.
9. DIMENSION APPLIES WITH MODULE INSTALLED IN THE CAGE.
10. DATE CODE (YYWWD) MARKED ON TOP OF CAGE AND CONCEALED BY HEAT SINK APPLIES TO CAGE ASSEMBLY ONLY.
11. EMI SPRING FINISH: 2µm MIN TIN.
    FRONT FLANGE FINISH: 3µm MIN TIN OVER 1.27µm MIN NICKEL OVER 5.08µm MIN COPPER.
    HEAT SINK FINISH: 0.076µm MIN NICKEL.
12. PRODUCT HAS NOT COMPLETED QUALIFICATION TESTING.

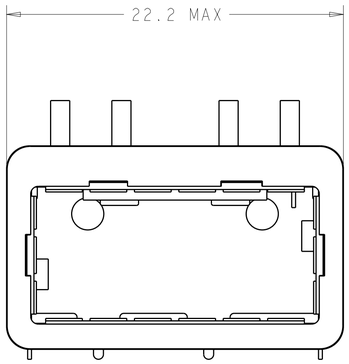

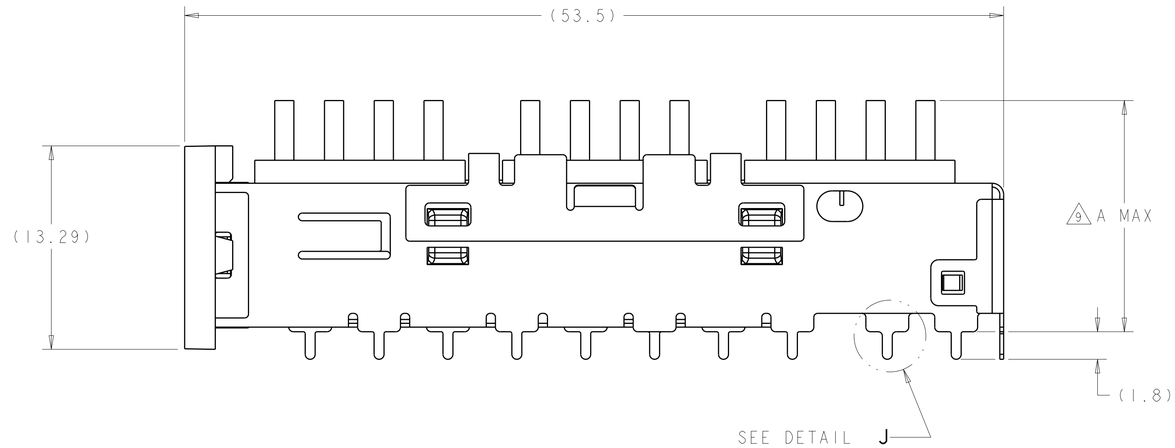

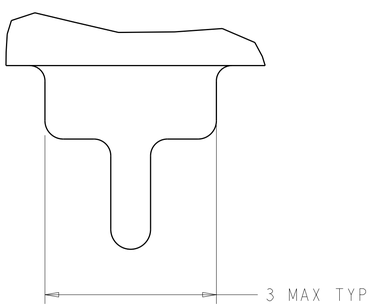

DETAIL J
SCALE 20:1 8

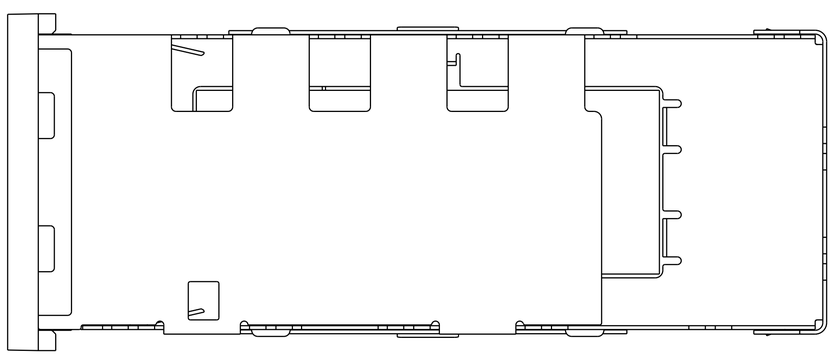

A	DESCRIPTION	PART NUMBER
23.0	NETWORKING HEAT SINK	2110753-3
16.0	SAN HEAT SINK (SHOWN)	2110753-2
13.7	PCI HEAT SINK	2110753-1

THIS DRAWING IS A CONTROLLED DOCUMENT FOR TYCO ELECTRONICS CORPORATION. IT IS SUBJECT TO CHANGE. ANY INFORMATION RECEIVED BY ANY ORGANIZATION SHOULD BE CONTACTED FOR THE LATEST REVISION.

DIMENSIONS: mm

TOLERANCES UNLESS OTHERWISE SPECIFIED:
0 PLC ±
1 PLC ±0.5
2 PLC ±0.13
3 PLC ±0.013
4 PLC ±0.0001
ANGLES ±

MATERIAL 1
FINISH 11

DWN C. ROHLER 22JUN2009
CHK J. PETERSON 22JUN2009
APVD J. PETERSON 22JUN2009
PRODUCT SPEC 108-2286
APPLICATION SPEC -
WEIGHT -

Tyco Electronics
Tyco Electronics
Harrisburg, PA 17105-3608

NAME CAGE ASSEMBLY, BEHIND BEZEL QSFP, SOLDER, WITH HEAT SINK
-

SIZE	CAGE CODE	DRAWING NO	RESTRICTED TO
A1	00779	C-2110753	-

CUSTOMER DRAWING | SCALE 5:1 | SHEET 1 OF 5 | REV 1

AMP 4805 REV 31MAR2000

Pro/ENGINEER DRAWING

THIS DRAWING IS UNPUBLISHED. RELEASED FOR PUBLICATION 20
© COPYRIGHT 20 BY TYCO ELECTRONICS CORPORATION. ALL RIGHTS RESERVED.

LOC	DIST
GP	00

REVISIONS

P	LTR	DESCRIPTION	DATE	DWN	APVD
	-	SEE SHEET 1	-	-	-

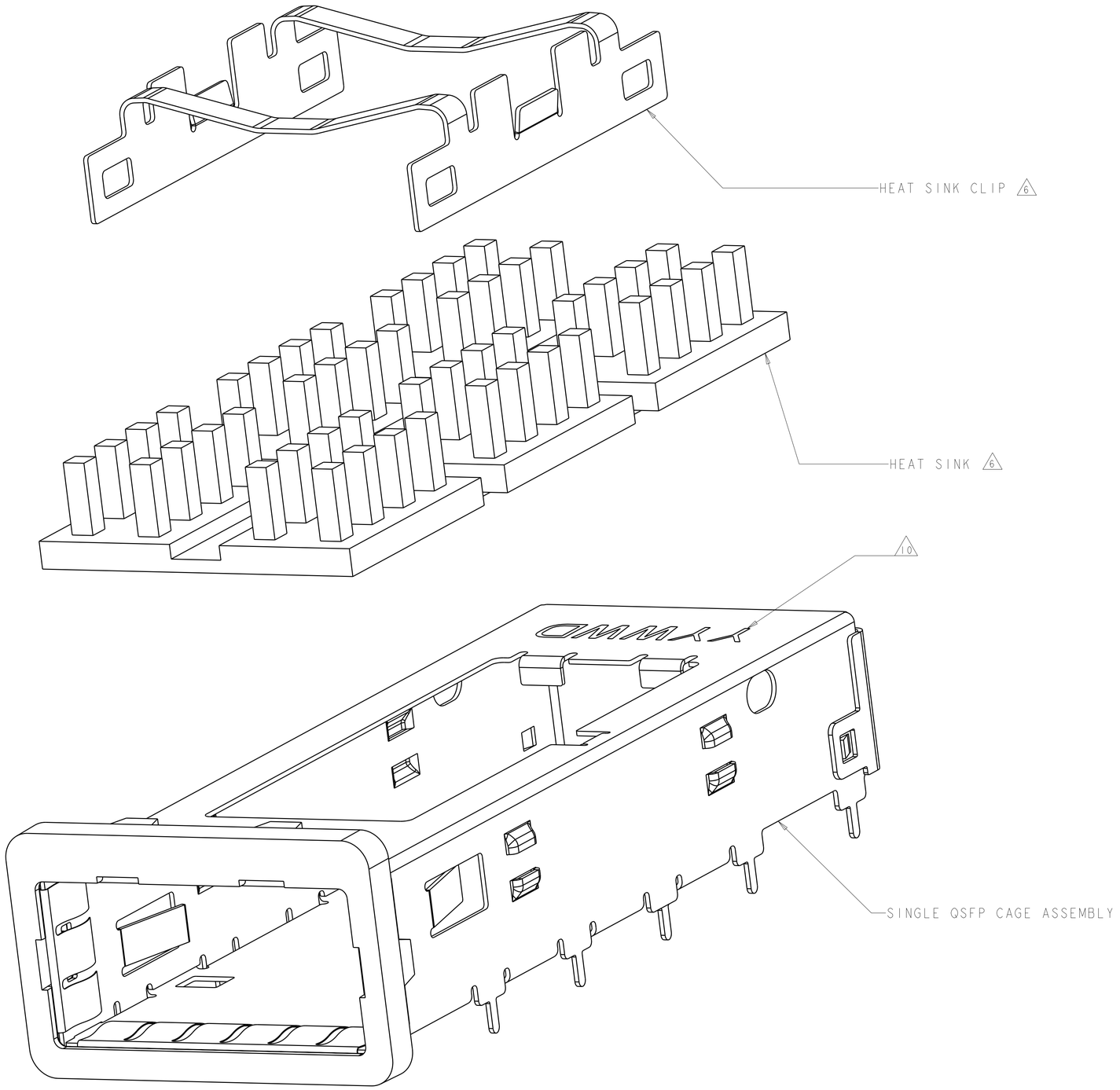

EXPLODED VIEW
SCALE 8:1

THIS DRAWING IS A CONTROLLED DOCUMENT FOR TYCO ELECTRONICS CORPORATION. IT IS SUBJECT TO CHANGE AND THE CONTROLLING ENGINEERING ORGANIZATION SHOULD BE CONTACTED FOR THE LATEST REVISION.

DIMENSIONS: mm

TOLERANCES UNLESS OTHERWISE SPECIFIED:
0 PLC ±-
1 PLC ±0.5
2 PLC ±0.13
3 PLC ±0.013
4 PLC ±0.0001
ANGLES ±-

MATERIAL - -
FINISH - -

DWN C.ROHLER 22JUN2009
CHK J.PETERSON 22JUN2009
APVD J.PETERSON 22JUN2009
PRODUCT SPEC 108-2286
APPLICATION SPEC -
WEIGHT -

Tyco Electronics
Tyco Electronics
Harrisburg, PA 17105-3608

NAME CAGE ASSEMBLY, BEHIND BEZEL QSFP, SOLDER, WITH HEAT SINK
-

SIZE	CAGE CODE	DRAWING NO	RESTRICTED TO
A1	00779	C-2110753	-

CUSTOMER DRAWING | SCALE 5:1 | SHEET 2 OF 5 | REV 1

THIS DRAWING IS UNPUBLISHED. RELEASED FOR PUBLICATION 20
© COPYRIGHT 20 BY TYCO ELECTRONICS CORPORATION. ALL RIGHTS RESERVED.

LOC	DIST
GP	00

REVISIONS

P	LTR	DESCRIPTION	DATE	DWN	APVD
	-	SEE SHEET 1	-	-	-

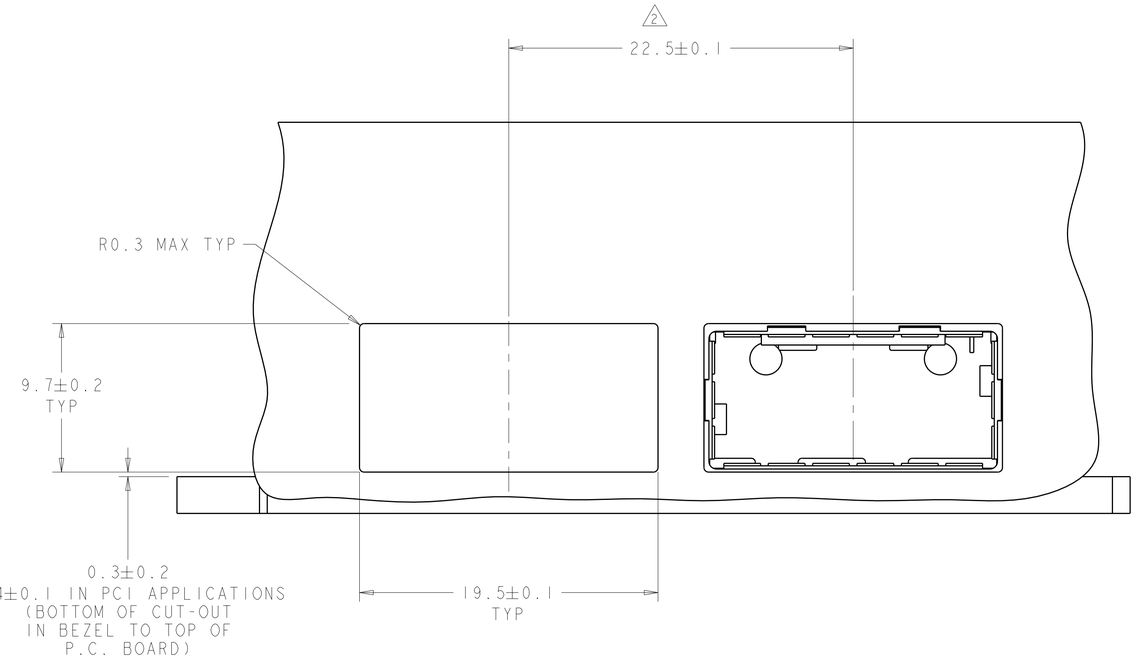

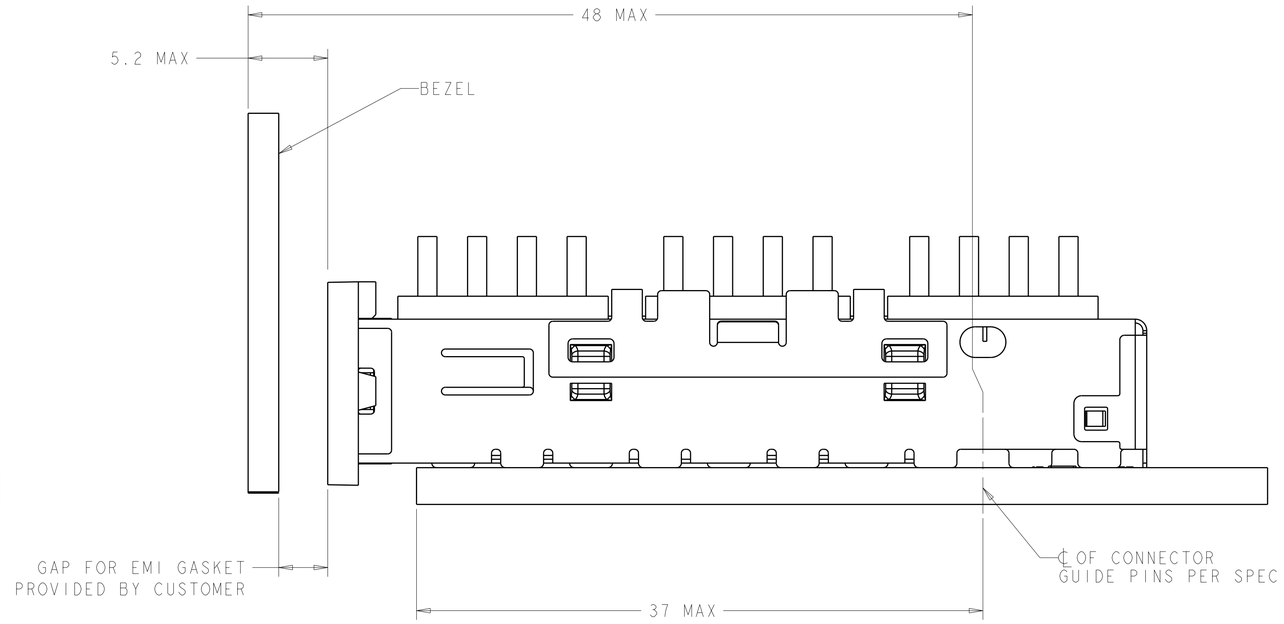

ONE SIDED CONFIGURATION

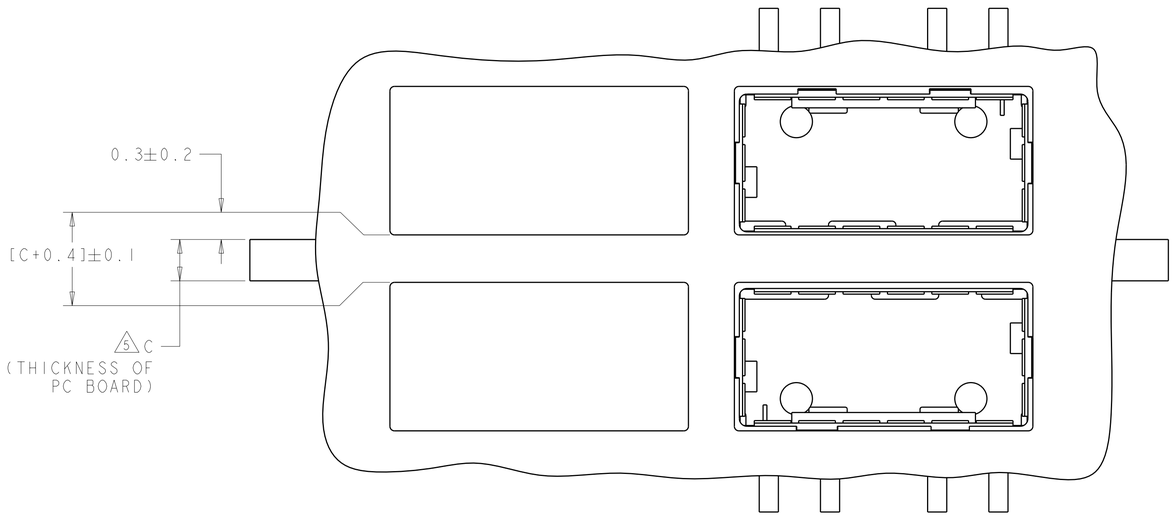

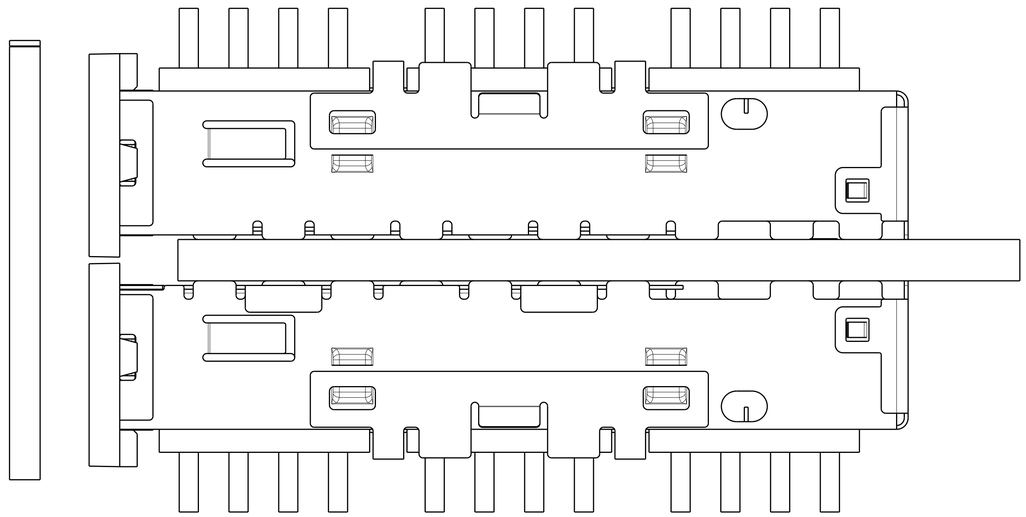

BELLY TO BELLY CONFIGURATION
SIMILAR TO ONE SIDED EXCEPT
WHERE NOTED

THIS DRAWING IS A CONTROLLED DOCUMENT FOR TYCO ELECTRONICS CORPORATION
IT IS SUBJECT TO CHANGE AND THE CONTROLLING ENGINEERING ORGANIZATION
SHOULD BE CONTACTED FOR THE LATEST REVISION.

DIMENSIONS: mm

TOLERANCES UNLESS OTHERWISE SPECIFIED:

0 PLC	±-
1 PLC	±0.5
2 PLC	±0.13
3 PLC	±0.013
4 PLC	±0.0001
ANGLES	±-

MATERIAL - -

FINISH - -

DWN	C.ROHLER	22JUN2009
CHK	J.PETERSON	22JUN2009
APVD	J.PETERSON	22JUN2009

PRODUCT SPEC 108-2286

APPLICATION SPEC -

WEIGHT -

Tyco Electronics

Tyco Electronics
Harrisburg, PA 17105-3608

NAME CAGE ASSEMBLY, BEHIND BEZEL
QSFP, SOLDER, WITH HEAT SINK
-

SIZE	CAGE CODE	DRAWING NO	RESTRICTED TO
A1	00779	C-2110753	-

CUSTOMER DRAWING

SCALE	SHEET	OF	REV
5:1	3	5	1

THIS DRAWING IS UNPUBLISHED. RELEASED FOR PUBLICATION 20
© COPYRIGHT 20 BY TYCO ELECTRONICS CORPORATION. ALL RIGHTS RESERVED.

LOC	DIST
GP	00

REVISIONS

P	LTR	DESCRIPTION	DATE	DWN	APVD
	-	SEE SHEET 1	-	-	-

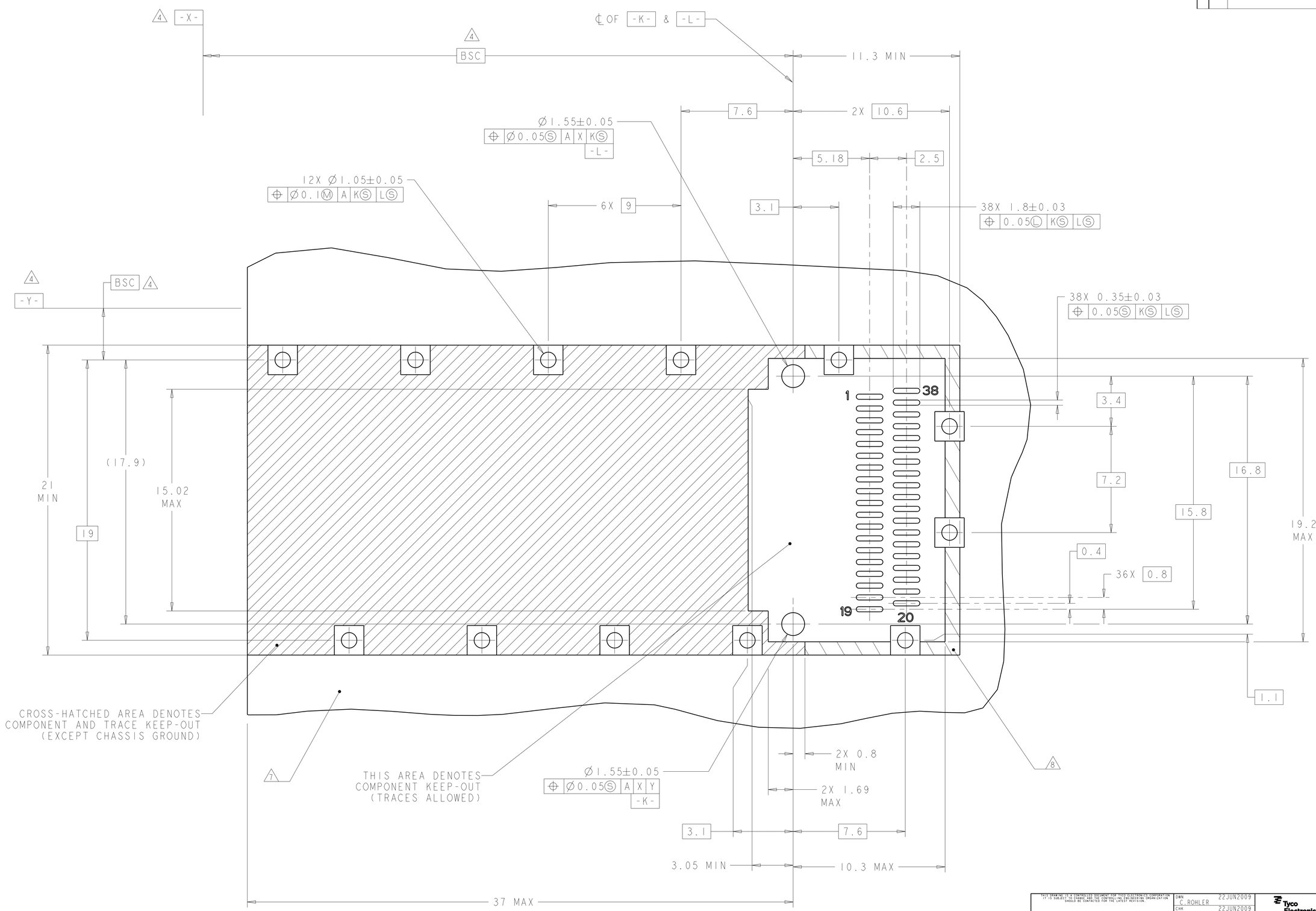

RECOMMENDED PCB LAYOUT
SINGLE SIDED CONFIGURATION
SCALE 8:1

THIS DRAWING IS A CONTROLLED DOCUMENT FOR TYCO ELECTRONICS CORPORATION. IT IS SUBJECT TO CHANGE AND THE CONTROLLING ENGINEERING ORGANIZATION SHOULD BE CONTACTED FOR THE LATEST REVISION.

DIMENSIONS: mm

TOLERANCES UNLESS OTHERWISE SPECIFIED:
0 PLC ±-
1 PLC ±0.5
2 PLC ±0.13
3 PLC ±0.013
4 PLC ±0.0001
ANGLES ±-

MATERIAL - -
FINISH - -

DWN C ROHLER 22JUN2009
CHK J PETERSON 22JUN2009
APVD J PETERSON 22JUN2009
PRODUCT SPEC 108-2286
APPLICATION SPEC -
WEIGHT -

Tyco Electronics
Tyco Electronics
Harrisburg, PA 17105-3608

NAME CAGE ASSEMBLY, BEHIND BEZEL
QSFP, SOLDER, WITH HEAT SINK
-

SIZE	CAGE CODE	DRAWING NO	RESTRICTED TO
A1	00779	C-2110753	-

CUSTOMER DRAWING | SCALE 5:1 | SHEET 4 OF 5 | REV 1

THIS DRAWING IS UNPUBLISHED. RELEASED FOR PUBLICATION 20
© COPYRIGHT 20 BY TYCO ELECTRONICS CORPORATION. ALL RIGHTS RESERVED.

LOC	DIST
GP	00

REVISIONS

P	LTR	DESCRIPTION	DATE	DWN	APVD
	-	SEE SHEET 1	-	-	-

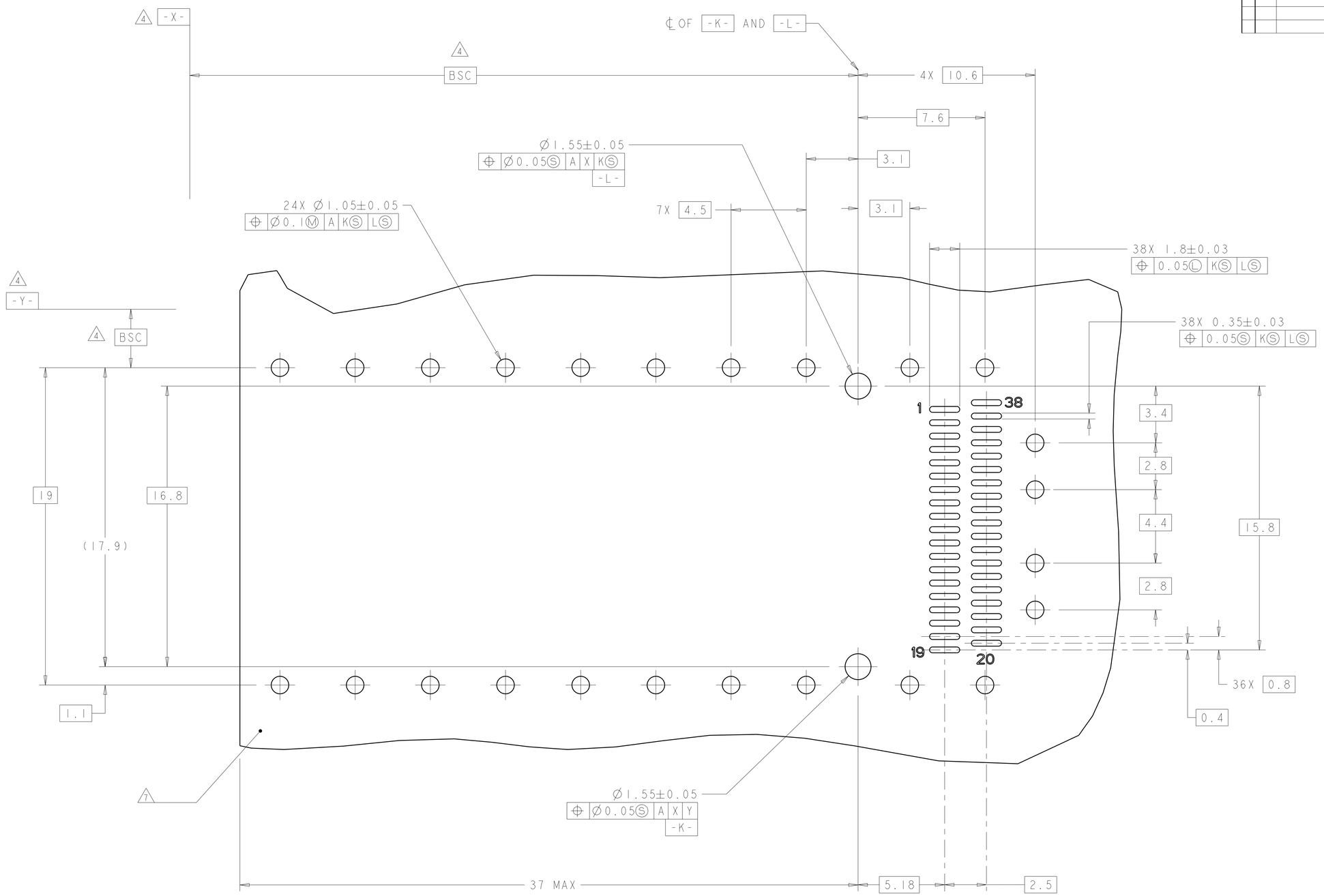

RECOMMENDED PCB LAYOUT
BELLY TO BELLY CONFIGURATION
SEE SHEET 4 FOR KEEP OUT AREAS
SCALE 8:1

THIS DRAWING IS A CONTROLLED DOCUMENT FOR TYCO ELECTRONICS CORPORATION. IT IS SUBJECT TO CHANGE AND THE CONTROLLING ENGINEERING ORGANIZATION SHOULD BE CONTACTED FOR THE LATEST REVISION.

DIMENSIONS: mm

TOLERANCES UNLESS OTHERWISE SPECIFIED:

0 PLC	±
1 PLC	±0.5
2 PLC	±0.13
3 PLC	±0.013
4 PLC	±0.0001
ANGLES	±

MATERIAL - -

FINISH - -

DWN	C ROHLER	22JUN2009
CHK	J PETERSON	22JUN2009
APVD	J PETERSON	22JUN2009
PRODUCT SPEC	108-2286	
APPLICATION SPEC	-	
WEIGHT	-	

Tyco Electronics
Tyco Electronics
Harrisburg, PA 17105-3608

NAME
CAGE ASSEMBLY, BEHIND BEZEL
QSFP, SOLDER, WITH HEAT SINK
-

SIZE	CAGE CODE	DRAWING NO	RESTRICTED TO
A1	00779	C-2110753	-

CUSTOMER DRAWING

SCALE	SHEET	OF	REV
5:1	5	5	1

ООО «ЛайфЭлектроникс» “LifeElectronics” LLC

ИНН 7805602321 КПП 780501001 Р/С 40702810122510004610 ФАКБ "АБСОЛЮТ БАНК" (ЗАО) в г.Санкт-Петербурге К/С 30101810900000000703 БИК 044030703

Компания «Life Electronics» занимается поставками электронных компонентов импортного и отечественного производства от производителей и со складов крупных дистрибьюторов Европы, Америки и Азии.

С конца 2013 года компания активно расширяет линейку поставок компонентов по направлению коаксиальный кабель, кварцевые генераторы и конденсаторы (керамические, пленочные, электролитические), за счёт заключения дистрибьюторских договоров

Мы предлагаем:

- *Конкурентоспособные цены и скидки постоянным клиентам.*
- *Специальные условия для постоянных клиентов.*
- *Подбор аналогов.*
- *Поставку компонентов в любых объемах, удовлетворяющих вашим потребностям.*

- *Приемлемые сроки поставки, возможна ускоренная поставка.*
- *Доставку товара в любую точку России и стран СНГ.*
- *Комплексную поставку.*
- *Работу по проектам и поставку образцов.*
- *Формирование склада под заказчика.*

- *Сертификаты соответствия на поставляемую продукцию (по желанию клиента).*
- *Тестирование поставляемой продукции.*
- *Поставку компонентов, требующих военную и космическую приемку.*
- *Входной контроль качества.*
- *Наличие сертификата ISO.*

В составе нашей компании организован Конструкторский отдел, призванный помогать разработчикам, и инженерам.

Конструкторский отдел помогает осуществить:

- *Регистрацию проекта у производителя компонентов.*
- *Техническую поддержку проекта.*
- *Защиту от снятия компонента с производства.*
- *Оценку стоимости проекта по компонентам.*
- *Изготовление тестовой платы монтаж и пусконаладочные работы.*

Тел: +7 (812) 336 43 04 (многоканальный)
Email: org@lifeelectronics.ru

www.lifeelectronics.ru