74LVC2G38

Dual 2-input NAND gate; open drain

Rev. 13 — 3 July 2017 Product data sheet

1 General description

The 74LVC2G38 provides a 2-input NAND function.

The outputs of the 74LVC2G38 devices are open-drain and can be connected to other open-drain outputs to implement active-LOW, wired-OR or active-HIGH wired-AND functions.

Inputs can be driven from either 3.3 V or 5 V devices. This feature allows the use of these devices as translators in a mixed 3.3 V and 5 V environment.

This device is fully specified for partial power-down applications using I_{OFF}. The I_{OFF} circuitry disables the output, preventing the damaging backflow current through the device when it is powered down.

2 Features and benefits

- Wide supply voltage range from 1.65 V to 5.5 V
- 5 V tolerant outputs for interfacing with 5 V logic
- High noise immunity
- Complies with JEDEC standard:
- – JESD8-7 (1.65 V to 1.95 V)
  – JESD8-5 (2.3 V to 2.7 V)
  – JESD8B/JESD36 (2.7 V to 3.6 V)
- ESD protection:
- – HBM EIA/JESD22-A114F exceeds 2 000 V
  – MM EIA/JESD22-A115-A exceeds 200 V
- ±24 mA output drive (V_{CC} = 3.0 V)
- CMOS low power consumption
- Open-drain outputs
- Latch-up performance exceeds 250 mA
- Direct interface with TTL levels
- Inputs accept voltages up to 5 V
- Multiple package options
- Specified from -40 °C to +85 °C and -40 °C to +125 °C

nexperia

3 Ordering information

Table 1. Ordering information

Type number	Package			
	Temperature range	Name	Description	Version
74LVC2G38DP	-40 °C to +125 °C	TSSOP8	plastic thin shrink small outline package; 8 leads; body width 3 mm; lead length 0.5 mm	SOT505-2
74LVC2G38DC	-40 °C to +125 °C	VSSOP8	plastic very thin shrink small outline package; 8 leads; body width 2.3 mm	SOT765-1
74LVC2G38GT	-40 °C to +125 °C	XSON8	plastic extremely thin small outline package; no leads; 8 terminals; body 1 x 1.95 x 0.5 mm	SOT833-1
74LVC2G38GF	-40 °C to +125 °C	XSON8	extremely thin small outline package; no leads; 8 terminals; body 1.35 x 1 x 0.5 mm	SOT1089
74LVC2G38GM	-40 °C to +125 °C	XQFN8	plastic, extremely thin quad flat package; no leads; 8 terminals; body 1.6 x 1.6 x 0.5 mm	SOT902-2
74LVC2G38GN	-40 °C to +125 °C	XSON8	extremely thin small outline package; no leads; 8 terminals; body 1.2 x 1.0 x 0.35 mm	SOT1116
74LVC2G38GS	-40 °C to +125 °C	XSON8	extremely thin small outline package; no leads; 8 terminals; body 1.35 x 1.0 x 0.35 mm	SOT1203
74LVC2G38GX	-40 °C to +125 °C	X2SON8	plastic thermal enhanced extremely thin small outline package; no leads; 8 terminals; body 1.35 x 0.8 x 0.35 mm	SOT1233

4 Marking

Table 2. Marking codes

Type number	Marking code[1]
74LVC2G38DP	Y38
74LVC2G38DC	Y38
74LVC2G38GT	Y38
74LVC2G38GF	YB
74LVC2G38GM	Y38
74LVC2G38GN	YB
74LVC2G38GS	YB
74LVC2G38GX	YB

[1] The pin 1 indicator is located on the lower left corner of the device, below the marking code.

All information provided in this document is subject to legal disclaimers.

© Nexperia B.V. 2017. All rights reserved.

5 Functional diagram

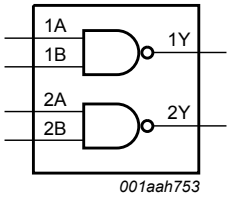

Figure 1. Logic symbol

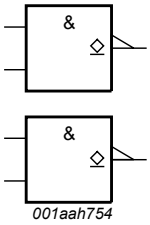

Figure 2. IEC logic symbol

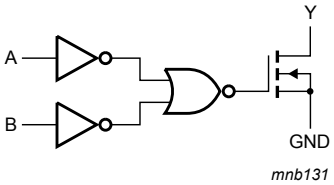

Figure 3. Functional diagram (one gate)

6 Pinning information

6.1 Pinning

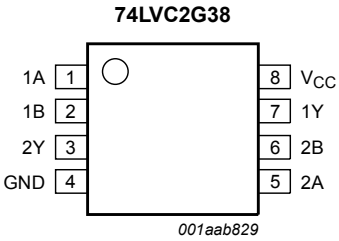

Figure 4. Pin configuration SOT505-2 and SOT765-1

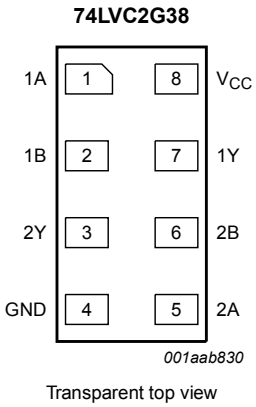

Figure 5. Pin configuration SOT833-1, SOT1089, SOT1116 and SOT1203

All information provided in this document is subject to legal disclaimers.

© Nexperia B.V. 2017. All rights reserved.

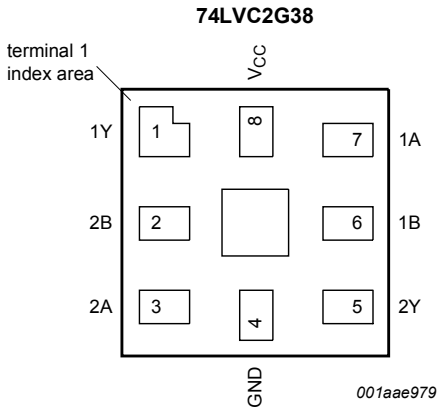

Transparent top view

Figure 6. Pin configuration SOT902-2

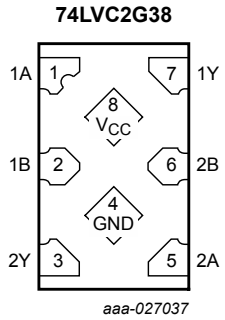

Transparent top view

Figure 7. Pin configuration SOT1233

6.2 Pin description

Table 3. Pin description

Symbol	Pin		Description
	SOT505-2, SOT765-1, SOT833-1, SOT1089, SOT1116, SOT1203 and SOT1233	SOT902-2	
1A, 2A	1, 5	7, 3	data input
1B, 2B	2, 6	6, 2	data input
GND	4	4	ground (0 V)
1Y, 2Y	7, 3	1, 5	data output
V_{CC}	8	8	supply voltage

7 Functional description

Table 4. Function table

H = HIGH voltage level; L = LOW voltage level; Z = high-impedance OFF-state.

Input		Output
nA	nB	nY
L	L	Z
L	H	Z
H	L	Z
H	H	L

All information provided in this document is subject to legal disclaimers.

© Nexperia B.V. 2017. All rights reserved.

8 Limiting values

Table 5. Limiting values

In accordance with the Absolute Maximum Rating System (IEC 60134). Voltages are referenced to GND (ground = 0 V).

Symbol	Parameter	Conditions		Min	Max	Unit
V_{CC}	supply voltage			-0.5	+6.5	V
V_I	input voltage		[1]	-0.5	+6.5	V
V_O	output voltage	Active mode	[1] [2]	-0.5	+6.5	V
		Power-down mode	[1] [2]	-0.5	+6.5	V
I_{IK}	input clamping current	V_I < 0 V		-50	-	mA
I_{OK}	output clamping current	V_O > V_{CC} or V_O < 0 V		-	±50	mA
I_O	output current	V_O = 0 V to V_{CC}		-	±50	mA
I_{CC}	supply current			-	100	mA
I_{GND}	ground current			-100	-	mA
T_{stg}	storage temperature			-65	+150	°C
P_{tot}	total power dissipation	T_{amb} = -40 °C to +125 °C	[3]	-	300	mW

[1] The input and output voltage ratings may be exceeded if the input and output current ratings are observed.
[2] When V_{CC} = 0 V (Power-down mode), the output voltage can be 5.5 V in normal operation.
[3] For TSSOP8 package: above 55 °C the value of P_{tot} derates linearly with 2.5 mW/K.
For VSSOP8 package: above 110 °C the value of P_{tot} derates linearly with 8 mW/K.
For XSON8 and XQFN8 packages: above 118 °C the value of P_{tot} derates linearly with 7.8 mW/K.
For X2SON8 package: above 118 °C the value of P_{tot} derates linearly with 7.7 mW/K.

9 Recommended operating conditions

Table 6. Operating conditions

Symbol	Parameter	Conditions	Min	Max	Unit
V_{CC}	supply voltage		1.65	5.5	V
V_I	input voltage		0	5.5	V
V_O	output voltage	Active mode	0	V_{CC}	V
		disable mode	0	5.5	V
		Power-down mode	0	5.5	V
T_{amb}	ambient temperature		-40	+125	°C
Δt/ΔV	input transition rise and fall rate	V_{CC} = 1.65 V to 2.7 V	-	20	ns/V
		V_{CC} = 2.7 V to 5.5 V	-	10	ns/V

All information provided in this document is subject to legal disclaimers.

© Nexperia B.V. 2017. All rights reserved.

10 Static characteristics

Table 7. Static characteristics

At recommended operating conditions; voltages are referenced to GND (ground = 0 V).

Symbol	Parameter	Conditions	Min	Typ[1]	Max	Unit
T_{amb} = -40 °C to +85 °C						
V_{IH}	HIGH-level input voltage	V_{CC} = 1.65 V to 1.95 V	0.65 × V_{CC}	-	-	V
		V_{CC} = 2.3 V to 2.7 V	1.7	-	-	V
		V_{CC} = 2.7 V to 3.6 V	2.0	-	-	V
		V_{CC} = 4.5 V to 5.5 V	0.7 × V_{CC}	-	-	V
V_{IL}	LOW-level input voltage	V_{CC} = 1.65 V to 1.95 V	-	-	0.35 × V_{CC}	V
		V_{CC} = 2.3 V to 2.7 V	-	-	0.7	V
		V_{CC} = 2.7 V to 3.6 V	-	-	0.8	V
		V_{CC} = 4.5 V to 5.5 V	-	-	0.3 × V_{CC}	V
V_{OL}	LOW-level output voltage	V_I = V_{IH} or V_{IL}				
		I_O = 100 μA; V_{CC} = 1.65 V to 5.5 V	-	-	0.1	V
		I_O = 4 mA; V_{CC} = 1.65 V	-	0.08	0.45	V
		I_O = 8 mA; V_{CC} = 2.3 V	-	0.14	0.3	V
		I_O = 12 mA; V_{CC} = 2.7 V	-	0.19	0.4	V
		I_O = 24 mA; V_{CC} = 3.0 V	-	0.37	0.55	V
		I_O = 32 mA; V_{CC} = 4.5 V	-	0.43	0.55	V
I_I	input leakage current	V_I = 5.5 V or GND; V_{CC} = 0 V to 5.5 V	-	±0.1	±1	μA
I_{OZ}	OFF-state output current	V_I = V_{IH} or V_{IL}; V_O = V_{CC} or GND; V_{CC} = 5.5 V	-	±0.1	±2	μA
I_{OFF}	power-off leakage current	V_I or V_O = 5.5 V; V_{CC} = 0 V	-	±0.1	±2	μA
I_{CC}	supply current	V_I = 5.5 V or GND; V_{CC} = 1.65 V to 5.5 V; I_O = 0 A	-	0.1	4	μA
ΔI_{CC}	additional supply current	per pin; V_I = V_{CC} - 0.6 V; V_{CC} = 2.3 V to 5.5 V; I_O = 0 A	-	5	500	μA
C_I	input capacitance		-	2.5	-	pF

All information provided in this document is subject to legal disclaimers.

© Nexperia B.V. 2017. All rights reserved.

Symbol	Parameter	Conditions	Min	Typ[1]	Max	Unit
T_{amb} = -40 °C to +125 °C						
V_{IH}	HIGH-level input voltage	V_{CC} = 1.65 V to 1.95 V	0.65 × V_{CC}	-	-	V
		V_{CC} = 2.3 V to 2.7 V	1.7	-	-	V
		V_{CC} = 2.7 V to 3.6 V	2.0	-	-	V
		V_{CC} = 4.5 V to 5.5 V	0.7 × V_{CC}	-	-	V
V_{IL}	LOW-level input voltage	V_{CC} = 1.65 V to 1.95 V	-	-	0.35 × V_{CC}	V
		V_{CC} = 2.3 V to 2.7 V	-	-	0.7	V
		V_{CC} = 2.7 V to 3.6 V	-	-	0.8	V
		V_{CC} = 4.5 V to 5.5 V	-	-	0.3 × V_{CC}	V
V_{OL}	LOW-level output voltage	V_I = V_{IH} or V_{IL}				
		I_O = 100 μA; V_{CC} = 1.65 V to 5.5 V	-	-	0.1	V
		I_O = 4 mA; V_{CC} = 1.65 V	-	-	0.70	V
		I_O = 8 mA; V_{CC} = 2.3 V	-	-	0.45	V
		I_O = 12 mA; V_{CC} = 2.7 V	-	-	0.60	V
		I_O = 24 mA; V_{CC} = 3.0 V	-	-	0.80	V
		I_O = 32 mA; V_{CC} = 4.5 V	-	-	0.80	V
I_I	input leakage current	V_I = 5.5 V or GND; V_{CC} = 0 V to 5.5 V	-	-	±1	μA
I_{OZ}	OFF-state output current	V_I = V_{IH} or V_{IL}; V_O = V_{CC} or GND; V_{CC} = 5.5 V	-	±0.1	±2	μA
I_{OFF}	power-off leakage current	V_I or V_O = 5.5 V; V_{CC} = 0 V	-	-	±2	μA
I_{CC}	supply current	V_I = 5.5 V or GND; V_{CC} = 1.65 V to 5.5 V; I_O = 0 A	-	-	4	μA
ΔI_{CC}	additional supply current	per pin; V_I = V_{CC} - 0.6 V; V_{CC} = 2.3 V to 5.5 V; I_O = 0 A	-	-	500	μA

[1] All typical values are measured at T_{amb} = 25 °C.

All information provided in this document is subject to legal disclaimers.

© Nexperia B.V. 2017. All rights reserved.

11 Dynamic characteristics

Table 8. Dynamic characteristics

Voltages are referenced to GND (ground 0 V); for test circuit see Figure 9.

Symbol	Parameter	Conditions	-40 °C to +85 °C			-40 °C to +125 °C		Unit
			Min	Typ [1]	Max	Min	Max	
t_{PZL}	OFF-state to LOW propagation delay	nA, nB to nY; see Figure 8						
		V_{CC} = 1.65 V to 1.95 V	1.2	3.0	8.6	1.2	10.8	ns
		V_{CC} = 2.3 V to 2.7 V	0.7	1.8	4.8	0.7	6.0	ns
		V_{CC} = 2.7 V	0.7	2.5	4.4	0.7	5.5	ns
		V_{CC} = 3.0 V to 3.6 V	0.7	2.1	4.1	0.7	5.2	ns
		V_{CC} = 4.5 V to 5.5 V	0.5	1.5	3.3	0.5	4.2	ns
t_{PLZ}	LOW to OFF-state propagation delay	nA, nB to nY; see Figure 8						
		V_{CC} = 1.65 V to 1.95 V	1.2	3.0	8.6	1.2	10.8	ns
		V_{CC} = 2.3 V to 2.7 V	0.7	1.8	4.8	0.7	6.0	ns
		V_{CC} = 2.7 V	0.7	2.5	4.4	0.7	5.5	ns
		V_{CC} = 3.0 V to 3.6 V	0.7	2.1	4.1	0.7	5.2	ns
		V_{CC} = 4.5 V to 5.5 V	0.5	1.5	3.3	0.5	4.2	ns
C_{PD}	power dissipation capacitance	per gate; V_I = GND to V_{CC} [2]	-	5	-	-	-	pF

[1] Typical values are measured at nominal V_{CC} and at T_{amb} = 25 °C.

[2] C_{PD} is used to determine the dynamic power dissipation (P_D in μW).

$P_D = C_{PD} \times V_{CC}^2 \times f_i \times N + \sum(C_L \times V_{CC}^2 \times f_o)$ where:

f_i = input frequency in MHz;

f_o = output frequency in MHz;

C_L = output load capacitance in pF;

V_{CC} = supply voltage in V;

N = number of inputs switching;

$\sum(C_L \times V_{CC}^2 \times f_o)$ = sum of outputs.

11.1 Waveforms and test circuit

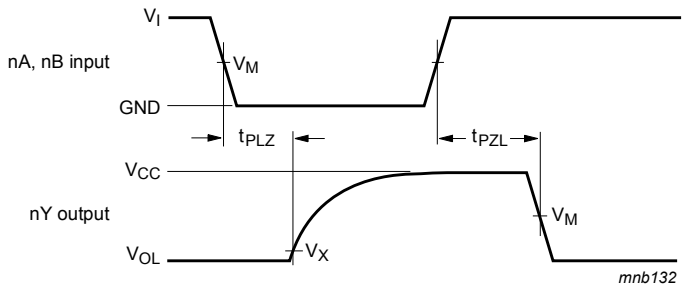

Measurement points are given in Table 9

Figure 8. Inputs nA and nB to output nY propagation delay times

All information provided in this document is subject to legal disclaimers.

© Nexperia B.V. 2017. All rights reserved.

Table 9. Measurement points

Supply voltage	Input	Output	
V_{CC}	V_M	V_X	V_M
1.65 V to 1.95 V	0.5 x V_{CC}	V_{OL} + 0.15 V	0.5 x V_{CC}
2.3 V to 2.7 V	0.5 x V_{CC}	V_{OL} + 0.15 V	0.5 x V_{CC}
2.7 V	1.5 V	V_{OL} + 0.3 V	1.5 V
3.0 V to 3.6 V	1.5 V	V_{OL} + 0.3 V	1.5 V
4.5 V to 5.5 V	0.5 x V_{CC}	V_{OL} + 0.3 V	0.5 x V_{CC}

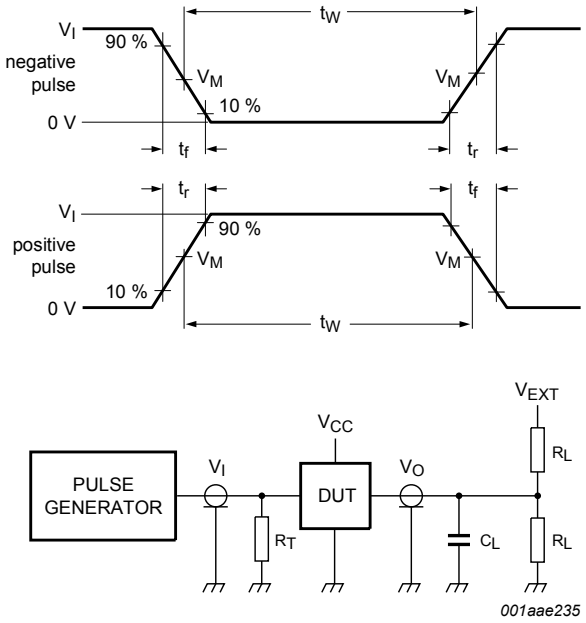

Test data is given in Table 10

Definitions for test circuit:

R_L = Load resistance.

C_L = Load capacitance including jig and probe capacitance.

R_T = Termination resistance should be equal to output impedance Z_o of the pulse generator.

V_{EXT} = External voltage for measuring switching times.

Figure 9. Test circuit for measuring switching times

Table 10. Test data

Supply voltage	Input		Load		V_{EXT}
V_{CC}	V_I	t_r, t_f	C_L	R_L	t_{PLZ}, t_{PZL}
1.65 V to 1.95 V	V_{CC}	≤ 2.0 ns	30 pF	1 kΩ	2 x V_{CC}
2.3 V to 2.7 V	V_{CC}	≤ 2.0 ns	30 pF	500 Ω	2 x V_{CC}
2.7 V	2.7 V	≤ 2.5 ns	50 pF	500 Ω	6 V
3.0 V to 3.6 V	2.7 V	≤ 2.5 ns	50 pF	500 Ω	6 V
4.5 V to 5.5 V	V_{CC}	≤ 2.5 ns	50 pF	500 Ω	2 x V_{CC}

All information provided in this document is subject to legal disclaimers.

© Nexperia B.V. 2017. All rights reserved.

12 Package outline

TSSOP8: plastic thin shrink small outline package; 8 leads; body width 3 mm; lead length 0.5 mm SOT505-2

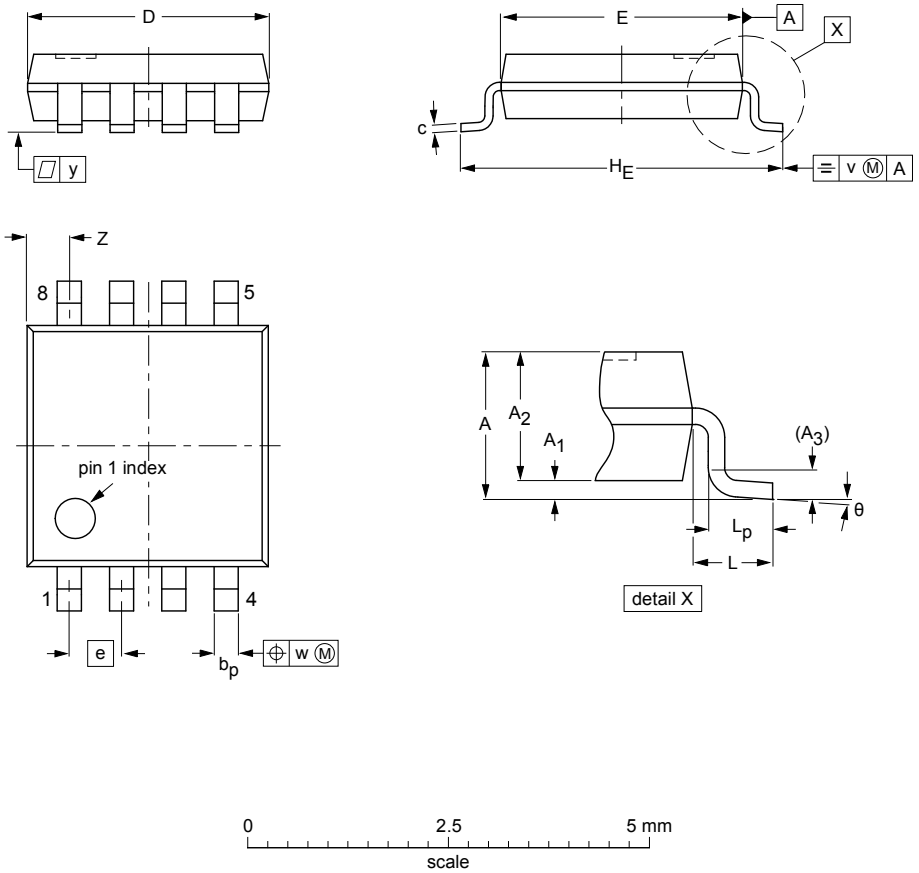

DIMENSIONS (mm are the original dimensions)

UNIT	A max.	A_1	A_2	A_3	b_p	c	D(1)	E(1)	e	H_E	L	L_p	v	w	y	Z(1)	θ
mm	1.1	0.15 0.00	0.95 0.75	0.25	0.38 0.22	0.18 0.08	3.1 2.9	3.1 2.9	0.65	4.1 3.9	0.5	0.47 0.33	0.2	0.13	0.1	0.70 0.35	8° 0°

Note

1. Plastic or metal protrusions of 0.15 mm maximum per side are not included.

OUTLINE VERSION	REFERENCES				EUROPEAN PROJECTION	ISSUE DATE
	IEC	JEDEC	JEITA			
SOT505-2		- - -				02-01-16

Figure 10. Package outline SOT505-2 (TSSOP8)

All information provided in this document is subject to legal disclaimers.

© Nexperia B.V. 2017. All rights reserved.

VSSOP8: plastic very thin shrink small outline package; 8 leads; body width 2.3 mm **SOT765-1**

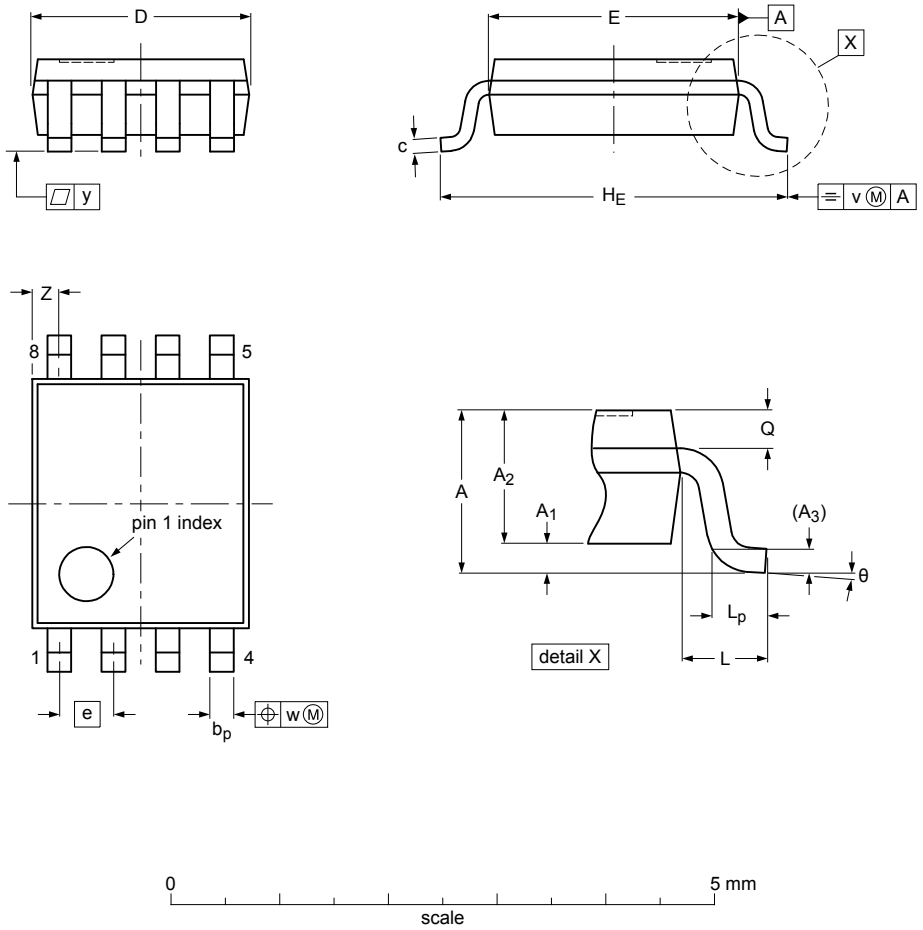

Dimensions (mm are the original dimensions)

Unit		A max.	A_1	A_2	A_3	b_p	c	$D^{(1)}$	$E^{(2)}$	e	H_E	L	L_p	Q	v	w	y	$Z^{(1)}$	θ
mm	max	1	0.15	0.85	0.12	0.27	0.23	2.1	2.4	0.5	3.2	0.4	0.40	0.21	0.2	0.08	0.1	0.4	8°
	nom			0.60		0.17	0.08	1.9	2.2		3.0		0.15	0.19				0.1	0°
	min		0.00																

Note
1. Plastic or metal protrusions of 0.15 mm maximum per side are not included.
2. Plastic or metal protrusions of 0.25 mm maximum per side are not included.

sot765-1_po

Outline version	References				European projection	Issue date
	IEC	JEDEC	JEITA			
SOT765-1		MO-187				~~07-06-02~~ 16-05-31

Figure 11. Package outline SOT765-1 (VSSOP8)

All information provided in this document is subject to legal disclaimers.

© Nexperia B.V. 2017. All rights reserved.

XSON8: plastic extremely thin small outline package; no leads; 8 terminals; body 1 x 1.95 x 0.5 mm **SOT833-1**

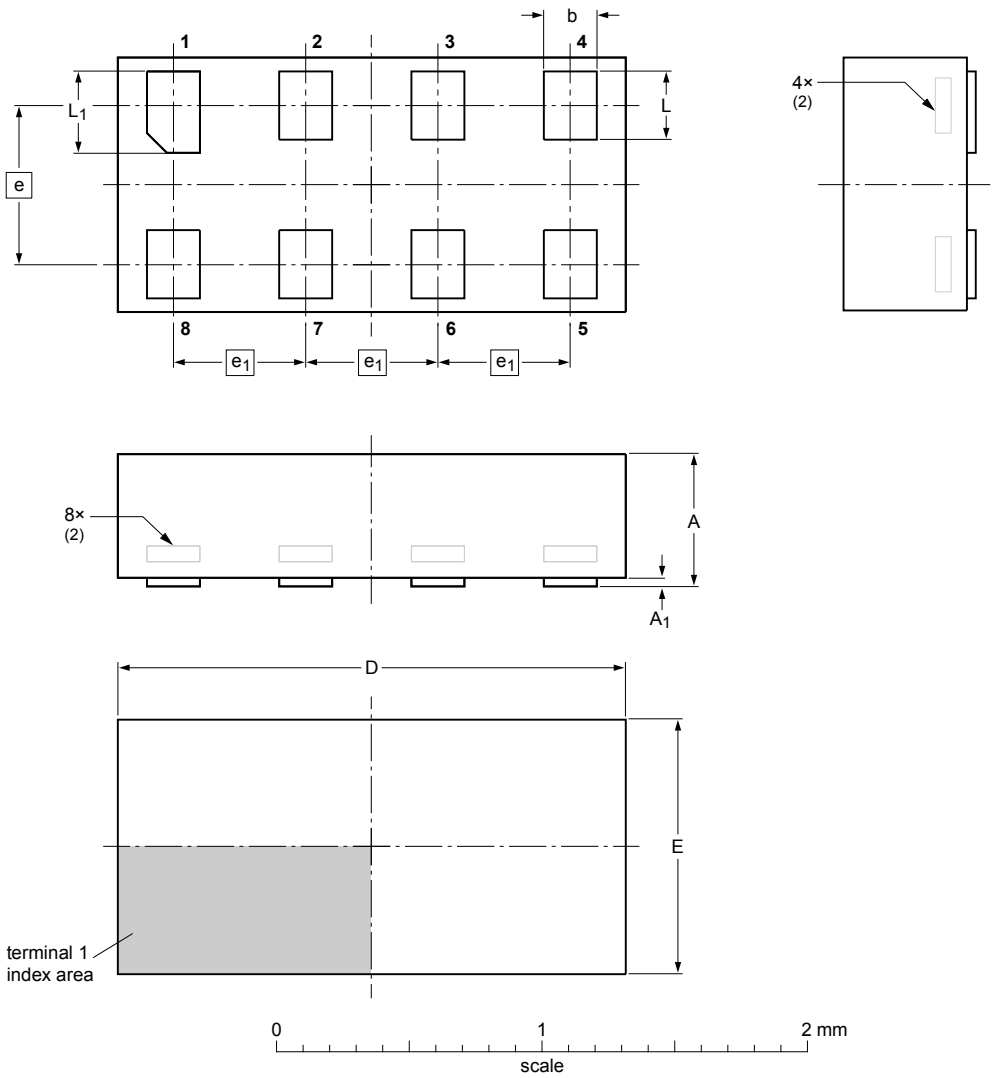

DIMENSIONS (mm are the original dimensions)

UNIT	A(1) max	A_1 max	b	D	E	e	e_1	L	L_1
mm	0.5	0.04	0.25 0.17	2.0 1.9	1.05 0.95	0.6	0.5	0.35 0.27	0.40 0.32

Notes

1. Including plating thickness.
2. Can be visible in some manufacturing processes.

OUTLINE VERSION	REFERENCES				EUROPEAN PROJECTION	ISSUE DATE
	IEC	JEDEC	JEITA			
SOT833-1	- - -	MO-252	- - -			~~07-11-14~~ 07-12-07

Figure 12. Package outline SOT833-1 (XSON8)

All information provided in this document is subject to legal disclaimers.

© Nexperia B.V. 2017. All rights reserved.

XSON8: extremely thin small outline package; no leads; 8 terminals; body 1.35 x 1 x 0.5 mm **SOT1089**

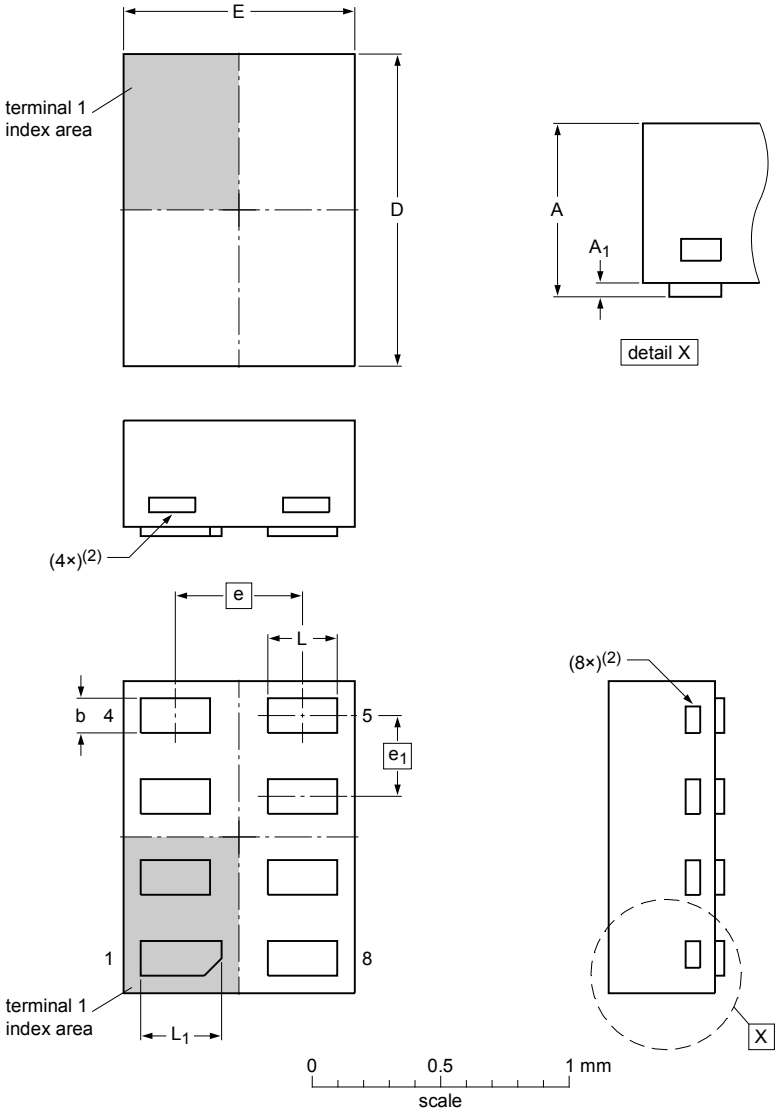

Dimensions

Unit		A(1)	A1	b	D	E	e	e1	L	L1
mm	max	0.5	0.04	0.20	1.40	1.05			0.35	0.40
	nom			0.15	1.35	1.00	0.55	0.35	0.30	0.35
	min			0.12	1.30	0.95			0.27	0.32

Note
1. Including plating thickness.
2. Visible depending upon used manufacturing technology.

sot1089_po

Outline version	References				European projection	Issue date
	IEC	JEDEC	JEITA			
SOT1089		MO-252				~~10-04-09~~ 10-04-12

Figure 13. Package outline SOT1089 (XSON8)

All information provided in this document is subject to legal disclaimers.

© Nexperia B.V. 2017. All rights reserved.

XQFN8: plastic, extremely thin quad flat package; no leads; 8 terminals; body 1.6 x 1.6 x 0.5 mm **SOT902-2**

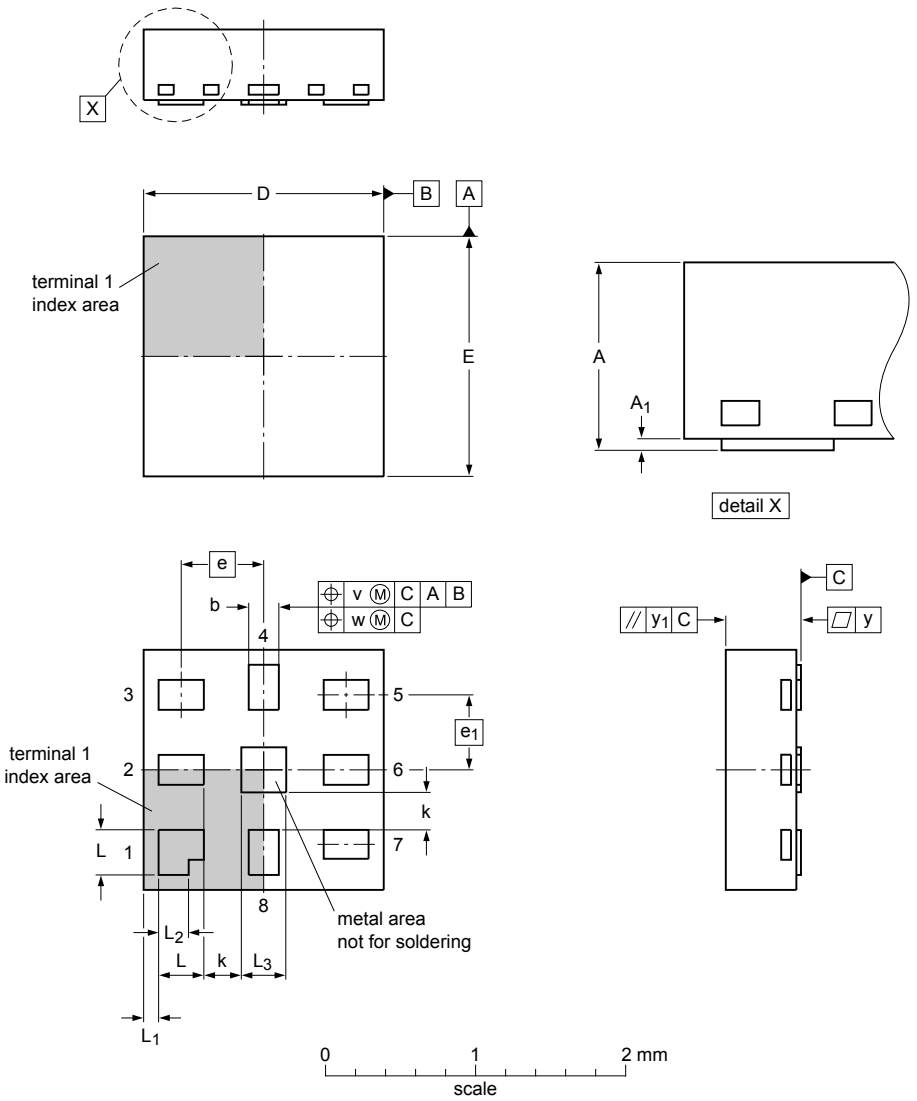

Dimensions

Unit[1]		A	A_1	b	D	E	e	e_1	k	L	L_1	L_2	L_3	v	w	y	y_1
mm	max	0.5	0.05	0.25	1.65	1.65				0.35	0.15	0.25	0.35				
	nom			0.20	1.60	1.60	0.55	0.5		0.30	0.10	0.20	0.30	0.1	0.05	0.05	0.05
	min		0.00	0.15	1.55	1.55			0.2	0.25	0.05	0.15	0.25				

Note
1. Plastic or metal protrusions of 0.075 mm maximum per side are not included.

sot902-2_po

Outline version	References				European projection	Issue date
	IEC	JEDEC	JEITA			
SOT902-2	- - -	MO-255	- - -			~~16-07-14~~ 16-11-08

Figure 14. Package outline SOT902-2 (XQFN8)

All information provided in this document is subject to legal disclaimers.

© Nexperia B.V. 2017. All rights reserved.

XSON8: extremely thin small outline package; no leads; 8 terminals; body 1.2 x 1.0 x 0.35 mm **SOT1116**

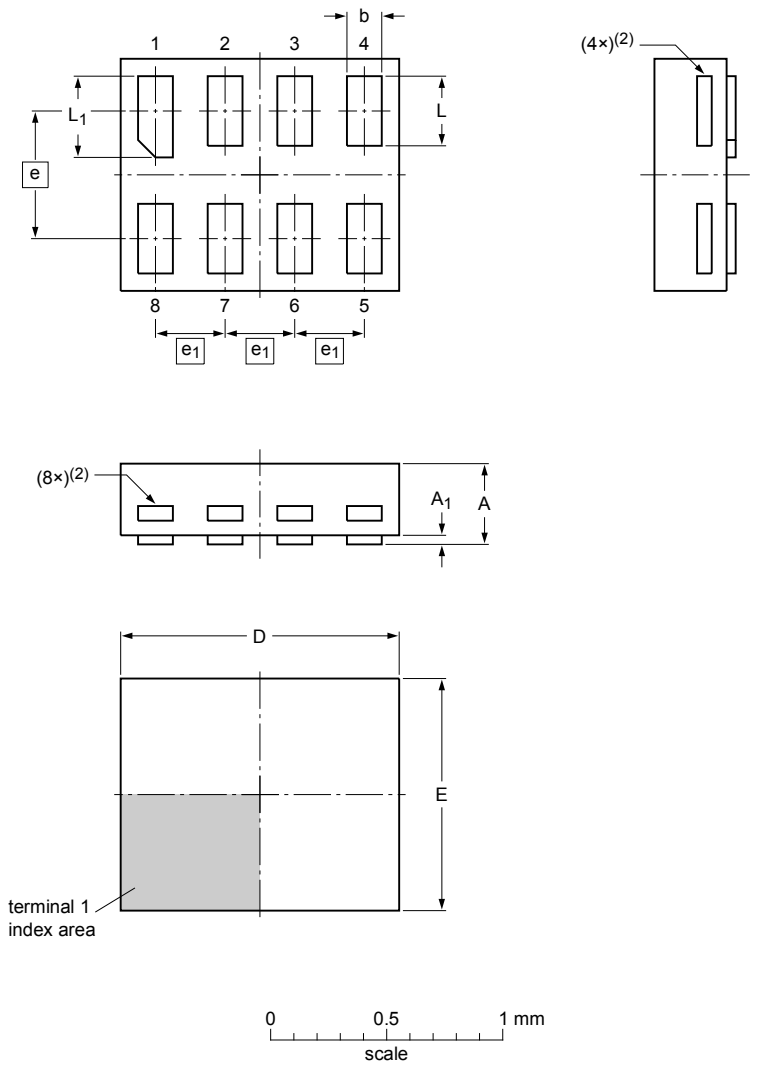

Dimensions

Unit		A(1)	A_1	b	D	E	e	e_1	L	L_1
mm	max	0.35	0.04	0.20	1.25	1.05			0.35	0.40
	nom			0.15	1.20	1.00	0.55	0.3	0.30	0.35
	min			0.12	1.15	0.95			0.27	0.32

Note
1. Including plating thickness.
2. Visible depending upon used manufacturing technology.

sot1116_po

Outline version	References				European projection	Issue date
	IEC	JEDEC	JEITA			
SOT1116						~~10-04-02~~ 10-04-07

Figure 15. Package outline SOT1116 (XSON8)

All information provided in this document is subject to legal disclaimers.

© Nexperia B.V. 2017. All rights reserved.

XSON8: extremely thin small outline package; no leads; 8 terminals; body 1.35 x 1.0 x 0.35 mm **SOT1203**

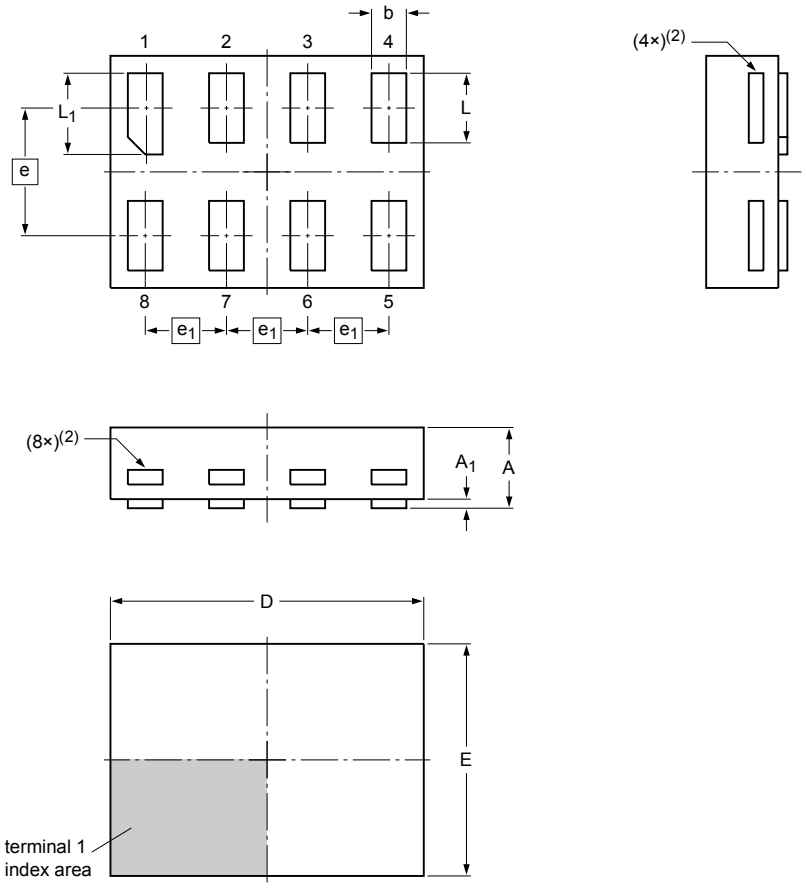

Dimensions

Unit		A(1)	A_1	b	D	E	e	e_1	L	L_1
mm	max	0.35	0.04	0.20	1.40	1.05			0.35	0.40
	nom			0.15	1.35	1.00	0.55	0.35	0.30	0.35
	min			0.12	1.30	0.95			0.27	0.32

Note
1. Including plating thickness.
2. Visible depending upon used manufacturing technology.

sot1203_po

Outline version	References				European projection	Issue date
	IEC	JEDEC	JEITA			
SOT1203						~~10-04-02~~ 10-04-06

Figure 16. Package outline SOT1203 (XSON8)

All information provided in this document is subject to legal disclaimers.

© Nexperia B.V. 2017. All rights reserved.

X2SON8: plastic thermal enhanced extremely thin small outline package; no leads; 8 terminals; body 1.35 x 0.8 x 0.35 mm **SOT1233**

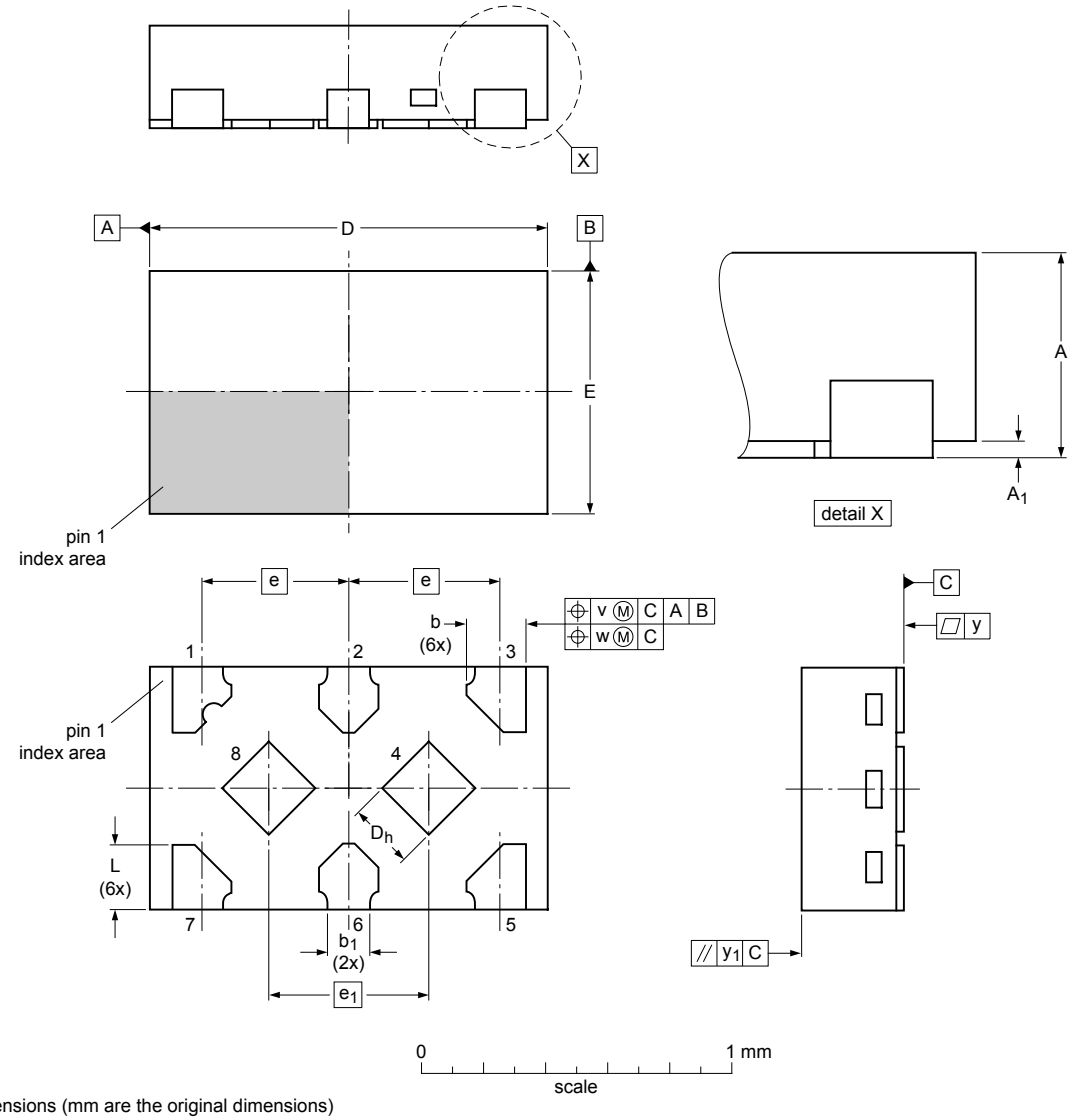

Dimensions (mm are the original dimensions)

Unit		A	A_1	b	b_1	D	D_h	E	e	e_1	L	v	w	y	y_1
mm	max	0.35	0.04	0.25		1.40	0.27	0.85			0.27				
	nom	0.32		0.20	0.15	1.35	0.22	0.80	0.5	0.54	0.22	0.1	0.05	0.05	0.05
	min	0.30	0.00	0.15	(ref)	1.30	0.17	0.75			0.17				

sot1233_po

Outline version	References				European projection	Issue date
	IEC	JEDEC	JEITA			
SOT1233		---				~~16-04-21~~ 17-01-05

Figure 17. Package outline SOT1233 (X2SON8)

All information provided in this document is subject to legal disclaimers.

© Nexperia B.V. 2017. All rights reserved.

13 Abbreviations

Table 11. Abbreviations

Acronym	Description
CMOS	Complementary Metal-Oxide Semiconductor
DUT	Device Under Test
ESD	ElectroStatic Discharge
HBM	Human Body Model
MM	Machine Model
TTL	Transistor-Transistor Logic

14 Revision history

Table 12. Revision history

Document ID	Release date	Data sheet status	Change notice	Supersedes
74LVC2G38 v.13	20170703	Product data sheet	-	74LVC2G38 v.12
Modifications:	• The format of this data sheet has been redesigned to comply with the identity guidelines of Nexperia. • Legal texts have been adapted to the new company name where appropriate. • Added type number 74LVC2G38GX (SOT1233 / X2SON8). • Type number 74LVC2G38GD removed.			
74LVC2G38 v.12	20161215	Product data sheet	-	74LVC2G38 v.11
Modifications:	• Table 7: The maximum limits for leakage current and supply current have changed.			
74LVC2G38 v.11	20130408	Product data sheet	-	74LVC2G38 v.10
Modifications:	• For type number 74LVC2G38GD XSON8U has changed to XSON8.			
74LVC2G38 v.10	20120628	Product data sheet	-	74LVC2G38 v.9
Modifications:	• For type number 74LVC2G38GM the SOT code has changed to SOT902-2.			
74LVC2G38 v.9	20111128	Product data sheet	-	74LVC2G38 v.8
Modifications:	• Legal pages updated.			
74LVC2G38 v.8	20101104	Product data sheet	-	74LVC2G38 v.7
74LVC2G38 v.7	20090320	Product data sheet	-	74LVC2G38 v.6
74LVC2G38 v.6	20080219	Product data sheet	-	74LVC2G38 v.5
74LVC2G38 v.5	20070904	Product data sheet	-	74LVC2G38 v.4
74LVC2G38 v.4	20060516	Product data sheet	-	74LVC2G38 v.3
74LVC2G38 v.3	20050201	Product specification	-	74LVC2G38 v.2
74LVC2G38 v.2	20041018	Product specification	-	74LVC2G38 v.1
74LVC2G38 v.1	20031027	Product specification	-	-

All information provided in this document is subject to legal disclaimers.

© Nexperia B.V. 2017. All rights reserved.

15 Legal information

15.1 Data sheet status

Document status[1][2]	Product status[3]	Definition
Objective [short] data sheet	Development	This document contains data from the objective specification for product development.
Preliminary [short] data sheet	Qualification	This document contains data from the preliminary specification.
Product [short] data sheet	Production	This document contains the product specification.

[1] Please consult the most recently issued document before initiating or completing a design.
[2] The term 'short data sheet' is explained in section "Definitions".
[3] The product status of device(s) described in this document may have changed since this document was published and may differ in case of multiple devices. The latest product status information is available on the Internet at URL http://www.nexperia.com.

15.2 Definitions

Draft — The document is a draft version only. The content is still under internal review and subject to formal approval, which may result in modifications or additions. Nexperia does not give any representations or warranties as to the accuracy or completeness of information included herein and shall have no liability for the consequences of use of such information.

Short data sheet — A short data sheet is an extract from a full data sheet with the same product type number(s) and title. A short data sheet is intended for quick reference only and should not be relied upon to contain detailed and full information. For detailed and full information see the relevant full data sheet, which is available on request via the local Nexperia sales office. In case of any inconsistency or conflict with the short data sheet, the full data sheet shall prevail.

Product specification — The information and data provided in a Product data sheet shall define the specification of the product as agreed between Nexperia and its customer, unless Nexperia and customer have explicitly agreed otherwise in writing. In no event however, shall an agreement be valid in which the Nexperia product is deemed to offer functions and qualities beyond those described in the Product data sheet.

15.3 Disclaimers

Limited warranty and liability — Information in this document is believed to be accurate and reliable. However, Nexperia does not give any representations or warranties, expressed or implied, as to the accuracy or completeness of such information and shall have no liability for the consequences of use of such information. Nexperia takes no responsibility for the content in this document if provided by an information source outside of Nexperia. In no event shall Nexperia be liable for any indirect, incidental, punitive, special or consequential damages (including - without limitation - lost profits, lost savings, business interruption, costs related to the removal or replacement of any products or rework charges) whether or not such damages are based on tort (including negligence), warranty, breach of contract or any other legal theory. Notwithstanding any damages that customer might incur for any reason whatsoever, Nexperia's aggregate and cumulative liability towards customer for the products described herein shall be limited in accordance with the Terms and conditions of commercial sale of Nexperia.

Right to make changes — Nexperia reserves the right to make changes to information published in this document, including without limitation specifications and product descriptions, at any time and without notice. This document supersedes and replaces all information supplied prior to the publication hereof.

Suitability for use — Nexperia products are not designed, authorized or warranted to be suitable for use in life support, life-critical or safety-critical systems or equipment, nor in applications where failure or malfunction of an Nexperia product can reasonably be expected to result in personal injury, death or severe property or environmental damage. Nexperia and its suppliers accept no liability for inclusion and/or use of Nexperia products in such equipment or applications and therefore such inclusion and/or use is at the customer's own risk.

Applications — Applications that are described herein for any of these products are for illustrative purposes only. Nexperia makes no representation or warranty that such applications will be suitable for the specified use without further testing or modification. Customers are responsible for the design and operation of their applications and products using Nexperia products, and Nexperia accepts no liability for any assistance with applications or customer product design. It is customer's sole responsibility to determine whether the Nexperia product is suitable and fit for the customer's applications and products planned, as well as for the planned application and use of customer's third party customer(s). Customers should provide appropriate design and operating safeguards to minimize the risks associated with their applications and products. Nexperia does not accept any liability related to any default, damage, costs or problem which is based on any weakness or default in the customer's applications or products, or the application or use by customer's third party customer(s). Customer is responsible for doing all necessary testing for the customer's applications and products using Nexperia products in order to avoid a default of the applications and the products or of the application or use by customer's third party customer(s). Nexperia does not accept any liability in this respect.

Limiting values — Stress above one or more limiting values (as defined in the Absolute Maximum Ratings System of IEC 60134) will cause permanent damage to the device. Limiting values are stress ratings only and (proper) operation of the device at these or any other conditions above those given in the Recommended operating conditions section (if present) or the Characteristics sections of this document is not warranted. Constant or repeated exposure to limiting values will permanently and irreversibly affect the quality and reliability of the device.

Terms and conditions of commercial sale — Nexperia products are sold subject to the general terms and conditions of commercial sale, as published at http://www.nexperia.com/profile/terms, unless otherwise agreed in a valid written individual agreement. In case an individual agreement is concluded only the terms and conditions of the respective agreement shall apply. Nexperia hereby expressly objects to applying the customer's general terms and conditions with regard to the purchase of Nexperia products by customer.

No offer to sell or license — Nothing in this document may be interpreted or construed as an offer to sell products that is open for acceptance or the grant, conveyance or implication of any license under any copyrights, patents or other industrial or intellectual property rights.

Export control — This document as well as the item(s) described herein may be subject to export control regulations. Export might require a prior authorization from competent authorities.

All information provided in this document is subject to legal disclaimers.

© Nexperia B.V. 2017. All rights reserved.

Non-automotive qualified products — Unless this data sheet expressly states that this specific Nexperia product is automotive qualified, the product is not suitable for automotive use. It is neither qualified nor tested in accordance with automotive testing or application requirements. Nexperia accepts no liability for inclusion and/or use of non-automotive qualified products in automotive equipment or applications. In the event that customer uses the product for design-in and use in automotive applications to automotive specifications and standards, customer (a) shall use the product without Nexperia's warranty of the product for such automotive applications, use and specifications, and (b) whenever customer uses the product for automotive applications beyond Nexperia's specifications such use shall be solely at customer's own risk, and (c) customer fully indemnifies Nexperia for any liability, damages or failed product claims resulting from customer design and use of the product for automotive applications beyond Nexperia's standard warranty and Nexperia's product specifications.

Translations — A non-English (translated) version of a document is for reference only. The English version shall prevail in case of any discrepancy between the translated and English versions.

15.4 Trademarks

Notice: All referenced brands, product names, service names and trademarks are the property of their respective owners.

All information provided in this document is subject to legal disclaimers.

© Nexperia B.V. 2017. All rights reserved.

Contents

1 General description 1
2 Features and benefits 1
3 Ordering information 2
4 Marking 2
5 Functional diagram 3
6 Pinning information 3
6.1 Pinning 3
6.2 Pin description 4
7 Functional description 4
8 Limiting values 5
9 Recommended operating conditions 5
10 Static characteristics 6
11 Dynamic characteristics 8
11.1 Waveforms and test circuit 8
12 Package outline 10
13 Abbreviations 18
14 Revision history 18
15 Legal information 19

Please be aware that important notices concerning this document and the product(s) described herein, have been included in section 'Legal information'.

© Nexperia B.V. 2017. **All rights reserved.**

For more information, please visit: http://www.nexperia.com
For sales office addresses, please send an email to: salesaddresses@nexperia.com

Date of release: 3 July 2017
Document identifier: 74LVC2G38

ООО «ЛайфЭлектроникс» “LifeElectronics” LLC

ИНН 7805602321 КПП 780501001 Р/С 40702810122510004610 ФАКБ "АБСОЛЮТ БАНК" (ЗАО) в г.Санкт-Петербурге К/С 30101810900000000703 БИК 044030703

Компания «Life Electronics» занимается поставками электронных компонентов импортного и отечественного производства от производителей и со складов крупных дистрибьюторов Европы, Америки и Азии.

С конца 2013 года компания активно расширяет линейку поставок компонентов по направлению коаксиальный кабель, кварцевые генераторы и конденсаторы (керамические, пленочные, электролитические), за счёт заключения дистрибьюторских договоров

Мы предлагаем:

- *Конкурентоспособные цены и скидки постоянным клиентам.*
- *Специальные условия для постоянных клиентов.*
- *Подбор аналогов.*
- *Поставку компонентов в любых объемах, удовлетворяющих вашим потребностям.*

- *Приемлемые сроки поставки, возможна ускоренная поставка.*
- *Доставку товара в любую точку России и стран СНГ.*
- *Комплексную поставку.*
- *Работу по проектам и поставку образцов.*
- *Формирование склада под заказчика.*

- *Сертификаты соответствия на поставляемую продукцию (по желанию клиента).*
- *Тестирование поставляемой продукции.*
- *Поставку компонентов, требующих военную и космическую приемку.*
- *Входной контроль качества.*
- *Наличие сертификата ISO.*

В составе нашей компании организован Конструкторский отдел, призванный помогать разработчикам, и инженерам.

Конструкторский отдел помогает осуществить:

- *Регистрацию проекта у производителя компонентов.*
- *Техническую поддержку проекта.*
- *Защиту от снятия компонента с производства.*
- *Оценку стоимости проекта по компонентам.*
- *Изготовление тестовой платы монтаж и пусконаладочные работы.*

Тел: +7 (812) 336 43 04 (многоканальный)
Email: org@lifeelectronics.ru

www.lifeelectronics.ru