# MC9S12C Family
# MC9S12GC Family
# Reference Manual

***HCS12***
***Microcontrollers***

MC9S12C128
Rev 01.24

05/2010

*freescale.com*

freescale™
semiconductor

To provide the most up-to-date information, the revision of our documents on the World Wide Web will be the most current. Your printed copy may be an earlier revision. To verify you have the latest information available, refer to:

http://freescale.com/

A full list of family members and options is included in the appendices.

The following revision history table summarizes changes contained in this document.

This document contains information for all constituent modules, with the exception of the S12 CPU. For S12 CPU information please refer to the CPU S12 Reference Manual.

## Revision History

| Date | Revision Level | Description |
|---|---|---|
| June, 2005 | 01.14 | New Book |
| July, 2005 | 01.15 | Removed 16MHz option for 128K, 96K and 64K versions<br>Minor corrections following review |
| Oct, 2005 | 01.16 | Added outstanding flash module descriptions<br>Added EPP package options<br>Corrected and Enhanced recommended PCB layouts |
| Dec, 2005 | 01.17 | Added note to PIM block diagram figure |
| Dec, 2005 | 01.18 | Added PIM rerouting information to 80-pin package diagram |
| Jan, 2006 | 01.19 | Modified LVI levels in electrical parameter section<br>Corrected TSCR2 typo in timer register listing |
| Mar, 2006 | 01.20 | Cleaned up Device Overview Section |
| May, 2006 | 01.21 | Added 0M66G to PartID table<br>Added units to MSCAN timing parameter table<br>Corrected missing overbars on pin names |
| Dec, 2006 | 01.22 | Corrected CRGFLG contents in register summary<br>Removed non existing part number options<br>Removed unintended symbol fonts from table A6 |
| May, 2007 | 01.23 | Updated ATD section<br>Corrected typos |
| May, 2010 | 01.24 | Updated TIM section |

Chapter 1 MC9S12C and MC9S12GC Device Overview (MC9S12C128) . 17
Chapter 2 Port Integration Module (PIM9C32) . . . . . 73
Chapter 3 Module Mapping Control (MMCV4) . . . . . 109
Chapter 4 Multiplexed External Bus Interface (MEBIV3) . . . . . 129
Chapter 5 Interrupt (INTV1) . . . . . 157
Chapter 6 Background Debug Module (BDMV4) . . . . . 165
Chapter 7 Debug Module (DBGV1) . . . . . 191
Chapter 8 Analog-to-Digital Converter (ATD10B8C) . . . . . 223
Chapter 9 Clocks and Reset Generator (CRGV4) . . . . . 251
Chapter 10 Scalable Controller Area Network (S12MSCANV2) . . . . . 287
Chapter 11 Oscillator (OSCV2) . . . . . 343
Chapter 12 Pulse-Width Modulator (PWM8B6CV1) . . . . . 347
Chapter 13 Serial Communications Interface (S12SCIV2) . . . . . 383
Chapter 14 Serial Peripheral Interface (SPIV3) . . . . . 413
Chapter 15 Timer Module (TIM16B8CV1) . . . . . 435
Chapter 16 Dual Output Voltage Regulator (VREG3V3V2) . . . . . 463
Chapter 17 16 Kbyte Flash Module (S12FTS16KV1) . . . . . 471
Chapter 18 32 Kbyte Flash Module (S12FTS32KV1) . . . . . 503
Chapter 19 64 Kbyte Flash Module (S12FTS64KV4) . . . . . 537
Chapter 20 96 Kbyte Flash Module (S12FTS96KV1) . . . . . 575
Chapter 21 128 Kbyte Flash Module (S12FTS128K1V1) . . . . . 613
Appendix A Electrical Characteristics. . . . . 647
Appendix B Emulation Information . . . . . 679
Appendix C Package Information . . . . . 681
Appendix D Derivative Differences . . . . . 685

**Appendix E Ordering Information . . . . . .686**

## Chapter 1
## MC9S12C and MC9S12GC Device Overview (MC9S12C128)


1.1 Introduction . . . 17
1.1.1 Features . . . 17
1.1.2 Modes of Operation . . . 19
1.1.3 Block Diagram . . . 20
1.2 Memory Map and Registers . . . 21
1.2.1 Device Memory Map . . . 21
1.2.2 Detailed Register Map . . . 27
1.2.3 Part ID Assignments . . . 44
1.3 Signal Description . . . 45
1.3.1 Device Pinouts . . . 45
1.3.2 Signal Properties Summary . . . 48
1.3.3 Pin Initialization for 48- and 52-Pin LQFP Bond Out Versions . . . 49
1.3.4 Detailed Signal Descriptions . . . 50
1.3.5 Power Supply Pins . . . 55
1.4 System Clock Description . . . 57
1.5 Modes of Operation . . . 57
1.5.1 Chip Configuration Summary . . . 57
1.5.2 Security . . . 58
1.5.3 Low-Power Modes . . . 59
1.6 Resets and Interrupts . . . 60
1.6.1 Vectors . . . 60
1.6.2 Resets . . . 62
1.7 Device Specific Information and Module Dependencies . . . 62
1.7.1 PPAGE . . . 62
1.7.2 BDM Alternate Clock . . . 63
1.7.3 Extended Address Range Emulation Implications . . . 63
1.7.4 VREGEN . . . 64
1.7.5 $V_{DD1}$, $V_{DD2}$, $V_{SS1}$, $V_{SS2}$ . . . 64
1.7.6 Clock Reset Generator And VREG Interface . . . 64
1.7.7 Analog-to-Digital Converter . . . 64
1.7.8 MODRR Register Port T And Port P Mapping . . . 64
1.7.9 Port AD Dependency On PIM And ATD Registers . . . 64
1.8 Recommended Printed Circuit Board Layout . . . 65


## Chapter 2
## Port Integration Module (PIM9C32) Block Description


2.1 Introduction . . . 73
2.1.1 Features . . . 73

2.1.2 Block Diagram . . . 74
2.2 Signal Description . . . 76
2.3 Memory Map and Registers . . . 77
2.3.1 Module Memory Map . . . 77
2.3.2 Register Descriptions . . . 80
2.4 Functional Description . . . 104
2.4.1 Registers . . . 104
2.4.2 Port Descriptions . . . 105
2.4.3 Port A, B, E and BKGD Pin . . . 107
2.4.4 External Pin Descriptions . . . 107
2.4.5 Low Power Options . . . 107
2.5 Initialization Information . . . 107
2.5.1 Reset Initialization . . . 107
2.6 Interrupts . . . 108
2.6.1 Interrupt Sources . . . 108
2.6.2 Recovery from STOP . . . 108
2.7 Application Information . . . 108

## Chapter 3
## Module Mapping Control (MMCV4) Block Description

3.1 Introduction . . . 109
3.1.1 Features . . . 110
3.1.2 Modes of Operation . . . 110
3.2 External Signal Description . . . 110
3.3 Memory Map and Register Definition . . . 110
3.3.1 Module Memory Map . . . 110
3.3.2 Register Descriptions . . . 112
3.4 Functional Description . . . 122
3.4.1 Bus Control . . . 122
3.4.2 Address Decoding . . . 122
3.4.3 Memory Expansion . . . 124

## Chapter 4
## Multiplexed External Bus Interface (MEBIV3)

4.1 Introduction . . . 129
4.1.1 Features . . . 129
4.1.2 Modes of Operation . . . 131
4.2 External Signal Description . . . 131
4.3 Memory Map and Register Definition . . . 133
4.3.1 Module Memory Map . . . 134
4.3.2 Register Descriptions . . . 134
4.4 Functional Description . . . 150
4.4.1 Detecting Access Type from External Signals . . . 150
4.4.2 Stretched Bus Cycles . . . 151

4.4.3 Modes of Operation . . . . . 151
4.4.4 Internal Visibility . . . . . 156
4.4.5 Low-Power Options . . . . . 156

## Chapter 5
## Interrupt (INTV1) Block Description

5.1 Introduction . . . . . 157
5.1.1 Features . . . . . 158
5.1.2 Modes of Operation . . . . . 158
5.2 External Signal Description . . . . . 159
5.3 Memory Map and Register Definition . . . . . 159
5.3.1 Module Memory Map . . . . . 159
5.3.2 Register Descriptions . . . . . 159
5.4 Functional Description . . . . . 161
5.4.1 Low-Power Modes . . . . . 162
5.5 Resets . . . . . 162
5.6 Interrupts . . . . . 162
5.6.1 Interrupt Registers . . . . . 162
5.6.2 Highest Priority I-Bit Maskable Interrupt . . . . . 162
5.6.3 Interrupt Priority Decoder . . . . . 163
5.7 Exception Priority . . . . . 163

## Chapter 6
## Background Debug Module (BDMV4) Block Description

6.1 Introduction . . . . . 165
6.1.1 Features . . . . . 165
6.1.2 Modes of Operation . . . . . 166
6.2 External Signal Description . . . . . 167
6.2.1 BKGD — Background Interface Pin . . . . . 167
6.2.2 $\overline{\text{TAGHI}}$ — High Byte Instruction Tagging Pin . . . . . 167
6.2.3 $\overline{\text{TAGLO}}$ — Low Byte Instruction Tagging Pin . . . . . 167
6.3 Memory Map and Register Definition . . . . . 168
6.3.1 Module Memory Map . . . . . 168
6.3.2 Register Descriptions . . . . . 169
6.4 Functional Description . . . . . 174
6.4.1 Security . . . . . 174
6.4.2 Enabling and Activating BDM . . . . . 174
6.4.3 BDM Hardware Commands . . . . . 175
6.4.4 Standard BDM Firmware Commands . . . . . 176
6.4.5 BDM Command Structure . . . . . 177
6.4.6 BDM Serial Interface . . . . . 179
6.4.7 Serial Interface Hardware Handshake Protocol . . . . . 182
6.4.8 Hardware Handshake Abort Procedure . . . . . 184
6.4.9 SYNC — Request Timed Reference Pulse . . . . . 187

6.4.10 Instruction Tracing . . . 187
6.4.11 Instruction Tagging . . . 188
6.4.12 Serial Communication Time-Out . . . 188
6.4.13 Operation in Wait Mode . . . 189
6.4.14 Operation in Stop Mode . . . 189

## Chapter 7
## Debug Module (DBGV1) Block Description

7.1 Introduction . . . 191
7.1.1 Features . . . 191
7.1.2 Modes of Operation . . . 193
7.1.3 Block Diagram . . . 193
7.2 External Signal Description . . . 195
7.3 Memory Map and Register Definition . . . 196
7.3.1 Module Memory Map . . . 196
7.3.2 Register Descriptions . . . 196
7.4 Functional Description . . . 212
7.4.1 DBG Operating in BKP Mode . . . 212
7.4.2 DBG Operating in DBG Mode . . . 214
7.4.3 Breakpoints . . . 221
7.5 Resets . . . 222
7.6 Interrupts . . . 222

## Chapter 8
## Analog-to-Digital Converter (ATD10B8C) Block Description

8.1 Introduction . . . 223
8.1.1 Features . . . 223
8.1.2 Modes of Operation . . . 223
8.1.3 Block Diagram . . . 224
8.2 Signal Description . . . 225
8.2.1 AN7 / ETRIG / PAD7 . . . 225
8.2.2 AN6 / PAD6 . . . 225
8.2.3 AN5 / PAD5 . . . 225
8.2.4 AN4 / PAD4 . . . 225
8.2.5 AN3 / PAD3 . . . 225
8.2.6 AN2 / PAD2 . . . 225
8.2.7 AN1 / PAD1 . . . 225
8.2.8 AN0 / PAD0 . . . 225
8.2.9 $V_{RH}$, $V_{RL}$ . . . 225
8.2.10 $V_{DDA}$, $V_{SSA}$ . . . 225
8.3 Memory Map and Registers . . . 226
8.3.1 Module Memory Map . . . 226
8.3.2 Register Descriptions . . . 230

8.4 Functional Description . . . 245
8.4.1 Analog Sub-block . . . 245
8.4.2 Digital Sub-block . . . 246
8.5 Initialization/Application Information . . . 247
8.5.1 Setting up and starting an A/D conversion . . . 247
8.5.2 Aborting an A/D conversion . . . 248
8.6 Resets . . . 248
8.7 Interrupts . . . 249

## Chapter 9
## Clocks and Reset Generator (CRGV4) Block Description

9.1 Introduction . . . 251
9.1.1 Features . . . 251
9.1.2 Modes of Operation . . . 252
9.1.3 Block Diagram . . . 252
9.2 External Signal Description . . . 253
9.2.1 $V_{DDPLL}$, $V_{SSPLL}$ — PLL Operating Voltage, PLL Ground . . . 253
9.2.2 XFC — PLL Loop Filter Pin . . . 253
9.2.3 $\overline{RESET}$ — Reset Pin . . . 254
9.3 Memory Map and Register Definition . . . 254
9.3.1 Module Memory Map . . . 254
9.3.2 Register Descriptions . . . 255
9.4 Functional Description . . . 266
9.4.1 Phase Locked Loop (PLL) . . . 266
9.4.2 System Clocks Generator . . . 269
9.4.3 Clock Monitor (CM) . . . 270
9.4.4 Clock Quality Checker . . . 270
9.4.5 Computer Operating Properly Watchdog (COP) . . . 272
9.4.6 Real-Time Interrupt (RTI) . . . 272
9.4.7 Modes of Operation . . . 273
9.4.8 Low-Power Operation in Run Mode . . . 274
9.4.9 Low-Power Operation in Wait Mode . . . 274
9.4.10 Low-Power Operation in Stop Mode . . . 278
9.5 Resets . . . 282
9.5.1 Clock Monitor Reset . . . 284
9.5.2 Computer Operating Properly Watchdog (COP) Reset . . . 284
9.5.3 Power-On Reset, Low Voltage Reset . . . 285
9.6 Interrupts . . . 286
9.6.1 Real-Time Interrupt . . . 286
9.6.2 PLL Lock Interrupt . . . 286
9.6.3 Self-Clock Mode Interrupt . . . 286

## Chapter 10
## Freescale's Scalable Controller Area Network (S12MSCANV2)


10.1 Introduction . . . 287
10.1.1 Glossary . . . 287
10.1.2 Block Diagram . . . 288
10.1.3 Features . . . 288
10.1.4 Modes of Operation . . . 289
10.2 External Signal Description . . . 289
10.2.1 RXCAN — CAN Receiver Input Pin . . . 289
10.2.2 TXCAN — CAN Transmitter Output Pin . . . 289
10.2.3 CAN System . . . 289
10.3 Memory Map and Register Definition . . . 290
10.3.1 Module Memory Map . . . 290
10.3.2 Register Descriptions . . . 292
10.3.3 Programmer's Model of Message Storage . . . 314
10.4 Functional Description . . . 323
10.4.1 General . . . 323
10.4.2 Message Storage . . . 324
10.4.3 Identifier Acceptance Filter . . . 327
10.4.4 Modes of Operation . . . 333
10.4.5 Low-Power Options . . . 334
10.4.6 Reset Initialization . . . 339
10.4.7 Interrupts . . . 339
10.5 Initialization/Application Information . . . 341
10.5.1 MSCAN initialization . . . 341


## Chapter 11
## Oscillator (OSCV2) Block Description


11.1 Introduction . . . 343
11.1.1 Features . . . 343
11.1.2 Modes of Operation . . . 343
11.2 External Signal Description . . . 344
11.2.1 $V_{DDPLL}$ and $V_{SSPLL}$ — PLL Operating Voltage, PLL Ground . . . 344
11.2.2 EXTAL and XTAL — Clock/Crystal Source Pins . . . 344
11.2.3 XCLKS — Colpitts/Pierce Oscillator Selection Signal . . . 345
11.3 Memory Map and Register Definition . . . 346
11.4 Functional Description . . . 346
11.4.1 Amplitude Limitation Control (ALC) . . . 346
11.4.2 Clock Monitor (CM) . . . 346
11.5 Interrupts . . . 346


## Chapter 12
## Pulse-Width Modulator (PWM8B6CV1) Block Description


12.1 Introduction . . . 347

12.1.1 Features . . . 347
12.1.2 Modes of Operation . . . 347
12.1.3 Block Diagram . . . 348
12.2 External Signal Description . . . 348
12.2.1 PWM5 — Pulse Width Modulator Channel 5 Pin . . . 348
12.2.2 PWM4 — Pulse Width Modulator Channel 4 Pin . . . 348
12.2.3 PWM3 — Pulse Width Modulator Channel 3 Pin . . . 348
12.2.4 PWM2 — Pulse Width Modulator Channel 2 Pin . . . 349
12.2.5 PWM1 — Pulse Width Modulator Channel 1 Pin . . . 349
12.2.6 PWM0 — Pulse Width Modulator Channel 0 Pin . . . 349
12.3 Memory Map and Register Definition . . . 349
12.3.1 Module Memory Map . . . 349
12.3.2 Register Descriptions . . . 351
12.4 Functional Description . . . 371
12.4.1 PWM Clock Select . . . 371
12.4.2 PWM Channel Timers . . . 374
12.5 Resets . . . 381
12.6 Interrupts . . . 381

## Chapter 13
## Serial Communications Interface (S12SCIV2) Block Description

13.1 Introduction . . . 383
13.1.1 Glossary . . . 383
13.1.2 Features . . . 383
13.1.3 Modes of Operation . . . 384
13.1.4 Block Diagram . . . 385
13.2 External Signal Description . . . 385
13.2.1 TXD-SCI Transmit Pin . . . 385
13.2.2 RXD-SCI Receive Pin . . . 385
13.3 Memory Map and Registers . . . 386
13.3.1 Module Memory Map . . . 386
13.3.2 Register Descriptions . . . 386
13.4 Functional Description . . . 394
13.4.1 Data Format . . . 395
13.4.2 Baud Rate Generation . . . 396
13.4.3 Transmitter . . . 397
13.4.4 Receiver . . . 400
13.4.5 Single-Wire Operation . . . 409
13.4.6 Loop Operation . . . 409
13.5 Initialization Information . . . 409
13.5.1 Reset Initialization . . . 409
13.5.2 Interrupt Operation . . . 410
13.5.3 Recovery from Wait Mode . . . 411

## Chapter 14
## Serial Peripheral Interface (SPIV3) Block Description


14.1 Introduction . . . 413
14.1.1 Features . . . 413
14.1.2 Modes of Operation . . . 413
14.1.3 Block Diagram . . . 414
14.2 External Signal Description . . . 414
14.2.1 MOSI — Master Out/Slave In Pin . . . 414
14.2.2 MISO — Master In/Slave Out Pin . . . 415
14.2.3 $\overline{SS}$ — Slave Select Pin . . . 415
14.2.4 SCK — Serial Clock Pin . . . 415
14.3 Memory Map and Register Definition . . . 415
14.3.1 Module Memory Map . . . 415
14.3.2 Register Descriptions . . . 416
14.4 Functional Description . . . 423
14.4.1 Master Mode . . . 424
14.4.2 Slave Mode . . . 425
14.4.3 Transmission Formats . . . 426
14.4.4 SPI Baud Rate Generation . . . 429
14.4.5 Special Features . . . 430
14.4.6 Error Conditions . . . 431
14.4.7 Operation in Run Mode . . . 432
14.4.8 Operation in Wait Mode . . . 432
14.4.9 Operation in Stop Mode . . . 432
14.5 Reset . . . 433
14.6 Interrupts . . . 433
14.6.1 MODF . . . 433
14.6.2 SPIF . . . 433
14.6.3 SPTEF . . . 433


## Chapter 15
## Timer Module (TIM16B8CV1) Block Description


15.1 Introduction . . . 435
15.1.1 Features . . . 435
15.1.2 Modes of Operation . . . 436
15.1.3 Block Diagrams . . . 436
15.2 External Signal Description . . . 438
15.2.1 IOC7 — Input Capture and Output Compare Channel 7 Pin . . . 438
15.2.2 IOC6 — Input Capture and Output Compare Channel 6 Pin . . . 438
15.2.3 IOC5 — Input Capture and Output Compare Channel 5 Pin . . . 438
15.2.4 IOC4 — Input Capture and Output Compare Channel 4 Pin . . . 438
15.2.5 IOC3 — Input Capture and Output Compare Channel 3 Pin . . . 438
15.2.6 IOC2 — Input Capture and Output Compare Channel 2 Pin . . . 439
15.2.7 IOC1 — Input Capture and Output Compare Channel 1 Pin . . . 439

15.2.8 IOC0 — Input Capture and Output Compare Channel 0 Pin . . . . . 439
15.3 Memory Map and Register Definition . . . . . 439
15.3.1 Module Memory Map . . . . . 439
15.3.2 Register Descriptions . . . . . 441
15.4 Functional Description . . . . . 457
15.4.1 Prescaler . . . . . 458
15.4.2 Input Capture . . . . . 459
15.4.3 Output Compare . . . . . 459
15.4.4 Pulse Accumulator . . . . . 460
15.4.5 Event Counter Mode . . . . . 460
15.4.6 Gated Time Accumulation Mode . . . . . 461
15.5 Resets . . . . . 461
15.6 Interrupts . . . . . 461
15.6.1 Channel [7:0] Interrupt (C[7:0]F) . . . . . 461
15.6.2 Pulse Accumulator Input Interrupt (PAOVI) . . . . . 462
15.6.3 Pulse Accumulator Overflow Interrupt (PAOVF) . . . . . 462
15.6.4 Timer Overflow Interrupt (TOF) . . . . . 462

## Chapter 16
## Dual Output Voltage Regulator (VREG3V3V2) Block Description

16.1 Introduction . . . . . 463
16.1.1 Features . . . . . 463
16.1.2 Modes of Operation . . . . . 463
16.1.3 Block Diagram . . . . . 464
16.2 External Signal Description . . . . . 465
16.2.1 $V_{DDR}$ — Regulator Power Input . . . . . 465
16.2.2 $V_{DDA}$, $V_{SSA}$ — Regulator Reference Supply . . . . . 465
16.2.3 $V_{DD}$, $V_{SS}$ — Regulator Output1 (Core Logic) . . . . . 466
16.2.4 $V_{DDPLL}$, $V_{SSPLL}$ — Regulator Output2 (PLL) . . . . . 466
16.2.5 $V_{REGEN}$ — Optional Regulator Enable . . . . . 466
16.3 Memory Map and Register Definition . . . . . 466
16.3.1 Module Memory Map . . . . . 466
16.3.2 Register Descriptions . . . . . 467
16.4 Functional Description . . . . . 467
16.4.1 REG — Regulator Core . . . . . 468
16.4.2 Full-Performance Mode . . . . . 468
16.4.3 Reduced-Power Mode . . . . . 468
16.4.4 LVD — Low-Voltage Detect . . . . . 468
16.4.5 POR — Power-On Reset . . . . . 468
16.4.6 LVR — Low-Voltage Reset . . . . . 468
16.4.7 CTRL — Regulator Control . . . . . 468
16.5 Resets . . . . . 469
16.5.1 Power-On Reset . . . . . 469
16.5.2 Low-Voltage Reset . . . . . 469

16.6 Interrupts . . . . . 469
16.6.1 LVI — Low-Voltage Interrupt . . . . . 469

## Chapter 17
## 16 Kbyte Flash Module (S12FTS16KV1)

17.1 Introduction . . . . . 471
17.1.1 Glossary . . . . . 471
17.1.2 Features . . . . . 471
17.1.3 Modes of Operation . . . . . 472
17.1.4 Block Diagram . . . . . 472
17.2 External Signal Description . . . . . 472
17.3 Memory Map and Registers . . . . . 473
17.3.1 Module Memory Map . . . . . 473
17.3.2 Register Descriptions . . . . . 475
17.4 Functional Description . . . . . 486
17.4.1 Flash Command Operations . . . . . 486
17.4.2 Operating Modes . . . . . 500
17.4.3 Flash Module Security . . . . . 500
17.4.4 Flash Reset Sequence . . . . . 502
17.4.5 Interrupts . . . . . 502

## Chapter 18
## 32 Kbyte Flash Module (S12FTS32KV1)

18.1 Introduction . . . . . 503
18.1.1 Glossary . . . . . 503
18.1.2 Features . . . . . 503
18.1.3 Modes of Operation . . . . . 504
18.1.4 Block Diagram . . . . . 504
18.2 External Signal Description . . . . . 504
18.3 Memory Map and Registers . . . . . 505
18.3.1 Module Memory Map . . . . . 505
18.3.2 Register Descriptions . . . . . 508
18.4 Functional Description . . . . . 520
18.4.1 Flash Command Operations . . . . . 520
18.4.2 Operating Modes . . . . . 534
18.4.3 Flash Module Security . . . . . 534
18.4.4 Flash Reset Sequence . . . . . 536
18.4.5 Interrupts . . . . . 536

## Chapter 19
## 64 Kbyte Flash Module (S12FTS64KV4)

19.1 Introduction . . . . . 537
19.1.1 Glossary . . . . . 537
19.1.2 Features . . . . . 537

19.1.3 Modes of Operation . . . . . 538
19.1.4 Block Diagram . . . . . 538
19.2 External Signal Description . . . . . 539
19.3 Memory Map and Registers . . . . . 539
19.3.1 Module Memory Map . . . . . 539
19.3.2 Register Descriptions . . . . . 545
19.4 Functional Description . . . . . 557
19.4.1 Flash Command Operations . . . . . 557
19.4.2 Operating Modes . . . . . 571
19.4.3 Flash Module Security . . . . . 571
19.4.4 Flash Reset Sequence . . . . . 573
19.4.5 Interrupts . . . . . 573

## Chapter 20
## 96 Kbyte Flash Module (S12FTS96KV1)

20.1 Introduction . . . . . 575
20.1.1 Glossary . . . . . 575
20.1.2 Features . . . . . 575
20.1.3 Modes of Operation . . . . . 576
20.1.4 Block Diagram . . . . . 576
20.2 External Signal Description . . . . . 577
20.3 Memory Map and Registers . . . . . 577
20.3.1 Module Memory Map . . . . . 577
20.3.2 Register Descriptions . . . . . 583
20.4 Functional Description . . . . . 595
20.4.1 Flash Command Operations . . . . . 595
20.4.2 Operating Modes . . . . . 609
20.4.3 Flash Module Security . . . . . 609
20.4.4 Flash Reset Sequence . . . . . 611
20.4.5 Interrupts . . . . . 611

## Chapter 21
## 128 Kbyte Flash Module (S12FTS128K1V1)

21.1 Introduction . . . . . 613
21.1.1 Glossary . . . . . 613
21.1.2 Features . . . . . 613
21.1.3 Modes of Operation . . . . . 614
21.1.4 Block Diagram . . . . . 614
21.2 External Signal Description . . . . . 614
21.3 Memory Map and Registers . . . . . 615
21.3.1 Module Memory Map . . . . . 615
21.3.2 Register Descriptions . . . . . 618
21.4 Functional Description . . . . . 630
21.4.1 Flash Command Operations . . . . . 630

21.4.2 Operating Modes . . . . . 644
21.4.3 Flash Module Security . . . . . 644
21.4.4 Flash Reset Sequence . . . . . 646
21.4.5 Interrupts . . . . . 646

## Appendix A
## Electrical Characteristics

A.1 General . . . . . 647
A.2 ATD Characteristics . . . . . 658
A.3 MSCAN. . . . . 663
A.4 Reset, Oscillator and PLL . . . . . 663
A.5 NVM, Flash, and EEPROM . . . . . 669
A.6 SPI . . . . . 673
A.7 Voltage Regulator . . . . . 677

## Appendix B
## Emulation Information

B.1 General . . . . . 679

## Appendix C
## Package Information

C.1 General . . . . . 681

## Appendix D
## Derivative Differences

## Appendix E
## Ordering Information

# Chapter 1
# MC9S12C and MC9S12GC Device Overview (MC9S12C128)

## 1.1 Introduction

The MC9S12C-Family / MC9S12GC-Family are 48/52/80 pin Flash-based MCU families, which deliver the power and flexibility of the 16-bit core to a whole new range of cost and space sensitive, general purpose industrial and automotive network applications. All MC9S12C-Family / MC9S12GC-Family members feature standard on-chip peripherals including a 16-bit central processing unit (CPU12), up to 128K bytes of Flash EEPROM, up to 4K bytes of RAM, an asynchronous serial communications interface (SCI), a serial peripheral interface (SPI), an 8-channel 16-bit timer module (TIM), a 6-channel 8-bit pulse width modulator (PWM), an 8-channel, 10-bit analog-to-digital converter (ADC).

The MC9S12C128-Family members also feature a CAN 2.0 A, B software compatible module (MSCAN12).

All MC9S12C-Family / MC9S12GC-Family devices feature full 16-bit data paths throughout. The inclusion of a PLL circuit allows power consumption and performance to be adjusted to suit operational requirements. In addition to the I/O ports available in each module, up to 10 dedicated I/O port bits are available with wake-up capability from stop or wait mode. The  devices are available in 48-, 52-, and 80-pin QFP packages, with the 80-pin version pin compatible to the HCS12 A, B, and D Family derivatives.

### 1.1.1 Features

- 16-bit HCS12 core:
  - HCS12 CPU
    - Upward compatible with M68HC11 instruction set
    - Interrupt stacking and programmer’s model identical to M68HC11
    - Instruction queue
    - Enhanced indexed addressing
  - MMC (memory map and interface)
  - INT (interrupt control)
  - BDM (background debug mode)
  - DBG12 (enhanced debug12 module, including breakpoints and change-of-flow trace buffer)
  - MEBI (multiplexed expansion bus interface) available only in 80-pin package version
- Wake-up interrupt inputs:
  - Up to 12 port bits available for wake up interrupt function with digital filtering

- Memory options:
  - 16K or 32Kbyte Flash EEPROM (erasable in 512-byte sectors)
    64K, 96K, or 128Kbyte Flash EEPROM (erasable in 1024-byte sectors)
  - 1K, 2K or 4K Byte RAM
- Analog-to-digital converters:
  - One 8-channel module with 10-bit resolution
  - External conversion trigger capability
- Available on MC9S12C Family:
  - One 1M bit per second, CAN 2.0 A, B software compatible module
  - Five receive and three transmit buffers
  - Flexible identifier filter programmable as 2 x 32 bit, 4 x 16 bit, or 8 x 8 bit
  - Four separate interrupt channels for Rx, Tx, error, and wake-up
  - Low-pass filter wake-up function
  - Loop-back for self test operation
- Timer module (TIM):
  - 8-channel timer
  - Each channel configurable as either input capture or output compare
  - Simple PWM mode
  - Modulo reset of timer counter
  - 16-bit pulse accumulator
  - External event counting
  - Gated time accumulation
- PWM module:
  - Programmable period and duty cycle
  - 8-bit 6-channel or 16-bit 3-channel
  - Separate control for each pulse width and duty cycle
  - Center-aligned or left-aligned outputs
  - Programmable clock select logic with a wide range of frequencies
  - Fast emergency shutdown input
- Serial interfaces:
  - One asynchronous serial communications interface (SCI)
  - One synchronous serial peripheral interface (SPI)
- CRG (clock reset generator module)
  - Windowed COP watchdog
  - Real time interrupt
  - Clock monitor
  - Pierce or low current Colpitts oscillator
  - Phase-locked loop clock frequency multiplier
  - Limp home mode in absence of external clock
  - Low power 0.5MHz to 16MHz crystal oscillator reference clock

- Operating frequency:
  - 32MHz equivalent to 16MHz bus speed for single chip
  - 32MHz equivalent to 16MHz bus speed in expanded bus modes
  - Option of 9S12C Family: 50MHz equivalent to 25MHz bus speed
  - All 9S12GC Family members allow a 50MHz operating frequency.
- Internal 2.5V regulator:
  - Supports an input voltage range from 2.97V to 5.5V
  - Low power mode capability
  - Includes low voltage reset (LVR) circuitry
  - Includes low voltage interrupt (LVI) circuitry
- 48-pin LQFP, 52-pin LQFP, or 80-pin QFP package:
  - Up to 58 I/O lines with 5V input and drive capability (80-pin package)
  - Up to 2 dedicated 5V input only lines (IRQ, XIRQ)
  - 5V 8 A/D converter inputs and 5V I/O
- Development support:
  - Single-wire background debug™ mode (BDM)
  - On-chip hardware breakpoints
  - Enhanced DBG12 debug features

### 1.1.2 Modes of Operation

User modes (expanded modes are only available in the 80-pin package version).

- Normal and emulation operating modes:
  - Normal single-chip mode
  - Normal expanded wide mode
  - Normal expanded narrow mode
  - Emulation expanded wide mode
  - Emulation expanded narrow mode
- Special operating modes:
  - Special single-chip mode with active background debug mode
  - Special test mode **(Freescale use only)**
  - Special peripheral mode **(Freescale use only)**
- Low power modes:
  - Stop mode
  - Pseudo stop mode
  - Wait mode

## 1.1.3 Block Diagram

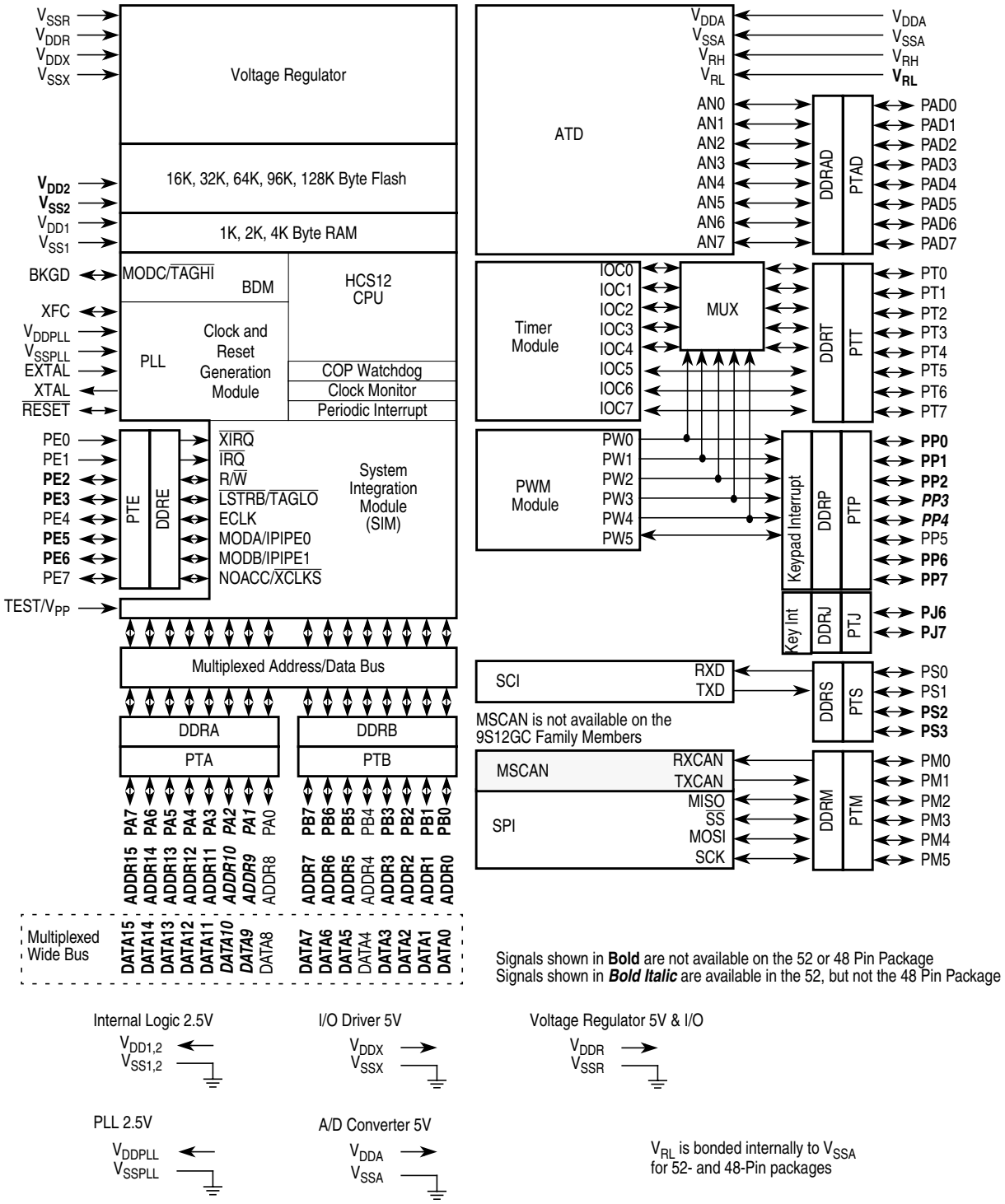


**Figure 1-1. MC9S12C-Family / MC9S12GC-Family Block Diagram**

## 1.2 Memory Map and Registers

### 1.2.1 Device Memory Map

Table 1-1 shows the device register map after reset. Figure 1-2 through Figure 1-6 illustrate the full device memory map.

**Table 1-1. Device Register Map Overview**

| Address | Module | Size |
|---|---|---|
| 0x0000–0x0017 | Core (ports A, B, E, modes, inits, test) | 24 |
| 0x0018 | Reserved | 1 |
| 0x0019 | Voltage regulator (VREG) | 1 |
| 0x001A–0x001B | Device ID register | 2 |
| 0x001C–0x001F | Core (MEMSIZ, IRQ, HPRIO) | 4 |
| 0x0020–0x002F | Core (DBG) | 16 |
| 0x0030–0x0033 | Core (PPAGE[1]) | 4 |
| 0x0034–0x003F | Clock and reset generator (CRG) | 12 |
| 0x0040–0x006F | Standard timer module (TIM) | 48 |
| 0x0070–0x007F | Reserved | 16 |
| 0x0080–0x009F | Analog-to-digital converter (ATD) | 32 |
| 0x00A0–0x00C7 | Reserved | 40 |
| 0x00C8–0x00CF | Serial communications interface (SCI) | 8 |
| 0x00D0–0x00D7 | Reserved | 8 |
| 0x00D8–0x00DF | Serial peripheral interface (SPI) | 8 |
| 0x00E0–0x00FF | Pulse width modulator (PWM) | 32 |
| 0x0100–0x010F | Flash control register | 16 |
| 0x0110–0x013F | Reserved | 48 |
| 0x0140–0x017F | Scalable controller area network (MSCAN)[2] | 64 |
| 0x0180–0x023F | Reserved | 192 |
| 0x0240–0x027F | Port integration module (PIM) | 64 |
| 0x0280–0x03FF | Reserved | 384 |

1. External memory paging is not supported on this device (Section 1.7.1, “PPAGE”).
2. Not available on MC9S12GC Family devices

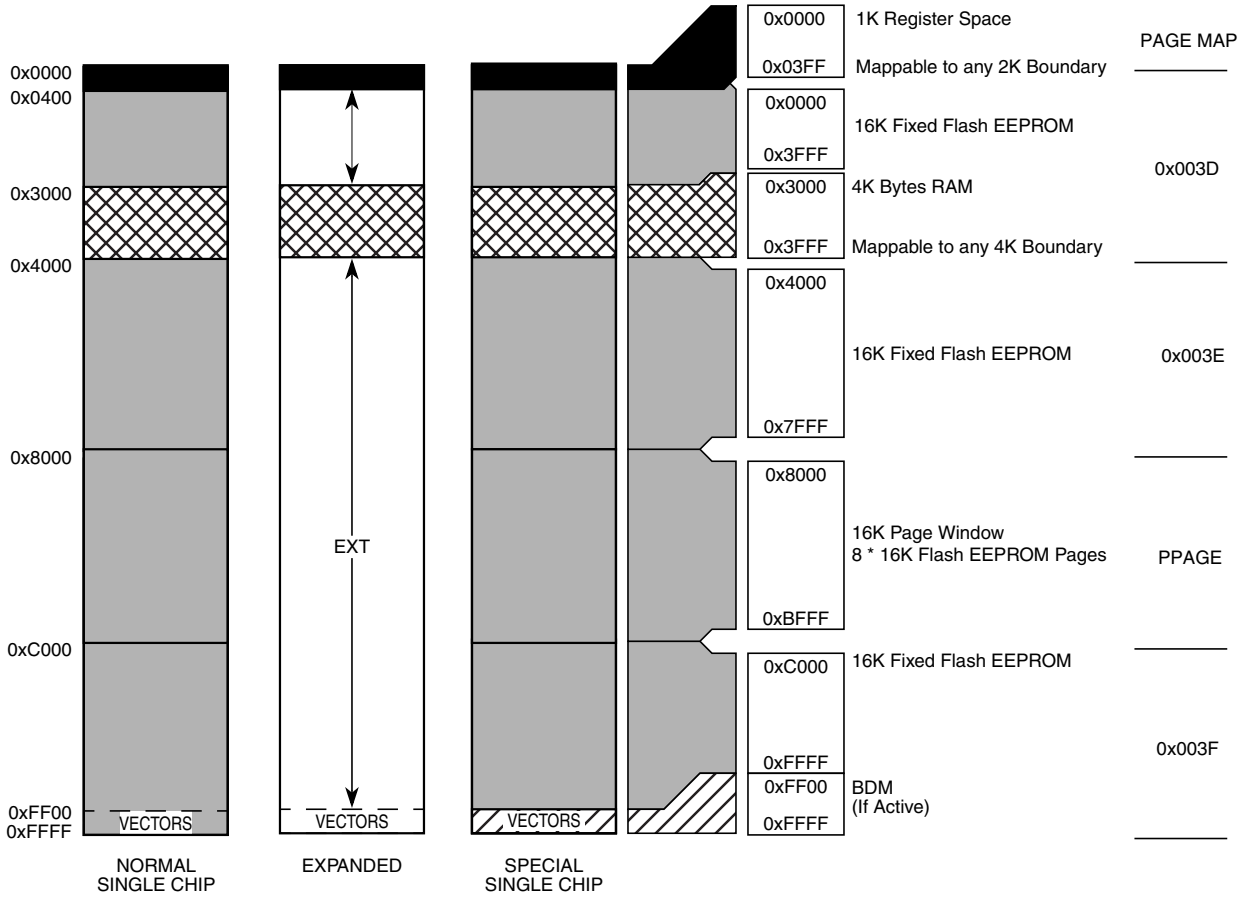


The figure shows a useful map, which is not the map out of reset. After reset the map is:

0x0000–0x03FF: Register Space
0x0000–0x0FFF: 4K RAM (only 3K visible 0x0400–0x0FFF)

Flash erase sector size is 1024 bytes

**Figure 1-2. MC9S12C128 and MC9S12GC128 User Configurable Memory Map**

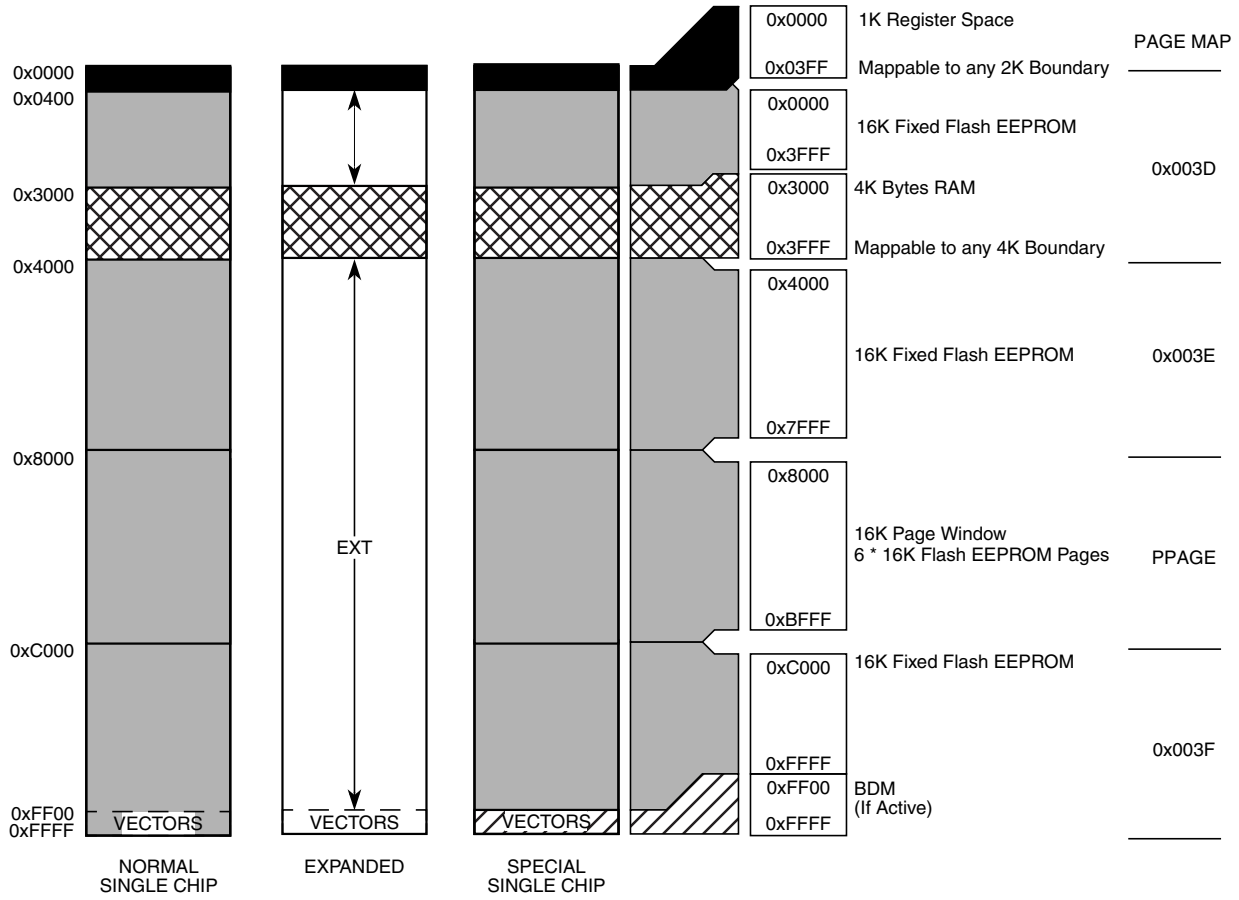


The figure shows a useful map, which is not the map out of reset. After reset the map is:

0x0000–0x03FF: Register Space
0x0000–0x0FFF: 4K RAM (only 3K visible 0x0400–0x0FFF)

Flash erase sector size is 1024 bytes

**Figure 1-3. MC9S12C96 and MC9S12GC96 User Configurable Memory Map**

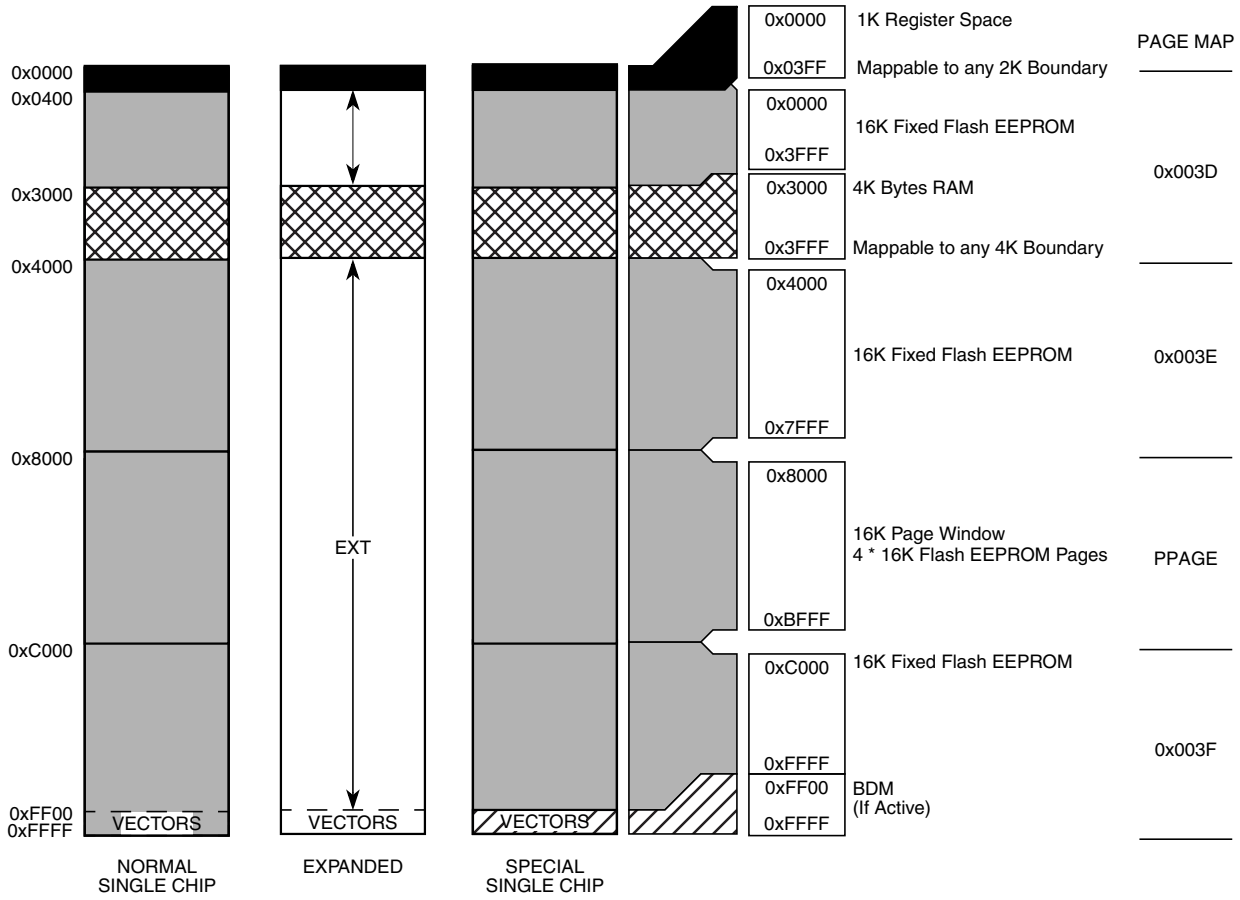


The figure shows a useful map, which is not the map out of reset. After reset the map is:

0x0000–0x03FF: Register space

0x0000–0x0FFF: 4K RAM (only 3K visible 0x0400–0x0FFF)

Flash erase sector size is 1024 Bytes

**Figure 1-4. MC9S12C64 and MC9S12GC64 User Configurable Memory Map**

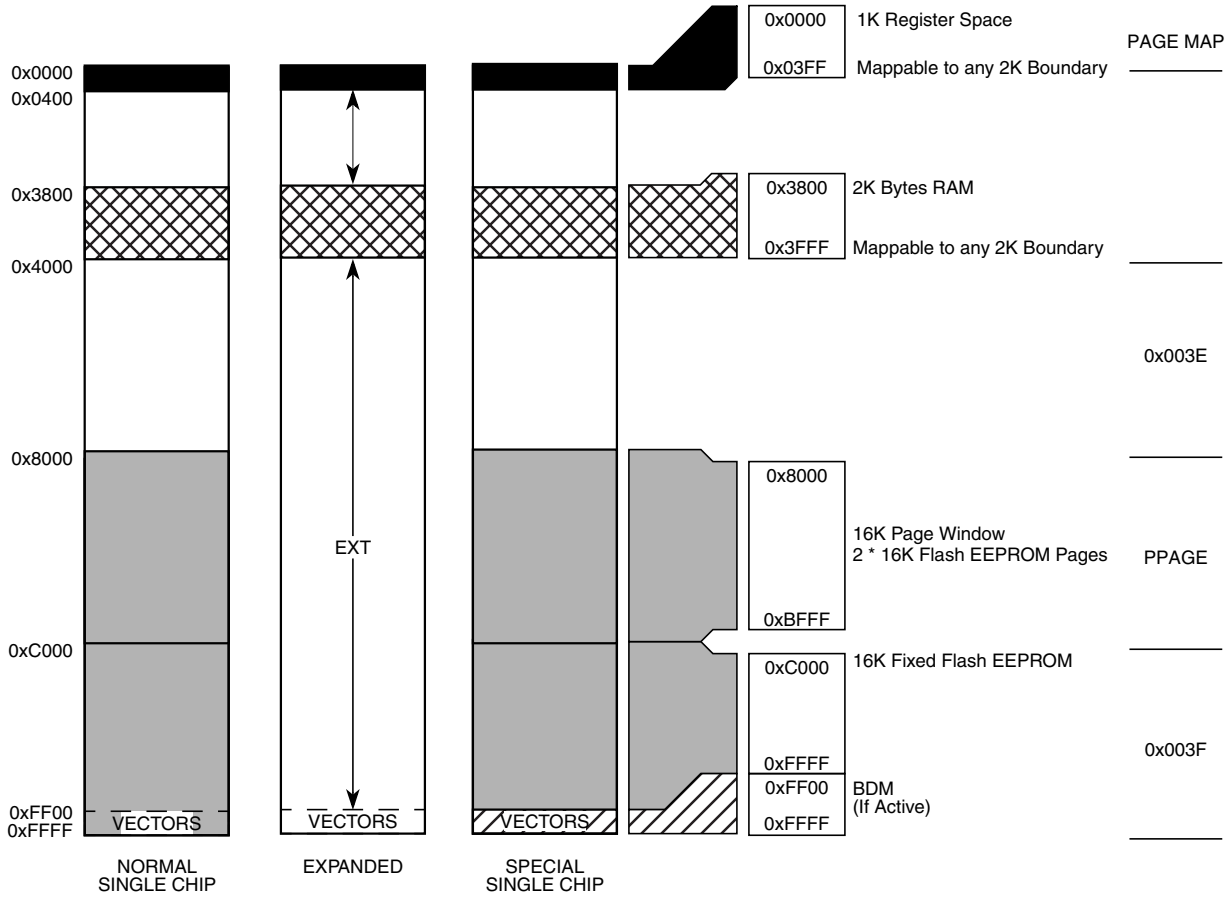


The figure shows a useful map, which is not the map out of reset. After reset the map is:

0x0000–0x03FF: Register space
0x0800–0x0FFF: 2K RAM

Flash erase sector size is 512 bytes

The flash page 0x003E is visible at 0x4000–0x7FFF in the memory map if ROMHM = 0.

In the figure ROMHM = 1 removing page 0x003E from 0x4000–0x7FFF.

**Figure 1-5. MC9S12C32 and MC9S12GC32 User Configurable Memory Map**

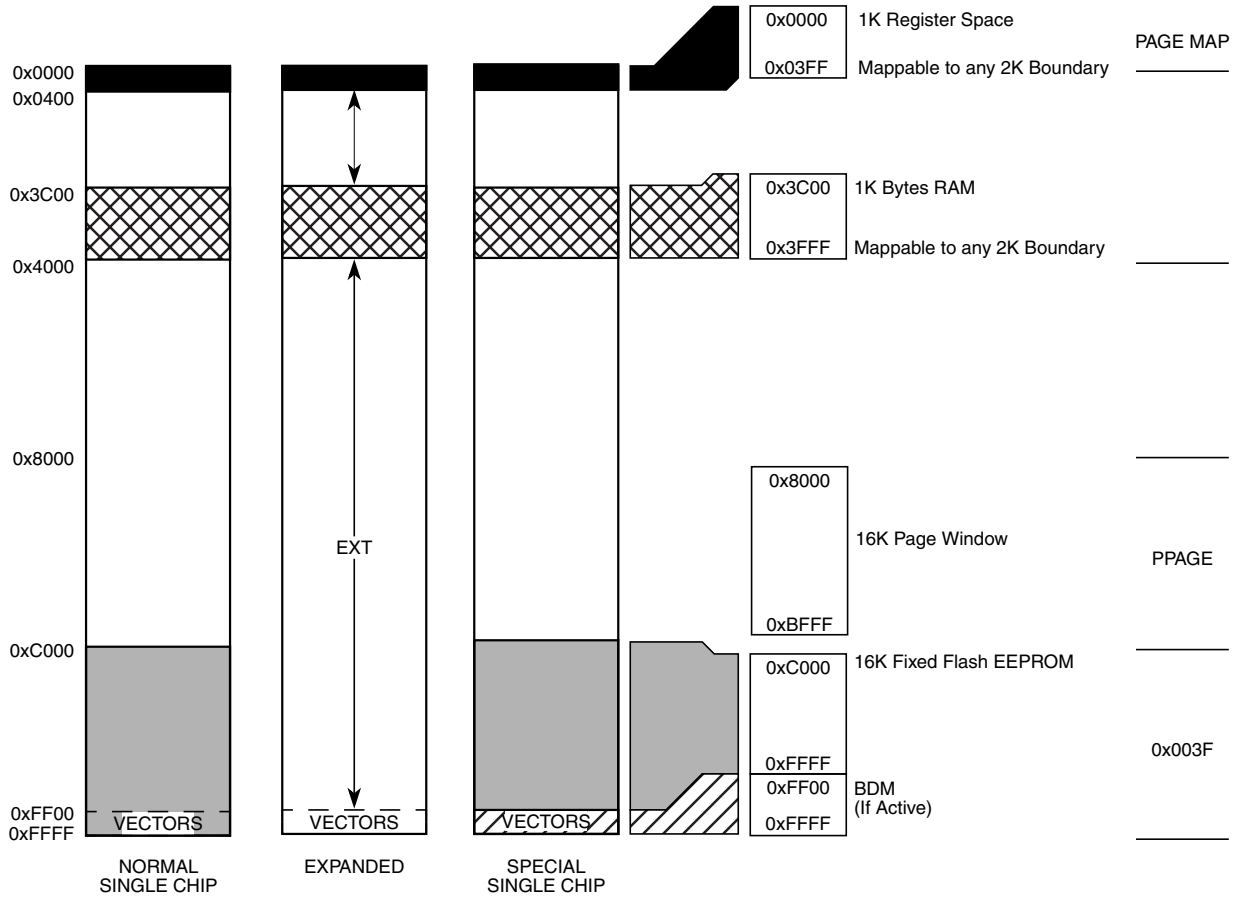


The figure shows a useful map, which is not the map out of reset. After reset the map is:

0x0000–0x03FF: Register Space
0x0C00–0x0FFF: 1K RAM

The 16K flash array page 0x003F is also visible in the PPAGE window when PPAGE register contents are odd.
Flash Erase Sector Size is 512 Bytes

**Figure 1-6. MC9S12GC16 User Configurable Memory Map**

### 1.2.2 Detailed Register Map

The detailed register map of the MC9S12C128 is listed in address order below.

#### 0x0000–0x000F MEBI Map 1 of 3 (HCS12 Multiplexed External Bus Interface)

| Address | Name | | Bit 7 | Bit 6 | Bit 5 | Bit 4 | Bit 3 | Bit 2 | Bit 1 | Bit 0 |
|---|---|---|---|---|---|---|---|---|---|---|
| 0x0000 | PORTA | Read: | Bit 7 | 6 | 5 | 4 | 3 | 2 | 1 | Bit 0 |
| | | Write: | | | | | | | | |
| 0x0001 | PORTB | Read: | Bit 7 | 6 | 5 | 4 | 3 | 2 | 1 | Bit 0 |
| | | Write: | | | | | | | | |
| 0x0002 | DDRA | Read: | Bit 7 | 6 | 5 | 4 | 3 | 2 | 1 | Bit 0 |
| | | Write: | | | | | | | | |
| 0x0003 | DDRB | Read: | Bit 7 | 6 | 5 | 4 | 3 | 2 | 1 | Bit 0 |
| | | Write: | | | | | | | | |
| 0x0004 | Reserved | Read: | 0 | 0 | 0 | 0 | 0 | 0 | 0 | 0 |
| | | Write: | | | | | | | | |
| 0x0005 | Reserved | Read: | 0 | 0 | 0 | 0 | 0 | 0 | 0 | 0 |
| | | Write: | | | | | | | | |
| 0x0006 | Reserved | Read: | 0 | 0 | 0 | 0 | 0 | 0 | 0 | 0 |
| | | Write: | | | | | | | | |
| 0x0007 | Reserved | Read: | 0 | 0 | 0 | 0 | 0 | 0 | 0 | 0 |
| | | Write: | | | | | | | | |
| 0x0008 | PORTE | Read: | Bit 7 | 6 | 5 | 4 | 3 | 2 | Bit 1 | Bit 0 |
| | | Write: | | | | | | | | |
| 0x0009 | DDRE | Read: | Bit 7 | 6 | 5 | 4 | 3 | Bit 2 | 0 | 0 |
| | | Write: | | | | | | | | |
| 0x000A | PEAR | Read: | NOACCE | 0 | PIPOE | NECLK | LSTRE | RDWE | 0 | 0 |
| | | Write: | | | | | | | | |
| 0x000B | MODE | Read: | MODC | MODB | MODA | 0 | IVIS | 0 | EMK | EME |
| | | Write: | | | | | | | | |
| 0x000C | PUCR | Read: | PUPKE | 0 | 0 | PUPEE | 0 | 0 | PUPBE | PUPAE |
| | | Write: | | | | | | | | |
| 0x000D | RDRIV | Read: | RDPK | 0 | 0 | RDPE | 0 | 0 | RDPB | RDPA |
| | | Write: | | | | | | | | |
| 0x000E | EBICTL | Read: | 0 | 0 | 0 | 0 | 0 | 0 | 0 | ESTR |
| | | Write: | | | | | | | | |
| 0x000F | Reserved | Read: | 0 | 0 | 0 | 0 | 0 | 0 | 0 | 0 |
| | | Write: | | | | | | | | |

## 0x0010–0x0014 MMC Map 1 of 4 (HCS12 Module Mapping Control)

| Address | Name | | Bit 7 | Bit 6 | Bit 5 | Bit 4 | Bit 3 | Bit 2 | Bit 1 | Bit 0 |
|---|---|---|---|---|---|---|---|---|---|---|
| 0x0010 | INITRM | Read: | RAM15 | RAM14 | RAM13 | RAM12 | RAM11 | 0 | 0 | RAMHAL |
| | | Write: | | | | | | | | |
| 0x0011 | INITRG | Read: | 0 | REG14 | REG13 | REG12 | REG11 | 0 | 0 | 0 |
| | | Write: | | | | | | | | |
| 0x0012 | INITEE | Read: | EE15 | EE14 | EE13 | EE12 | EE11 | 0 | 0 | EEON |
| | | Write: | | | | | | | | |
| 0x0013 | MISC | Read: | 0 | 0 | 0 | 0 | EXSTR1 | EXSTR0 | ROMHM | ROMON |
| | | Write: | | | | | | | | |
| 0x0014 | Reserved | Read: | 0 | 0 | 0 | 0 | 0 | 0 | 0 | 0 |
| | | Write: | | | | | | | | |

## 0x0015–0x0016 INT Map 1 of 2 (HCS12 Interrupt)

| Address | Name | | Bit 7 | Bit 6 | Bit 5 | Bit 4 | Bit 3 | Bit 2 | Bit 1 | Bit 0 |
|---|---|---|---|---|---|---|---|---|---|---|
| 0x0015 | ITCR | Read: | 0 | 0 | 0 | WRINT | ADR3 | ADR2 | ADR1 | ADR0 |
| | | Write: | | | | | | | | |
| 0x0016 | ITEST | Read: | INTE | INTC | INTA | INT8 | INT6 | INT4 | INT2 | INT0 |
| | | Write: | | | | | | | | |

## 0x0017–0x0017 MMC Map 2 of 4 (HCS12 Module Mapping Control)

| Address | Name | | Bit 7 | Bit 6 | Bit 5 | Bit 4 | Bit 3 | Bit 2 | Bit 1 | Bit 0 |
|---|---|---|---|---|---|---|---|---|---|---|
| 0x0017 | Reserved | Read: | 0 | 0 | 0 | 0 | 0 | 0 | 0 | 0 |
| | | Write: | | | | | | | | |

## 0x0018–0x0018 Miscellaneous Peripherals (Device User Guide)

| Address | Name | | Bit 7 | Bit 6 | Bit 5 | Bit 4 | Bit 3 | Bit 2 | Bit 1 | Bit 0 |
|---|---|---|---|---|---|---|---|---|---|---|
| 0x0018 | Reserved | Read: | 0 | 0 | 0 | 0 | 0 | 0 | 0 | 0 |
| | | Write: | | | | | | | | |

## 0x0019–0x0019 VREG3V3 (Voltage Regulator)

| Address | Name | | Bit 7 | Bit 6 | Bit 5 | Bit 4 | Bit 3 | Bit 2 | Bit 1 | Bit 0 |
|---|---|---|---|---|---|---|---|---|---|---|
| $0019 | VREGCTRL | Read: | 0 | 0 | 0 | 0 | 0 | LVDS | LVIE | LVIF |
| | | Write: | | | | | | | | |

## 0x001A–0x001B Miscellaneous Peripherals (Device User Guide)

| Address | Name | | Bit 7 | Bit 6 | Bit 5 | Bit 4 | Bit 3 | Bit 2 | Bit 1 | Bit 0 |
|---|---|---|---|---|---|---|---|---|---|---|
| 0x001A | PARTIDH | Read: | ID15 | ID14 | ID13 | ID12 | ID11 | ID10 | ID9 | ID8 |
| | | Write: | | | | | | | | |
| 0x001B | PARTIDL | Read: | ID7 | ID6 | ID5 | ID4 | ID3 | ID2 | ID1 | ID0 |
| | | Write: | | | | | | | | |

## 0x001C–0x001D MMC Map 3 of 4 (HCS12 Module Mapping Control, Device User Guide)

| Address | Name | | Bit 7 | Bit 6 | Bit 5 | Bit 4 | Bit 3 | Bit 2 | Bit 1 | Bit 0 |
|---|---|---|---|---|---|---|---|---|---|---|
| 0x001C | MEMSIZ0 | Read: | reg_sw0 | 0 | eep_sw1 | eep_sw0 | 0 | ram_sw2 | ram_sw1 | ram_sw0 |
| | | Write: | | | | | | | | |
| 0x001D | MEMSIZ1 | Read: | rom_sw1 | rom_sw0 | 0 | 0 | 0 | 0 | pag_sw1 | pag_sw0 |
| | | Write: | | | | | | | | |

## 0x001E–0x001E MEBI Map 2 of 3 (HCS12 Multiplexed External Bus Interface)

| Address | Name | | Bit 7 | Bit 6 | Bit 5 | Bit 4 | Bit 3 | Bit 2 | Bit 1 | Bit 0 |
|---|---|---|---|---|---|---|---|---|---|---|
| 0x001E | INTCR | Read: | IRQE | IRQEN | 0 | 0 | 0 | 0 | 0 | 0 |
| | | Write: | | | | | | | | |

## 0x001F–0x001F INT Map 2 of 2 (HCS12 Interrupt)

| Address | Name | | Bit 7 | Bit 6 | Bit 5 | Bit 4 | Bit 3 | Bit 2 | Bit 1 | Bit 0 |
|---|---|---|---|---|---|---|---|---|---|---|
| 0x001F | HPRIO | Read: | PSEL7 | PSEL6 | PSEL5 | PSEL4 | PSEL3 | PSEL2 | PSEL1 | 0 |
| | | Write: | | | | | | | | |

## 0x0020–0x002F DBG (Including BKP) Map 1 of 1 (HCS12 Debug)

| Address | Name | | Bit 7 | Bit 6 | Bit 5 | Bit 4 | Bit 3 | Bit 2 | Bit 1 | Bit 0 |
|---|---|---|---|---|---|---|---|---|---|---|
| 0x0020 | DBGC1 | Read: | DBGEN | ARM | TRGSEL | BEGIN | DBGBRK | 0 | CAPMOD | |
| | | Write: | | | | | | | | |
| 0x0021 | DBGSC | Read: | AF | BF | CF | 0 | TRG | | | |
| | | Write: | | | | | | | | |
| 0x0022 | DBGTBH | Read: | Bit 15 | Bit 14 | Bit 13 | Bit 12 | Bit 11 | Bit 10 | Bit 9 | Bit 8 |
| | | Write: | | | | | | | | |
| 0x0023 | DBGTBL | Read: | Bit 7 | Bit 6 | Bit 5 | Bit 4 | Bit 3 | Bit 2 | Bit 1 | Bit 0 |
| | | Write: | | | | | | | | |
| 0x0024 | DBGCNT | Read: | TBF | 0 | CNT | | | | | |
| | | Write: | | | | | | | | |
| 0x0025 | DBGCCX | Read: | PAGSEL | | EXTCMP | | | | | |
| | | Write: | | | | | | | | |

## 0x0020–0x002F DBG (Including BKP) Map 1 of 1 (HCS12 Debug) (continued)

| Address | Name | | Bit 7 | Bit 6 | Bit 5 | Bit 4 | Bit 3 | Bit 2 | Bit 1 | Bit 0 |
|---|---|---|---|---|---|---|---|---|---|---|
| 0x0026 | DBGCCH | Read:<br>Write: | Bit 15 | 14 | 13 | 12 | 11 | 10 | 9 | Bit 8 |
| 0x0027 | DBGCCL | Read:<br>Write: | Bit 7 | 6 | 5 | 4 | 3 | 2 | 1 | Bit 0 |
| 0x0028 | DBGC2<br>BKPCT0 | Read:<br>Write: | BKABEN | FULL | BDM | TAGAB | BKCEN | TAGC | RWCEN | RWC |
| 0x0029 | DBGC3<br>BKPCT1 | Read:<br>Write: | BKAMBH | BKAMBL | BKBMBH | BKBMBL | RWAEN | RWA | RWBEN | RWB |
| 0x002A | DBGCAX<br>BKP0X | Read:<br>Write: | PAGSEL | | EXTCMP | | | | | |
| 0x002B | DBGCAH<br>BKP0H | Read:<br>Write: | Bit 15 | 14 | 13 | 12 | 11 | 10 | 9 | Bit 8 |
| 0x002C | DBGCAL<br>BKP0L | Read:<br>Write: | Bit 7 | 6 | 5 | 4 | 3 | 2 | 1 | Bit 0 |
| 0x002D | DBGCBX<br>BKP1X | Read:<br>Write: | PAGSEL | | EXTCMP | | | | | |
| 0x002E | DBGCBH<br>BKP1H | Read:<br>Write: | Bit 15 | 14 | 13 | 12 | 11 | 10 | 9 | Bit 8 |
| 0x002F | DBGCBL<br>BKP1L | Read:<br>Write: | Bit 7 | 6 | 5 | 4 | 3 | 2 | 1 | Bit 0 |

## 0x0030–0x0031 MMC Map 4 of 4 (HCS12 Module Mapping Control)

| Address | Name | | Bit 7 | Bit 6 | Bit 5 | Bit 4 | Bit 3 | Bit 2 | Bit 1 | Bit 0 |
|---|---|---|---|---|---|---|---|---|---|---|
| 0x0030 | PPAGE | Read: | 0 | 0 | PIX5 | PIX4 | PIX3 | PIX2 | PIX1 | PIX0 |
| | | Write: | | | | | | | | |
| 0x0031 | Reserved | Read: | 0 | 0 | 0 | 0 | 0 | 0 | 0 | 0 |
| | | Write: | | | | | | | | |

## 0x0032–0x0033 MEBI Map 3 of 3 (HCS12 Multiplexed External Bus Interface)

| Address | Name | | Bit 7 | Bit 6 | Bit 5 | Bit 4 | Bit 3 | Bit 2 | Bit 1 | Bit 0 |
|---|---|---|---|---|---|---|---|---|---|---|
| 0x0032 | PORTK[(1)] | Read:<br>Write: | Bit 7 | 6 | 5 | 4 | 3 | 2 | 1 | Bit 0 |
| 0x0033 | DDRK[1] | Read:<br>Write: | Bit 7 | 6 | 5 | 4 | 3 | 2 | 1 | Bit 0 |
| Address | Name | | Bit 7 | Bit 6 | Bit 5 | Bit 4 | Bit 3 | Bit 2 | Bit 1 | Bit 0 |
| $0032 | Reserved | Read: | 0 | 0 | 0 | 0 | 0 | 0 | 0 | 0 |
| | | Write: | | | | | | | | |
| $0033 | Reserved | Read: | 0 | 0 | 0 | 0 | 0 | 0 | 0 | 0 |
| | | Write: | | | | | | | | |

1. Only applicable in special emulation-only bond outs, for emulation of extended memory map.

## 0x0034–0x003F CRG (Clock and Reset Generator)

| Address | Name | | Bit 7 | Bit 6 | Bit 5 | Bit 4 | Bit 3 | Bit 2 | Bit 1 | Bit 0 |
|---|---|---|---|---|---|---|---|---|---|---|
| 0x0034 | SYNR | Read: | 0 | 0 | SYN5 | SYN4 | SYN3 | SYN2 | SYN1 | SYN0 |
| | | Write: | | | | | | | | |
| 0x0035 | REFDV | Read: | 0 | 0 | 0 | 0 | REFDV3 | REFDV2 | REFDV1 | REFDV0 |
| | | Write: | | | | | | | | |
| 0x0036 | CTFLG TEST ONLY | Read: | TOUT7 | TOUT6 | TOUT5 | TOUT4 | TOUT3 | TOUT2 | TOUT1 | TOUT0 |
| | | Write: | | | | | | | | |
| 0x0037 | CRGFLG | Read: | RTIF | PORF | LVRF | LOCKIF | LOCK | TRACK | SCMIF | SCM |
| | | Write: | | | | | | | | |
| 0x0038 | CRGINT | Read: | RTIE | 0 | 0 | LOCKIE | 0 | 0 | SCMIE | 0 |
| | | Write: | | | | | | | | |
| 0x0039 | CLKSEL | Read: | PLLSEL | PSTP | SYSWAI | ROAWAI | PLLWAI | CWAI | RTIWAI | COPWAI |
| | | Write: | | | | | | | | |
| 0x003A | PLLCTL | Read: | CME | PLLON | AUTO | ACQ | 0 | PRE | PCE | SCME |
| | | Write: | | | | | | | | |
| 0x003B | RTICTL | Read: | 0 | RTR6 | RTR5 | RTR4 | RTR3 | RTR2 | RTR1 | RTR0 |
| | | Write: | | | | | | | | |
| 0x003C | COPCTL | Read: | WCOP | RSBCK | 0 | 0 | 0 | CR2 | CR1 | CR0 |
| | | Write: | | | | | | | | |
| 0x003D | FORBYP TEST ONLY | Read: | RTIBYP | COPBYP | 0 | PLLBYP | 0 | 0 | FCM | 0 |
| | | Write: | | | | | | | | |
| 0x003E | CTCTL TEST ONLY | Read: | TCTL7 | TCTL6 | TCTL5 | TCTL4 | TCLT3 | TCTL2 | TCTL1 | TCTL0 |
| | | Write: | | | | | | | | |
| 0x003F | ARMCOP | Read: | 0 | 0 | 0 | 0 | 0 | 0 | 0 | 0 |
| | | Write: | Bit 7 | 6 | 5 | 4 | 3 | 2 | 1 | Bit 0 |

## 0x0040-0x006F TIM

| Address | Name | | Bit 7 | Bit 6 | Bit 5 | Bit 4 | Bit 3 | Bit 2 | Bit 1 | Bit 0 |
|---|---|---|---|---|---|---|---|---|---|---|
| 0x0040 | TIOS | Read: | IOS7 | IOS6 | IOS5 | IOS4 | IOS3 | IOS2 | IOS1 | IOS0 |
| | | Write: | | | | | | | | |
| 0x0041 | CFORC | Read: | 0 | 0 | 0 | 0 | 0 | 0 | 0 | 0 |
| | | Write: | FOC7 | FOC6 | FOC5 | FOC4 | FOC3 | FOC2 | FOC1 | FOC0 |
| 0x0042 | OC7M | Read: | OC7M7 | OC7M6 | OC7M5 | OC7M4 | OC7M3 | OC7M2 | OC7M1 | OC7M0 |
| | | Write: | | | | | | | | |
| 0x0043 | OC7D | Read: | OC7D7 | OC7D6 | OC7D5 | OC7D4 | OC7D3 | OC7D2 | OC7D1 | OC7D0 |
| | | Write: | | | | | | | | |
| 0x0044 | TCNT (hi) | Read: | Bit 15 | 14 | 13 | 12 | 11 | 10 | 9 | Bit 8 |
| | | Write: | | | | | | | | |
| 0x0045 | TCNT (lo) | Read: | Bit 7 | 6 | 5 | 4 | 3 | 2 | 1 | Bit 0 |
| | | Write: | | | | | | | | |
| 0x0046 | TSCR1 | Read: | TEN | TSWAI | TSFRZ | TFFCA | 0 | 0 | 0 | 0 |
| | | Write: | | | | | | | | |
| 0x0047 | TTOV | Read: | TOV7 | TOV6 | TOV5 | TOV4 | TOV3 | TOV2 | TOV1 | TOV0 |
| | | Write: | | | | | | | | |

| Address | Name | | Bit 7 | Bit 6 | Bit 5 | Bit 4 | Bit 3 | Bit 2 | Bit 1 | Bit 0 |
|---|---|---|---|---|---|---|---|---|---|---|
| 0x0048 | TCTL1 | Read:<br>Write: | OM7 | OL7 | OM6 | OL6 | OM5 | OL5 | OM4 | OL4 |
| 0x0049 | TCTL2 | Read:<br>Write: | OM3 | OL3 | OM2 | OL2 | OM1 | OL1 | OM0 | OL0 |
| 0x004A | TCTL3 | Read:<br>Write: | EDG7B | EDG7A | EDG6B | EDG6A | EDG5B | EDG5A | EDG4B | EDG4A |
| 0x004B | TCTL4 | Read:<br>Write: | EDG3B | EDG3A | EDG2B | EDG2A | EDG1B | EDG1A | EDG0B | EDG0A |
| 0x004C | TIE | Read:<br>Write: | C7I | C6I | C5I | C4I | C3I | C2I | C1I | C0I |
| 0x004D | TSCR2 | Read:<br>Write: | TOI | 0 | 0 | 0 | TCRE | PR2 | PR1 | PR0 |
| 0x004E | TFLG1 | Read:<br>Write: | C7F | C6F | C5F | C4F | C3F | C2F | C1F | C0F |
| 0x004F | TFLG2 | Read:<br>Write: | TOF | 0 | 0 | 0 | 0 | 0 | 0 | 0 |
| 0x0050 | TC0 (hi) | Read:<br>Write: | Bit 15 | 14 | 13 | 12 | 11 | 10 | 9 | Bit 8 |
| 0x0051 | TC0 (lo) | Read:<br>Write: | Bit 7 | 6 | 5 | 4 | 3 | 2 | 1 | Bit 0 |
| 0x0052 | TC1 (hi) | Read:<br>Write: | Bit 15 | 14 | 13 | 12 | 11 | 10 | 9 | Bit 8 |
| 0x0053 | TC1 (lo) | Read:<br>Write: | Bit 7 | 6 | 5 | 4 | 3 | 2 | 1 | Bit 0 |
| 0x0054 | TC2 (hi) | Read:<br>Write: | Bit 15 | 14 | 13 | 12 | 11 | 10 | 9 | Bit 8 |
| 0x0055 | TC2 (lo) | Read:<br>Write: | Bit 7 | 6 | 5 | 4 | 3 | 2 | 1 | Bit 0 |
| 0x0056 | TC3 (hi) | Read:<br>Write: | Bit 15 | 14 | 13 | 12 | 11 | 10 | 9 | Bit 8 |
| 0x0057 | TC3 (lo) | Read:<br>Write: | Bit 7 | 6 | 5 | 4 | 3 | 2 | 1 | Bit 0 |
| 0x0058 | TC4 (hi) | Read:<br>Write: | Bit 15 | 14 | 13 | 12 | 11 | 10 | 9 | Bit 8 |
| 0x0059 | TC4 (lo) | Read:<br>Write: | Bit 7 | 6 | 5 | 4 | 3 | 2 | 1 | Bit 0 |
| 0x005A | TC5 (hi) | Read:<br>Write: | Bit 15 | 14 | 13 | 12 | 11 | 10 | 9 | Bit 8 |
| 0x005B | TC5 (lo) | Read:<br>Write: | Bit 7 | 6 | 5 | 4 | 3 | 2 | 1 | Bit 0 |
| 0x005C | TC6 (hi) | Read:<br>Write: | Bit 15 | 14 | 13 | 12 | 11 | 10 | 9 | Bit 8 |
| 0x005D | TC6 (lo) | Read:<br>Write: | Bit 7 | 6 | 5 | 4 | 3 | 2 | 1 | Bit 0 |
| 0x005E | TC7 (hi) | Read:<br>Write: | Bit 15 | 14 | 13 | 12 | 11 | 10 | 9 | Bit 8 |

| Address | Name | | Bit 7 | Bit 6 | Bit 5 | Bit 4 | Bit 3 | Bit 2 | Bit 1 | Bit 0 |
|---|---|---|---|---|---|---|---|---|---|---|
| 0x005F | TC7 (lo) | Read:<br>Write: | Bit 7 | 6 | 5 | 4 | 3 | 2 | 1 | Bit 0 |
| 0x0060 | PACTL | Read: | 0 | PAEN | PAMOD | PEDGE | CLK1 | CLK0 | PAOVI | PAI |
| | | Write: | | | | | | | | |
| 0x0061 | PAFLG | Read: | 0 | 0 | 0 | 0 | 0 | 0 | PAOVF | PAIF |
| | | Write: | | | | | | | | |
| 0x0062 | PACNT (hi) | Read:<br>Write: | Bit 15 | 14 | 13 | 12 | 11 | 10 | 9 | Bit 8 |
| 0x0063 | PACNT (lo) | Read:<br>Write: | Bit 7 | 6 | 5 | 4 | 3 | 2 | 1 | Bit 0 |
| 0x0064 | Reserved | Read: | 0 | 0 | 0 | 0 | 0 | 0 | 0 | 0 |
| | | Write: | | | | | | | | |
| 0x0065 | Reserved | Read: | 0 | 0 | 0 | 0 | 0 | 0 | 0 | 0 |
| | | Write: | | | | | | | | |
| 0x0066 | Reserved | Read: | 0 | 0 | 0 | 0 | 0 | 0 | 0 | 0 |
| | | Write: | | | | | | | | |
| 0x0067 | Reserved | Read: | 0 | 0 | 0 | 0 | 0 | 0 | 0 | 0 |
| | | Write: | | | | | | | | |
| 0x0068 | Reserved | Read: | 0 | 0 | 0 | 0 | 0 | 0 | 0 | 0 |
| | | Write: | | | | | | | | |
| 0x0069 | Reserved | Read: | 0 | 0 | 0 | 0 | 0 | 0 | 0 | 0 |
| | | Write: | | | | | | | | |
| 0x006A | Reserved | Read: | 0 | 0 | 0 | 0 | 0 | 0 | 0 | 0 |
| | | Write: | | | | | | | | |
| 0x006B | Reserved | Read: | 0 | 0 | 0 | 0 | 0 | 0 | 0 | 0 |
| | | Write: | | | | | | | | |
| 0x006C | Reserved | Read: | 0 | 0 | 0 | 0 | 0 | 0 | 0 | 0 |
| | | Write: | | | | | | | | |
| 0x006D | Reserved | Read: | 0 | 0 | 0 | 0 | 0 | 0 | 0 | 0 |
| | | Write: | | | | | | | | |
| 0x006E | Reserved | Read: | 0 | 0 | 0 | 0 | 0 | 0 | 0 | 0 |
| | | Write: | | | | | | | | |
| 0x006F | Reserved | Read: | 0 | 0 | 0 | 0 | 0 | 0 | 0 | 0 |
| | | Write: | | | | | | | | |

## 0x0070–0x007F Reserved

| Address | Name | | Bit 7 | Bit 6 | Bit 5 | Bit 4 | Bit 3 | Bit 2 | Bit 1 | Bit 0 |
|---|---|---|---|---|---|---|---|---|---|---|
| 0x0070–<br>0x007F | Reserved | Read: | 0 | 0 | 0 | 0 | 0 | 0 | 0 | 0 |
| | | Write: | | | | | | | | |

## 0x0080–0x009F ATD (Analog-to-Digital Converter 10 Bit 8 Channel)

| Address | Name | | Bit 7 | Bit 6 | Bit 5 | Bit 4 | Bit 3 | Bit 2 | Bit 1 | Bit 0 |
|---|---|---|---|---|---|---|---|---|---|---|
| 0x0080 | ATDCTL0 | Read: | 0 | 0 | 0 | 0 | 0 | 0 | 0 | 0 |
| | | Write: | | | | | | | | |
| 0x0081 | ATDCTL1 | Read: | 0 | 0 | 0 | 0 | 0 | 0 | 0 | 0 |
| | | Write: | | | | | | | | |
| 0x0082 | ATDCTL2 | Read: | ADPU | AFFC | AWAI | ETRIGLE | ETRIGP | ETRIG | ASCIE | ASCIF |
| | | Write: | | | | | | | | |
| 0x0083 | ATDCTL3 | Read: | 0 | S8C | S4C | S2C | S1C | FIFO | FRZ1 | FRZ0 |
| | | Write: | | | | | | | | |
| 0x0084 | ATDCTL4 | Read: | SRES8 | SMP1 | SMP0 | PRS4 | PRS3 | PRS2 | PRS1 | PRS0 |
| | | Write: | | | | | | | | |
| 0x0085 | ATDCTL5 | Read: | DJM | DSGN | SCAN | MULT | 0 | CC | CB | CA |
| | | Write: | | | | | | | | |
| 0x0086 | ATDSTAT0 | Read: | SCF | 0 | ETORF | FIFOR | 0 | CC2 | CC1 | CC0 |
| | | Write: | | | | | | | | |
| 0x0087 | Reserved | Read: | 0 | 0 | 0 | 0 | 0 | 0 | 0 | 0 |
| | | Write: | | | | | | | | |
| 0x0088 | ATDTEST0 | Read: | 0 | 0 | 0 | 0 | 0 | 0 | 0 | 0 |
| | | Write: | | | | | | | | |
| 0x0089 | ATDTEST1 | Read: | 0 | 0 | 0 | 0 | 0 | 0 | 0 | SC |
| | | Write: | | | | | | | | |
| 0x008A | Reserved | Read: | 0 | 0 | 0 | 0 | 0 | 0 | 0 | 0 |
| | | Write: | | | | | | | | |
| 0x008B | ATDSTAT1 | Read: | CCF7 | CCF6 | CCF5 | CCF4 | CCF3 | CCF2 | CCF1 | CCF0 |
| | | Write: | | | | | | | | |
| 0x008C | Reserved | Read: | 0 | 0 | 0 | 0 | 0 | 0 | 0 | 0 |
| | | Write: | | | | | | | | |
| 0x008D | ATDDIEN | Read: | Bit 7 | 6 | 5 | 4 | 3 | 2 | 1 | Bit 0 |
| | | Write: | | | | | | | | |
| 0x008E | Reserved | Read: | 0 | 0 | 0 | 0 | 0 | 0 | 0 | 0 |
| | | Write: | | | | | | | | |
| 0x008F | PORTAD | Read: | Bit7 | 6 | 5 | 4 | 3 | 2 | 1 | BIT 0 |
| | | Write: | | | | | | | | |
| 0x0090 | ATDDR0H | Read: | Bit15 | 14 | 13 | 12 | 11 | 10 | 9 | Bit8 |
| | | Write: | | | | | | | | |
| 0x0091 | ATDDR0L | Read: | Bit7 | Bit6 | 0 | 0 | 0 | 0 | 0 | 0 |
| | | Write: | | | | | | | | |
| 0x0092 | ATDDR1H | Read: | Bit15 | 14 | 13 | 12 | 11 | 10 | 9 | Bit8 |
| | | Write: | | | | | | | | |
| 0x0093 | ATDDR1L | Read: | Bit7 | Bit6 | 0 | 0 | 0 | 0 | 0 | 0 |
| | | Write: | | | | | | | | |
| 0x0094 | ATDDR2H | Read: | Bit15 | 14 | 13 | 12 | 11 | 10 | 9 | Bit8 |
| | | Write: | | | | | | | | |
| 0x0095 | ATDDR2L | Read: | Bit7 | Bit6 | 0 | 0 | 0 | 0 | 0 | 0 |
| | | Write: | | | | | | | | |

## 0x0080–0x009F ATD (Analog-to-Digital Converter 10 Bit 8 Channel) (continued)

| Address | Name | | Bit 7 | Bit 6 | Bit 5 | Bit 4 | Bit 3 | Bit 2 | Bit 1 | Bit 0 |
|---|---|---|---|---|---|---|---|---|---|---|
| 0x0096 | ATDDR3H | Read: | Bit15 | 14 | 13 | 12 | 11 | 10 | 9 | Bit8 |
| | | Write: | | | | | | | | |
| 0x0097 | ATDDR3L | Read: | Bit7 | Bit6 | 0 | 0 | 0 | 0 | 0 | 0 |
| | | Write: | | | | | | | | |
| 0x0098 | ATDDR4H | Read: | Bit15 | 14 | 13 | 12 | 11 | 10 | 9 | Bit8 |
| | | Write: | | | | | | | | |
| 0x0099 | ATDDR4L | Read: | Bit7 | Bit6 | 0 | 0 | 0 | 0 | 0 | 0 |
| | | Write: | | | | | | | | |
| 0x009A | ATDDR5H | Read: | Bit15 | 14 | 13 | 12 | 11 | 10 | 9 | Bit8 |
| | | Write: | | | | | | | | |
| 0x009B | ATDDR5L | Read: | Bit7 | Bit6 | 0 | 0 | 0 | 0 | 0 | 0 |
| | | Write: | | | | | | | | |
| 0x009C | ATDDR6H | Read: | Bit15 | 14 | 13 | 12 | 11 | 10 | 9 | Bit8 |
| | | Write: | | | | | | | | |
| 0x009D | ATDDR6L | Read: | Bit7 | Bit6 | 0 | 0 | 0 | 0 | 0 | 0 |
| | | Write: | | | | | | | | |
| 0x009E | ATDDR7H | Read: | Bit15 | 14 | 13 | 12 | 11 | 10 | 9 | Bit8 |
| | | Write: | | | | | | | | |
| 0x009F | ATDDR7L | Read: | Bit7 | Bit6 | 0 | 0 | 0 | 0 | 0 | 0 |
| | | Write: | | | | | | | | |

## 0x00A0–0x00C7 Reserved

| Address | Name | | Bit 7 | Bit 6 | Bit 5 | Bit 4 | Bit 3 | Bit 2 | Bit 1 | Bit 0 |
|---|---|---|---|---|---|---|---|---|---|---|
| 0x00A0–0x00C7 | Reserved | Read: | 0 | 0 | 0 | 0 | 0 | 0 | 0 | 0 |
| | | Write: | | | | | | | | |

## 0x00C8–0x00CF SCI (Asynchronous Serial Interface)

| Address | Name | | Bit 7 | Bit 6 | Bit 5 | Bit 4 | Bit 3 | Bit 2 | Bit 1 | Bit 0 |
|---|---|---|---|---|---|---|---|---|---|---|
| 0x00C8 | SCIBDH | Read: | 0 | 0 | 0 | SBR12 | SBR11 | SBR10 | SBR9 | SBR8 |
| | | Write: | | | | | | | | |
| 0x00C9 | SCIBDL | Read: Write: | SBR7 | SBR6 | SBR5 | SBR4 | SBR3 | SBR2 | SBR1 | SBR0 |
| 0x00CA | SCICR1 | Read: Write: | LOOPS | SCISWAI | RSRC | M | WAKE | ILT | PE | PT |
| 0x00CB | SCICR2 | Read: Write: | TIE | TCIE | RIE | ILIE | TE | RE | RWU | SBK |
| 0x00CC | SCISR1 | Read: | TDRE | TC | RDRF | IDLE | OR | NF | FE | PF |
| | | Write: | | | | | | | | |

## 0x00C8–0x00CF SCI (Asynchronous Serial Interface) (continued)

| Address | Name | | Bit 7 | Bit 6 | Bit 5 | Bit 4 | Bit 3 | Bit 2 | Bit 1 | Bit 0 |
|---|---|---|---|---|---|---|---|---|---|---|
| 0x00CD | SCISR2 | Read: | 0 | 0 | 0 | 0 | 0 | BRK13 | TXDIR | RAF |
| | | Write: | | | | | | | | |
| 0x00CE | SCIDRH | Read: | R8 | T8 | 0 | 0 | 0 | 0 | 0 | 0 |
| | | Write: | | | | | | | | |
| 0x00CF | SCIDRL | Read: | R7 | R6 | R5 | R4 | R3 | R2 | R1 | R0 |
| | | Write: | T7 | T6 | T5 | T4 | T3 | T2 | T1 | T0 |

## 0x00D0–0x00D7 Reserved

| Address | Name | | Bit 7 | Bit 6 | Bit 5 | Bit 4 | Bit 3 | Bit 2 | Bit 1 | Bit 0 |
|---|---|---|---|---|---|---|---|---|---|---|
| 0x00D0–0x00D7 | Reserved | Read: | 0 | 0 | 0 | 0 | 0 | 0 | 0 | 0 |
| | | Write: | | | | | | | | |

## 0x00D8–0x00DF SPI (Serial Peripheral Interface)

| Address | Name | | Bit 7 | Bit 6 | Bit 5 | Bit 4 | Bit 3 | Bit 2 | Bit 1 | Bit 0 |
|---|---|---|---|---|---|---|---|---|---|---|
| 0x00D8 | SPICR1 | Read: Write: | SPIE | SPE | SPTIE | MSTR | CPOL | CPHA | SSOE | LSBFE |
| 0x00D9 | SPICR2 | Read: | 0 | 0 | 0 | MODFEN | BIDIROE | 0 | SPISWAI | SPC0 |
| | | Write: | | | | | | | | |
| 0x00DA | SPIBR | Read: | 0 | SPPR2 | SPPR1 | SPPR0 | 0 | SPR2 | SPR1 | SPR0 |
| | | Write: | | | | | | | | |
| 0x00DB | SPISR | Read: | SPIF | 0 | SPTEF | MODF | 0 | 0 | 0 | 0 |
| | | Write: | | | | | | | | |
| 0x00DC | Reserved | Read: | 0 | 0 | 0 | 0 | 0 | 0 | 0 | 0 |
| | | Write: | | | | | | | | |
| 0x00DD | SPIDR | Read: Write: | Bit7 | 6 | 5 | 4 | 3 | 2 | 1 | Bit0 |
| 0x00DE | Reserved | Read: | 0 | 0 | 0 | 0 | 0 | 0 | 0 | 0 |
| | | Write: | | | | | | | | |
| 0x00DF | Reserved | Read: | 0 | 0 | 0 | 0 | 0 | 0 | 0 | 0 |
| | | Write: | | | | | | | | |

## 0x00E0–0x00FF PWM (Pulse Width Modulator)

| Address | Name | | Bit 7 | Bit 6 | Bit 5 | Bit 4 | Bit 3 | Bit 2 | Bit 1 | Bit 0 |
|---|---|---|---|---|---|---|---|---|---|---|
| $00E0 | PWME | Read: | 0 | 0 | PWME5 | PWME4 | PWME3 | PWME2 | PWME1 | PWME0 |
| | | Write: | | | | | | | | |
| $00E1 | PWMPOL | Read: | 0 | 0 | PPOL5 | PPOL4 | PPOL3 | PPOL2 | PPOL1 | PPOL0 |
| | | Write: | | | | | | | | |
| $00E2 | PWMCLK | Read: | 0 | 0 | PCLK5 | PCLK4 | PCLK3 | PCLK2 | PCLK1 | PCLK0 |
| | | Write: | | | | | | | | |
| $00E3 | PWMPRCLK | Read: | 0 | PCKB2 | PCKB1 | PCKB0 | 0 | PCKA2 | PCKA1 | PCKA0 |
| | | Write: | | | | | | | | |
| $00E4 | PWMCAE | Read: | 0 | 0 | CAE5 | CAE4 | CAE3 | CAE2 | CAE1 | CAE0 |
| | | Write: | | | | | | | | |
| $00E5 | PWMCTL | Read: | 0 | CON45 | CON23 | CON01 | PSWAI | PFRZ | 0 | 0 |
| | | Write: | | | | | | | | |
| $00E6 | PWMTST Test Only | Read: | 0 | 0 | 0 | 0 | 0 | 0 | 0 | 0 |
| | | Write: | | | | | | | | |
| $00E7 | PWMPRSC | Read: | 0 | 0 | 0 | 0 | 0 | 0 | 0 | 0 |
| | | Write: | | | | | | | | |
| $00E8 | PWMSCLA | Read: Write: | Bit 7 | 6 | 5 | 4 | 3 | 2 | 1 | Bit 0 |
| $00E9 | PWMSCLB | Read: Write: | Bit 7 | 6 | 5 | 4 | 3 | 2 | 1 | Bit 0 |
| $00EA | PWMSCNTA | Read: | 0 | 0 | 0 | 0 | 0 | 0 | 0 | 0 |
| | | Write: | | | | | | | | |
| $00EB | PWMSCNTB | Read: | 0 | 0 | 0 | 0 | 0 | 0 | 0 | 0 |
| | | Write: | | | | | | | | |
| $00EC | PWMCNT0 | Read: | Bit 7 | 6 | 5 | 4 | 3 | 2 | 1 | Bit 0 |
| | | Write: | 0 | 0 | 0 | 0 | 0 | 0 | 0 | 0 |
| $00ED | PWMCNT1 | Read: | Bit 7 | 6 | 5 | 4 | 3 | 2 | 1 | Bit 0 |
| | | Write: | 0 | 0 | 0 | 0 | 0 | 0 | 0 | 0 |
| $00EE | PWMCNT2 | Read: | Bit 7 | 6 | 5 | 4 | 3 | 2 | 1 | Bit 0 |
| | | Write: | 0 | 0 | 0 | 0 | 0 | 0 | 0 | 0 |
| $00EF | PWMCNT3 | Read: | Bit 7 | 6 | 5 | 4 | 3 | 2 | 1 | Bit 0 |
| | | Write: | 0 | 0 | 0 | 0 | 0 | 0 | 0 | 0 |
| $00F0 | PWMCNT4 | Read: | Bit 7 | 6 | 5 | 4 | 3 | 2 | 1 | Bit 0 |
| | | Write: | 0 | 0 | 0 | 0 | 0 | 0 | 0 | 0 |
| $00F1 | PWMCNT5 | Read: | Bit 7 | 6 | 5 | 4 | 3 | 2 | 1 | Bit 0 |
| | | Write: | 0 | 0 | 0 | 0 | 0 | 0 | 0 | 0 |
| $00F2 | PWMPER0 | Read: Write: | Bit 7 | 6 | 5 | 4 | 3 | 2 | 1 | Bit 0 |
| $00F3 | PWMPER1 | Read: Write: | Bit 7 | 6 | 5 | 4 | 3 | 2 | 1 | Bit 0 |
| $00F4 | PWMPER2 | Read: Write: | Bit 7 | 6 | 5 | 4 | 3 | 2 | 1 | Bit 0 |
| $00F5 | PWMPER3 | Read: Write: | Bit 7 | 6 | 5 | 4 | 3 | 2 | 1 | Bit 0 |

## 0x00E0–0x00FF PWM (Pulse Width Modulator) (continued)

| Address | Name | | Bit 7 | Bit 6 | Bit 5 | Bit 4 | Bit 3 | Bit 2 | Bit 1 | Bit 0 |
|---|---|---|---|---|---|---|---|---|---|---|
| $00F6 | PWMPER4 | Read:<br>Write: | Bit 7 | 6 | 5 | 4 | 3 | 2 | 1 | Bit 0 |
| $00F7 | PWMPER5 | Read:<br>Write: | Bit 7 | 6 | 5 | 4 | 3 | 2 | 1 | Bit 0 |
| $00F8 | PWMDTY0 | Read:<br>Write: | Bit 7 | 6 | 5 | 4 | 3 | 2 | 1 | Bit 0 |
| $00F9 | PWMDTY1 | Read:<br>Write: | Bit 7 | 6 | 5 | 4 | 3 | 2 | 1 | Bit 0 |
| $00FA | PWMDTY2 | Read:<br>Write: | Bit 7 | 6 | 5 | 4 | 3 | 2 | 1 | Bit 0 |
| $00FB | PWMDTY3 | Read:<br>Write: | Bit 7 | 6 | 5 | 4 | 3 | 2 | 1 | Bit 0 |
| $00FC | PWMDTY4 | Read:<br>Write: | Bit 7 | 6 | 5 | 4 | 3 | 2 | 1 | Bit 0 |
| $00FD | PWMDTY5 | Read:<br>Write: | Bit 7 | 6 | 5 | 4 | 3 | 2 | 1 | Bit 0 |
| $00FE | Reserved | Read:<br>Write: | PWMIF | PWMIE | 0<br>PWMRSTRT | PWMLVL | 0 | PWM5IN | PWM5INL | PWM5ENA |
| $00FF | Reserved | Read:<br>Write: | 0 | 0 | 0 | 0 | 0 | 0 | 0 | 0 |

## 0x0110–0x013F Reserved

| Address | Name | | Bit 7 | Bit 6 | Bit 5 | Bit 4 | Bit 3 | Bit 2 | Bit 1 | Bit 0 |
|---|---|---|---|---|---|---|---|---|---|---|
| 0x0110–<br>0x003F | Reserved | Read:<br>Write: | 0 | 0 | 0 | 0 | 0 | 0 | 0 | 0 |

## 0x0140–0x017F CAN (Scalable Controller Area Network — MSCAN)[1]

| Address | Name | | Bit 7 | Bit 6 | Bit 5 | Bit 4 | Bit 3 | Bit 2 | Bit 1 | Bit 0 |
|---|---|---|---|---|---|---|---|---|---|---|
| 0x0140 | CANCTL0 | Read:<br>Write: | RXFRM | RXACT | CSWAI | SYNCH | TIME | WUPE | SLPRQ | INITRQ |
| 0x0141 | CANCTL1 | Read:<br>Write: | CANE | CLKSRC | LOOPB | LISTEN | 0 | WUPM | SLPAK | INITAK |
| 0x0142 | CANBTR0 | Read:<br>Write: | SJW1 | SJW0 | BRP5 | BRP4 | BRP3 | BRP2 | BRP1 | BRP0 |
| 0x0143 | CANBTR1 | Read:<br>Write: | SAMP | TSEG22 | TSEG21 | TSEG20 | TSEG13 | TSEG12 | TSEG11 | TSEG10 |
| 0x0144 | CANRFLG | Read:<br>Write: | WUPIF | CSCIF | RSTAT1 | RSTAT0 | TSTAT1 | TSTAT0 | OVRIF | RXF |
| 0x0145 | CANRIER | Read:<br>Write: | WUPIE | CSCIE | RSTATE1 | RSTATE0 | TSTATE1 | TSTATE0 | OVRIE | RXFIE |

## 0x0140–0x017F CAN (Scalable Controller Area Network — MSCAN)[1] (continued)

| Address | Name | | Bit 7 | Bit 6 | Bit 5 | Bit 4 | Bit 3 | Bit 2 | Bit 1 | Bit 0 |
|---|---|---|---|---|---|---|---|---|---|---|
| 0x0146 | CANTFLG | Read: | 0 | 0 | 0 | 0 | 0 | TXE2 | TXE1 | TXE0 |
| | | Write: | | | | | | | | |
| 0x0147 | CANTIER | Read: | 0 | 0 | 0 | 0 | 0 | TXEIE2 | TXEIE1 | TXEIE0 |
| | | Write: | | | | | | | | |
| 0x0148 | CANTARQ | Read: | 0 | 0 | 0 | 0 | 0 | ABTRQ2 | ABTRQ1 | ABTRQ0 |
| | | Write: | | | | | | | | |
| 0x0149 | CANTAAK | Read: | 0 | 0 | 0 | 0 | 0 | ABTAK2 | ABTAK1 | ABTAK0 |
| | | Write: | | | | | | | | |
| 0x014A | CANTBSEL | Read: | 0 | 0 | 0 | 0 | 0 | TX2 | TX1 | TX0 |
| | | Write: | | | | | | | | |
| 0x014B | CANIDAC | Read: | 0 | 0 | IDAM1 | IDAM0 | 0 | IDHIT2 | IDHIT1 | IDHIT0 |
| | | Write: | | | | | | | | |
| 0x014C | Reserved | Read: | 0 | 0 | 0 | 0 | 0 | 0 | 0 | 0 |
| | | Write: | | | | | | | | |
| 0x014D | Reserved | Read: | 0 | 0 | 0 | 0 | 0 | 0 | 0 | 0 |
| | | Write: | | | | | | | | |
| 0x014E | CANRXERR | Read: | RXERR7 | RXERR6 | RXERR5 | RXERR4 | RXERR3 | RXERR2 | RXERR1 | RXERR0 |
| | | Write: | | | | | | | | |
| 0x014F | CANTXERR | Read: | TXERR7 | TXERR6 | TXERR5 | TXERR4 | TXERR3 | TXERR2 | TXERR1 | TXERR0 |
| | | Write: | | | | | | | | |
| 0x0150–0x0153 | CANIDAR0 - CANIDAR3 | Read: Write: | AC7 | AC6 | AC5 | AC4 | AC3 | AC2 | AC1 | AC0 |
| 0x0154–0x0157 | CANIDMR0 - CANIDMR3 | Read: Write: | AM7 | AM6 | AM5 | AM4 | AM3 | AM2 | AM1 | AM0 |
| 0x0158–0x015B | CANIDAR4 - CANIDAR7 | Read: Write: | AC7 | AC6 | AC5 | AC4 | AC3 | AC2 | AC1 | AC0 |
| 0x015C–0x015F | CANIDMR4 - CANIDMR7 | Read: Write: | AM7 | AM6 | AM5 | AM4 | AM3 | AM2 | AM1 | AM0 |
| 0x0160–0x016F | CANRXFG | Read: | FOREGROUND RECEIVE BUFFER see Table 1-2 | | | | | | | |
| | | Write: | | | | | | | | |
| 0x0170–0x017F | CANTXFG | Read: Write: | FOREGROUND TRANSMIT BUFFER see Table 1-2 | | | | | | | |

1. Not available on the MC9S12GC Family members. Those memory locations should not be accessed.

### Table 1-2. Detailed MSCAN Foreground Receive and Transmit Buffer Layout

| Address | Name | | Bit 7 | Bit 6 | Bit 5 | Bit 4 | Bit 3 | Bit 2 | Bit 1 | Bit 0 |
|---|---|---|---|---|---|---|---|---|---|---|
| | Extended ID | Read: | ID28 | ID27 | ID26 | ID25 | ID24 | ID23 | ID22 | ID21 |
| 0xXXX0 | Standard ID | Read: | ID10 | ID9 | ID8 | ID7 | ID6 | ID5 | ID4 | ID3 |
| | CANxRIDR0 | Write: | | | | | | | | |
| | Extended ID | Read: | ID20 | ID19 | ID18 | SRR=1 | IDE=1 | ID17 | ID16 | ID15 |
| 0xXXX1 | Standard ID | Read: | ID2 | ID1 | ID0 | RTR | IDE=0 | | | |
| | CANxRIDR1 | Write: | | | | | | | | |

**Table 1-2. Detailed MSCAN Foreground Receive and Transmit Buffer Layout (continued)**

| Address | Name | | Bit 7 | Bit 6 | Bit 5 | Bit 4 | Bit 3 | Bit 2 | Bit 1 | Bit 0 |
|---|---|---|---|---|---|---|---|---|---|---|
| 0xXXX2 | Extended ID | Read: | ID14 | ID13 | ID12 | ID11 | ID10 | ID9 | ID8 | ID7 |
| | Standard ID | Read: | | | | | | | | |
| | CANxRIDR2 | Write: | | | | | | | | |
| 0xXXX3 | Extended ID | Read: | ID6 | ID5 | ID4 | ID3 | ID2 | ID1 | ID0 | RTR |
| | Standard ID | Read: | | | | | | | | |
| | CANxRIDR3 | Write: | | | | | | | | |
| 0xXXX4–0xXXXB | CANxRDSR0–CANxRDSR7 | Read: | DB7 | DB6 | DB5 | DB4 | DB3 | DB2 | DB1 | DB0 |
| | | Write: | | | | | | | | |
| 0xXXXC | CANRxDLR | Read: | | | | | DLC3 | DLC2 | DLC1 | DLC0 |
| | | Write: | | | | | | | | |
| 0xXXXD | Reserved | Read: | | | | | | | | |
| | | Write: | | | | | | | | |
| 0xXXXE | CANxRTSRH | Read: | TSR15 | TSR14 | TSR13 | TSR12 | TSR11 | TSR10 | TSR9 | TSR8 |
| | | Write: | | | | | | | | |
| 0xXXXF | CANxRTSRL | Read: | TSR7 | TSR6 | TSR5 | TSR4 | TSR3 | TSR2 | TSR1 | TSR0 |
| | | Write: | | | | | | | | |
| 0xxx10 | Extended ID CANxTIDR0 | Read: Write: | ID28 | ID27 | ID26 | ID25 | ID24 | ID23 | ID22 | ID21 |
| | Standard ID | Read: Write: | ID10 | ID9 | ID8 | ID7 | ID6 | ID5 | ID4 | ID3 |
| 0xxx11 | Extended ID CANxTIDR1 | Read: Write: | ID20 | ID19 | ID18 | SRR=1 | IDE=1 | ID17 | ID16 | ID15 |
| | Standard ID | Read: Write: | ID2 | ID1 | ID0 | RTR | IDE=0 | | | |
| 0xxx12 | Extended ID CANxTIDR2 | Read: Write: | ID14 | ID13 | ID12 | ID11 | ID10 | ID9 | ID8 | ID7 |
| | Standard ID | Read: Write: | | | | | | | | |
| 0xxx13 | Extended ID CANxTIDR3 | Read: Write: | ID6 | ID5 | ID4 | ID3 | ID2 | ID1 | ID0 | RTR |
| | Standard ID | Read: Write: | | | | | | | | |
| 0xxx14–0xxx1B | CANxTDSR0–CANxTDSR7 | Read: Write: | DB7 | DB6 | DB5 | DB4 | DB3 | DB2 | DB1 | DB0 |
| 0xxx1C | CANxTDLR | Read: Write: | | | | | DLC3 | DLC2 | DLC1 | DLC0 |
| 0xxx1D | CONxTTBPR | Read: Write: | PRIO7 | PRIO6 | PRIO5 | PRIO4 | PRIO3 | PRIO2 | PRIO1 | PRIO0 |
| 0xxx1E | CANxTTSRH | Read: | TSR15 | TSR14 | TSR13 | TSR12 | TSR11 | TSR10 | TSR9 | TSR8 |
| | | Write: | | | | | | | | |
| 0xxx1F | CANxTTSRL | Read: | TSR7 | TSR6 | TSR5 | TSR4 | TSR3 | TSR2 | TSR1 | TSR0 |
| | | Write: | | | | | | | | |

## 0x0180–0x023F Reserved

| Address | Name | | Bit 7 | Bit 6 | Bit 5 | Bit 4 | Bit 3 | Bit 2 | Bit 1 | Bit 0 |
|---|---|---|---|---|---|---|---|---|---|---|
| 0x0180–0x023F | Reserved | Read: | 0 | 0 | 0 | 0 | 0 | 0 | 0 | 0 |
| | | Write: | | | | | | | | |

## 0x0240–0x027F PIM (Port Interface Module) (Sheet 1 of 3)

| Address | Name | | Bit 7 | Bit 6 | Bit 5 | Bit 4 | Bit 3 | Bit 2 | Bit 1 | Bit 0 |
|---|---|---|---|---|---|---|---|---|---|---|
| 0x0240 | PTT | Read: Write: | PTT7 | PTT6 | PTT5 | PTT4 | PTT3 | PTT2 | PTT1 | PTT0 |
| 0x0241 | PTIT | Read: | PTIT7 | PTIT6 | PTIT5 | PTIT4 | PTIT3 | PTIT2 | PTIT1 | PTIT0 |
| | | Write: | | | | | | | | |
| 0x0242 | DDRT | Read: Write: | DDRT7 | DDRT7 | DDRT5 | DDRT4 | DDRT3 | DDRT2 | DDRT1 | DDRT0 |
| 0x0243 | RDRT | Read: Write: | RDRT7 | RDRT6 | RDRT5 | RDRT4 | RDRT3 | RDRT2 | RDRT1 | RDRT0 |
| 0x0244 | PERT | Read: Write: | PERT7 | PERT6 | PERT5 | PERT4 | PERT3 | PERT2 | PERT1 | PERT0 |
| 0x0245 | PPST | Read: Write: | PPST7 | PPST6 | PPST5 | PPST4 | PPST3 | PPST2 | PPST1 | PPST0 |
| 0x0246 | Reserved | Read: | 0 | 0 | 0 | 0 | 0 | 0 | 0 | 0 |
| | | Write: | | | | | | | | |
| 0x0247 | MODRR | Read: | 0 | 0 | 0 | MODRR4 | MODRR3 | MODRR2 | MODRR1 | MODRR0 |
| | | Write: | | | | | | | | |
| 0x0248 | PTS | Read: | 0 | 0 | 0 | 0 | PTS3 | PTS2 | PTS1 | PTS0 |
| | | Write: | | | | | | | | |
| 0x0249 | PTIS | Read: | 0 | 0 | 0 | 0 | PTIS3 | PTIS2 | PTIS1 | PTIS0 |
| | | Write: | | | | | | | | |
| 0x024A | DDRS | Read: | 0 | 0 | 0 | 0 | DDRS3 | DDRS2 | DDRS1 | DDRS0 |
| | | Write: | | | | | | | | |
| 0x024B | RDRS | Read: | 0 | 0 | 0 | 0 | RDRS3 | RDRS2 | RDRS1 | RDRS0 |
| | | Write: | | | | | | | | |
| 0x024C | PERS | Read: | 0 | 0 | 0 | 0 | PERS3 | PERS2 | PERS1 | PERS0 |
| | | Write: | | | | | | | | |
| 0x024D | PPSS | Read: | 0 | 0 | 0 | 0 | PPSS3 | PPSS2 | PPSS1 | PPSS0 |
| | | Write: | | | | | | | | |
| 0x024E | WOMS | Read: | 0 | 0 | 0 | 0 | WOMS3 | WOMS2 | WOMS1 | WOMS0 |
| | | Write: | | | | | | | | |
| 0x024F | Reserved | Read: | 0 | 0 | 0 | 0 | 0 | 0 | 0 | 0 |
| | | Write: | | | | | | | | |
| 0x0250 | PTM | Read: | 0 | 0 | PTM5 | PTM4 | PTM3 | PTM2 | PTM1 | PTM0 |
| | | Write: | | | | | | | | |
| 0x0251 | PTIM | Read: | 0 | 0 | PTIM5 | PTIM4 | PTIM3 | PTIM2 | PTIM1 | PTIM0 |
| | | Write: | | | | | | | | |
| 0x0252 | DDRM | Read: | 0 | 0 | DDRM5 | DDRM4 | DDRM3 | DDRM2 | DDRM1 | DDRM0 |
| | | Write: | | | | | | | | |

## 0x0240–0x027F PIM (Port Interface Module) (Sheet 2 of 3)

| Address | Name | | Bit 7 | Bit 6 | Bit 5 | Bit 4 | Bit 3 | Bit 2 | Bit 1 | Bit 0 |
|---|---|---|---|---|---|---|---|---|---|---|
| 0x0253 | RDRM | Read: | 0 | 0 | RDRM5 | RDRM4 | RDRM3 | RDRM2 | RDRM1 | RDRM0 |
| | | Write: | | | | | | | | |
| 0x0254 | PERM | Read: | 0 | 0 | PERM5 | PERM4 | PERM3 | PERM2 | PERM1 | PERM0 |
| | | Write: | | | | | | | | |
| 0x0255 | PPSM | Read: | 0 | 0 | PPSM5 | PPSM4 | PPSM3 | PPSM2 | PPSM1 | PPSM0 |
| | | Write: | | | | | | | | |
| 0x0256 | WOMM | Read: | 0 | 0 | WOMM5 | WOMM4 | WOMM3 | WOMM2 | WOMM1 | WOMM0 |
| | | Write: | | | | | | | | |
| 0x0257 | Reserved | Read: | 0 | 0 | 0 | 0 | 0 | 0 | 0 | 0 |
| | | Write: | | | | | | | | |
| 0x0258 | PTP | Read: | PTP7 | PTP6 | PTP5 | PTP4 | PTP3 | PTP2 | PTP1 | PTP0 |
| | | Write: | | | | | | | | |
| 0x0259 | PTIP | Read: | PTIP7 | PTIP6 | PTIP5 | PTIP4 | PTIP3 | PTIP2 | PTIP1 | PTIP0 |
| | | Write: | | | | | | | | |
| 0x025A | DDRP | Read: | DDRP7 | DDRP7 | DDRP5 | DDRP4 | DDRP3 | DDRP2 | DDRP1 | DDRP0 |
| | | Write: | | | | | | | | |
| 0x025B | RDRP | Read: | RDRP7 | RDRP6 | RDRP5 | RDRP4 | RDRP3 | RDRP2 | RDRP1 | RDRP0 |
| | | Write: | | | | | | | | |
| 0x025C | PERP | Read: | PERP7 | PERP6 | PERP5 | PERP4 | PERP3 | PERP2 | PERP1 | PERP0 |
| | | Write: | | | | | | | | |
| 0x025D | PPSP | Read: | PPSP7 | PPSP6 | PPSP5 | PPSP4 | PPSP3 | PPSP2 | PPSP1 | PPSS0 |
| | | Write: | | | | | | | | |
| 0x025E | PIEP | Read: | PIEP7 | PIEP6 | PIEP5 | PIEP4 | PIEP3 | PIEP2 | PIEP1 | PIEP0 |
| | | Write: | | | | | | | | |
| 0x025F | PIFP | Read: | PIFP7 | PIFP6 | PIFP5 | PIFP4 | PIFP3 | PIFP2 | PIFP1 | PIFP0 |
| | | Write: | | | | | | | | |
| 0x0260 | Reserved | Read: | 0 | 0 | 0 | 0 | 0 | 0 | 0 | 0 |
| | | Write: | | | | | | | | |
| 0x0261 | Reserved | Read: | 0 | 0 | 0 | 0 | 0 | 0 | 0 | 0 |
| | | Write: | | | | | | | | |
| 0x0262 | Reserved | Read: | 0 | 0 | 0 | 0 | 0 | 0 | 0 | 0 |
| | | Write: | | | | | | | | |
| 0x0263 | Reserved | Read: | 0 | 0 | 0 | 0 | 0 | 0 | 0 | 0 |
| | | Write: | | | | | | | | |
| 0x0264 | Reserved | Read: | 0 | 0 | 0 | 0 | 0 | 0 | 0 | 0 |
| | | Write: | | | | | | | | |
| 0x0265 | Reserved | Read: | 0 | 0 | 0 | 0 | 0 | 0 | 0 | 0 |
| | | Write: | | | | | | | | |
| 0x0266 | Reserved | Read: | 0 | 0 | 0 | 0 | 0 | 0 | 0 | 0 |
| | | Write: | | | | | | | | |
| 0x0267 | Reserved | Read: | 0 | 0 | 0 | 0 | 0 | 0 | 0 | 0 |
| | | Write: | | | | | | | | |
| 0x0268 | PTJ | Read: | PTJ7 | PTJ6 | 0 | 0 | 0 | 0 | 0 | 0 |
| | | Write: | | | | | | | | |
| 0x0269 | PTIJ | Read: | PTIJ7 | PTIJ6 | 0 | 0 | 0 | 0 | 0 | 0 |
| | | Write: | | | | | | | | |

## 0x0240–0x027F PIM (Port Interface Module) (Sheet 3 of 3)

| Address | Name | | Bit 7 | Bit 6 | Bit 5 | Bit 4 | Bit 3 | Bit 2 | Bit 1 | Bit 0 |
|---|---|---|---|---|---|---|---|---|---|---|
| 0x026A | DDRJ | Read: | DDRJ7 | DDRJ7 | 0 | 0 | 0 | 0 | 0 | 0 |
| | | Write: | | | | | | | | |
| 0x026B | RDRJ | Read: | RDRJ7 | RDRJ6 | 0 | 0 | 0 | 0 | 0 | 0 |
| | | Write: | | | | | | | | |
| 0x026C | PERJ | Read: | PERJ7 | PERJ6 | 0 | 0 | 0 | 0 | 0 | 0 |
| | | Write: | | | | | | | | |
| 0x026D | PPSJ | Read: | PPSJ7 | PPSJ6 | 0 | 0 | 0 | 0 | 0 | 0 |
| | | Write: | | | | | | | | |
| 0x026E | PIEJ | Read: | PIEJ7 | PIEJ6 | 0 | 0 | 0 | 0 | 0 | 0 |
| | | Write: | | | | | | | | |
| 0x026F | PIFJ | Read: | PIFJ7 | PIFJ6 | 0 | 0 | 0 | 0 | 0 | 0 |
| | | Write: | | | | | | | | |
| 0x0270 | PTAD | Read: | PTAD7 | PTAD6 | PTAD5 | PTAD4 | PTAD3 | PTAD2 | PTAD1 | PTAD0 |
| | | Write: | | | | | | | | |
| 0x0271 | PTIAD | Read: | PTIAD7 | PTIAD6 | PTIAD5 | PTIAD4 | PTIAD3 | PTIAD2 | PTIAD1 | PTIJ7 |
| | | Write: | | | | | | | | |
| 0x0272 | DDRAD | Read: | DDRAD7 | DDRAD6 | DDRAD5 | DDRAD4 | DDRAD3 | DDRAD2 | DDRAD1 | DDRAD0 |
| | | Write: | | | | | | | | |
| 0x0273 | RDRAD | Read: | RDRAD7 | RDRAD6 | RDRAD5 | RDRAD4 | RDRAD3 | RDRAD2 | RDRAD1 | RDRAD0 |
| | | Write: | | | | | | | | |
| 0x0274 | PERAD | Read: | PERAD7 | PERAD6 | PERAD5 | PERAD4 | PERAD3 | PERAD2 | PERAD1 | PERAD0 |
| | | Write: | | | | | | | | |
| 0x0275 | PPSAD | Read: | PPSAD7 | PPSAD6 | PPSAD5 | PPSAD4 | PPSAD3 | PPSAD2 | PPSAD1 | PPSAD0 |
| | | Write: | | | | | | | | |
| 0x0276-0x027F | Reserved | Read: | 0 | 0 | 0 | 0 | 0 | 0 | 0 | 0 |
| | | Write: | | | | | | | | |

## 0x0280–0x03FF Reserved Space

| Address | Name | | Bit 7 | Bit 6 | Bit 5 | Bit 4 | Bit 3 | Bit 2 | Bit 1 | Bit 0 |
|---|---|---|---|---|---|---|---|---|---|---|
| 0x0280–0x2FF | Reserved | Read: | 0 | 0 | 0 | 0 | 0 | 0 | 0 | 0 |
| | | Write: | | | | | | | | |
| 0x0300–0x03FF | Unimplemented | Read: | 0 | 0 | 0 | 0 | 0 | 0 | 0 | 0 |
| | | Write: | | | | | | | | |

### 1.2.3 Part ID Assignments

The part ID is located in two 8-bit registers PARTIDH and PARTIDL (addresses 0x001A and ox001B after reset). The read-only value is a unique part ID for each revision of the chip. Table 1-3 shows the assigned part ID numbers for production mask sets.

**Table 1-3. Assigned Part ID Numbers**

| Device | Mask Set Number | Part ID[1] |
|---|---|---|
| MC9S12C32 | 1L45J | $3300 |
| MC9S12C32 | 2L45J | $3302 |
| MC9S12C32 | 1M34C | $3311 |
| MC9S12GC16 | 2L45J | $3302 |
| MC9S12GC32 | 2L45J | $3302 |
| MC9S12GC32 | 1M34C | $3311 |
| MC9S12C64,MC9S12C96,MC9S12C128 | 2L09S | $3102 |
| MC9S12GC64,MC9S12GC96,MC9S12GC128 | 2L09S | $3102 |
| MC9S12C64,MC9S12C96,MC9S12C128 | 0M66G | $3103 |
| MC9S12GC64,MC9S12GC96,MC9S12GC128 | 0M66G | $3103 |

1. The coding is as follows:
   Bit 15–12: Major family identifier
   Bit 11–8: Minor family identifier
   Bit 7–4: Major mask set revision number including FAB transfers
   Bit 3–0: Minor — non full — mask set revision

The device memory sizes are located in two 8-bit registers MEMSIZ0 and MEMSIZ1 (addresses 0x001C and 0x001D after reset). Table 1-4 shows the read-only values of these registers. Refer to Module Mapping and Control (MMC) Block Guide for further details.

**Table 1-4. Memory Size Registers**

| Device | Register Name | Value |
|---|---|---|
| MC9S12GC16 | MEMSIZ0 | $00 |
| | MEMSIZ1 | $80 |
| MC9S12C32, MC9S12GC32 | MEMSIZ0 | $00 |
| | MEMSIZ1 | $80 |
| MC9S12C64, MC9S12GC64 | MEMSIZ0 | $01 |
| | MEMSIZ1 | $C0 |
| MC9S12C96,MC9S12GC96 | MEMSIZ0 | $01 |
| | MEMSIZ1 | $C0 |
| MC9S12C128, MC9S12GC128 | MEMSIZ0 | $01 |
| | MEMSIZ1 | $C0 |

## 1.3 Signal Description

### 1.3.1 Device Pinouts

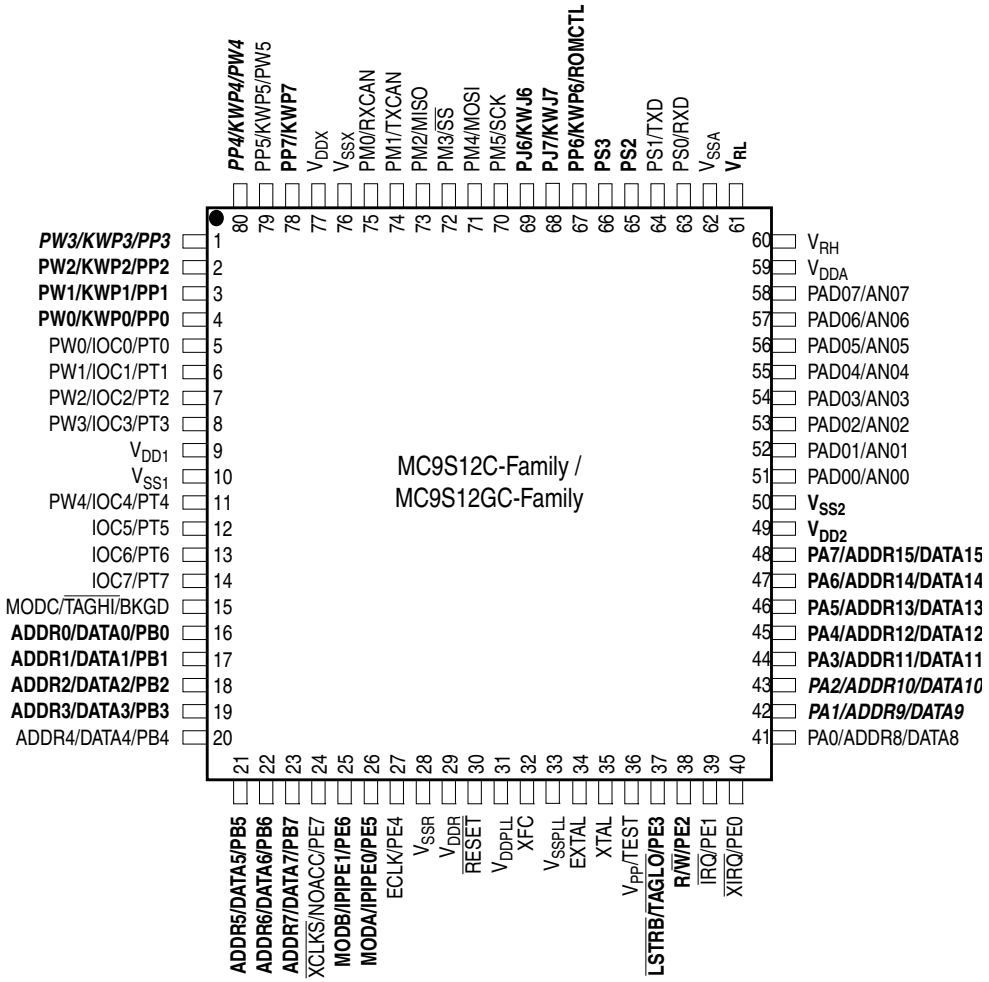


Signals shown in **Bold** are not available on the 52- or 48-pin package
Signals shown in ***Bold Italic*** are available in the 52-pin, but not the 48-pin package

**Figure 1-7. Pin Assignments in 80-Pin QFP**

The MODRR register within the PIM allows for mapping of PWM channels to Port T in the absence of Port P pins for the low pin count packages. For the 80QFP package option it is recommended not to use MODRR since this is intended to support PWM channel availability in low pin count packages. Note that when mapping PWM channels to Port T in an 80QFP option, the associated PWM channels are then mapped to both Port P and Port T

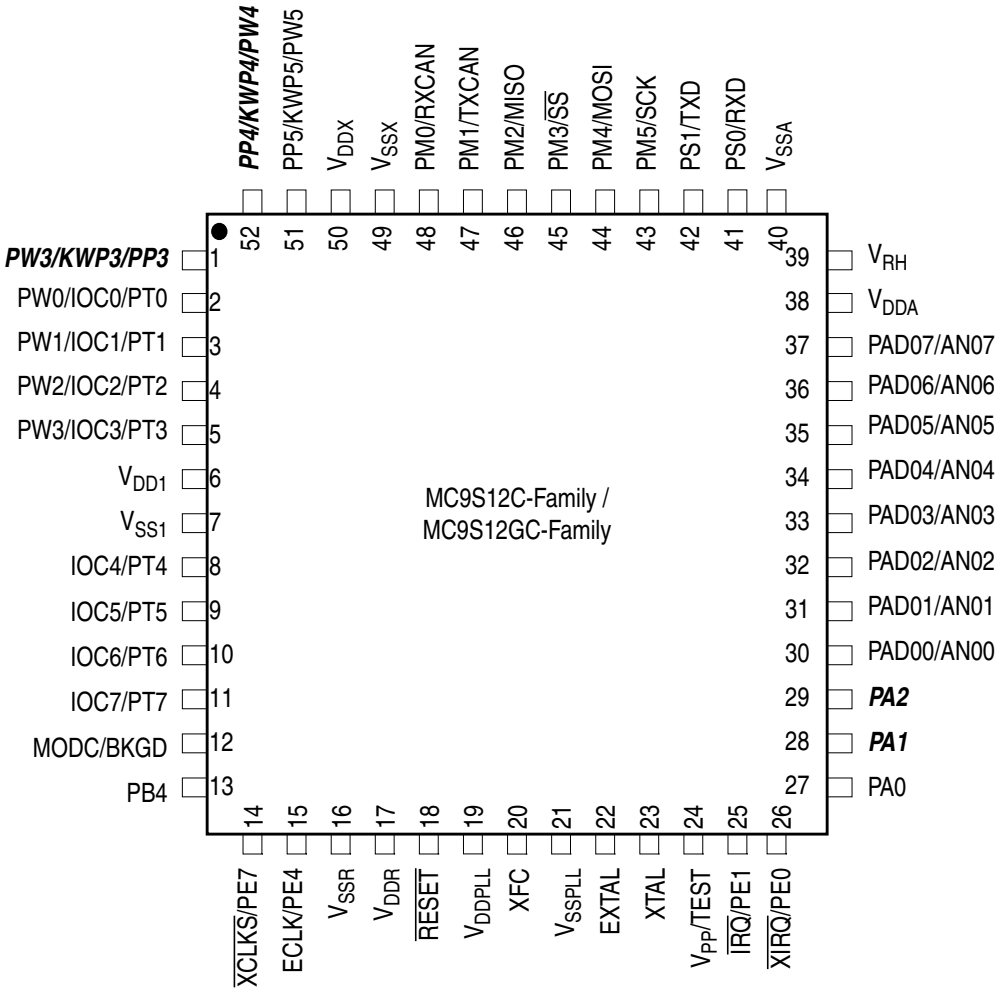


* Signals shown in ***Bold italic*** are not available on the 48-pin package

**Figure 1-8. Pin Assignments in 52-Pin LQFP**

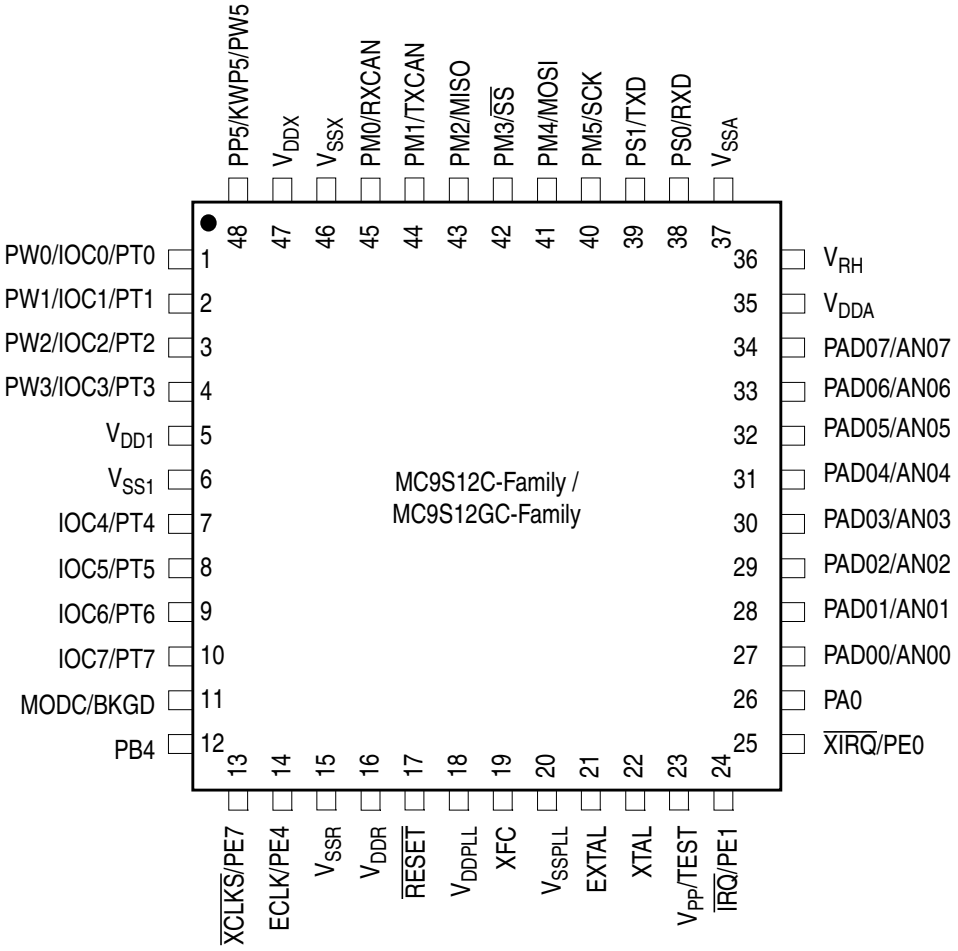


**Figure 1-9. Pin Assignments in 48-Pin LQFP**

## 1.3.2 Signal Properties Summary

**Table 1-5. Signal Properties**

| Pin Name Function 1 | Pin Name Function 2 | Pin Name Function 3 | Power Domain | Internal Pull Resistor | | Description |
|---|---|---|---|---|---|---|
| | | | | CTRL | Reset State | |
| EXTAL | — | — | $V_{DDPLL}$ | NA | NA | Oscillator pins |
| XTAL | — | — | $V_{DDPLL}$ | NA | NA | |
| $\overline{RESET}$ | — | — | $V_{DDX}$ | None | None | External reset pin |
| XFC | — | — | $V_{DDPLL}$ | NA | NA | PLL loop filter pin |
| TEST | $V_{PP}$ | — | $V_{SSX}$ | NA | NA | Test pin only |
| BKGD | MODC | $\overline{TAGHI}$ | $V_{DDX}$ | Up | Up | Background debug, mode pin, tag signal high |
| PE7 | NOACC | $\overline{XCLKS}$ | $V_{DDX}$ | PUCR | Up | Port E I/O pin, access, clock select |
| PE6 | IPIPE1 | MODB | $V_{DDX}$ | While $\overline{RESET}$ pin is low: Down | | Port E I/O pin and pipe status |
| PE5 | IPIPE0 | MODA | $V_{DDX}$ | While $\overline{RESET}$ pin is low: Down | | Port E I/O pin and pipe status |
| PE4 | ECLK | — | $V_{DDX}$ | PUCR | Mode Dep(1) | Port E I/O pin, bus clock output |
| PE3 | LSTRB | $\overline{TAGLO}$ | $V_{DDX}$ | PUCR | Mode Dep[1] | Port E I/O pin, low strobe, tag signal low |
| PE2 | R/$\overline{W}$ | — | $V_{DDX}$ | PUCR | Mode Dep[1] | Port E I/O pin, R/$\overline{W}$ in expanded modes |
| PE1 | $\overline{IRQ}$ | — | $V_{DDX}$ | PUCR | Up | Port E input, external interrupt pin |
| PE0 | $\overline{XIRQ}$ | — | $V_{DDX}$ | PUCR | Up | Port E input, non-maskable interrupt pin |
| PA[7:3] | ADDR[15:1]/ DATA[15:1] | — | $V_{DDX}$ | PUCR | Disabled | Port A I/O pin and multiplexed address/data |
| PA[2:1] | ADDR[10:9]/ DATA[10:9] | — | $V_{DDX}$ | PUCR | Disabled | Port A I/O pin and multiplexed address/data |
| PA[0] | ADDR[8]/ DATA[8] | — | $V_{DDX}$ | PUCR | Disabled | Port A I/O pin and multiplexed address/data |
| PB[7:5] | ADDR[7:5]/ DATA[7:5] | — | $V_{DDX}$ | PUCR | Disabled | Port B I/O pin and multiplexed address/data |
| PB[4] | ADDR[4]/ DATA[4] | — | $V_{DDX}$ | PUCR | Disabled | Port B I/O pin and multiplexed address/data |
| PB[3:0] | ADDR[3:0]/ DATA[3:0] | — | $V_{DDX}$ | PUCR | Disabled | Port B I/O pin and multiplexed address/data |
| PAD[7:0] | AN[7:0] | — | $V_{DDA}$ | PERAD/P PSAD | Disabled | Port AD I/O pins and ATD inputs |
| PP[7] | KWP[7] | — | $V_{DDX}$ | PERP/ PPSP | Disabled | Port P I/O pins and keypad wake-up |
| PP[6] | KWP[6] | ROMCTL | $V_{DDX}$ | PERP/ PPSP | Disabled | Port P I/O pins, keypad wake-up, and ROMON enable. |
| PP[5] | KWP[5] | PW5 | $V_{DDX}$ | PERP/ PPSP | Disabled | Port P I/O pin, keypad wake-up, PW5 output |
| PP[4:3] | KWP[4:3] | PW[4:3] | $V_{DDX}$ | PERP/ PPSP | Disabled | Port P I/O pin, keypad wake-up, PWM output |

**Table 1-5. Signal Properties (continued)**

| Pin Name Function 1 | Pin Name Function 2 | Pin Name Function 3 | Power Domain | Internal Pull Resistor | | Description |
|---|---|---|---|---|---|---|
| | | | | CTRL | Reset State | |
| PP[2:0] | KWP[2:0] | PW[2:0] | $V_{DDX}$ | PERP/ PPSP | Disabled | Port P I/O pins, keypad wake-up, PWM outputs |
| PJ[7:6] | KWJ[7:6] | — | $V_{DDX}$ | PERJ/ PPSJ | Disabled | Port J I/O pins and keypad wake-up |
| PM5 | SCK | — | $V_{DDX}$ | PERM/ PPSM | Up | Port M I/O pin and SPI SCK signal |
| PM4 | MOSI | — | $V_{DDX}$ | PERM/ PPSM | Up | Port M I/O pin and SPI MOSI signal |
| PM3 | $\overline{SS}$ | — | $V_{DDX}$ | PERM/ PPSM | Up | Port M I/O pin and SPI $\overline{SS}$ signal |
| PM2 | MISO | — | $V_{DDX}$ | PERM/ PPSM | Up | Port M I/O pin and SPI MISO signal |
| PM1 | TXCAN | — | $V_{DDX}$ | PERM/ PPSM | Up | Port M I/O pin and CAN transmit signal[(2)] |
| PM0 | RXCAN | — | $V_{DDX}$ | PERM/ PPSM | Up | Port M I/O pin and CAN receive signal[2] |
| PS[3:2] | — | — | $V_{DDX}$ | PERS/ PPSS | Up | Port S I/O pins |
| PS1 | TXD | — | $V_{DDX}$ | PERS/ PPSS | Up | Port S I/O pin and SCI transmit signal |
| PS0 | RXD | — | $V_{DDX}$ | PERS/ PPSS | Up | Port S I/O pin and SCI receive signal |
| PT[7:5] | IOC[7:5] | — | $V_{DDX}$ | PERT/ PPST | Disabled | Port T I/O pins shared with timer (TIM) |
| PT[4:0] | IOC[4:0] | PW[4:0] | $V_{DDX}$ | PERT/ PPST | Disabled | Port T I/O pins shared with timer and PWM |

1. The Port E output buffer enable signal control at reset is determined by the PEAR register and is mode dependent. For example, in special test mode RDWE = LSTRE = 1 which enables the PE[3:2] output buffers and disables the pull-ups. Refer to S12_MEBI user guide for PEAR register details.
2. CAN functionality is not available on the MC9S12GC Family members.

## 1.3.3 Pin Initialization for 48- and 52-Pin LQFP Bond Out Versions

Not Bonded Pins:

If the port pins are not bonded out in the chosen package the user should initialize the registers to be inputs with enabled pull resistance to avoid excess current consumption. This applies to the following pins:

(48LQFP): Port A[7:1], Port B[7:5], Port B[3:0], PortE[6,5,3,2], Port P[7:6], PortP[4:0], Port J[7:6], PortS[3:2]

(52LQFP): Port A[7:3], Port B[7:5], Port B[3:0], PortE[6,5,3,2], Port P[7:6], PortP[2:0], Port J[7:6], PortS[3:2]

## 1.3.4 Detailed Signal Descriptions

### 1.3.4.1 EXTAL, XTAL — Oscillator Pins

EXTAL and XTAL are the crystal driver and external clock pins. On reset all the device clocks are derived from the EXTAL input frequency. XTAL is the crystal output.

### 1.3.4.2 $\overline{\text{RESET}}$ — External Reset Pin

$\overline{\text{RESET}}$ is an active low bidirectional control signal that acts as an input to initialize the MCU to a known start-up state. It also acts as an open-drain output to indicate that an internal failure has been detected in either the clock monitor or COP watchdog circuit. External circuitry connected to the $\overline{\text{RESET}}$ pin should not include a large capacitance that would interfere with the ability of this signal to rise to a valid logic one within 32 ECLK cycles after the low drive is released. Upon detection of any reset, an internal circuit drives the $\overline{\text{RESET}}$ pin low and a clocked reset sequence controls when the MCU can begin normal processing.

### 1.3.4.3 TEST / $V_{PP}$ — Test Pin

This pin is reserved for test and must be tied to $V_{SS}$ in all applications.

### 1.3.4.4 XFC — PLL Loop Filter Pin

Dedicated pin used to create the PLL loop filter. See CRG BUG for more detailed information.PLL loop filter. Please ask your Motorola representative for the interactive application note to compute PLL loop filter elements. Any current leakage on this pin must be avoided.

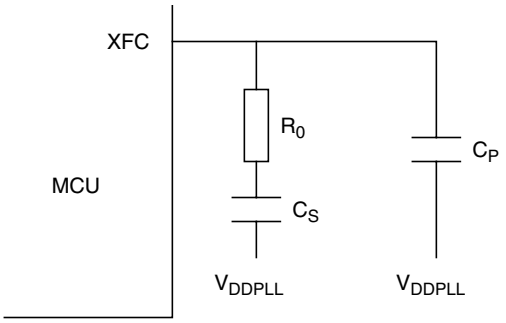


**Figure 1-10. PLL Loop Filter Connections**

### 1.3.4.5 BKGD / $\overline{\text{TAGHI}}$ / MODC — Background Debug, Tag High, and Mode Pin

The BKGD / $\overline{\text{TAGHI}}$ / MODC pin is used as a pseudo-open-drain pin for the background debug communication. In MCU expanded modes of operation when instruction tagging is on, an input low on this pin during the falling edge of E-clock tags the high half of the instruction word being read into the instruction queue. It is also used as a MCU operating mode select pin at the rising edge during reset, when the state of this pin is latched to the MODC bit.

#### 1.3.4.6 PA[7:0] / ADDR[15:8] / DATA[15:8] — Port A I/O Pins

PA7–PA0 are general purpose input or output pins,. In MCU expanded modes of operation, these pins are used for the multiplexed external address and data bus. PA[7:1] pins are not available in the 48-pin package version. PA[7:3] are not available in the 52-pin package version.

#### 1.3.4.7 PB[7:0] / ADDR[7:0] / DATA[7:0] — Port B I/O Pins

PB7–PB0 are general purpose input or output pins. In MCU expanded modes of operation, these pins are used for the multiplexed external address and data bus. PB[7:5] and PB[3:0] pins are not available in the 48-pin nor 52-pin package version.

#### 1.3.4.8 PE7 / NOACC / $\overline{\text{XCLKS}}$ — Port E I/O Pin 7

PE7 is a general purpose input or output pin. During MCU expanded modes of operation, the NOACC signal, when enabled, is used to indicate that the current bus cycle is an unused or “free” cycle. This signal will assert when the CPU is not using the bus.The $\overline{\text{XCLKS}}$ is an input signal which controls whether a crystal in combination with the internal Colpitts (low power) oscillator is used or whether Pierce oscillator/external clock circuitry is used. The state of this pin is latched at the rising edge of $\overline{\text{RESET}}$. If the input is a logic low the EXTAL pin is configured for an external clock drive or a Pierce oscillator. If input is a logic high a Colpitts oscillator circuit is configured on EXTAL and XTAL. Since this pin is an input with a pull-up device during reset, if the pin is left floating, the default configuration is a Colpitts oscillator circuit on EXTAL and XTAL.

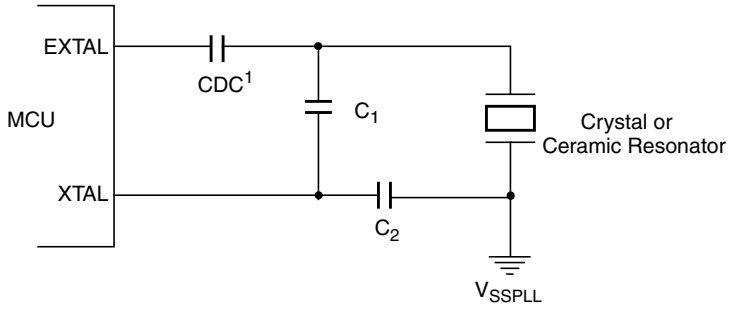


1. Due to the nature of a translated ground Colpitts oscillator a DC voltage bias is applied to the crystal. Please contact the crystal manufacturer for crystal DC.

**Figure 1-11. Colpitts Oscillator Connections (PE7 = 1)**

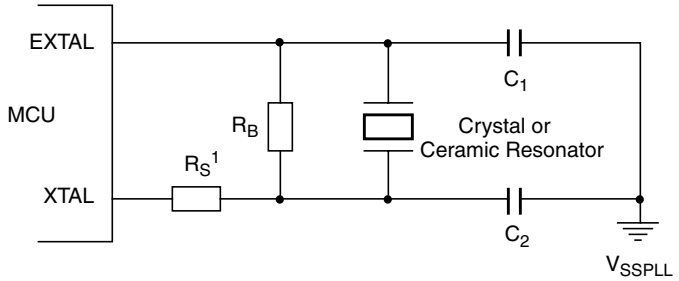


1. RS can be zero (shorted) when used with higher frequency crystals, refer to manufacturer’s data.

**Figure 1-12. Pierce Oscillator Connections (PE7 = 0)**

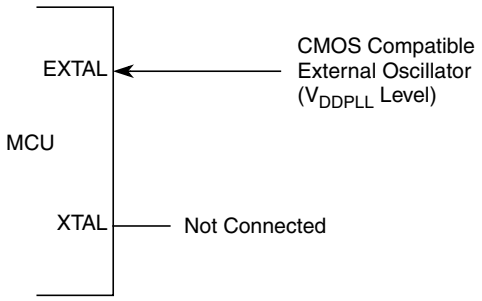


**Figure 1-13. External Clock Connections (PE7 = 0)**

### 1.3.4.9 PE6 / MODB / IPIPE1 — Port E I/O Pin 6

PE6 is a general purpose input or output pin. It is used as a MCU operating mode select pin during reset. The state of this pin is latched to the MODB bit at the rising edge of $\overline{\text{RESET}}$. This pin is shared with the instruction queue tracking signal IPIPE1. This pin is an input with a pull-down device which is only active when $\overline{\text{RESET}}$ is low. PE[6] is not available in the 48- / 52-pin package versions.

### 1.3.4.10 PE5 / MODA / IPIPE0 — Port E I/O Pin 5

PE5 is a general purpose input or output pin. It is used as a MCU operating mode select pin during reset. The state of this pin is latched to the MODA bit at the rising edge of $\overline{\text{RESET}}$. This pin is shared with the instruction queue tracking signal IPIPE0. This pin is an input with a pull-down device which is only active when $\overline{\text{RESET}}$ is low. This pin is not available in the 48- / 52-pin package versions.

### 1.3.4.11 PE4 / ECLK— Port E I/O Pin [4] / E-Clock Output

ECLK is the output connection for the internal bus clock. It is used to demultiplex the address and data in expanded modes and is used as a timing reference. ECLK frequency is equal to 1/2 the crystal frequency out of reset. The ECLK pin is initially configured as ECLK output with stretch in all expanded modes. The E clock output function depends upon the settings of the NECLK bit in the PEAR register, the IVIS bit in the MODE register and the ESTR bit in the EBICTL register. All clocks, including the E clock, are halted when the MCU is in stop mode. It is possible to configure the MCU to interface to slow external memory. ECLK can be stretched for such accesses. Reference the MISC register (EXSTR[1:0] bits) for more information. In normal expanded narrow mode, the E clock is available for use in external select decode logic or as a constant speed clock for use in the external application system. Alternatively PE4 can be used as a general purpose input or output pin.

### 1.3.4.12 PE3 / $\overline{\text{LSTRB}}$ — Port E I/O Pin [3] / Low-Byte Strobe ($\overline{\text{LSTRB}}$)

In all modes this pin can be used as a general-purpose I/O and is an input with an active pull-up out of reset. If the strobe function is required, it should be enabled by setting the LSTRE bit in the PEAR register. This signal is used in write operations. Therefore external low byte writes will not be possible until this function is enabled. This pin is also used as $\overline{\text{TAGLO}}$ in special expanded modes and is multiplexed with the $\overline{\text{LSTRB}}$ function. This pin is not available in the 48- / 52-pin package versions.

#### 1.3.4.13 PE2 / R/$\overline{W}$ — Port E I/O Pin [2] / Read/Write

In all modes this pin can be used as a general-purpose I/O and is an input with an active pull-up out of reset. If the read/write function is required it should be enabled by setting the RDWE bit in the PEAR register. External writes will not be possible until enabled. This pin is not available in the 48- / 52-pin package versions.

#### 1.3.4.14 PE1 / $\overline{IRQ}$ — Port E Input Pin [1] / Maskable Interrupt Pin

The $\overline{IRQ}$ input provides a means of applying asynchronous interrupt requests to the MCU. Either falling edge-sensitive triggering or level-sensitive triggering is program selectable (INTCR register). $\overline{IRQ}$ is always enabled and configured to level-sensitive triggering out of reset. It can be disabled by clearing IRQEN bit (INTCR register). When the MCU is reset the $\overline{IRQ}$ function is masked in the condition code register. This pin is always an input and can always be read. There is an active pull-up on this pin while in reset and immediately out of reset. The pull-up can be turned off by clearing PUPEE in the PUCR register.

#### 1.3.4.15 PE0 / $\overline{XIRQ}$ — Port E input Pin [0] / Non Maskable Interrupt Pin

The $\overline{XIRQ}$ input provides a means of requesting a non-maskable interrupt after reset initialization. During reset, the X bit in the condition code register (CCR) is set and any interrupt is masked until MCU software enables it. Because the $\overline{XIRQ}$ input is level sensitive, it can be connected to a multiple-source wired-OR network. This pin is always an input and can always be read. There is an active pull-up on this pin while in reset and immediately out of reset. The pull-up can be turned off by clearing PUPEE in the PUCR register.

#### 1.3.4.16 PAD[7:0] / AN[7:0] — Port AD I/O Pins [7:0]

PAD7–PAD0 are general purpose I/O pins and also analog inputs for the analog to digital converter. In order to use a PAD pin as a standard input, the corresponding ATDDIEN register bit must be set. These bits are cleared out of reset to configure the PAD pins for A/D operation.

When the A/D converter is active in multi-channel mode, port inputs are scanned and converted irrespective of Port AD configuration. Thus Port AD pins that are configured as digital inputs or digital outputs are also converted in the A/D conversion sequence.

#### 1.3.4.17 PP[7] / KWP[7] — Port P I/O Pin [7]

PP7 is a general purpose input or output pin, shared with the keypad interrupt function. When configured as an input, it can generate interrupts causing the MCU to exit stop or wait mode. This pin is not available in the 48- / 52-pin package versions.

#### 1.3.4.18 PP[6] / KWP[6]/ROMCTL — Port P I/O Pin [6]

PP6 is a general purpose input or output pin, shared with the keypad interrupt function. When configured as an input, it can generate interrupts causing the MCU to exit stop or wait mode. This pin is not available in the 48- / 52-pin package versions. During MCU expanded modes of operation, this pin is used to enable

the Flash EEPROM memory in the memory map (ROMCTL). At the rising edge of $\overline{\text{RESET}}$, the state of this pin is latched to the ROMON bit.

- PP6 = 1 in emulation modes equates to ROMON = 0 (ROM space externally mapped)
- PP6 = 0 in expanded modes equates to ROMON = 0 (ROM space externally mapped)

#### 1.3.4.19 PP[5:0] / KWP[5:0] / PW[5:0] — Port P I/O Pins [5:0]

PP[5:0] are general purpose input or output pins, shared with the keypad interrupt function. When configured as inputs, they can generate interrupts causing the MCU to exit stop or wait mode.

PP[5:0] are also shared with the PWM output signals, PW[5:0]. Pins PP[2:0] are only available in the 80-pin package version. Pins PP[4:3] are not available in the 48-pin package version.

#### 1.3.4.20 PJ[7:6] / KWJ[7:6] — Port J I/O Pins [7:6]

PJ[7:6] are general purpose input or output pins, shared with the keypad interrupt function. When configured as inputs, they can generate interrupts causing the MCU to exit stop or wait mode. These pins are not available in the 48-pin package version nor in the 52-pin package version.

#### 1.3.4.21 PM5 / SCK — Port M I/O Pin 5

PM5 is a general purpose input or output pin and also the serial clock pin SCK for the serial peripheral interface (SPI).

#### 1.3.4.22 PM4 / MOSI — Port M I/O Pin 4

PM4 is a general purpose input or output pin and also the master output (during master mode) or slave input (during slave mode) pin for the serial peripheral interface (SPI).

#### 1.3.4.23 PM3 / $\overline{\text{SS}}$ — Port M I/O Pin 3

PM3 is a general purpose input or output pin and also the slave select pin $\overline{\text{SS}}$ for the serial peripheral interface (SPI).

#### 1.3.4.24 PM2 / MISO — Port M I/O Pin 2

PM2 is a general purpose input or output pin and also the master input (during master mode) or slave output (during slave mode) pin for the serial peripheral interface (SPI).

#### 1.3.4.25 PM1 / TXCAN — Port M I/O Pin 1

PM1 is a general purpose input or output pin and the transmit pin, TXCAN, of the CAN module if available.

#### 1.3.4.26 PM0 / RXCAN — Port M I/O Pin 0

PM0 is a general purpose input or output pin and the receive pin, RXCAN, of the CAN module if available.

#### 1.3.4.27 PS[3:2] — Port S I/O Pins [3:2]

PS3 and PS2 are general purpose input or output pins. These pins are not available in the 48- / 52-pin package versions.

#### 1.3.4.28 PS1 / TXD — Port S I/O Pin 1

PS1 is a general purpose input or output pin and the transmit pin, TXD, of serial communication interface (SCI).

#### 1.3.4.29 PS0 / RXD — Port S I/O Pin 0

PS0 is a general purpose input or output pin and the receive pin, RXD, of serial communication interface (SCI).

#### 1.3.4.30 PT[7:5] / IOC[7:5] — Port T I/O Pins [7:5]

PT7–PT5 are general purpose input or output pins. They can also be configured as the timer system input capture or output compare pins IOC7-IOC5.

#### 1.3.4.31 PT[4:0] / IOC[4:0] / PW[4:0]— Port T I/O Pins [4:0]

PT4–PT0 are general purpose input or output pins. They can also be configured as the timer system input capture or output compare pins IOC[n] or as the PWM outputs PW[n].

### 1.3.5 Power Supply Pins

#### 1.3.5.1 $V_{DDX}$,$V_{SSX}$ — Power and Ground Pins for I/O Drivers

External power and ground for I/O drivers. Bypass requirements depend on how heavily the MCU pins are loaded.

#### 1.3.5.2 $V_{DDR}$, $V_{SSR}$ — Power and Ground Pins for I/O Drivers and for Internal Voltage Regulator

External power and ground for the internal voltage regulator. Connecting $V_{DDR}$ to ground disables the internal voltage regulator.

#### 1.3.5.3 $V_{DD1}$, $V_{DD2}$, $V_{SS1}$, $V_{SS2}$ — Internal Logic Power Pins

Power is supplied to the MCU through $V_{DD}$ and $V_{SS}$. This 2.5V supply is derived from the internal voltage regulator. There is no static load on those pins allowed. The internal voltage regulator is turned off, if $V_{DDR}$ is tied to ground.

#### 1.3.5.4 $V_{DDA}$, $V_{SSA}$ — Power Supply Pins for ATD and VREG

$V_{DDA}$, $V_{SSA}$ are the power supply and ground input pins for the voltage regulator reference and the analog to digital converter.

#### 1.3.5.5 $V_{RH}$, $V_{RL}$ — ATD Reference Voltage Input Pins

$V_{RH}$ and $V_{RL}$ are the reference voltage input pins for the analog to digital converter.

#### 1.3.5.6 $V_{DDPLL}$, $V_{SSPLL}$ — Power Supply Pins for PLL

Provides operating voltage and ground for the oscillator and the phased-locked loop. This allows the supply voltage to the oscillator and PLL to be bypassed independently. This 2.5V voltage is generated by the internal voltage regulator.

**Table 1-6. Power and Ground Connection Summary**

| Mnemonic | Nominal Voltage (V) | Description |
|---|---|---|
| $V_{DD1, VDD2}$ | 2.5 | Internal power and ground generated by internal regulator. These also allow an external source to supply the core $V_{DD}/V_{SS}$ voltages and bypass the internal voltage regulator.<br>In the 48 and 52 LQFP packages $V_{DD2}$ and $V_{SS2}$ are not available. |
| $V_{SS1, VSS2}$ | 0 | |
| $V_{DDR}$ | 5.0 | External power and ground, supply to internal voltage regulator. |
| $V_{SSR}$ | 0 | |
| $V_{DDX}$ | 5.0 | External power and ground, supply to pin drivers. |
| $V_{SSX}$ | 0 | |
| $V_{DDA}$ | 5.0 | Operating voltage and ground for the analog-to-digital converters and the reference for the internal voltage regulator, allows the supply voltage to the A/D to be bypassed independently. |
| $V_{SSA}$ | 0 | |
| $V_{RH}$ | 5.0 | Reference voltage low for the ATD converter.<br>In the 48 and 52 LQFP packages $V_{RL}$ is bonded to $V_{SSA}$. |
| $V_{RL}$ | 0 | |
| $V_{DDPLL}$ | 2.5 | Provides operating voltage and ground for the phased-locked loop. This allows the supply voltage to the PLL to be bypassed independently. Internal power and ground generated by internal regulator. |
| $V_{SSPLL}$ | 0 | |

**NOTE**

All $V_{SS}$ pins must be connected together in the application. Because fast signal transitions place high, short-duration current demands on the power supply, use bypass capacitors with high-frequency characteristics and place them as close to the MCU as possible. Bypass requirements depend on MCU pin load.

## 1.4 System Clock Description

The clock and reset generator provides the internal clock signals for the core and all peripheral modules. Figure 1-14 shows the clock connections from the CRG to all modules. Consult the CRG Block User Guide for details on clock generation.

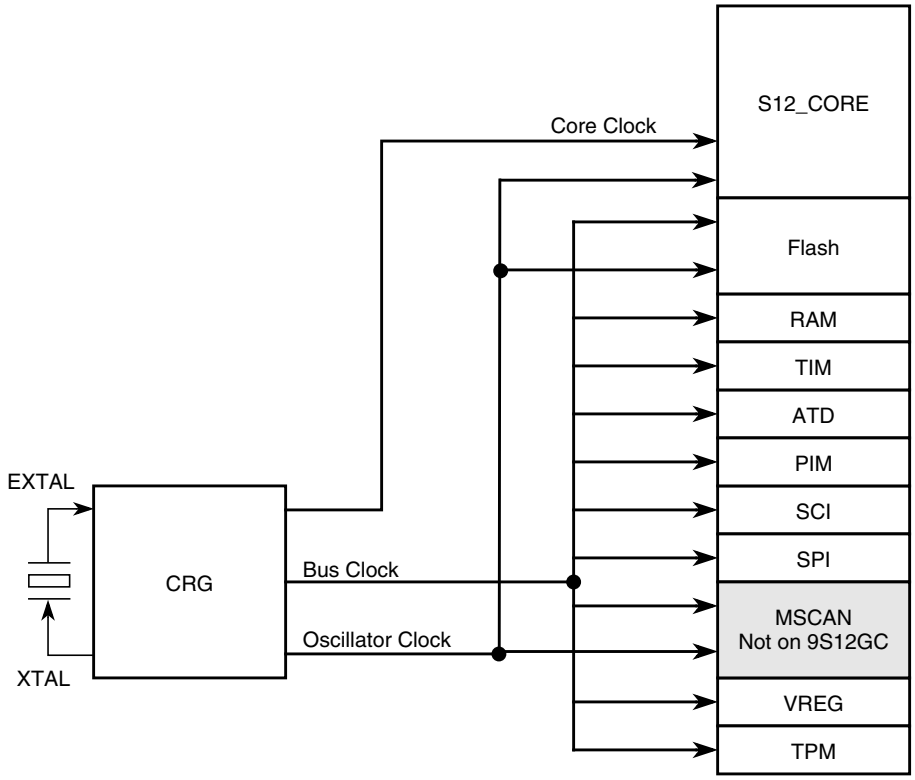


**Figure 1-14. Clock Connections**

## 1.5 Modes of Operation

Eight possible modes determine the device operating configuration. Each mode has an associated default memory map and external bus configuration controlled by a further pin.

Three low power modes exist for the device.

### 1.5.1 Chip Configuration Summary

The operating mode out of reset is determined by the states of the MODC, MODB, and MODA pins during reset. The MODC, MODB, and MODA bits in the MODE register show the current operating mode and provide limited mode switching during operation. The states of the MODC, MODB, and MODA pins are latched into these bits on the rising edge of the reset signal. The ROMCTL signal allows the setting of the ROMON bit in the MISC register thus controlling whether the internal Flash is visible in the memory map. ROMON = 1 mean the Flash is visible in the memory map. The state of the ROMCTL pin is latched into the ROMON bit in the MISC register on the rising edge of the reset signal.

**Table 1-7. Mode Selection**

| BKGD = MODC | PE6 = MODB | PE5 = MODA | PP6 = ROMCTL | ROMON Bit | Mode Description |
|---|---|---|---|---|---|
| 0 | 0 | 0 | X | 1 | Special Single Chip, BDM allowed and ACTIVE. BDM is allowed in all other modes but a serial command is required to make BDM active. |
| 0 | 0 | 1 | 0 | 1 | Emulation Expanded Narrow, BDM allowed |
| | | | 1 | 0 | |
| 0 | 1 | 0 | X | 0 | Special Test (Expanded Wide), BDM allowed |
| 0 | 1 | 1 | 0 | 1 | Emulation Expanded Wide, BDM allowed |
| | | | 1 | 0 | |
| 1 | 0 | 0 | X | 1 | Normal Single Chip, BDM allowed |
| 1 | 0 | 1 | 0 | 0 | Normal Expanded Narrow, BDM allowed |
| | | | 1 | 1 | |
| 1 | 1 | 0 | X | 1 | Peripheral; BDM allowed but bus operations would cause bus conflicts (must not be used) |
| 1 | 1 | 1 | 0 | 0 | Normal Expanded Wide, BDM allowed |
| | | | 1 | 1 | |

For further explanation on the modes refer to the S12_MEBI block guide.

**Table 1-8. Clock Selection Based on PE7**

| PE7 = $\overline{\text{XCLKS}}$ | Description |
|---|---|
| 1 | Colpitts Oscillator selected |
| 0 | Pierce Oscillator/external clock selected |

## 1.5.2 Security

The device will make available a security feature preventing the unauthorized read and write of the memory contents. This feature allows:

- Protection of the contents of FLASH,
- Operation in single-chip mode,
- Operation from external memory with internal FLASH disabled.

The user must be reminded that part of the security must lie with the user's code. An extreme example would be user's code that dumps the contents of the internal program. This code would defeat the purpose of security. At the same time the user may also wish to put a back door in the user's program. An example of this is the user downloads a key through the SCI which allows access to a programming routine that updates parameters.

### 1.5.2.1 Securing the Microcontroller

Once the user has programmed the FLASH, the part can be secured by programming the security bits located in the FLASH module. These non-volatile bits will keep the part secured through resetting the part and through powering down the part.

The security byte resides in a portion of the Flash array.

Check the Flash Block User Guide for more details on the security configuration.

#### 1.5.2.2 Operation of the Secured Microcontroller

##### 1.5.2.2.1 Normal Single Chip Mode

This will be the most common usage of the secured part. Everything will appear the same as if the part was not secured with the exception of BDM operation. The BDM operation will be blocked.

##### 1.5.2.2.2 Executing from External Memory

The user may wish to execute from external space with a secured microcontroller. This is accomplished by resetting directly into expanded mode. The internal FLASH will be disabled. BDM operations will be blocked.

#### 1.5.2.3 Unsecuring the Microcontroller

In order to unsecure the microcontroller, the internal FLASH must be erased. This can be done through an external program in expanded mode or via a sequence of BDM commands. Unsecuring is also possible via the Backdoor Key Access. Refer to Flash Block Guide for details.

Once the user has erased the FLASH, the part can be reset into special single chip mode. This invokes a program that verifies the erasure of the internal FLASH. Once this program completes, the user can erase and program the FLASH security bits to the unsecured state. This is generally done through the BDM, but the user could also change to expanded mode (by writing the mode bits through the BDM) and jumping to an external program (again through BDM commands). Note that if the part goes through a reset before the security bits are reprogrammed to the unsecure state, the part will be secured again.

### 1.5.3 Low-Power Modes

The microcontroller features three main low power modes. Consult the respective Block User Guide for information on the module behavior in stop, pseudo stop, and wait mode. An important source of information about the clock system is the Clock and Reset Generator User Guide (CRG).

#### 1.5.3.1 Stop

Executing the CPU STOP instruction stops all clocks and the oscillator thus putting the chip in fully static mode. Wake up from this mode can be done via reset or external interrupts.

#### 1.5.3.2 Pseudo Stop

This mode is entered by executing the CPU STOP instruction. In this mode the oscillator is still running and the real time interrupt (RTI) or watchdog (COP) sub module can stay active. Other peripherals are turned off. This mode consumes more current than the full stop mode, but the wake up time from this mode is significantly shorter.

#### 1.5.3.3 Wait

This mode is entered by executing the CPU WAI instruction. In this mode the CPU will not execute instructions. The internal CPU signals (address and data bus) will be fully static. All peripherals stay active. For further power consumption reduction the peripherals can individually turn off their local clocks.

#### 1.5.3.4 Run

Although this is not a low-power mode, unused peripheral modules should not be enabled in order to save power.

## 1.6 Resets and Interrupts

Consult the Exception Processing section of the CPU12 Reference Manual for information.

### 1.6.1 Vectors

Table 1-9 lists interrupt sources and vectors in default order of priority.

**Table 1-9. Interrupt Vector Locations**

| Vector Address | Interrupt Source | CCR Mask | Local Enable | HPRIO Value to Elevate |
|---|---|---|---|---|
| 0xFFFE, 0xFFFF | External reset, power on reset, or low voltage reset (see CRG flags register to determine reset source) | None | None | — |
| 0xFFFC, 0xFFFD | Clock monitor fail reset | None | COPCTL (CME, FCME) | — |
| 0xFFFA, 0xFFFB | COP failure reset | None | COP rate select | — |
| 0xFFF8, 0xFFF9 | Unimplemented instruction trap | None | None | — |
| 0xFFF6, 0xFFF7 | SWI | None | None | — |
| 0xFFF4, 0xFFF5 | XIRQ | X-Bit | None | — |
| 0xFFF2, 0xFFF3 | IRQ | I bit | INTCR (IRQEN) | 0x00F2 |
| 0xFFF0, 0xFFF1 | Real time Interrupt | I bit | CRGINT (RTIE) | 0x00F0 |
| 0xFFEE, 0xFFEF | Standard timer channel 0 | I bit | TIE (C0I) | 0x00EE |
| 0xFFEC, 0xFFED | Standard timer channel 1 | I bit | TIE (C1I) | 0x00EC |
| $FFEE, $FFEF | Reserved | | | |
| $FFEC, $FFED | Reserved | | | |
| 0xFFEA, 0xFFEB | Standard timer channel 2 | I bit | TIE (C2I) | 0x00EA |
| 0xFFE8, 0xFFE9 | Standard timer channel 3 | I bit | TIE (C3I) | 0x00E8 |
| 0xFFE6, 0xFFE7 | Standard timer channel 4 | I bit | TIE (C4I) | 0x00E6 |
| 0xFFE4, 0xFFE5 | Standard timer channel 5 | I bit | TIE (C5I) | 0x00E4 |
| 0xFFE2, 0xFFE3 | Standard timer channel 6 | I bit | TIE (C6I) | 0x00E2 |
| 0xFFE0, 0xFFE1 | Standard timer channel 7 | I bit | TIE (C7I) | 0x00E0 |

**Table 1-9. Interrupt Vector Locations (continued)**

| Vector Address | Interrupt Source | CCR Mask | Local Enable | HPRIO Value to Elevate |
|---|---|---|---|---|
| 0xFFDE, 0xFFDF | Standard timer overflow | I bit | TMSK2 (TOI) | 0x00DE |
| 0xFFDC, 0xFFDD | Pulse accumulator A overflow | I bit | PACTL (PAOVI) | 0x00DC |
| 0xFFDA, 0xFFDB | Pulse accumulator input edge | I bit | PACTL (PAI) | 0x00DA |
| 0xFFD8, 0xFFD9 | SPI | I bit | SPICR1 (SPIE, SPTIE) | 0x00D8 |
| 0xFFD6, 0xFFD7 | SCI | I bit | SCICR2 (TIE, TCIE, RIE, ILIE) | 0x00D6 |
| 0xFFD4, 0xFFD5 | Reserved | | | |
| 0xFFD2, 0xFFD3 | ATD | I bit | ATDCTL2 (ASCIE) | 0x00D2 |
| 0xFFD0, 0xFFD1 | Reserved | | | |
| 0xFFCE, 0xFFCF | Port J | I bit | PIEP (PIEP7-6) | 0x00CE |
| 0xFFCC, 0xFFCD | Reserved | | | |
| 0xFFCA, 0xFFCB | Reserved | | | |
| 0xFFC8, 0xFFC9 | Reserved | | | |
| 0xFFC6, 0xFFC7 | CRG PLL lock | I bit | PLLCR (LOCKIE) | 0x00C6 |
| 0xFFC4, 0xFFC5 | CRG self clock mode | I bit | PLLCR (SCMIE) | 0x00C4 |
| 0xFFBA to 0xFFC3 | Reserved | | | |
| 0xFFB8, 0xFFB9 | FLASH | I bit | FCNFG (CCIE, CBEIE) | 0x00B8 |
| 0xFFB6, 0xFFB7 | CAN wake-up[(1)] | I bit | CANRIER (WUPIE) | 0x00B6 |
| 0xFFB4, 0xFFB5 | CAN errors[1] | I bit | CANRIER (CSCIE, OVRIE) | 0x00B4 |
| 0xFFB2, 0xFFB3 | CAN receive[1] | I bit | CANRIER (RXFIE) | 0x00B2 |
| 0xFFB0, 0xFFB1 | CAN transmit[1] | I bit | CANTIER (TXEIE[2:0]) | 0x00B0 |
| 0xFF90 to 0xFFAF | Reserved | | | |
| 0xFF8E, 0xFF8F | Port P | I bit | PIEP (PIEP7-0) | 0x008E |
| 0xFF8C, 0xFF8D | Reserved | | | |
| 0xFF8C, 0xFF8D | PWM Emergency Shutdown | I bit | PWMSDN(PWMIE) | 0x008C |
| 0xFF8A, 0xFF8B | VREG LVI | I bit | CTRL0 (LVIE) | 0x008A |
| 0xFF80 to 0xFF89 | Reserved | | | |

1. Not available on MC9S12GC Family members

### 1.6.2 Resets

Resets are a subset of the interrupts featured in Table 1-9. The different sources capable of generating a system reset are summarized in Table 1-10. When a reset occurs, MCU registers and control bits are changed to known start-up states. Refer to the respective module Block User Guides for register reset states.

#### 1.6.2.1 Reset Summary Table

**Table 1-10. Reset Summary**

| Reset | Priority | Source | Vector |
|---|---|---|---|
| Power-on Reset | 1 | CRG module | 0xFFFE, 0xFFFF |
| External Reset | 1 | $\overline{\text{RESET}}$ pin | 0xFFFE, 0xFFFF |
| Low Voltage Reset | 1 | VREG module | 0xFFFE, 0xFFFF |
| Clock Monitor Reset | 2 | CRG module | 0xFFFC, 0xFFFD |
| COP Watchdog Reset | 3 | CRG module | 0xFFFA, 0xFFFB |

#### 1.6.2.2 Effects of Reset

When a reset occurs, MCU registers and control bits are changed to known start-up states. Refer to the respective module Block User Guides for register reset states. Refer to the HCS12 Multiplexed External Bus Interface (MEBI) Block Guide for mode dependent pin configuration of port A, B and E out of reset.

Refer to the PIM Block User Guide for reset configurations of all peripheral module ports.

Refer to Figure 1-2 to Figure 1-6 footnotes for locations of the memories depending on the operating mode after reset.

The RAM array is not automatically initialized out of reset.

**NOTE**

For devices assembled in 48-pin or 52-pin LQFP packages all non-bonded out pins should be configured as outputs after reset in order to avoid current drawn from floating inputs. Refer to Table 1-5 for affected pins.

## 1.7 Device Specific Information and Module Dependencies

### 1.7.1 PPAGE

External paging is not supported on these devices. In order to access the 16K flash blocks in the address range 0x8000–0xBFFF the PPAGE register must be loaded with the corresponding value for this range. Refer to Table 1-11 for device specific page mapping.

For all devices Flash Page 3F is visible in the 0xC000–0xFFFF range if ROMON is set. For all devices (except MC9S12GC16) Page 3E is also visible in the 0x4000–0x7FFF range if ROMHM is cleared and ROMON is set. For all devices apart from MC9S12C32 Flash Page 3D is visible in the 0x0000–0x3FFF range if ROMON is set...

**Table 1-11. Device Specific Flash PAGE Mapping**

| Device | PAGE | PAGE Visible with PPAGE Contents |
|---|---|---|
| MC9S12GC16 | 3F | $01,$03,$05,$07,$09.....$35,$37,$39,$3B,$3D,$3F |
| MC9S12C32<br>MC9S12GC32 | 3E | $00,$02,$04,$06,$08,$0A,$0C,$0E,$10,$12.....$2C,$2E,$30,$32,$34,$36,$38,$3A,$3C,$3E |
| | 3F | $01,$03,$05,$07,$09,$0B,$0D,$0F,$11,$13.....$2D,$2F,$31,$33,$35,$37,$39,$3B,$3D,$3F |
| MC9S12C64<br>MC9S12GC64 | 3C | $04,$0C,$14,$1C,$24,$2C,$34,$3C |
| | 3D | $05,$0D,$15,$1D,$25,$2D,$35,$3D |
| | 3E | $06,$0E,$16,$1E,$26,$2E,$36,$3E |
| | 3F | $07,$0F,$17,$1F,$27,$2F,$37,$3F |
| MC9S12C96<br>MC9S12GC96 | 3A | $02,$0A,$12,$1A,$22,$2A,$32,$3A |
| | 3B | $03,$0B,$13,$1B,$23,$2B,$33,$3B |
| | 3C | $04,$0C,$14,$1C,$24,$2C,$34,$3C |
| | 3D | $05,$0D,$15,$1D,$25,$2D,$35,$3D |
| | 3E | $06,$0E,$16,$1E,$26,$2E,$36,$3E |
| | 3F | $07,$0F,$17,$1F,$27,$2F,$37,$3F |
| MC9S12C128<br>MC9S12GC128 | 38 | $00,$08,$10,$18,$20,$28,$30,$38 |
| | 39 | $01,$09,$11,$19,$21,$29,$31,$39 |
| | 3A | $02,$0A,$12,$1A,$22,$2A,$32,$3A |
| | 3B | $03,$0B,$13,$1B,$23,$2B,$33,$3B |
| | 3C | $04,$0C,$14,$1C,$24,$2C,$34,$3C |
| | 3D | $05,$0D,$15,$1D,$25,$2D,$35,$3D |
| | 3E | $06,$0E,$16,$1E,$26,$2E,$36,$3E |
| | 3F | $07,$0F,$17,$1F,$27,$2F,$37,$3F |

### 1.7.2 BDM Alternate Clock

The BDM section reference to alternate clock is equivalent to the oscillator clock.

### 1.7.3 Extended Address Range Emulation Implications

In order to emulate the MC9S12GC or MC9S12C-Family / MC9S12GC-Family devices, external addressing of a 128K memory map is required. This is provided in a 112 LQFP package version which includes the 3 necessary extra external address bus signals via PortK[2:0]. This package version is for emulation only and not provided as a general production package.

The reset state of DDRK is 0x0000, configuring the pins as inputs.

The reset state of PUPKE in the PUCR register is “1” enabling the internal Port K pullups.

In this reset state the pull-ups provide a defined state and prevent a floating input, thereby preventing unnecessary current flow at the input stage.

To prevent unnecessary current flow in production package options, the states of DDRK and PUPKE should not be changed by software.

### 1.7.4 VREGEN

The VREGEN input mentioned in the VREG section is device internal, connected internally to $V_{DDR}$.

### 1.7.5 $V_{DD1}$, $V_{DD2}$, $V_{SS1}$, $V_{SS2}$

In the 80-pin QFP package versions, both internal $V_{DD}$ and $V_{SS}$ of the 2.5V domain are bonded out on 2 sides of the device as two pin pairs ($V_{DD1}$, $V_{SS1}$ & $V_{DD2}$, $V_{SS2}$). $V_{DD1}$ and $V_{DD2}$ are connected together internally. $V_{SS1}$ and $V_{SS2}$ are connected together internally. The extra pin pair enables systems using the 80-pin package to employ better supply routing and further decoupling.

### 1.7.6 Clock Reset Generator And VREG Interface

The low voltage reset feature uses the low voltage reset signal from the VREG module as an input to the CRG module. When the regulator output voltage supply to the internal chip logic falls below a specified threshold the LVR signal from the VREG module causes the CRG module to generate a reset.

**NOTE**

If the voltage regulator is shut down by connecting $V_{DDR}$ to ground then the LVRF flag in the CRG flags register (CRGFLG) is undefined.

### 1.7.7 Analog-to-Digital Converter

In the 48- and 52-pin package versions, the $V_{RL}$ pad is bonded internally to the $V_{SSA}$ pin.

### 1.7.8 MODRR Register Port T And Port P Mapping

The MODRR register within the PIM allows for mapping of PWM channels to port T in the absence of port P pins for the low pin count packages. For the 80QFP package option it is recommended not to use MODRR since this is intended to support PWM channel availability in low pin count packages. Note that when mapping PWM channels to port T in an 80QFP option, the associated PWM channels are then mapped to both port P and port T. .

### 1.7.9 Port AD Dependency On PIM And ATD Registers

The port AD pins interface to the PIM module. However, the port pin digital state can be read from either the PORTAD register in the ATD register map or from the PTAD register in the PIM register map.

In order to read a digital pin value from PORTAD the corresponding ATDDIEN bit must be set and the corresponding DDRDA bit cleared. If the corresponding ATDDIEN bit is cleared then the pin is configured as an analog input and the PORTAD bit reads back as "1".

In order to read a digital pin value from PTAD, the corresponding DDRAD bit must be cleared, to configure the pin as an input.

Furthermore in order to use a port AD pin as an analog input, the corresponding DDRAD bit must be cleared to configure the pin as an input

## 1.8 Recommended Printed Circuit Board Layout

The PCB must be carefully laid out to ensure proper operation of the voltage regulator as well as of the MCU itself. The following rules must be observed:

- Every supply pair must be decoupled by a ceramic capacitor connected as near as possible to the corresponding pins.
- Central point of the ground star should be the $V_{SSR}$ pin.
- Use low ohmic low inductance connections between $V_{SS1}$, $V_{SS2}$, and $V_{SSR}$.
- $V_{SSPLL}$ must be directly connected to $V_{SSR}$.
- Keep traces of $V_{SSPLL}$, EXTAL, and XTAL as short as possible and occupied board area for C6, C7, C11, and Q1 as small as possible.
- Do not place other signals or supplies underneath area occupied by C6, C7, C5, and Q1 and the connection area to the MCU.
- Central power input should be fed in at the $V_{DDA}/V_{SSA}$ pins.

**Table 1-12. Recommended Component Values**

| Component | Purpose | Type | Value |
|---|---|---|---|
| C1 | $V_{DD1}$ filter capacitor | Ceramic X7R | 220nF, 470nF[(1)] |
| C2 | $V_{DDR}$ filter capacitor | X7R/tantalum | >=100nF |
| C3 | $V_{DDPLL}$ filter capacitor | Ceramic X7R | 100nF |
| C4 | PLL loop filter capacitor | See PLL specification chapter | |
| C5 | PLL loop filter capacitor | | |
| C6 | OSC load capacitor | See PLL specification chapter | |
| C7 | OSC load capacitor | | |
| C8 | $V_{DD2}$ filter capacitor (80 QFP only) | Ceramic X7R | 220nF |
| C9 | $V_{DDA}$ filter capacitor | Ceramic X7R | 100nF |
| C10 | $V_{DDX}$ filter capacitor | X7R/tantalum | >=100nF |
| C11 | DC cutoff capacitor | Colpitts mode only, if recommended by quartz manufacturer | |
| R1 | Pierce Mode Select Pullup | Pierce Mode Only | |
| R2 | PLL loop filter resistor | See PLL Specification chapter | |
| R3 / $R_B$ | PLL loop filter resistor | Pierce mode only | |
| R4 / $R_S$ | PLL loop filter resistor | | |
| Q1 | Quartz | — | — |

1. In 48LQFP and 52LQFP package versions, $V_{DD2}$ is not available. Thus 470nF must be connected to $V_{DD1}$.

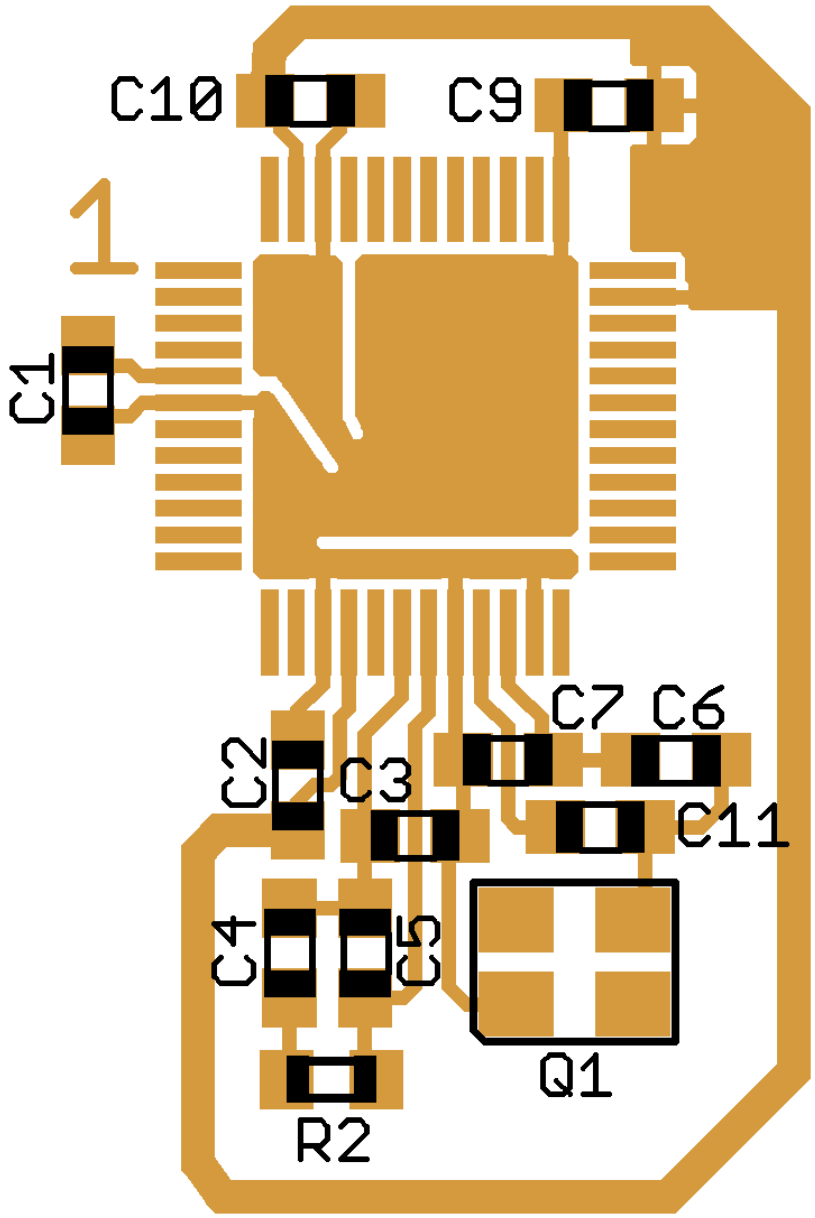


**Figure 1-15. Recommended PCB Layout (48 LQFP) Colpitts Oscillator**

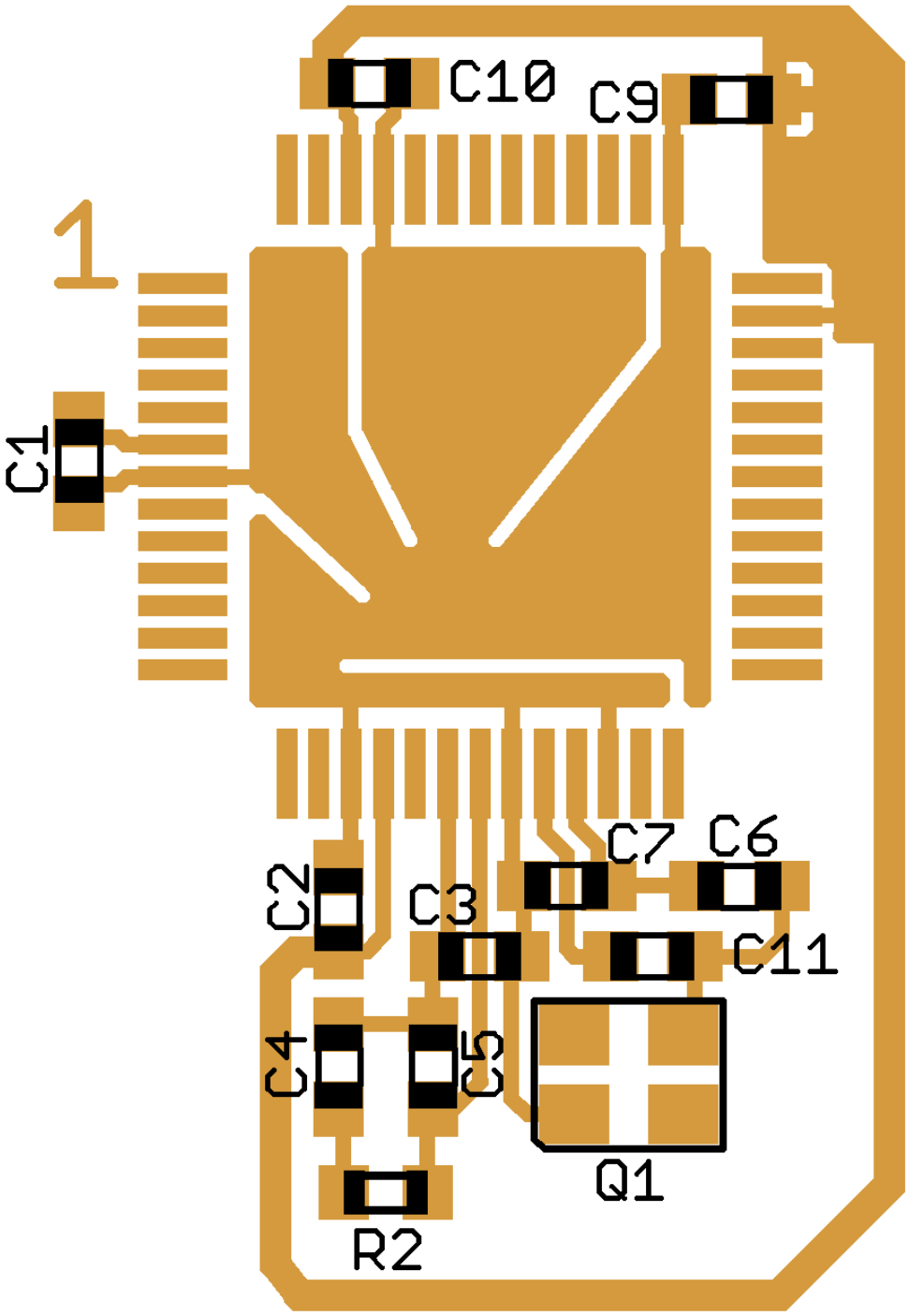


**Figure 1-16. Recommended PCB Layout (52 LQFP) Colpitts Oscillator**

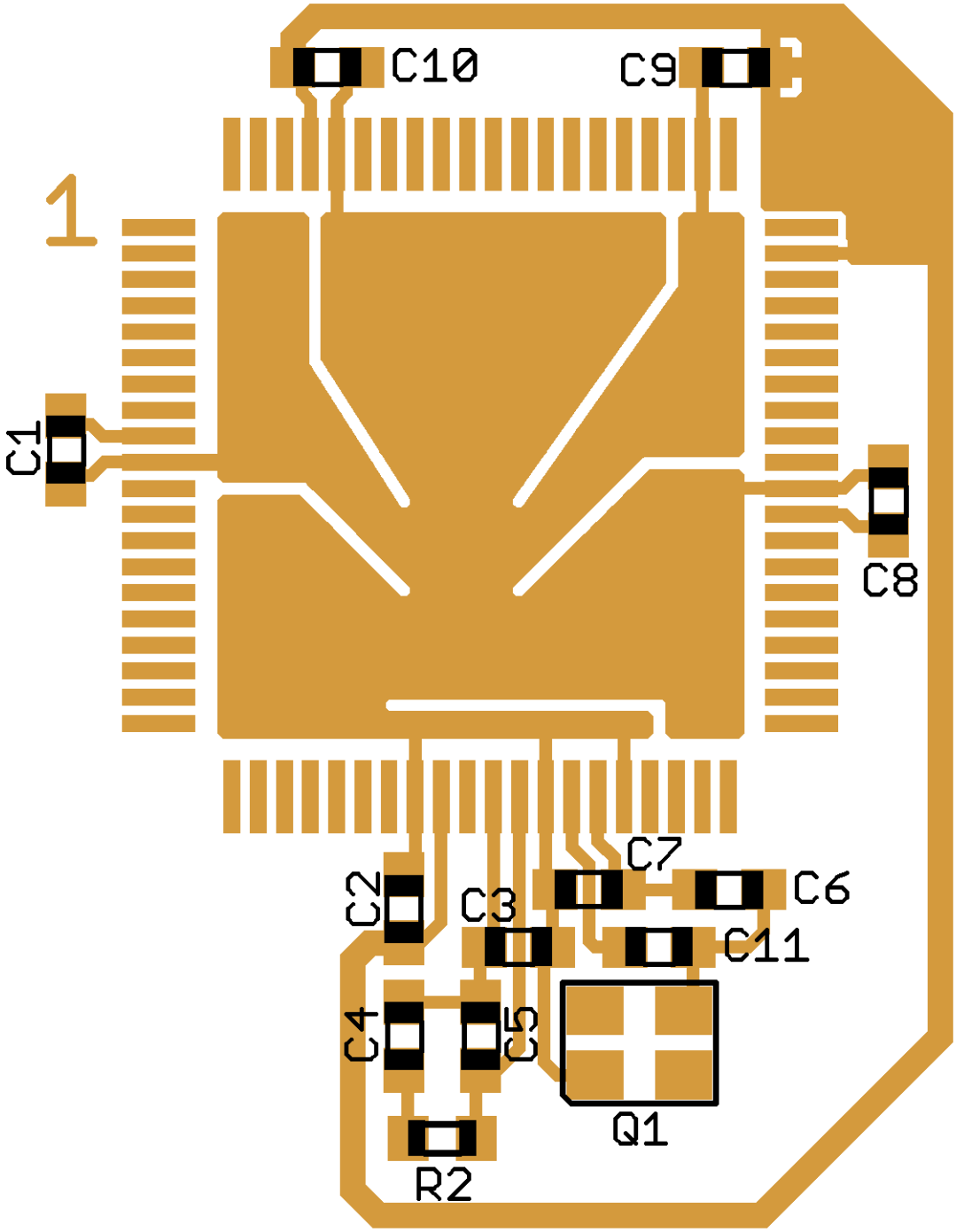


**Figure 1-17. Recommended PCB Layout (80 QFP) Colpitts Oscillator**

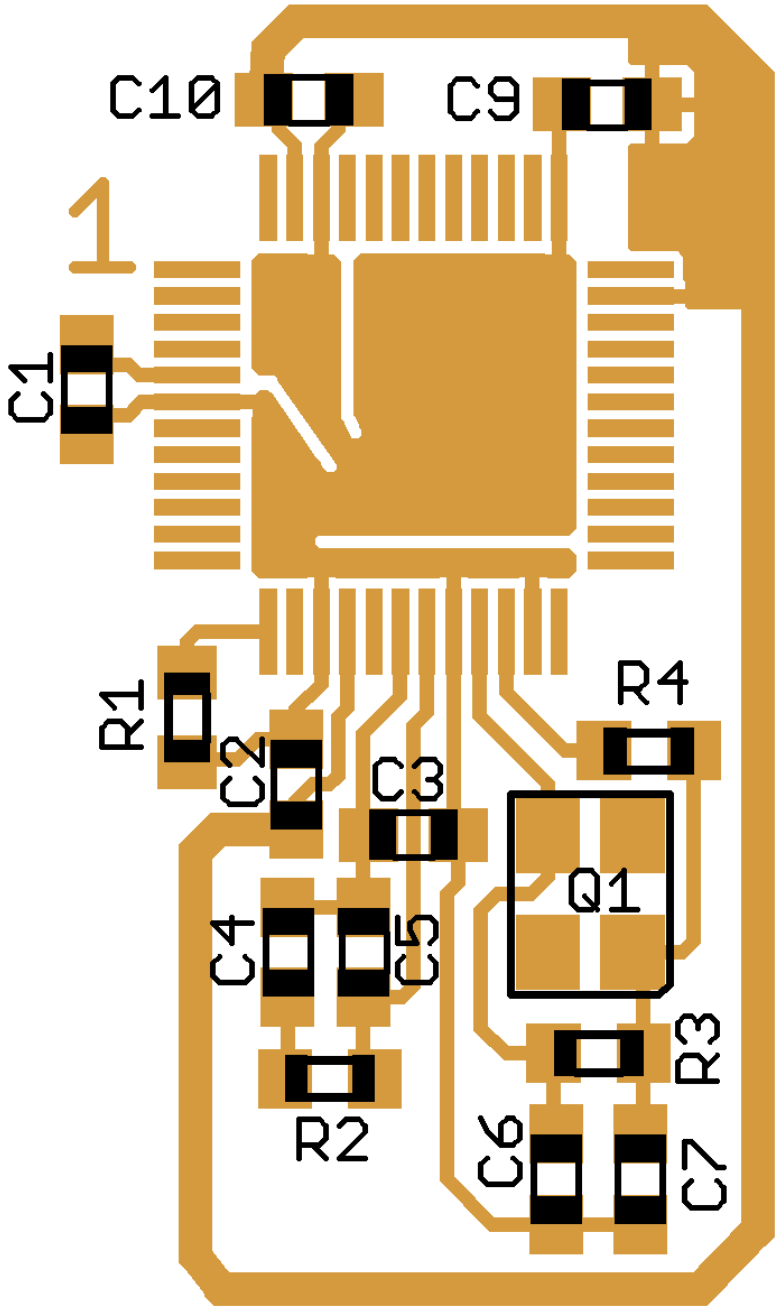


**Figure 1-18. Recommended PCB Layout for 48 LQFP Pierce Oscillator**

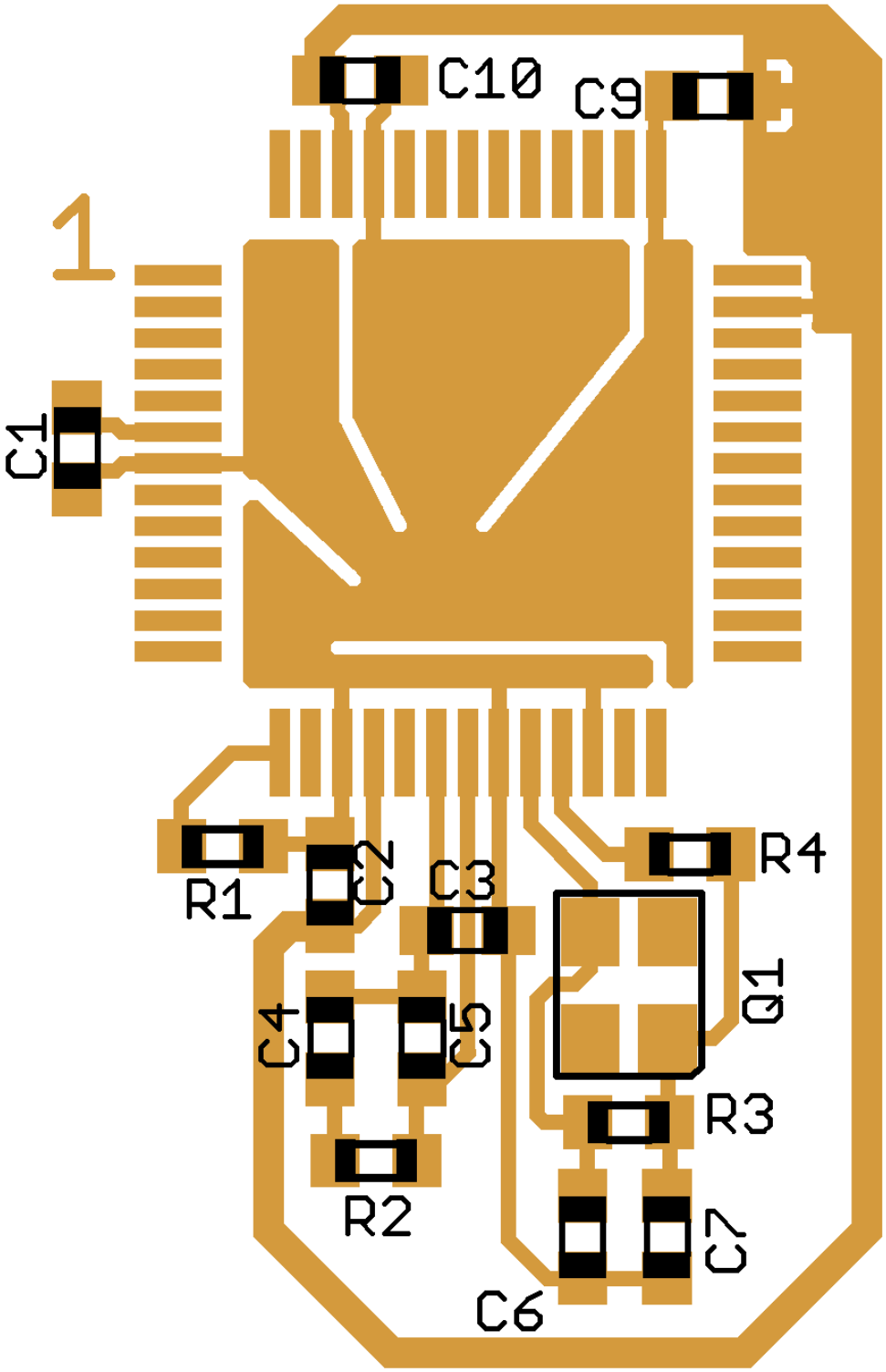


**Figure 1-19. Recommended PCB Layout for 52 LQFP Pierce Oscillator**

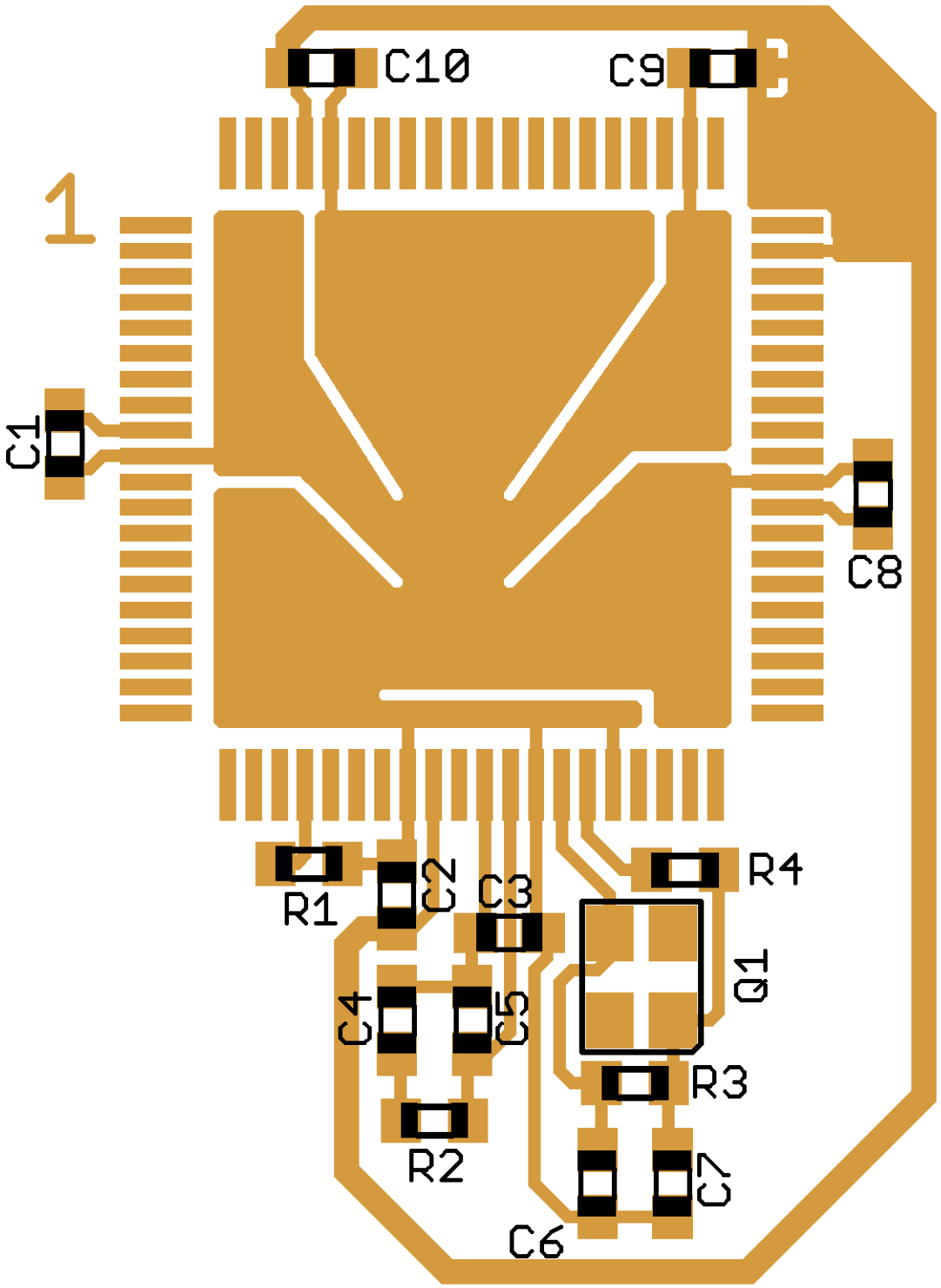


**Figure 1-20. Recommended PCB Layout for 80QFP Pierce Oscillator**

# Chapter 2
# Port Integration Module (PIM9C32) Block Description

## 2.1 Introduction

The Port Integration Module establishes the interface between the peripheral modules and the I/O pins for all ports.

This chapter covers:

- Port A, B, and E related to the core logic and the multiplexed bus interface
- Port T connected to the TIM module (PWM module can be routed to port T as well)
- Port S connected to the SCI module
- Port M associated to the MSCAN and SPI module
- Port P connected to the PWM module, external interrupt sources available
- Port J pins can be used as external interrupt sources and standard I/O's

The following I/O pin configurations can be selected:

- Available on all I/O pins:
  - Input/output selection
  - Drive strength reduction
  - Enable and select of pull resistors
- Available on all Port P and Port J pins:
  - Interrupt enable and status flags

The implementation of the Port Integration Module is device dependent.

### 2.1.1 Features

A standard port has the following minimum features:

- Input/output selection
- 5-V output drive with two selectable drive strength
- 5-V digital and analog input
- Input with selectable pull-up or pull-down device

Optional features:

- Open drain for wired-OR connections
- Interrupt inputs with glitch filtering

### 2.1.2 Block Diagram

Figure 2-1 is a block diagram of the PIM.

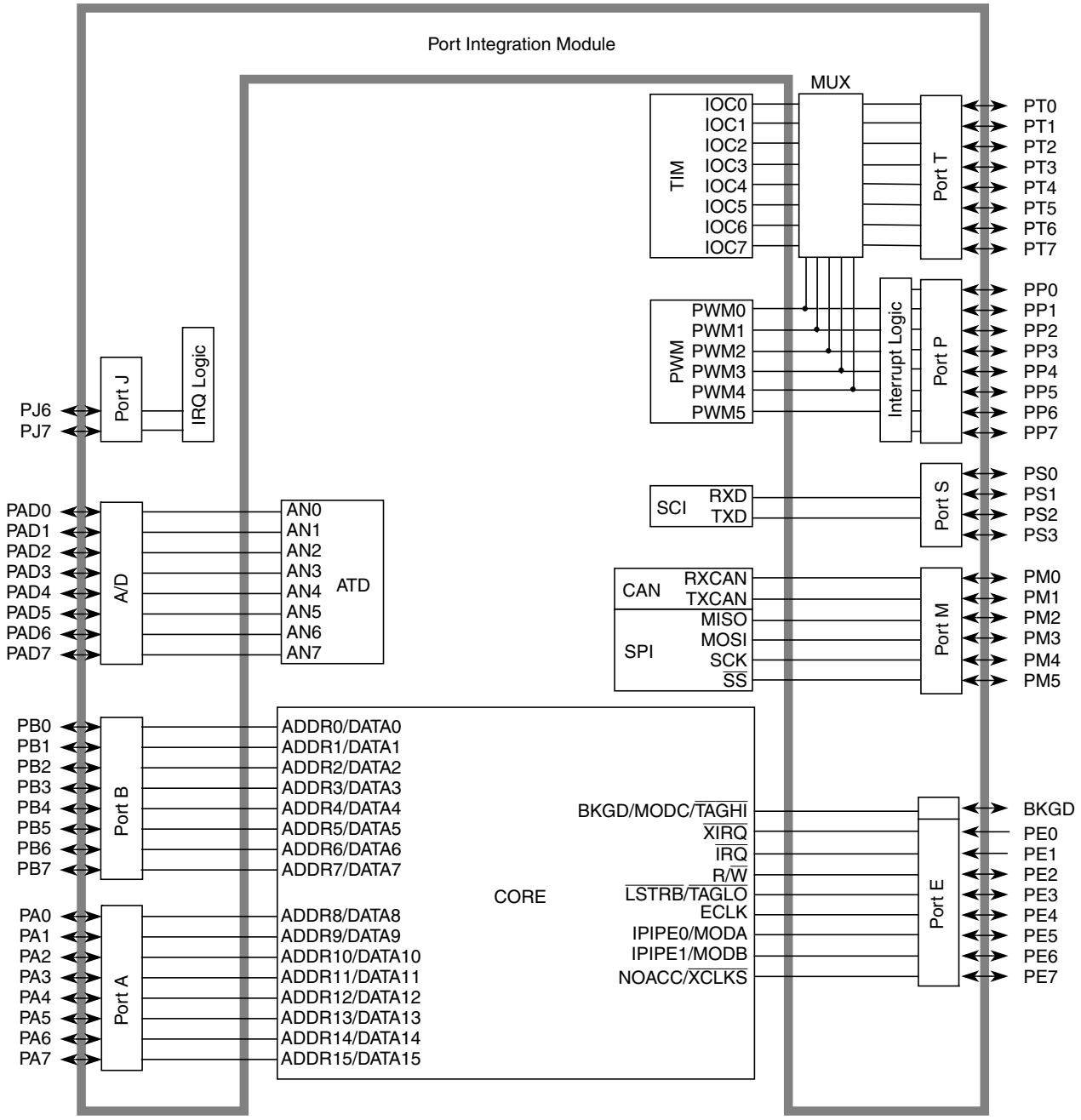


**Figure 2-1. PIM Block Diagram**

Note: The MODRR register within the PIM allows for mapping of PWM channels to Port T in the absence of Port P pins for the low pin count packages. For the 80QFP package option it is recommended not to use MODRR since this is intended to support PWM channel availability in low pin count packages. Note that

when mapping PWM channels to Port T in an 80QFP option, the associated PWM channels are then mapped to both Port P and Port T.

## 2.2 Signal Description

This section lists and describes the signals that do connect off-chip.

Table 2-1 shows all pins and their functions that are controlled by the PIM module. If there is more than one function associated to a pin, the priority is indicated by the position in the table from top (highest priority) to down (lowest priority).

**Table 2-1. Pin Functions and Priorities**

| Port | Pin Name | Pin Function | Description | Pin Function after Reset |
|---|---|---|---|---|
| Port T | PT[7:0] | PWM[4:0] | PWM outputs (only available if enabled in MODRR register) | GPIO |
| | | IOC[7:0] | Standard timer channels | |
| | | GPIO | General-purpose I/O | |
| Port S | PS3 | GPIO | General-purpose I/O | |
| | PS2 | GPIO | General purpose I/O | |
| | PS1 | TXD | Serial communication interface transmit pin | |
| | | GPIO | General-purpose I/O | |
| | PS0 | RXD | Serial communication interface receive pin | |
| | | GPIO | General-purpose I/O | |
| Port M | PM5 | SCK | SPI clock | |
| | PM4 | MOSI | SPI transmit pin | |
| | PM3 | SS | SPI slave select line | |
| | PM2 | MISO | SPI receive pin | |
| | PM1 | TXCAN | MSCAN transmit pin | |
| | PM0 | RXCAN | MSCAN receive pin | |
| Port P | PP[7:0] | PWM[5:0] | PWM outputs | |
| | | GPIO[7:0] | General purpose I/O with interrupt | |
| | PP[6] | ROMON | ROMON input signal | |
| Port J | PJ[7:6] | GPIO | General purpose I/O with interrupt | |
| Port AD | PAD[7:0] | ATD[7:0] | ATD analog inputs | |
| | | GPIO[7:0] | General purpose I/O | |
| Port A | PA[7:0] | ADDR[15:8]/ DATA[15:8]/ GPIO | Refer to MEBI Block Guide. | |
| Port B | PB[7:0] | ADDR[7:0]/ DATA[7:0]/ GPIO | Refer to MEBI Block Guide. | |

**Table 2-1. Pin Functions and Priorities (continued)**

| Port | Pin Name | Pin Function | Description | Pin Function after Reset |
|---|---|---|---|---|
| Port E | PE7 | NOACC/ $\overline{\text{XCLKS}}$/ GPIO | Refer to MEBI Block Guide. | |
| | PE6 | IPIPE1/ MODB/ GPIO | | |
| | PE5 | IPIPE0/ MODA/ GPIO | | |
| | PE4 | ECLK/GPIO | | |
| | PE3 | $\overline{\text{LSTRB}}$/ $\overline{\text{TAGLO}}$/ GPIO | | |
| | PE2 | R/$\overline{\text{W}}$/ GPIO | | |
| | PE1 | $\overline{\text{IRQ}}$/GPI | | |
| | PE0 | $\overline{\text{XIRQ}}$/GPI | | |

## 2.3 Memory Map and Registers

This section provides a detailed description of all registers.

### 2.3.1 Module Memory Map

Figure 2-2 shows the register map of the Port Integration Module.

| Address | Name | | Bit 7 | 6 | 5 | 4 | 3 | 2 | 1 | Bit 0 |
|---|---|---|---|---|---|---|---|---|---|---|
| 0x0000 | PTT | R/W | PTT7 | PTT6 | PTT5 | PTT4 | PTT3 | PTT2 | PTT1 | PTT0 |
| | | TIM | IOC7 | IOC6 | IOC5 | IOC4 | IOC3 | IOC2 | IOC1 | IOC0 |
| | | PWM | | | | PWM4 | PWM3 | PWM2 | PWM1 | PWM0 |
| 0x0001 | PTIT | R | PTIT7 | PTIT6 | PTIT5 | PTIT4 | PTIT3 | PTIT2 | PTIT1 | PTIT0 |
| | | W | | | | | | | | |
| 0x0002 | DDRT | R/W | DDRT7 | DDRT6 | DDRT5 | DDRT4 | DDRT3 | DDRT2 | DDRT1 | DDRT0 |
| 0x0003 | RDRT | R/W | RDRT7 | RDRT6 | RDRT5 | RDRT4 | RDRT3 | RDRT2 | RDRT1 | RDRT0 |
| 0x0004 | PERT | R/W | PERT7 | PERT6 | PERT5 | PERT4 | PERT3 | PERT2 | PERT1 | PERT0 |
| 0x0005 | PPST | R/W | PPST7 | PPST6 | PPST5 | PPST4 | PPST3 | PPST2 | PPST1 | PPST0 |

= Unimplemented or Reserved

**Figure 2-2. Quick Reference to PIM Registers (Sheet 1 of 3)**

| Address | Name | | Bit 7 | 6 | 5 | 4 | 3 | 2 | 1 | Bit 0 |
|---|---|---|---|---|---|---|---|---|---|---|
| 0x0006 | Reserved | R | 0 | 0 | 0 | 0 | 0 | 0 | 0 | 0 |
| | | W | | | | | | | | |
| 0x0007 | MODRR | R | 0 | 0 | 0 | MODRR4 | MODRR3 | MODRR2 | MODRR1 | MODRR0 |
| | | W | | | | | | | | |
| 0x0008 | PTS | R | 0 | 0 | 0 | 0 | PTS3 | PTS2 | PTS1 | PTS0 |
| | | W | | | | | | | | |
| | | SCI | — | — | — | — | — | — | TXD | RXD |
| 0x0009 | PTIS | R | 0 | 0 | 0 | 0 | PTIS3 | PTIS2 | PTIS1 | PTIS0 |
| | | W | | | | | | | | |
| 0x000A | DDRS | R | 0 | 0 | 0 | 0 | DDRS3 | DDRS2 | DDRS1 | DDRS0 |
| | | W | | | | | | | | |
| 0x000B | RDRS | R | 0 | 0 | 0 | 0 | RDRS3 | RDRS2 | RDRS1 | RDRS0 |
| | | W | | | | | | | | |
| 0x000C | PERS | R | 0 | 0 | 0 | 0 | PERS3 | PERS2 | PERS1 | PERS0 |
| | | W | | | | | | | | |
| 0x000D | PPSS | R | 0 | 0 | 0 | 0 | PPSS3 | PPSS2 | PPSS1 | PPSS0 |
| | | W | | | | | | | | |
| 0x000E | WOMS | R | 0 | 0 | 0 | 0 | WOMS3 | WOMS2 | WOMS1 | WOMS0 |
| | | W | | | | | | | | |
| 0x000F | Reserved | R | 0 | 0 | 0 | 0 | 0 | 0 | 0 | 0 |
| | | W | | | | | | | | |
| 0x0010 | PTM | R | 0 | 0 | PTM5 | PTM4 | PTM3 | PTM2 | PTM1 | PTM0 |
| | | W | | | | | | | | |
| | | MSCAN / SPI | — | — | SCK | MOSI | $\overline{SS}$ | MISO | TXCAN | RXCAN |
| 0x0011 | PTIM | R | 0 | 0 | PTIM5 | PTIM4 | PTIM3 | PTIM2 | PTIM1 | PTIM0 |
| | | W | | | | | | | | |
| 0x0012 | DDRM | R | 0 | 0 | DDRM5 | DDRM4 | DDRM3 | DDRM2 | DDRM1 | DDRM0 |
| | | W | | | | | | | | |
| 0x0013 | RDRM | R | 0 | 0 | RDRM5 | RDRM4 | RDRM3 | RDRM2 | RDRM1 | RDRM0 |
| | | W | | | | | | | | |
| 0x0014 | PERM | R | 0 | 0 | PERM5 | PERM4 | PERM3 | PERM2 | PERM1 | PERM0 |
| | | W | | | | | | | | |
| 0x0015 | PPSM | R | 0 | 0 | PPSM5 | PPSM4 | PPSM3 | PPSM2 | PPSM1 | PPSM0 |
| | | W | | | | | | | | |
| 0x0016 | WOMM | R | 0 | 0 | WOMM5 | WOMM4 | WOMM3 | WOMM2 | WOMM1 | WOMM0 |
| | | W | | | | | | | | |
| 0x0017 | Reserved | R | 0 | 0 | 0 | 0 | 0 | 0 | 0 | 0 |
| | | W | | | | | | | | |
| 0x0018 | PTP | R | PTP7 | PTP6 | PTP5 | PTP4 | PTP3 | PTP2 | PTP1 | PTP0 |
| | | W | | | | | | | | |
| | | PWM | — | — | PWM5 | PWM4 | PWM3 | PWM2 | PWM1 | PWM0 |
| 0x0019 | PTIP | R | PTIP7 | PTIP6 | PTIP5 | PTIP4 | PTIP3 | PTIP2 | PTIP1 | PTIP0 |
| | | W | | | | | | | | |

= Unimplemented or Reserved

**Figure 2-2. Quick Reference to PIM Registers (Sheet 2 of 3)**

| Address | Name | | Bit 7 | 6 | 5 | 4 | 3 | 2 | 1 | Bit 0 |
|---|---|---|---|---|---|---|---|---|---|---|
| 0x001A | DDRP | R/W | DDRP7 | DDRP6 | DDRP5 | DDRP4 | DDRP3 | DDRP2 | DDRP1 | DDRP0 |
| 0x001B | RDRP | R/W | RDRP7 | RDRP6 | RDRP5 | RDRP4 | RDRP3 | RDRP2 | RDRP1 | RDRP0 |
| 0x001C | PERP | R/W | PERP7 | PERP6 | PERP5 | PERP4 | PERP3 | PERP2 | PERP1 | PERP0 |
| 0x001D | PPSP | R/W | PPSP7 | PPSP6 | PPSP5 | PPSP4 | PPSP3 | PPSP2 | PPSP1 | PPSP0 |
| 0x001E | PIEP | R/W | PIEP7 | PIEP6 | PIEP5 | PIEP4 | PIEP3 | PIEP2 | PIEP1 | PIEP0 |
| 0x001F | PIFP | R/W | PIFP7 | PIFP6 | PIFP5 | PIFP4 | PIFP3 | PIFP2 | PIFP1 | PIFP0 |
| 0x0020–0x0027 | Reserved | R | 0 | 0 | 0 | 0 | 0 | 0 | 0 | 0 |
| | | W | | | | | | | | |
| 0x0028 | PTJ | R | PTJ7 | PTJ6 | 0 | 0 | 0 | 0 | 0 | 0 |
| | | W | | | | | | | | |
| 0x0029 | PTIJ | R | PTIJ7 | PTIJ6 | 0 | 0 | 0 | 0 | 0 | 0 |
| | | W | | | | | | | | |
| 0x002A | DDRJ | R | DDRJ7 | DDRJ6 | 0 | 0 | 0 | 0 | 0 | 0 |
| | | W | | | | | | | | |
| 0x002B | RDRJ | R | RDRJ7 | RDRJ6 | 0 | 0 | 0 | 0 | 0 | 0 |
| | | W | | | | | | | | |
| 0x002C | PERJ | R | PERJ7 | PERJ6 | 0 | 0 | 0 | 0 | 0 | 0 |
| | | W | | | | | | | | |
| 0x002D | PPSJ | R | PPSJ7 | PPSJ6 | 0 | 0 | 0 | 0 | 0 | 0 |
| | | W | | | | | | | | |
| 0x002E | PIEJ | R | PIEJ7 | PIEJ6 | 0 | 0 | 0 | 0 | 0 | 0 |
| | | W | | | | | | | | |
| 0x002F | PIFJ | R | PIFJ7 | PIFJ6 | 0 | 0 | 0 | 0 | 0 | 0 |
| | | W | | | | | | | | |
| 0x0030 | PTAD | R/W | PTAD7 | PTAD6 | PTAD5 | PTAD4 | PTAD3 | PTAD2 | PTAD1 | PTAD0 |
| 0x0031 | PTIAD | R | PTIAD7 | PTIAD6 | PTIAD5 | PTIAD4 | PTIAD3 | PTIAD2 | PTIAD1 | PTIAD0 |
| | | W | | | | | | | | |
| 0x0032 | DDRAD | R/W | DDRAD7 | DDRAD6 | DDRAD5 | DDRAD4 | DDRAD3 | DDRAD2 | DDRAD1 | DDRAD0 |
| 0x0033 | RDRAD | R/W | RDRAD7 | RDRAD6 | RDRAD5 | RDRAD4 | RDRAD3 | RDRAD2 | RDRAD1 | RDRAD0 |
| 0x0034 | PERAD | R/W | PERAD7 | PERAD6 | PERAD5 | PERAD4 | PERAD3 | PERAD2 | PERAD1 | PERAD0 |
| 0x0035 | PPSAD | R/W | PPSAD7 | PPSAD6 | PPSAD5 | PPSAD4 | PPSAD3 | PPSAD2 | PPSAD1 | PPSAD0 |
| 0x0036–0x003F | Reserved | R | 0 | 0 | 0 | 0 | 0 | 0 | 0 | 0 |
| | | W | | | | | | | | |

= Unimplemented or Reserved

**Figure 2-2. Quick Reference to PIM Registers (Sheet 3 of 3)**

### 2.3.2 Register Descriptions

Table 2-2 summarizes the effect on the various configuration bits — data direction (DDR), input/output level (I/O), reduced drive (RDR), pull enable (PE), pull select (PS), and interrupt enable (IE) for the ports. The configuration bit PS is used for two purposes:

1. Configure the sensitive interrupt edge (rising or falling), if interrupt is enabled.
2. Select either a pull-up or pull-down device if PE is active.

**Table 2-2. Pin Configuration Summary**

| DDR | IO | RDR | PE | PS | IE[1] | Function | Pull Device | Interrupt |
|---|---|---|---|---|---|---|---|---|
| 0 | X | X | 0 | X | 0 | Input | Disabled | Disabled |
| 0 | X | X | 1 | 0 | 0 | Input | Pull up | Disabled |
| 0 | X | X | 1 | 1 | 0 | Input | Pull down | Disabled |
| 0 | X | X | 0 | 0 | 1 | Input | Disabled | Falling edge |
| 0 | X | X | 0 | 1 | 1 | Input | Disabled | Rising edge |
| 0 | X | X | 1 | 0 | 1 | Input | Pull up | Falling edge |
| 0 | X | X | 1 | 1 | 1 | Input | Pull down | rising edge |
| 1 | 0 | 0 | X | X | 0 | Output, full drive to 0 | Disabled | Disabled |
| 1 | 1 | 0 | X | X | 0 | Output, full drive to 1 | Disabled | Disabled |
| 1 | 0 | 1 | X | X | 0 | Output, reduced drive to 0 | Disabled | Disabled |
| 1 | 1 | 1 | X | X | 0 | Output, reduced drive to 1 | Disabled | Disabled |
| 1 | 0 | 0 | X | 0 | 1 | Output, full drive to 0 | Disabled | Falling edge |
| 1 | 1 | 0 | X | 1 | 1 | Output, full drive to 1 | Disabled | Rising edge |
| 1 | 0 | 1 | X | 0 | 1 | Output, reduced drive to 0 | Disabled | Falling edge |
| 1 | 1 | 1 | X | 1 | 1 | Output, reduced drive to 1 | Disabled | Rising edge |

1. Applicable only on ports P and J.

**NOTE**

All bits of all registers in this module are completely synchronous to internal clocks during a register read.

### 2.3.2.1 Port T Registers

#### 2.3.2.1.1 Port T I/O Register (PTT)

Module Base + 0x0000

| | 7 | 6 | 5 | 4 | 3 | 2 | 1 | 0 |
|---|---|---|---|---|---|---|---|---|
| R/W | PTT7 | PTT6 | PTT5 | PTT4 | PTT3 | PTT2 | PTT1 | PTT0 |
| TIM | IOC7 | IOC6 | IOC5 | IOC4 | IOC3 | IOC2 | IOC1 | IOC0 |
| PWM | | | | PWM4 | PWM3 | PWM2 | PWM1 | PWM0 |
| Reset | 0 | 0 | 0 | 0 | 0 | 0 | 0 | 0 |

= Unimplemented or Reserved

**Figure 2-3. Port T I/O Register (PTT)**

Read: Anytime.

Write: Anytime.

If the data direction bits of the associated I/O pins are set to 1, a read returns the value of the port register, otherwise the value at the pins is read.

If a TIM-channel is defined as output, the related port T is assigned to IOC function.

In addition to the possible timer functionality of port T pins PWM channels can be routed to port T. For this the Module Routing Register (MODRR) needs to be configured.

**Table 2-3. Port T[4:0] Pin Functionality Configurations(1)**

| MODRR[x] | PWME[x] | TIMEN[x] (2) | Port T[x] Output |
|---|---|---|---|
| 0 | 0 | 0 | General Purpose I/O |
| 0 | 0 | 1 | Timer |
| 0 | 1 | 0 | General Purpose I/O |
| 0 | 1 | 1 | Timer |
| 1 | 0 | 0 | General Purpose I/O |
| 1 | 0 | 1 | Timer |
| 1 | 1 | 0 | PWM |
| 1 | 1 | 1 | PWM |

1. All fields in the that are not shaded are standard use cases.
2. TIMEN[x] means that the timer is enabled (TSCR1[7]), the related channel is configured for output compare function (TIOS[x] or special output on a timer overflow event — configurable in TTOV[x]) and the timer output is routed to the port pin (TCTL1/TCTL2).

#### 2.3.2.1.2 Port T Input Register (PTIT)

Module Base + 0x0001

| | 7 | 6 | 5 | 4 | 3 | 2 | 1 | 0 |
|---|---|---|---|---|---|---|---|---|
| R | PTIT7 | PTIT6 | PTIT5 | PTIT4 | PTIT3 | PTIT2 | PTIT1 | PTIT0 |
| W | | | | | | | | |
| Reset | — | — | — | — | — | — | — | — |

= Unimplemented or Reserved

**Figure 2-4. Port T Input Register (PTIT)**

Read: Anytime.

Write: Never, writes to this register have no effect.

**Table 2-4. PTIT Field Descriptions**

| Field | Description |
|---|---|
| 7–0<br>PTIT[7:0] | **Port T Input Register** — This register always reads back the status of the associated pins. This can also be used to detect overload or short circuit conditions on output pins. |

#### 2.3.2.1.3 Port T Data Direction Register (DDRT)

Module Base + 0x0002

| | 7 | 6 | 5 | 4 | 3 | 2 | 1 | 0 |
|---|---|---|---|---|---|---|---|---|
| R<br>W | DDRT7 | DDRT6 | DDRT5 | DDRT4 | DDRT3 | DDRT2 | DDRT1 | DDRT0 |
| Reset | 0 | 0 | 0 | 0 | 0 | 0 | 0 | 0 |

**Figure 2-5. Port T Data Direction Register (DDRT)**

Read: Anytime.

Write: Anytime.

**Table 2-5. DDRT Field Descriptions**

| Field | Description |
|---|---|
| 7–0<br>DDRT[7:0] | **Data Direction Port T** — This register configures each port T pin as either input or output.<br>The standard TIM / PWM modules forces the I/O state to be an output for each standard TIM / PWM module port associated with an enabled output compare. In these cases the data direction bits will not change.<br>The DDRT bits revert to controlling the I/O direction of a pin when the associated timer output compare is disabled.<br>The timer input capture always monitors the state of the pin.<br>0 Associated pin is configured as input.<br>1 Associated pin is configured as output.<br>**Note:** Due to internal synchronization circuits, it can take up to 2 bus cycles until the correct value is read on PTT or PTIT registers, when changing the DDRT register. |

#### 2.3.2.1.4 Port T Reduced Drive Register (RDRT)

Module Base + 0x0003

| | 7 | 6 | 5 | 4 | 3 | 2 | 1 | 0 |
|---|---|---|---|---|---|---|---|---|
| R<br>W | RDRT7 | RDRT6 | RDRT5 | RDRT4 | RDRT3 | RDRT2 | RDRT1 | RDRT0 |
| Reset | 0 | 0 | 0 | 0 | 0 | 0 | 0 | 0 |

**Figure 2-6. Port T Reduced Drive Register (RDRT)**

Read: Anytime.

Write: Anytime.

**Table 2-6. RDRT Field Descriptions**

| Field | Description |
|---|---|
| 7–0<br>RDRT[7:0] | **Reduced Drive Port T** — This register configures the drive strength of each port T output pin as either full or reduced. If the port is used as input this bit is ignored.<br>0 Full drive strength at output.<br>1 Associated pin drives at about 1/3 of the full drive strength. |

#### 2.3.2.1.5 Port T Pull Device Enable Register (PERT)

Module Base + 0x0004

| | 7 | 6 | 5 | 4 | 3 | 2 | 1 | 0 |
|---|---|---|---|---|---|---|---|---|
| R<br>W | PERT7 | PERT6 | PERT5 | PERT4 | PERT3 | PERT2 | PERT1 | PERT0 |
| Reset | 0 | 0 | 0 | 0 | 0 | 0 | 0 | 0 |

**Figure 2-7. Port T Pull Device Enable Register (PERT)**

Read: Anytime.

Write: Anytime.

**Table 2-7. PERT Field Descriptions**

| Field | Description |
|---|---|
| 7–0<br>PERT[7:0] | **Pull Device Enable** — This register configures whether a pull-up or a pull-down device is activated, if the port is used as input. This bit has no effect if the port is used as output. Out of reset no pull device is enabled.<br>0 Pull-up or pull-down device is disabled.<br>1 Either a pull-up or pull-down device is enabled. |

### 2.3.2.1.6 Port T Polarity Select Register (PTTST)

Module Base + 0x0005

| | 7 | 6 | 5 | 4 | 3 | 2 | 1 | 0 |
|---|---|---|---|---|---|---|---|---|
| R/W | PPST7 | PPST6 | PPST5 | PPST4 | PPST3 | PPST2 | PPST1 | PPST0 |
| Reset | 0 | 0 | 0 | 0 | 0 | 0 | 0 | 0 |

**Figure 2-8. Port T Polarity Select Register (PPST)**

Read: Anytime.

Write: Anytime.

**Table 2-8. PPST Field Descriptions**

| Field | Description |
|---|---|
| 7–0<br>PPST[7:0] | **Pull Select Port T** — This register selects whether a pull-down or a pull-up device is connected to the pin.<br>0 A pull-up device is connected to the associated port T pin, if enabled by the associated bit in register PERT and if the port is used as input.<br>1 A pull-down device is connected to the associated port T pin, if enabled by the associated bit in register PERT and if the port is used as input. |

### 2.3.2.1.7 Port T Module Routing Register (MODRR)

Module Base + 0x0007

| | 7 | 6 | 5 | 4 | 3 | 2 | 1 | 0 |
|---|---|---|---|---|---|---|---|---|
| R | 0 | 0 | 0 | MODRR4 | MODRR3 | MODRR2 | MODRR1 | MODRR0 |
| W | | | | | | | | |
| Reset | — | — | — | 0 | 0 | 0 | 0 | 0 |

= Unimplemented or Reserved

**Figure 2-9. Port T Module Routing Register (MODRR)**

Read: Anytime.

Write: Anytime.

**NOTE**

MODRR[4] must be kept clear on devices featuring a 4 channel PWM.

**Table 2-9. MODRR Field Descriptions**

| Field | Description |
|---|---|
| 4–0<br>MODRR[4:0] | **Module Routing Register Port T** — This register selects the module connected to port T.<br>0 Associated pin is connected to TIM module<br>1 Associated pin is connected to PWM module |

### 2.3.2.2 Port S Registers

#### 2.3.2.2.1 Port S I/O Register (PTS)

Module Base + 0x0008

| | 7 | 6 | 5 | 4 | 3 | 2 | 1 | 0 |
|---|---|---|---|---|---|---|---|---|
| R | 0 | 0 | 0 | 0 | PTS3 | PTS2 | PTS1 | PTS0 |
| W | | | | | | | | |
| SCI | — | — | — | — | — | — | TXD | RXD |
| Reset | 0 | 0 | 0 | 0 | 0 | 0 | 0 | 0 |

= Unimplemented or Reserved

**Figure 2-10. Port S I/O Register (PTS)**

Read: Anytime.

Write: Anytime.

If the data direction bits of the associated I/O pins are set to 1, a read returns the value of the port register, otherwise the value at the pins is read.

The SCI port associated with transmit pin 1 is configured as output if the transmitter is enabled and the SCI pin associated with receive pin 0 is configured as input if the receiver is enabled. *Please refer to SCI Block User Guide for details*.

#### 2.3.2.2.2 Port S Input Register (PTIS)

Module Base + 0x0009

| | 7 | 6 | 5 | 4 | 3 | 2 | 1 | 0 |
|---|---|---|---|---|---|---|---|---|
| R | 0 | 0 | 0 | 0 | PTIS3 | PTIS2 | PTIS1 | PTIS0 |
| W | | | | | | | | |
| Reset | 0 | 0 | 0 | 0 | 0 | 0 | 0 | 0 |

= Unimplemented or Reserved

**Figure 2-11. Port S Input Register (PTIS)**

Read: Anytime.

Write: Never, writes to this register have no effect.

**Table 2-10. PTIS Field Descriptions**

| Field | Description |
|---|---|
| 3–0<br>PTIS[3:0] | **Port S Input Register** — This register always reads back the status of the associated pins. This also can be used to detect overload or short circuit conditions on output pins. |

### 2.3.2.2.3 Port S Data Direction Register (DDRS)

Module Base + 0x000A

| | 7 | 6 | 5 | 4 | 3 | 2 | 1 | 0 |
|---|---|---|---|---|---|---|---|---|
| R | 0 | 0 | 0 | 0 | DDRS3 | DDRS2 | DDRS1 | DDRS0 |
| W | | | | | | | | |
| Reset | 0 | 0 | 0 | 0 | 0 | 0 | 0 | 0 |

= Unimplemented or Reserved

**Figure 2-12. Port S Data Direction Register (DDRS)**

Read: Anytime.

Write: Anytime.

**Table 2-11. DDRS Field Descriptions**

| Field | Description |
|---|---|
| 3–0<br>DDRS[3:0] | **Direction Register Port S** — This register configures each port S pin as either input or output.<br>If the associated SCI transmit or receive channel is enabled this register has no effect on the pins. The pin is forced to be an output if the SCI transmit channel is enabled, it is forced to be an input if the SCI receive channel is enabled.<br>The DDRS bits revert to controlling the I/O direction of a pin when the associated channel is disabled.<br>0 Associated pin is configured as input.<br>1 Associated pin is configured as output.<br>**Note:** Due to internal synchronization circuits, it can take up to 2 bus cycles until the correct value is read on PTS or PTIS registers, when changing the DDRS register. |

#### 2.3.2.2.4 Port S Reduced Drive Register (RDRS)

Module Base + 0x000B

| | 7 | 6 | 5 | 4 | 3 | 2 | 1 | 0 |
|---|---|---|---|---|---|---|---|---|
| R | 0 | 0 | 0 | 0 | RDRS3 | RDRS2 | RDRS1 | RDRS0 |
| W | | | | | | | | |
| Reset | 0 | 0 | 0 | 0 | 0 | 0 | 0 | 0 |

= Unimplemented or Reserved

**Figure 2-13. Port S Reduced Drive Register (RDRS)**

Read: Anytime.

Write: Anytime.

**Table 2-12. RDRS Field Descriptions**

| Field | Description |
|---|---|
| 3–0<br>RDRS[3:0] | **Reduced Drive Port S** — This register configures the drive strength of each port S output pin as either full or reduced. If the port is used as input this bit is ignored.<br>0 Full drive strength at output.<br>1 Associated pin drives at about 1/3 of the full drive strength. |

#### 2.3.2.2.5 Port S Pull Device Enable Register (PERS)

Module Base + 0x000C

| | 7 | 6 | 5 | 4 | 3 | 2 | 1 | 0 |
|---|---|---|---|---|---|---|---|---|
| R | 0 | 0 | 0 | 0 | PERS3 | PERS2 | PERS1 | PERS0 |
| W | | | | | | | | |
| Reset | 0 | 0 | 0 | 0 | 1 | 1 | 1 | 1 |

= Unimplemented or Reserved

**Figure 2-14. Port S Pull Device Enable Register (PERS)**

Read: Anytime.

Write: Anytime.

**Table 2-13. PERS Field Descriptions**

| Field | Description |
|---|---|
| 3–0<br>PERS[3:0] | **Reduced Drive Port S** — This register configures whether a pull-up or a pull-down device is activated, if the port is used as input or as output in wired-or (open drain) mode. This bit has no effect if the port is used as push-pull output. Out of reset a pull-up device is enabled.<br>0 Pull-up or pull-down device is disabled.<br>1 Either a pull-up or pull-down device is enabled. |

### 2.3.2.2.6 Port S Polarity Select Register (PPSS)

Module Base + 0x000D

| | 7 | 6 | 5 | 4 | 3 | 2 | 1 | 0 |
|---|---|---|---|---|---|---|---|---|
| R | 0 | 0 | 0 | 0 | PPSS3 | PPSS2 | PPSS1 | PPSS0 |
| W | | | | | | | | |
| Reset | 0 | 0 | 0 | 0 | 0 | 0 | 0 | 0 |

= Unimplemented or Reserved

**Figure 2-15. Port S Polarity Select Register (PPSS)**

Read: Anytime.

Write: Anytime.

**Table 2-14. PPSS Field Descriptions**

| Field | Description |
|---|---|
| 3–0<br>PPSS[3:0] | **Pull Select Port S** — This register selects whether a pull-down or a pull-up device is connected to the pin.<br>0 A pull-up device is connected to the associated port S pin, if enabled by the associated bit in register PERS and if the port is used as input or as wired-or output.<br>1 A pull-down device is connected to the associated port S pin, if enabled by the associated bit in register PERS and if the port is used as input. |

### 2.3.2.2.7 Port S Wired-OR Mode Register (WOMS)

Module Base + 0x000E

| | 7 | 6 | 5 | 4 | 3 | 2 | 1 | 0 |
|---|---|---|---|---|---|---|---|---|
| R | 0 | 0 | 0 | 0 | WOMS3 | WOMS2 | WOMS1 | WOMS0 |
| W | | | | | | | | |
| Reset | 0 | 0 | 0 | 0 | 0 | 0 | 0 | 0 |

= Unimplemented or Reserved

**Figure 2-16. Port S Wired-Or Mode Register (WOMS)**

Read: Anytime.

Write: Anytime.

**Table 2-15. WOMS Field Descriptions**

| Field | Description |
|---|---|
| 3–0<br>WOMS[3:0] | **Wired-OR Mode Port S** — This register configures the output pins as wired-or. If enabled the output is driven active low only (open-drain). A logic level of “1” is not driven. This bit has no influence on pins used as inputs.<br>0 Output buffers operate as push-pull outputs.<br>1 Output buffers operate as open-drain outputs. |

### 2.3.2.3 Port M Registers

#### 2.3.2.3.1 Port M I/O Register (PTM)

Module Base + 0x0010

| | 7 | 6 | 5 | 4 | 3 | 2 | 1 | 0 |
|---|---|---|---|---|---|---|---|---|
| R | 0 | 0 | PTM5 | PTM4 | PTM3 | PTM2 | PTM1 | PTM0 |
| W | | | | | | | | |
| MSCAN/ SPI | — | — | SCK | MOSI | $\overline{SS}$ | MISO | TXCAN | RXCAN |
| Reset | 0 | 0 | 0 | 0 | 0 | 0 | 0 | 0 |

= Unimplemented or Reserved

**Figure 2-17. Port M I/O Register (PTM)**

Read: Anytime.

Write: Anytime.

If the data direction bits of the associated I/O pins are set to 1, a read returns the value of the port register, otherwise the value at the pins is read.

The SPI pin configurations (PM[5:2]) is determined by several status bits in the SPI module. *Please refer to the SPI Block User Guide for details*.

#### 2.3.2.3.2 Port M Input Register (PTIM)

Module Base + 0x0011

| | 7 | 6 | 5 | 4 | 3 | 2 | 1 | 0 |
|---|---|---|---|---|---|---|---|---|
| R | 0 | 0 | PTIM5 | PTIM4 | PTIM3 | PTIM2 | PTIM1 | PTIM0 |
| W | | | | | | | | |
| Reset | — | — | — | — | — | — | — | — |

= Unimplemented or Reserved

**Figure 2-18. Port M Input Register (PTIM)**

Read: Anytime.

Write: Never, writes to this register have no effect.

**Table 2-16. PTIM Field Descriptions**

| Field | Description |
|---|---|
| 5–0 PTIM[5:0] | **Port M Input Register** — This register always reads back the status of the associated pins. This also can be used to detect overload or short circuit conditions on output pins. |

### 2.3.2.3.3 Port M Data Direction Register (DDRM)

Module Base + 0x0012

| | 7 | 6 | 5 | 4 | 3 | 2 | 1 | 0 |
|---|---|---|---|---|---|---|---|---|
| R | 0 | 0 | DDRM5 | DDRM4 | DDRM3 | DDRM2 | DDRM1 | DDRM0 |
| W | | | | | | | | |
| Reset | — | — | 0 | 0 | 0 | 0 | 0 | 0 |

= Unimplemented or Reserved

**Figure 2-19. Port M Data Direction Register (DDRM)**

Read: Anytime.

Write: Anytime.

**Table 2-17. DDRM Field Descriptions**

| Field | Description |
|---|---|
| 5–0<br>DDRM[5:0] | **Data Direction Port M** — This register configures each port S pin as either input or output<br>If SPI or MSCAN is enabled, the SPI and MSCAN modules determines the pin directions. *Please refer to the SPI and MSCAN Block User Guides for details.*<br>If the associated SCI or MSCAN transmit or receive channels are enabled, this register has no effect on the pins. The pins are forced to be outputs if the SCI or MSCAN transmit channels are enabled, they are forced to be inputs if the SCI or MSCAN receive channels are enabled.<br>The DDRS bits revert to controlling the I/O direction of a pin when the associated channel is disabled.<br>0 Associated pin is configured as input.<br>1 Associated pin is configured as output.<br>**Note:** Due to internal synchronization circuits, it can take up to 2 bus cycles until the correct value is read on PTM or PTIM registers, when changing the DDRM register. |

#### 2.3.2.3.4 Port M Reduced Drive Register (RDRM)

Module Base + 0x0013

| | 7 | 6 | 5 | 4 | 3 | 2 | 1 | 0 |
|---|---|---|---|---|---|---|---|---|
| R | 0 | 0 | RDRM5 | RDRM4 | RDRM3 | RDRM2 | RDRM1 | RDRM0 |
| W | | | | | | | | |
| Reset | 0 | 0 | 0 | 0 | 0 | 0 | 0 | 0 |

= Unimplemented or Reserved

**Figure 2-20. Port M Reduced Drive Register (RDRM)**

Read: Anytime.

Write: Anytime.

**Table 2-18. RDRM Field Descriptions**

| Field | Description |
|---|---|
| 5–0<br>RDRM[5:0] | **Reduced Drive Port M** — This register configures the drive strength of each port M output pin as either full or reduced. If the port is used as input this bit is ignored.<br>0 Full drive strength at output.<br>1 Associated pin drives at about 1/3 of the full drive strength. |

#### 2.3.2.3.5 Port M Pull Device Enable Register (PERM)

Module Base + 0x0014

| | 7 | 6 | 5 | 4 | 3 | 2 | 1 | 0 |
|---|---|---|---|---|---|---|---|---|
| R | 0 | 0 | PERM5 | PERM4 | PERM3 | PERM2 | PERM1 | PERM0 |
| W | | | | | | | | |
| Reset | 0 | 0 | 1 | 1 | 1 | 1 | 1 | 1 |

= Unimplemented or Reserved

**Figure 2-21. Port M Pull Device Enable Register (PERM)**

Read: Anytime.

Write: Anytime.

**Table 2-19. PERM Field Descriptions**

| Field | Description |
|---|---|
| 5–0<br>PERM[5:0] | **Pull Device Enable Port M** — This register configures whether a pull-up or a pull-down device is activated, if the port is used as input or as output in wired-or (open drain) mode. This bit has no effect if the port is used as push-pull output. Out of reset a pull-up device is enabled.<br>0 Pull-up or pull-down device is disabled.<br>1 Either a pull-up or pull-down device is enabled. |

### 2.3.2.3.6 Port M Polarity Select Register (PPSM)

Module Base + 0x0015

| | 7 | 6 | 5 | 4 | 3 | 2 | 1 | 0 |
|---|---|---|---|---|---|---|---|---|
| R | 0 | 0 | PPSM5 | PPSM4 | PPSM3 | PPSM2 | PPSM1 | PPSM0 |
| W | | | | | | | | |
| Reset | 0 | 0 | 0 | 0 | 0 | 0 | 0 | 0 |

= Unimplemented or Reserved

**Figure 2-22. Port M Polarity Select Register (PPSM)**

Read: Anytime.

Write: Anytime.

**Table 2-20. PPSM Field Descriptions**

| Field | Description |
|---|---|
| 5–0<br>PPSM[5:0] | **Polarity Select Port M** — This register selects whether a pull-down or a pull-up device is connected to the pin.<br>0 A pull-up device is connected to the associated port M pin, if enabled by the associated bit in register PERM and if the port is used as input or as wired-or output.<br>1 A pull-down device is connected to the associated port M pin, if enabled by the associated bit in register PERM and if the port is used as input. |

### 2.3.2.3.7 Port M Wired-OR Mode Register (WOMM)

Module Base + 0x0016

| | 7 | 6 | 5 | 4 | 3 | 2 | 1 | 0 |
|---|---|---|---|---|---|---|---|---|
| R | 0 | 0 | WOMM5 | WOMM4 | WOMM3 | WOMM2 | WOMM1 | WOMM0 |
| W | | | | | | | | |
| Reset | 0 | 0 | 0 | 0 | 0 | 0 | 0 | 0 |

= Unimplemented or Reserved

**Figure 2-23. Port M Wired-OR Mode Register (WOMM)**

Read: Anytime.

Write: Anytime.

**Table 2-21. WOMM Field Descriptions**

| Field | Description |
|---|---|
| 5–0<br>WOMM[5:0] | **Wired-OR Mode Port M** — This register configures the output pins as wired-or. If enabled the output is driven active low only (open-drain). A logic level of “1” is not driven. This bit has no influence on pins used as inputs.<br>0 Output buffers operate as push-pull outputs.<br>1 Output buffers operate as open-drain outputs. |

### 2.3.2.4 Port P Registers

#### 2.3.2.4.1 Port P I/O Register (PTP)

Module Base + 0x0018

| | 7 | 6 | 5 | 4 | 3 | 2 | 1 | 0 |
|---|---|---|---|---|---|---|---|---|
| R<br>W | PTP7 | PTP6 | PTP5 | PTP4 | PTP3 | PTP2 | PTP1 | PTP0 |
| PWM | — | — | PWM5 | PWM4 | PWM3 | PWM2 | PWM1 | PWM0 |
| Reset | 0 | 0 | 0 | 0 | 0 | 0 | 0 | 0 |

**Figure 2-24. Port P I/O Register (PTP)**

Read: Anytime.

Write: Anytime.

If the data direction bits of the associated I/O pins are set to 1, a read returns the value of the port register, otherwise the value at the pins is read.

#### 2.3.2.4.2 Port P Input Register (PTIP)

Module Base + 0x0019

| | 7 | 6 | 5 | 4 | 3 | 2 | 1 | 0 |
|---|---|---|---|---|---|---|---|---|
| R | PTIP7 | PTIP6 | PTIP5 | PTIP4 | PTIP3 | PTIP2 | PTIP1 | PTIP0 |
| W | | | | | | | | |
| Reset | — | — | — | — | — | — | — | — |

= Unimplemented or Reserved

**Figure 2-25. Port P Input Register (PTIP)**

Read: Anytime.

Write: Never, writes to this register have no effect.

This register always reads back the status of the associated pins. This can be also used to detect overload or short circuit conditions on output pins.

### 2.3.2.4.3 Port P Data Direction Register (DDRP)

Module Base + 0x001A

| | 7 | 6 | 5 | 4 | 3 | 2 | 1 | 0 |
|---|---|---|---|---|---|---|---|---|
| R<br>W | DDRP7 | DDRP6 | DDRP5 | DDRP4 | DDRP3 | DDRP2 | DDRP1 | DDRP0 |
| Reset | 0 | 0 | 0 | 0 | 0 | 0 | 0 | 0 |

**Figure 2-26. Port P Data Direction Register (DDRP)**

Read: Anytime.

Write: Anytime.

**Table 2-22. DDRP Field Descriptions**

| Field | Description |
|---|---|
| 7–0<br>DDRP[7:0] | **Data Direction Port P** — This register configures each port P pin as either input or output.<br>0 Associated pin is configured as input.<br>1 Associated pin is configured as output.<br>**Note:** Due to internal synchronization circuits, it can take up to 2 bus cycles until the correct value is read on PTP or PTIP registers, when changing the DDRP register. |

### 2.3.2.4.4 Port P Reduced Drive Register (RDRP)

Module Base + 0x001B

| | 7 | 6 | 5 | 4 | 3 | 2 | 1 | 0 |
|---|---|---|---|---|---|---|---|---|
| R<br>W | RDRP7 | RDRP6 | RDRP5 | RDRP4 | RDRP3 | RDRP2 | RDRP1 | RDRP0 |
| Reset | 0 | 0 | 0 | 0 | 0 | 0 | 0 | 0 |

**Figure 2-27. Port P Reduced Drive Register (RDRP)**

Read: Anytime.

Write: Anytime.

**Table 2-23. RDRP Field Descriptions**

| Field | Description |
|---|---|
| 7–0<br>RDRP[7:0] | **Reduced Drive Port P** — This register configures the drive strength of each port P output pin as either full or reduced. If the port is used as input this bit is ignored.<br>0 Full drive strength at output.<br>1 Associated pin drives at about 1/3 of the full drive strength. |

#### 2.3.2.4.5 Port P Pull Device Enable Register (PERP)

Module Base + 0x001C

| | 7 | 6 | 5 | 4 | 3 | 2 | 1 | 0 |
|---|---|---|---|---|---|---|---|---|
| R<br>W | PERP7 | PERP6 | PERP5 | PERP4 | PERP3 | PERP2 | PERP1 | PERP0 |
| Reset | 0 | 0 | 0 | 0 | 0 | 0 | 0 | 0 |

**Figure 2-28. Port P Pull Device Enable Register (PERP)**

Read: Anytime.

Write: Anytime.

**Table 2-24. PERP Field Descriptions**

| Field | Description |
|---|---|
| 7–0<br>PERP[7:0] | **Pull Device Enable Port P** — This register configures whether a pull-up or a pull-down device is activated, if the port is used as input. This bit has no effect if the port is used as output. Out of reset no pull device is enabled.<br>0 Pull-up or pull-down device is disabled.<br>1 Either a pull-up or pull-down device is enabled. |

#### 2.3.2.4.6 Port P Polarity Select Register (PPSP)

Module Base + 0x001D

| | 7 | 6 | 5 | 4 | 3 | 2 | 1 | 0 |
|---|---|---|---|---|---|---|---|---|
| R<br>W | PPSP7 | PPSP6 | PPSP5 | PPSP4 | PPSP3 | PPSP2 | PPSP1 | PPSP0 |
| Reset | 0 | 0 | 0 | 0 | 0 | 0 | 0 | 0 |

**Figure 2-29. Port P Polarity Select Register (PPSP)**

Read: Anytime.

Write: Anytime.

**Table 2-25. PPSP Field Descriptions**

| Field | Description |
|---|---|
| 7–0<br>PPSP[7:0] | **Pull Select Port P** — This register serves a dual purpose by selecting the polarity of the active interrupt edge as well as selecting a pull-up or pull-down device if enabled.<br>0 Falling edge on the associated port P pin sets the associated flag bit in the PIFP register.A pull-up device is connected to the associated port P pin, if enabled by the associated bit in register PERP and if the port is used as input.<br>1 Rising edge on the associated port P pin sets the associated flag bit in the PIFP register.A pull-down device is connected to the associated port P pin, if enabled by the associated bit in register PERP and if the port is used as input. |

### 2.3.2.4.7 Port P Interrupt Enable Register (PIEP)

Module Base + 0x001E

| | 7 | 6 | 5 | 4 | 3 | 2 | 1 | 0 |
|---|---|---|---|---|---|---|---|---|
| R<br>W | PIEP7 | PIEP6 | PIEP5 | PIEP4 | PIEP3 | PIEP2 | PIEP1 | PIEP0 |
| Reset | 0 | 0 | 0 | 0 | 0 | 0 | 0 | 0 |

**Figure 2-30. Port P Interrupt Enable Register (PIEP)**

Read: Anytime.

Write: Anytime.

**Table 2-26. PIEP Field Descriptions**

| Field | Description |
|---|---|
| 7–0<br>PIEP[7:0] | **Pull Select Port P** — This register disables or enables on a per pin basis the edge sensitive external interrupt associated with port P.<br>0 Interrupt is disabled (interrupt flag masked).<br>1 Interrupt is enabled. |

### 2.3.2.4.8 Port P Interrupt Flag Register (PIFP)

Module Base + 0x001F

| | 7 | 6 | 5 | 4 | 3 | 2 | 1 | 0 |
|---|---|---|---|---|---|---|---|---|
| R<br>W | PIFP7 | PIFP6 | PIFP5 | PIFP4 | PIFP3 | PIFP2 | PIFP1 | PIFP0 |
| Reset | 0 | 0 | 0 | 0 | 0 | 0 | 0 | 0 |

**Figure 2-31. Port P Interrupt Flag Register (PIFP)**

Read: Anytime.

Write: Anytime.

**Table 2-27. PIFP Field Descriptions**

| Field | Description |
|---|---|
| 7–0<br>PIFP[7:0] | **Interrupt Flags Port P** — Each flag is set by an active edge on the associated input pin. This could be a rising or a falling edge based on the state of the PPSP register. To clear this flag, write a “1” to the corresponding bit in the PIFP register. Writing a “0” has no effect.<br>0 No active edge pending.<br>Writing a “0” has no effect.<br>1 Active edge on the associated bit has occurred (an interrupt will occur if the associated enable bit is set).<br>Writing a “1” clears the associated flag. |

### 2.3.2.5 Port J Registers

#### 2.3.2.5.1 Port J I/O Register (PTJ)

Module Base + 0x0028

| | 7 | 6 | 5 | 4 | 3 | 2 | 1 | 0 |
|---|---|---|---|---|---|---|---|---|
| R | PTJ7 | PTJ6 | 0 | 0 | 0 | 0 | 0 | 0 |
| W | | | | | | | | |
| Reset | 0 | 0 | — | — | — | — | — | — |

= Unimplemented or Reserved

**Figure 2-32. Port J I/O Register (PTJ)**

Read: Anytime.

Write: Anytime.

If the data direction bits of the associated I/O pins are set to 1, a read returns the value of the port register, otherwise the value at the pins is read.

#### 2.3.2.5.2 Port J Input Register (PTIJ)

Module Base + 0x0029

| | 7 | 6 | 5 | 4 | 3 | 2 | 1 | 0 |
|---|---|---|---|---|---|---|---|---|
| R | PTIJ7 | PTIJ6 | 0 | 0 | 0 | 0 | 0 | 0 |
| W | | | | | | | | |
| Reset | 0 | 0 | — | — | — | — | — | — |

= Unimplemented or Reserved

**Figure 2-33. Port J Input Register (PTIJ)**

Read: Anytime.

Write: Never, writes to this register have no effect.

This register always reads back the status of the associated pins. This can be used to detect overload or short circuit conditions on output pins.

### 2.3.2.5.3 Port J Data Direction Register (DDRJ)

Module Base + 0x002A

| | 7 | 6 | 5 | 4 | 3 | 2 | 1 | 0 |
|---|---|---|---|---|---|---|---|---|
| R | DDRJ7 | DDRJ6 | 0 | 0 | 0 | 0 | 0 | 0 |
| W | | | | | | | | |
| Reset | 0 | 0 | — | — | — | — | — | — |

= Unimplemented or Reserved

**Figure 2-34. Port J Data Direction Register (DDRJ)**

Read: Anytime.

Write: Anytime.

**Table 2-28. DDRJ Field Descriptions**

| Field | Description |
|---|---|
| 7–6<br>DDRJ[7:6] | **Data Direction Port J** — This register configures port pins J[7:6] as either input or output.<br>DDRJ[7:6] — Data Direction Port J<br>0 Associated pin is configured as input.<br>1 Associated pin is configured as output.<br>**Note:** Due to internal synchronization circuits, it can take up to 2 bus cycles until the correct value is read on PTJ or PTIJ registers, when changing the DDRJ register. |

### 2.3.2.5.4 Port J Reduced Drive Register (RDRJ)

Module Base + 0x002B

| | 7 | 6 | 5 | 4 | 3 | 2 | 1 | 0 |
|---|---|---|---|---|---|---|---|---|
| R | RDRJ7 | RDRJ6 | 0 | 0 | 0 | 0 | 0 | 0 |
| W | | | | | | | | |
| Reset | 0 | 0 | — | — | — | — | — | — |

= Unimplemented or Reserved

**Figure 2-35. Port J Reduced Drive Register (RDRJ)**

Read: Anytime.

Write: Anytime.

**Table 2-29. RDRJ Field Descriptions**

| Field | Description |
|---|---|
| 7–6<br>RDRJ[7:6] | **Reduced Drive Port J** — This register configures the drive strength of each port J output pin as either full or reduced. If the port is used as input this bit is ignored.<br>0 Full drive strength at output.<br>1 Associated pin drives at about 1/3 of the full drive strength. |

### 2.3.2.5.5 Port J Pull Device Enable Register (PERJ)

Module Base + 0x002C

| | 7 | 6 | 5 | 4 | 3 | 2 | 1 | 0 |
|---|---|---|---|---|---|---|---|---|
| R | PERJ7 | PERJ6 | 0 | 0 | 0 | 0 | 0 | 0 |
| W | | | | | | | | |
| Reset | 0 | 0 | — | — | — | — | — | — |

= Unimplemented or Reserved

**Figure 2-36. Port J Pull Device Enable Register (PERJ)**

Read: Anytime.

Write: Anytime.

**Table 2-30. PERJ Field Descriptions**

| Field | Description |
|---|---|
| 7–6<br>PERJ[7:6] | **Reduced Drive Port J** — This register configures whether a pull-up or a pull-down device is activated, if the port is used as input or as wired-or output. This bit has no effect if the port is used as push-pull output.<br>0 Pull-up or pull-down device is disabled.<br>1 Either a pull-up or pull-down device is enabled. |

### 2.3.2.5.6 Port J Polarity Select Register (PPSJ)

Module Base + 0x002D

| | 7 | 6 | 5 | 4 | 3 | 2 | 1 | 0 |
|---|---|---|---|---|---|---|---|---|
| R | PPSJ7 | PPSJ6 | 0 | 0 | 0 | 0 | 0 | 0 |
| W | | | | | | | | |
| Reset | 0 | 0 | — | — | — | — | — | — |

= Unimplemented or Reserved

**Figure 2-37. Port J Polarity Select Register (PPSJ)**

Read: Anytime.

Write: Anytime.

**Table 2-31. PPSJ Field Descriptions**

| Field | Description |
|---|---|
| 7–6<br>PPSJ[7:6] | **Reduced Drive Port J** — This register serves a dual purpose by selecting the polarity of the active interrupt edge as well as selecting a pull-up or pull-down device if enabled.<br>0 Falling edge on the associated port J pin sets the associated flag bit in the PIFJ register.<br>A pull-up device is connected to the associated port J pin, if enabled by the associated bit in register PERJ and if the port is used as general purpose input.<br>1 Rising edge on the associated port J pin sets the associated flag bit in the PIFJ register.<br>A pull-down device is connected to the associated port J pin, if enabled by the associated bit in register PERJ and if the port is used as input. |

### 2.3.2.5.7 Port J Interrupt Enable Register (PIEJ)

Module Base + 0x002E

| | 7 | 6 | 5 | 4 | 3 | 2 | 1 | 0 |
|---|---|---|---|---|---|---|---|---|
| R | PIEJ7 | PIEJ6 | 0 | 0 | 0 | 0 | 0 | 0 |
| W | | | | | | | | |
| Reset | 0 | 0 | — | — | — | — | — | — |

= Unimplemented or Reserved

**Figure 2-38. Port J Interrupt Enable Register (PIEJ)**

Read: Anytime.

Write: Anytime.

**Table 2-32. PIEJ Field Descriptions**

| Field | Description |
|---|---|
| 7–6<br>PIEJ[7:6] | **Interrupt Enable Port J** — This register disables or enables on a per pin basis the edge sensitive external interrupt associated with port J.<br>0 Interrupt is disabled (interrupt flag masked).<br>1 Interrupt is enabled. |

### 2.3.2.5.8 Port J Interrupt Flag Register (PIFJ)

Module Base + 0x002F

| | 7 | 6 | 5 | 4 | 3 | 2 | 1 | 0 |
|---|---|---|---|---|---|---|---|---|
| R | PIFJ7 | PIFJ6 | 0 | 0 | 0 | 0 | 0 | 0 |
| W | | | | | | | | |
| Reset | 0 | 0 | — | — | — | — | — | — |

= Unimplemented or Reserved

**Figure 2-39. Port J Interrupt Flag Register (PIFJ)**

Read: Anytime.

Write: Anytime.

**Table 2-33. PIFJ Field Descriptions**

| Field | Description |
|---|---|
| 7–6<br>PIFJ[7:6] | **Interrupt Flags Port J** — Each flag is set by an active edge on the associated input pin. This could be a rising or a falling edge based on the state of the PPSJ register. To clear this flag, write “1” to the corresponding bit in the PIFJ register. Writing a “0” has no effect.<br>0 No active edge pending.<br>Writing a “0” has no effect.<br>1 Active edge on the associated bit has occurred (an interrupt will occur if the associated enable bit is set).<br>Writing a “1” clears the associated flag. |

### 2.3.2.6 Port AD Registers

#### 2.3.2.6.1 Port AD I/O Register (PTAD)

Module Base + 0x0030

| | 7 | 6 | 5 | 4 | 3 | 2 | 1 | 0 |
|---|---|---|---|---|---|---|---|---|
| R<br>W | PTAD7 | PTAD6 | PTAD5 | PTAD4 | PTAD3 | PTAD2 | PTAD1 | PTAD0 |
| Reset | 0 | 0 | 0 | 0 | 0 | 0 | 0 | 0 |

**Figure 2-40. Port AD I/O Register (PTAD)**

Read: Anytime.

Write: Anytime.

If the data direction bits of the associated I/O pins are set to 1, a read returns the value of the port register, otherwise the value at the pins is read.

#### 2.3.2.6.2 Port AD Input Register (PTIAD)

Module Base + 0x0031

| | 7 | 6 | 5 | 4 | 3 | 2 | 1 | 0 |
|---|---|---|---|---|---|---|---|---|
| R | PTIAD7 | PTIAD6 | PTIAD5 | PTIAD4 | PTIAD3 | PTIAD2 | PTIAD1 | PTIAD0 |
| W | | | | | | | | |
| Reset | — | — | — | — | — | — | — | — |

= Unimplemented or Reserved

**Figure 2-41. Port AD Input Register (PTIAD)**

Read: Anytime.

Write: Never, writes to this register have no effect.

This register always reads back the status of the associated pins. This can be used to detect overload or short circuit conditions on output pins.

### 2.3.2.6.3 Port AD Data Direction Register (DDRAD)

Module Base + 0x0032

| | 7 | 6 | 5 | 4 | 3 | 2 | 1 | 0 |
|---|---|---|---|---|---|---|---|---|
| R<br>W | DDRAD7 | DDRAD6 | DDRAD5 | DDRAD4 | DDRAD3 | DDRAD2 | DDRAD1 | DDRAD0 |
| Reset | 0 | 0 | 0 | 0 | 0 | 0 | 0 | 0 |

**Figure 2-42. Port AD Data Direction Register (DDRAD)**

Read: Anytime.

Write: Anytime.

**Table 2-34. DDRAD Field Descriptions**

| Field | Description |
|---|---|
| 7–0<br>DDRAD[7:0] | **Data Direction Port AD** — This register configures port pins AD[7:0] as either input or output.<br>0 Associated pin is configured as input.<br>1 Associated pin is configured as output.<br>**Note:** Due to internal synchronization circuits, it can take up to 2 bus cycles until the correct value is read on PTAD or PTIAD registers, when changing the DDRAD register. |

### 2.3.2.6.4 Port AD Reduced Drive Register (RDRAD)

Module Base + 0x0033

| | 7 | 6 | 5 | 4 | 3 | 2 | 1 | 0 |
|---|---|---|---|---|---|---|---|---|
| R<br>W | RDRAD7 | RDRAD6 | RDRAD5 | RDRAD4 | RDRAD3 | RDRAD2 | RDRAD1 | RDRAD0 |
| Reset | 0 | 0 | 0 | 0 | 0 | 0 | 0 | 0 |

**Figure 2-43. Port AD Reduced Drive Register (RDRAD)**

Read: Anytime.

Write: Anytime.

**Table 2-35. RDRAD Field Descriptions**

| Field | Description |
|---|---|
| 7–0<br>RDRAD[7:0] | **Reduced Drive Port AD** — This register configures the drive strength of each port AD output pin as either full or reduced. If the port is used as input this bit is ignored.<br>0 Full drive strength at output.<br>1 Associated pin drives at about 1/3 of the full drive strength. |

### 2.3.2.6.5 Port AD Pull Device Enable Register (PERAD)

Module Base + 0x0034

| | 7 | 6 | 5 | 4 | 3 | 2 | 1 | 0 |
|---|---|---|---|---|---|---|---|---|
| R<br>W | PERAD7 | PERAD6 | PERAD5 | PERAD4 | PERAD3 | PERAD2 | PERAD1 | PERAD0 |
| Reset | 0 | 0 | 0 | 0 | 0 | 0 | 0 | 0 |

**Figure 2-44. Port AD Pull Device Enable Register (PERAD)**

Read: Anytime.

Write: Anytime.

**Table 2-36. PERAD Field Descriptions**

| Field | Description |
|---|---|
| 7–0<br>PERAD[7:0] | **Pull Device Enable Port AD** — This register configures whether a pull-up or a pull-down device is activated, if the port is used as input. This bit has no effect if the port is used as output. Out of reset no pull device is enabled.<br>It is not possible to enable pull devices when a associated ATD channel is enabled simultaneously.<br>0 Pull-up or pull-down device is disabled.<br>1 Either a pull-up or pull-down device is enabled. |

### 2.3.2.6.6 Port AD Polarity Select Register (PPSAD)

Module Base + 0x0035

| | 7 | 6 | 5 | 4 | 3 | 2 | 1 | 0 |
|---|---|---|---|---|---|---|---|---|
| R<br>W | PPSAD7 | PPSAD6 | PPSAD5 | PPSAD4 | PPSAD3 | PPSAD2 | PPSAD1 | PPSAD0 |
| Reset | 0 | 0 | 0 | 0 | 0 | 0 | 0 | 0 |

**Figure 2-45. Port AD Polarity Select Register (PPSAD)**

Read: Anytime.

Write: Anytime.

**Table 2-37. PPSAD Field Descriptions**

| Field | Description |
|---|---|
| 7–0<br>PPSAD[7:0] | **Pull Select Port AD** — This register selects whether a pull-down or a pull-up device is connected to the pin.<br>0 A pull-up device is connected to the associated port AD pin, if enabled by the associated bit in register PERAD and if the port is used as input.<br>1 A pull-down device is connected to the associated port AD pin, if enabled by the associated bit in register PERAD and if the port is used as input. |

## 2.4 Functional Description

Each pin can act as general purpose I/O. In addition the pin can act as an output from a peripheral module or an input to a peripheral module.

A set of configuration registers is common to all ports. All registers can be written at any time, however a specific configuration might not become active.

Example: Selecting a pull-up resistor. This resistor does not become active while the port is used as a push-pull output.

### 2.4.1 Registers

#### 2.4.1.1 I/O Register

This register holds the value driven out to the pin if the port is used as a general purpose I/O. Writing to this register has only an effect on the pin if the port is used as general purpose output. When reading this address, the value of the pins are returned if the data direction register bits are set to 0.

If the data direction register bits are set to 1, the contents of the I/O register is returned. This is independent of any other configuration (Figure 2-46).

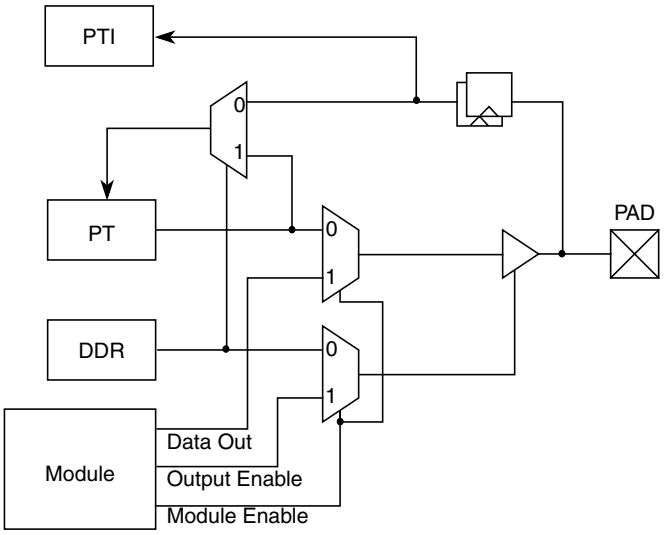


**Figure 2-46. Illustration of I/O Pin Functionality**

#### 2.4.1.2 Input Register

This is a read-only register and always returns the value of the pin (Figure 2-46).

#### 2.4.1.3 Data Direction Register

This register defines whether the pin is used as an input or an output. If a peripheral module controls the pin the contents of the data direction register is ignored (Figure 2-46).

#### 2.4.1.4 Reduced Drive Register

If the port is used as an output the register allows the configuration of the drive strength.

#### 2.4.1.5 Pull Device Enable Register

This register turns on a pull-up or pull-down device. It becomes only active if the pin is used as an input or as a wired-or output.

#### 2.4.1.6 Polarity Select Register

This register selects either a pull-up or pull-down device if enabled. It becomes only active if the pin is used as an input. A pull-up device can be activated if the pin is used as a wired-OR output.

### 2.4.2 Port Descriptions

#### 2.4.2.1 Port T

This port is associated with the Standard Capture Timer. PWM output channels can be rerouted from port P to port pins T. In all modes, port T pins can be used for either general-purpose I/O, Standard Capture Timer I/O or as PWM channels module, if so configured by MODRR.

During reset, port T pins are configured as high-impedance inputs.

#### 2.4.2.2 Port S

This port is associated with the serial SCI module. Port S pins PS[3:0] can be used either for general-purpose I/O, or with the SCI subsystem.

During reset, port S pins are configured as inputs with pull-up.

#### 2.4.2.3 Port M

This port is associated with the MSCAN and SPI module. Port M pins PM[5:0] can be used either for general-purpose I/O, with the MSCAN or SPI subsystems.

During reset, port M pins are configured as inputs with pull-up.

#### 2.4.2.4 Port AD

This port is associated with the ATD module. Port AD pins can be used either for general-purpose I/O, or for the ATD subsystem. There are 2 data port registers associated with the Port AD: PTAD[7:0], located in the PIM and PORTAD[7:0] located in the ATD.

To use PTAD[n] as a standard input port, the corresponding DDRD[n] must be cleared. To use PTAD[n] as a standard output port, the corresponding DDRD[n] must be set

NOTE: To use PORTAD[n], located in the ATD as an input port register, DDRD[n] must be cleared and ATDDIEN[n] must be set. *Please refer to ATD Block Guide for details*.

### 2.4.2.5 Port P

The PWM module is connected to port P. Port P pins can be used as PWM outputs. Further the Keypad Wake-Up function is implemented on pins PP[7:0]. During reset, port P pins are configured as high-impedance inputs.

Port P offers 8 general purpose I/O pins with edge triggered interrupt capability in wired-or fashion. The interrupt enable as well as the sensitivity to rising or falling edges can be individually configured on per pin basis. All 8 bits/pins share the same interrupt vector. Interrupts can be used with the pins configured as inputs or outputs.

An interrupt is generated when a bit in the port interrupt flag register and its corresponding port interrupt enable bit are both set. This external interrupt feature is capable to wake up the CPU when it is in STOP or WAIT mode.

A digital filter on each pin prevents pulses (Figure 2-48) shorter than a specified time from generating an interrupt. The minimum time varies over process conditions, temperature and voltage (Figure 2-47 and Table 2-38).

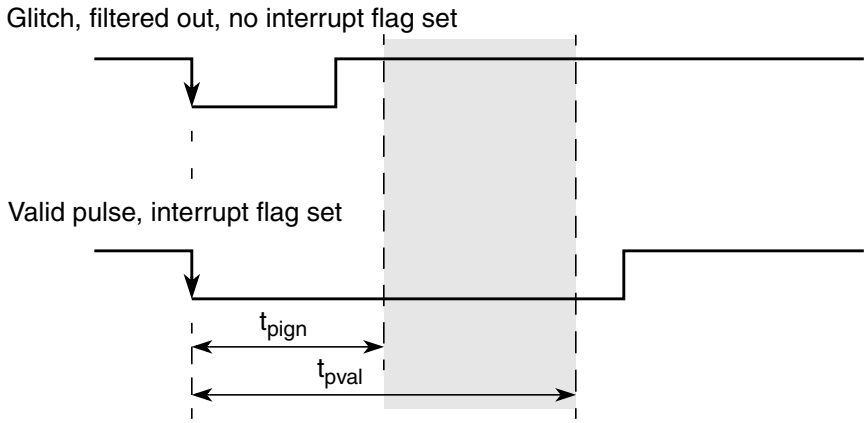


**Figure 2-47. Interrupt Glitch Filter on Port P and J (PPS = 0)**

**Table 2-38. Pulse Detection Criteria**

| Pulse | $\overline{\text{STOP}}$ Mode | | STOP[1] Mode | |
|---|---|---|---|---|
| | Value | Unit | Value | Unit |
| Ignored | $t_{pign}$ <= 3 | Bus clocks | $t_{pign}$ <= 3.2 | µs |
| Uncertain | 3 < $t_{pulse}$ < 4 | Bus clocks | 3.2 < $t_{pulse}$ < 10 | µs |
| Valid | $t_{pval}$ >= 4 | Bus clocks | $t_{pval}$ >= 10 | µs |

1. These values include the spread of the oscillator frequency over temperature, voltage and process.

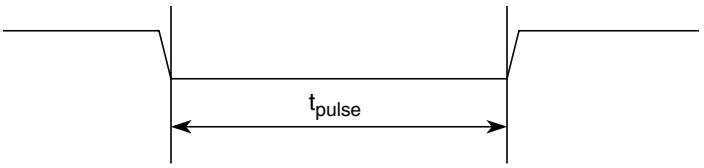


**Figure 2-48. Pulse Illustration**

A valid edge on input is detected if 4 consecutive samples of a passive level are followed by 4 consecutive samples of an active level directly or indirectly.

The filters are continuously clocked by the bus clock in RUN and WAIT mode. In STOP mode the clock is generated by a single RC oscillator in the Port Integration Module. To maximize current saving the RC oscillator runs only if the following condition is true on any pin:

Sample count <= 4 and port interrupt enabled (PIE=1) and port interrupt flag not set (PIF=0).

#### 2.4.2.6 Port J

In all modes, port J pins PJ[7:6] can be used for general purpose I/O or interrupt driven general purpose I/O's. During reset, port J pins are configured as inputs.

Port J offers 2 I/O ports with the same interrupt features as on port P.

### 2.4.3 Port A, B, E and BKGD Pin

All port and pin logic is located in the core module. Please *refer to S12_mebi Block User Guide for details.*

### 2.4.4 External Pin Descriptions

All ports start up as general purpose inputs on reset.

### 2.4.5 Low Power Options

#### 2.4.5.1 Run Mode

No low power options exist for this module in run mode.

#### 2.4.5.2 Wait Mode

No low power options exist for this module in wait mode.

#### 2.4.5.3 Stop Mode

All clocks are stopped. There are asynchronous paths to generate interrupts from STOP on port P and J.

## 2.5 Initialization Information

The reset values of all registers are given in Section 2.3.2, "Register Descriptions".

### 2.5.1 Reset Initialization

All registers including the data registers get set/reset asynchronously. Table 2-39 summarizes the port properties after reset initialization.

**Table 2-39. Port Reset State Summary**

| Port | Reset States | | | | |
|---|---|---|---|---|---|
| | Data Direction | Pull Mode | Reduced Drive | Wired-OR Mode | Interrupt |
| T | Input | Hi-z | Disabled | n/a | n/a |
| S | Input | Pull up | Disabled | Disabled | n/a |
| M | Input | Pull up | Disabled | Disabled | n/a |
| P | Input | Hi-z | Disabled | n/a | Disabled |
| J | Input | Hi-z | Disabled | n/a | Disabled |
| A | Refer to MEBI Block Guide for details. | | | | |
| B | | | | | |
| E | | | | | |
| | | | | | |
| BKGD pin | Refer to BDM Block Guide for details. | | | | |

## 2.6 Interrupts

Port P and J generate a separate edge sensitive interrupt if enabled.

### 2.6.1 Interrupt Sources

**Table 2-40. Port Integration Module Interrupt Sources**

| Interrupt Source | Interrupt Flag | Local Enable | Global (CCR) Mask |
|---|---|---|---|
| Port P | PIFP[7:0] | PIEP[7:0] | I Bit |
| Port J | PIFJ[7:6] | PIEJ[7:6] | I Bit |

**NOTE**

Vector addresses and their relative interrupt priority are determined at the MCU level.

### 2.6.2 Recovery from STOP

The PIM can generate wake-up interrupts from STOP on port P and J. For other sources of external interrupts please refer to the respective Block User Guide.

## 2.7 Application Information

It is not recommended to write PORTx and DDRx in a word access. When changing the register pins from inputs to outputs, the data may have extra transitions during the write access. Initialize the port data register before enabling the outputs.

Power consumption will increase the more the voltages on general purpose input pins deviate from the supply voltages towards mid-range because the digital input buffers operate in the linear region.

# Chapter 3
# Module Mapping Control (MMCV4) Block Description

## 3.1 Introduction

This section describes the functionality of the module mapping control (MMC) sub-block of the S12 core platform.

The block diagram of the MMC is shown in Figure 3-1.

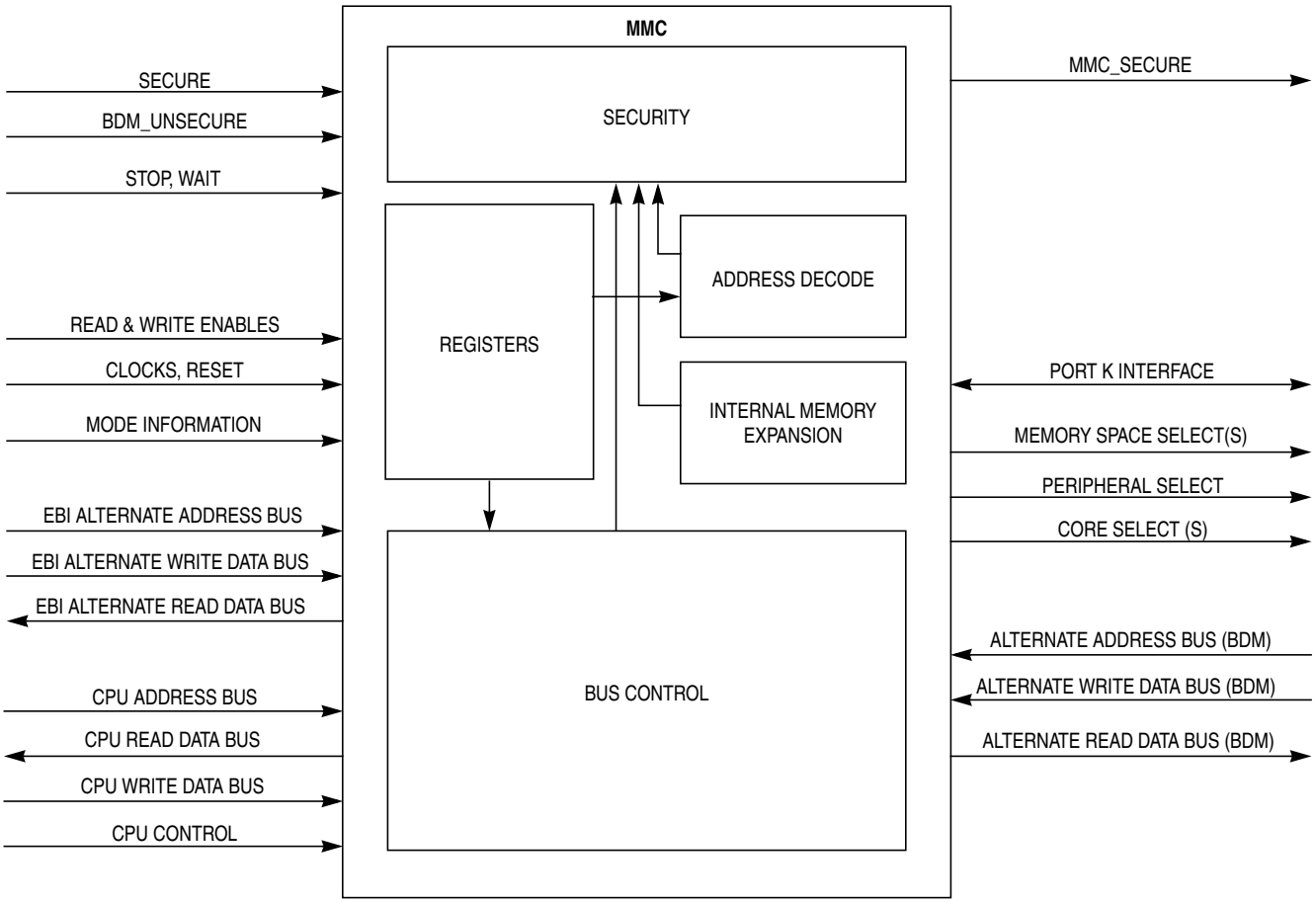


**Figure 3-1. MMC Block Diagram**

The MMC is the sub-module which controls memory map assignment and selection of internal resources and external space. Internal buses between the core and memories and between the core and peripherals is controlled in this module. The memory expansion is generated in this module.

### 3.1.1 Features

- Registers for mapping of address space for on-chip RAM, EEPROM, and FLASH (or ROM) memory blocks and associated registers
- Memory mapping control and selection based upon address decode and system operating mode
- Core address bus control
- Core data bus control and multiplexing
- Core security state decoding
- Emulation chip select signal generation ($\overline{ECS}$)
- External chip select signal generation ($\overline{XCS}$)
- Internal memory expansion
- External stretch and ROM mapping control functions via the MISC register
- Reserved registers for test purposes
- Configurable system memory options defined at integration of core into the system-on-a-chip (SoC).

### 3.1.2 Modes of Operation

Some of the registers operate differently depending on the mode of operation (i.e., normal expanded wide, special single chip, etc.). This is best understood from the register descriptions.

## 3.2 External Signal Description

All interfacing with the MMC sub-block is done within the core, it has no external signals.

## 3.3 Memory Map and Register Definition

A summary of the registers associated with the MMC sub-block is shown in Figure 3-2. Detailed descriptions of the registers and bits are given in the subsections that follow.

### 3.3.1 Module Memory Map

**Table 3-1. MMC Memory Map**

| Address Offset | Register | Access |
|---|---|---|
| 0x0010 | Initialization of Internal RAM Position Register (INITRM) | R/W |
| 0x0011 | Initialization of Internal Registers Position Register (INITRG) | R/W |
| 0x0012 | Initialization of Internal EEPROM Position Register (INITEE) | R/W |
| 0x0013 | Miscellaneous System Control Register (MISC) | R/W |
| 0x0014 | Reserved | — |
| . . | . . | — |

**Table 3-1. MMC Memory Map (continued)**

| Address Offset | Register | Access |
|---|---|---|
| 0x0017 | Reserved | — |
| . . | . . | — |
| 0x001C | Memory Size Register 0 (MEMSIZ0) | R |
| 0x001D | Memory Size Register 1 (MEMSIZ1) | R |
| . . | . . | |
| 0x0030 | Program Page Index Register (PPAGE) | R/W |
| 0x0031 | Reserved | — |

## 3.3.2 Register Descriptions

| Name | | Bit 7 | 6 | 5 | 4 | 3 | 2 | 1 | Bit 0 |
|---|---|---|---|---|---|---|---|---|---|
| 0x0010 INITRM | R | RAM15 | RAM14 | RAM13 | RAM12 | RAM11 | 0 | 0 | RAMHAL |
| | W | | | | | | | | |
| 0x0011 INITRG | R | 0 | REG14 | REG13 | REG12 | REG11 | 0 | 0 | 0 |
| | W | | | | | | | | |
| 0x0012 INITEE | R | EE15 | EE14 | EE13 | EE12 | EE11 | 0 | 0 | EEON |
| | W | | | | | | | | |
| 0x0013 MISC | R | 0 | 0 | 0 | 0 | EXSTR1 | EXSTR0 | ROMHM | ROMON |
| | W | | | | | | | | |
| 0x0014 MTSTO | R | Bit 7 | 6 | 5 | 4 | 3 | 2 | 1 | Bit 0 |
| | W | | | | | | | | |
| 0x0017 MTST1 | R | Bit 7 | 6 | 5 | 4 | 3 | 2 | 1 | Bit 0 |
| | W | | | | | | | | |
| 0x001C MEMSIZ0 | R | REG_SW0 | 0 | EEP_SW1 | EEP_SW0 | 0 | RAM_SW2 | RAM_SW1 | RAM_SW0 |
| | W | | | | | | | | |
| 0x001D MEMSIZ1 | R | ROM_SW1 | ROM_SW0 | 0 | 0 | 0 | 0 | PAG_SW1 | PAG_SW0 |
| | W | | | | | | | | |
| 0x0030 PPAGE | R | 0 | 0 | PIX5 | PIX4 | PIX3 | PIX2 | PIX1 | PIX0 |
| | W | | | | | | | | |
| 0x0031 Reserved | R | 0 | 0 | 0 | 0 | 0 | 0 | 0 | 0 |
| | W | | | | | | | | |

= Unimplemented

**Figure 3-2. MMC Register Summary**

### 3.3.2.1 Initialization of Internal RAM Position Register (INITRM)

Module Base + 0x0010
Starting address location affected by INITRG register setting.

| | 7 | 6 | 5 | 4 | 3 | 2 | 1 | 0 |
|---|---|---|---|---|---|---|---|---|
| R | RAM15 | RAM14 | RAM13 | RAM12 | RAM11 | 0 | 0 | RAMHAL |
| W | | | | | | | | |
| Reset | 0 | 0 | 0 | 0 | 1 | 0 | 0 | 1 |

= Unimplemented or Reserved

**Figure 3-3. Initialization of Internal RAM Position Register (INITRM)**

Read: Anytime

Write: Once in normal and emulation modes, anytime in special modes

**NOTE**

Writes to this register take one cycle to go into effect.

This register initializes the position of the internal RAM within the on-chip system memory map.

**Table 3-2. INITRM Field Descriptions**

| Field | Description |
|---|---|
| 7:3<br>RAM[15:11] | **Internal RAM Map Position** — These bits determine the upper five bits of the base address for the system's internal RAM array. |
| 0<br>RAMHAL | **RAM High-Align** — RAMHAL specifies the alignment of the internal RAM array.<br>0 Aligns the RAM to the lowest address (0x0000) of the mappable space<br>1 Aligns the RAM to the higher address (0xFFFF) of the mappable space |

### 3.3.2.2 Initialization of Internal Registers Position Register (INITRG)

Module Base + 0x0011
Starting address location affected by INITRG register setting.

| | 7 | 6 | 5 | 4 | 3 | 2 | 1 | 0 |
|---|---|---|---|---|---|---|---|---|
| R | 0 | REG14 | REG13 | REG12 | REG11 | 0 | 0 | 0 |
| W | | | | | | | | |
| Reset | 0 | 0 | 0 | 0 | 0 | 0 | 0 | 0 |

= Unimplemented or Reserved

**Figure 3-4. Initialization of Internal Registers Position Register (INITRG)**

Read: Anytime

Write: Once in normal and emulation modes and anytime in special modes

This register initializes the position of the internal registers within the on-chip system memory map. The registers occupy either a 1K byte or 2K byte space and can be mapped to any 2K byte space within the first 32K bytes of the system's address space.

**Table 3-3. INITRG Field Descriptions**

| Field | Description |
|---|---|
| 6:3<br>REG[14:11] | **Internal Register Map Position** — These four bits in combination with the leading zero supplied by bit 7 of INITRG determine the upper five bits of the base address for the system's internal registers (i.e., the minimum base address is 0x0000 and the maximum is 0x7FFF). |

### 3.3.2.3 Initialization of Internal EEPROM Position Register (INITEE)

Module Base + 0x0012
Starting address location affected by INITRG register setting.

| | 7 | 6 | 5 | 4 | 3 | 2 | 1 | 0 |
|---|---|---|---|---|---|---|---|---|
| R | EE15 | EE14 | EE13 | EE12 | EE11 | 0 | 0 | EEON |
| W | | | | | | | | |
| Reset[1] | — | — | — | — | — | — | — | — |

1. The reset state of this register is controlled at chip integration. Please refer to the device overview section to determine the actual reset state of this register.

= Unimplemented or Reserved

**Figure 3-5. Initialization of Internal EEPROM Position Register (INITEE)**

Read: Anytime

Write: The EEON bit can be written to any time on all devices. Bits E[11:15] are “write anytime in all modes” on most devices. On some devices, bits E[11:15] are “write once in normal and emulation modes and write anytime in special modes”. See device overview chapter to determine the actual write access rights.

**NOTE**

Writes to this register take one cycle to go into effect.

This register initializes the position of the internal EEPROM within the on-chip system memory map.

**Table 3-4. INITEE Field Descriptions**

| Field | Description |
|---|---|
| 7:3<br>EE[15:11] | **Internal EEPROM Map Position** — These bits determine the upper five bits of the base address for the system’s internal EEPROM array. |
| 0<br>EEON | **Enable EEPROM** — This bit is used to enable the EEPROM memory in the memory map.<br>0 Disables the EEPROM from the memory map.<br>1 Enables the EEPROM in the memory map at the address selected by EE[15:11]. |

### 3.3.2.4 Miscellaneous System Control Register (MISC)

Module Base + 0x0013
Starting address location affected by INITRG register setting.

| | 7 | 6 | 5 | 4 | 3 | 2 | 1 | 0 |
|---|---|---|---|---|---|---|---|---|
| R | 0 | 0 | 0 | 0 | EXSTR1 | EXSTR0 | ROMHM | ROMON |
| W | | | | | | | | |
| Reset: Expanded or Emulation | 0 | 0 | 0 | 0 | 1 | 1 | 0 | —[1] |
| Reset: Peripheral or Single Chip | 0 | 0 | 0 | 0 | 1 | 1 | 0 | 1 |
| Reset: Special Test | 0 | 0 | 0 | 0 | 1 | 1 | 0 | 0 |

1. The reset state of this bit is determined at the chip integration level.

= Unimplemented or Reserved

**Figure 3-6. Miscellaneous System Control Register (MISC)**

Read: Anytime

Write: As stated in each bit description

**NOTE**

Writes to this register take one cycle to go into effect.

This register initializes miscellaneous control functions.

**Table 3-5. INITEE Field Descriptions**

| Field | Description |
|---|---|
| 3:2<br>EXSTR[1:0] | **External Access Stretch Bits 1 and 0**<br>Write: once in normal and emulation modes and anytime in special modes<br>This two-bit field determines the amount of clock stretch on accesses to the external address space as shown in Table 3-6. In single chip and peripheral modes these bits have no meaning or effect. |
| 1<br>ROMHM | **FLASH EEPROM or ROM Only in Second Half of Memory Map**<br>Write: once in normal and emulation modes and anytime in special modes<br>0 The fixed page(s) of FLASH EEPROM or ROM in the lower half of the memory map can be accessed.<br>1 Disables direct access to the FLASH EEPROM or ROM in the lower half of the memory map. These physical locations of the FLASH EEPROM or ROM remain accessible through the program page window. |
| 0<br>ROMON | **ROMON — Enable FLASH EEPROM or ROM**<br>Write: once in normal and emulation modes and anytime in special modes<br>This bit is used to enable the FLASH EEPROM or ROM memory in the memory map.<br>0 Disables the FLASH EEPROM or ROM from the memory map.<br>1 Enables the FLASH EEPROM or ROM in the memory map. |

**Table 3-6. External Stretch Bit Definition**

| Stretch Bit EXSTR1 | Stretch Bit EXSTR0 | Number of E Clocks Stretched |
|---|---|---|
| 0 | 0 | 0 |
| 0 | 1 | 1 |
| 1 | 0 | 2 |
| 1 | 1 | 3 |

### 3.3.2.5 Reserved Test Register 0 (MTST0)

Module Base + 0x0014
Starting address location affected by INITRG register setting.

| | 7 | 6 | 5 | 4 | 3 | 2 | 1 | 0 |
|---|---|---|---|---|---|---|---|---|
| R | 0 | 0 | 0 | 0 | 0 | 0 | 0 | 0 |
| W | | | | | | | | |
| Reset | 0 | 0 | 0 | 0 | 0 | 0 | 0 | 0 |

= Unimplemented or Reserved

**Figure 3-7. Reserved Test Register 0 (MTST0)**

Read: Anytime

Write: No effect — this register location is used for internal test purposes.

### 3.3.2.6 Reserved Test Register 1 (MTST1)

Module Base + 0x0017
Starting address location affected by INITRG register setting.

| | 7 | 6 | 5 | 4 | 3 | 2 | 1 | 0 |
|---|---|---|---|---|---|---|---|---|
| R | 0 | 0 | 0 | 0 | 0 | 0 | 0 | 0 |
| W | | | | | | | | |
| Reset | 0 | 0 | 0 | 1 | 0 | 0 | 0 | 0 |

= Unimplemented or Reserved

**Figure 3-8. Reserved Test Register 1 (MTST1)**

Read: Anytime

Write: No effect — this register location is used for internal test purposes.

### 3.3.2.7 Memory Size Register 0 (MEMSIZ0)

Module Base + 0x001C
Starting address location affected by INITRG register setting.

| | 7 | 6 | 5 | 4 | 3 | 2 | 1 | 0 |
|---|---|---|---|---|---|---|---|---|
| R | REG_SW0 | 0 | EEP_SW1 | EEP_SW0 | 0 | RAM_SW2 | RAM_SW1 | RAM_SW0 |
| W | | | | | | | | |
| Reset | — | — | — | — | — | — | — | — |

= Unimplemented or Reserved

**Figure 3-9. Memory Size Register 0 (MEMSIZ0)**

Read: Anytime

Write: Writes have no effect

Reset: Defined at chip integration, see device overview section.

The MEMSIZ0 register reflects the state of the register, EEPROM and RAM memory space configuration switches at the core boundary which are configured at system integration. This register allows read visibility to the state of these switches.

**Table 3-7. MEMSIZ0 Field Descriptions**

| Field | Description |
|---|---|
| 7<br>REG_SW0 | **Allocated System Register Space**<br>0 Allocated system register space size is 1K byte<br>1 Allocated system register space size is 2K byte |
| 5:4<br>EEP_SW[1:0] | **Allocated System EEPROM Memory Space** — The allocated system EEPROM memory space size is as given in Table 3-8. |
| 2<br>RAM_SW[2:0] | **Allocated System RAM Memory Space** — The allocated system RAM memory space size is as given in Table 3-9. |

**Table 3-8. Allocated EEPROM Memory Space**

| eep_sw1:eep_sw0 | Allocated EEPROM Space |
|---|---|
| 00 | 0K byte |
| 01 | 2K bytes |
| 10 | 4K bytes |
| 11 | 8K bytes |

**Table 3-9. Allocated RAM Memory Space**

| ram_sw2:ram_sw0 | Allocated RAM Space | RAM Mappable Region | INITRM Bits Used | RAM Reset Base Address(1) |
|---|---|---|---|---|
| 000 | 2K bytes | 2K bytes | RAM[15:11] | 0x0800 |
| 001 | 4K bytes | 4K bytes | RAM[15:12] | 0x0000 |
| 010 | 6K bytes | 8K bytes(2) | RAM[15:13] | 0x0800 |

**Table 3-9. Allocated RAM Memory Space (continued)**

| ram_sw2:ram_sw0 | Allocated RAM Space | RAM Mappable Region | INITRM Bits Used | RAM Reset Base Address[1] |
|---|---|---|---|---|
| 011 | 8K bytes | 8K bytes | RAM[15:13] | 0x0000 |
| 100 | 10K bytes | 16K bytes [2] | RAM[15:14] | 0x1800 |
| 101 | 12K bytes | 16K bytes [2] | RAM[15:14] | 0x1000 |
| 110 | 14K bytes | 16K bytes [2] | RAM[15:14] | 0x0800 |
| 111 | 16K bytes | 16K bytes | RAM[15:14] | 0x0000 |

1. The RAM Reset BASE Address is based on the reset value of the INITRM register, 0x0009.
2. Alignment of the Allocated RAM space within the RAM mappable region is dependent on the value of RAMHAL.

**NOTE**

As stated, the bits in this register provide read visibility to the system physical memory space allocations defined at system integration. The actual array size for any given type of memory block may differ from the allocated size. Please refer to the device overview chapter for actual sizes.

### 3.3.2.8 Memory Size Register 1 (MEMSIZ1)

Module Base + 0x001D
Starting address location affected by INITRG register setting.

| | 7 | 6 | 5 | 4 | 3 | 2 | 1 | 0 |
|---|---|---|---|---|---|---|---|---|
| R | ROM_SW1 | ROM_SW0 | 0 | 0 | 0 | 0 | PAG_SW1 | PAG_SW0 |
| W | | | | | | | | |
| Reset | — | — | — | — | — | — | — | — |

= Unimplemented or Reserved

**Figure 3-10. Memory Size Register 1 (MEMSIZ1)**

Read: Anytime

Write: Writes have no effect

Reset: Defined at chip integration, see device overview section.

The MEMSIZ1 register reflects the state of the FLASH or ROM physical memory space and paging switches at the core boundary which are configured at system integration. This register allows read visibility to the state of these switches.

**Table 3-10. MEMSIZ0 Field Descriptions**

| Field | Description |
|---|---|
| 7:6<br>ROM_SW[1:0] | **Allocated System FLASH or ROM Physical Memory Space** — The allocated system FLASH or ROM physical memory space is as given in Table 3-11. |
| 1:0<br>PAG_SW[1:0] | **Allocated Off-Chip FLASH or ROM Memory Space** — The allocated off-chip FLASH or ROM memory space size is as given in Table 3-12. |

**Table 3-11. Allocated FLASH/ROM Physical Memory Space**

| rom_sw1:rom_sw0 | Allocated FLASH or ROM Space |
|---|---|
| 00 | 0K byte |
| 01 | 16K bytes |
| 10 | 48K bytes(1) |
| 11 | 64K bytes(1) |

NOTES:

1. The ROMHM software bit in the MISC register determines the accessibility of the FLASH/ROM memory space. Please refer to Section 3.3.2.8, “Memory Size Register 1 (MEMSIZ1),” for a detailed functional description of the ROMHM bit.

**Table 3-12. Allocated Off-Chip Memory Options**

| pag_sw1:pag_sw0 | Off-Chip Space | On-Chip Space |
|---|---|---|
| 00 | 876K bytes | 128K bytes |
| 01 | 768K bytes | 256K bytes |
| 10 | 512K bytes | 512K bytes |
| 11 | 0K byte | 1M byte |

**NOTE**

As stated, the bits in this register provide read visibility to the system memory space and on-chip/off-chip partitioning allocations defined at system integration. The actual array size for any given type of memory block may differ from the allocated size. Please refer to the device overview chapter for actual sizes.

### 3.3.2.9 Program Page Index Register (PPAGE)

Module Base + 0x0030
Starting address location affected by INITRG register setting.

| | 7 | 6 | 5 | 4 | 3 | 2 | 1 | 0 |
|---|---|---|---|---|---|---|---|---|
| R | 0 | 0 | PIX5 | PIX4 | PIX3 | PIX2 | PIX1 | PIX0 |
| W | | | | | | | | |
| Reset[1] | — | — | — | — | — | — | — | — |

1. The reset state of this register is controlled at chip integration. Please refer to the device overview section to determine the actual reset state of this register.

= Unimplemented or Reserved

**Figure 3-11. Program Page Index Register (PPAGE)**

Read: Anytime

Write: Determined at chip integration. Generally it's: "write anytime in all modes;" on some devices it will be: "write only in special modes." Check specific device documentation to determine which applies.

Reset: Defined at chip integration as either 0x00 (paired with write in any mode) or 0x3C (paired with write only in special modes), see device overview chapter.

The HCS12 core architecture limits the physical address space available to 64K bytes. The program page index register allows for integrating up to 1M byte of FLASH or ROM into the system by using the six page index bits to page 16K byte blocks into the program page window located from 0x8000 to 0xBFFF as defined in Table 3-14. CALL and RTC instructions have special access to read and write this register without using the address bus.

**NOTE**

Normal writes to this register take one cycle to go into effect. Writes to this register using the special access of the CALL and RTC instructions will be complete before the end of the associated instruction.

**Table 3-13. MEMSIZ0 Field Descriptions**

| Field | Description |
|---|---|
| 5:0<br>PIX[5:0] | **Program Page Index Bits 5:0** — These page index bits are used to select which of the 64 FLASH or ROM array pages is to be accessed in the program page window as shown in Table 3-14. |

**Table 3-14. Program Page Index Register Bits**

| PIX5 | PIX4 | PIX3 | PIX2 | PIX1 | PIX0 | Program Space Selected |
|---|---|---|---|---|---|---|
| 0 | 0 | 0 | 0 | 0 | 0 | 16K page 0 |
| 0 | 0 | 0 | 0 | 0 | 1 | 16K page 1 |
| 0 | 0 | 0 | 0 | 1 | 0 | 16K page 2 |
| 0 | 0 | 0 | 0 | 1 | 1 | 16K page 3 |
| . . . . . | . . . . . | . . . . | . . . . . | . . . . . | . . . . . | . . . . . |
| 1 | 1 | 1 | 1 | 0 | 0 | 16K page 60 |
| 1 | 1 | 1 | 1 | 0 | 1 | 16K page 61 |
| 1 | 1 | 1 | 1 | 1 | 0 | 16K page 62 |
| 1 | 1 | 1 | 1 | 1 | 1 | 16K page 63 |

## 3.4 Functional Description

The MMC sub-block performs four basic functions of the core operation: bus control, address decoding and select signal generation, memory expansion, and security decoding for the system. Each aspect is described in the following subsections.

### 3.4.1 Bus Control

The MMC controls the address bus and data buses that interface the core with the rest of the system. This includes the multiplexing of the input data buses to the core onto the main CPU read data bus and control of data flow from the CPU to the output address and data buses of the core. In addition, the MMC manages all CPU read data bus swapping operations.

### 3.4.2 Address Decoding

As data flows on the core address bus, the MMC decodes the address information, determines whether the internal core register or firmware space, the peripheral space or a memory register or array space is being addressed and generates the correct select signal. This decoding operation also interprets the mode of operation of the system and the state of the mapping control registers in order to generate the proper select. The MMC also generates two external chip select signals, emulation chip select ($\overline{ECS}$) and external chip select ($\overline{XCS}$).

#### 3.4.2.1 Select Priority and Mode Considerations

Although internal resources such as control registers and on-chip memory have default addresses, each can be relocated by changing the default values in control registers. Normally, I/O addresses, control registers,

vector spaces, expansion windows, and on-chip memory are mapped so that their address ranges do not overlap. The MMC will make only one select signal active at any given time. This activation is based upon the priority outlined in Table 3-15. If two or more blocks share the same address space, only the select signal for the block with the highest priority will become active. An example of this is if the registers and the RAM are mapped to the same space, the registers will have priority over the RAM and the portion of RAM mapped in this shared space will not be accessible. The expansion windows have the lowest priority. This means that registers, vectors, and on-chip memory are always visible to a program regardless of the values in the page select registers.

**Table 3-15. Select Signal Priority**

| Priority | Address Space |
|---|---|
| Highest | BDM (internal to core) firmware or register space |
| ... | Internal register space |
| ... | RAM memory block |
| ... | EEPROM memory block |
| ... | On-chip FLASH or ROM |
| Lowest | Remaining external space |

In expanded modes, all address space not used by internal resources is by default external memory space. The data registers and data direction registers for ports A and B are removed from the on-chip memory map and become external accesses. If the EME bit in the MODE register (see MEBI block description chapter) is set, the data and data direction registers for port E are also removed from the on-chip memory map and become external accesses.

In special peripheral mode, the first 16 registers associated with bus expansion are removed from the on-chip memory map (PORTA, PORTB, DDRA, DDRB, PORTE, DDRE, PEAR, MODE, PUCR, RDRIV, and the EBI reserved registers).

In emulation modes, if the EMK bit in the MODE register (see MEBI block description chapter) is set, the data and data direction registers for port K are removed from the on-chip memory map and become external accesses.

### 3.4.2.2 Emulation Chip Select Signal

When the EMK bit in the MODE register (see MEBI block description chapter) is set, port K bit 7 is used as an active-low emulation chip select signal, $\overline{\text{ECS}}$. This signal is active when the system is in emulation mode, the EMK bit is set and the FLASH or ROM space is being addressed subject to the conditions outlined in Section 3.4.3.2, “Extended Address (XAB19:14) and ECS Signal Functionality.” When the EMK bit is clear, this pin is used for general purpose I/O.

### 3.4.2.3 External Chip Select Signal

When the EMK bit in the MODE register (see MEBI block description chapter) is set, port K bit 6 is used as an active-low external chip select signal, $\overline{\text{XCS}}$. This signal is active only when the $\overline{\text{ECS}}$ signal described above is not active and when the system is addressing the external address space. Accesses to

unimplemented locations within the register space or to locations that are removed from the map (i.e., ports A and B in expanded modes) will not cause this signal to become active. When the EMK bit is clear, this pin is used for general purpose I/O.

### 3.4.3 Memory Expansion

The HCS12 core architecture limits the physical address space available to 64K bytes. The program page index register allows for integrating up to 1M byte of FLASH or ROM into the system by using the six page index bits to page 16K byte blocks into the program page window located from 0x8000 to 0xBFFF in the physical memory space. The paged memory space can consist of solely on-chip memory or a combination of on-chip and off-chip memory. This partitioning is configured at system integration through the use of the paging configuration switches (*pag_sw1:pag_sw0*) at the core boundary. The options available to the integrator are as given in Table 3-16 (this table matches Table 3-12 but is repeated here for easy reference).

**Table 3-16. Allocated Off-Chip Memory Options**

| pag_sw1:pag_sw0 | Off-Chip Space | On-Chip Space |
|---|---|---|
| 00 | 876K bytes | 128K bytes |
| 01 | 768K bytes | 256K bytes |
| 10 | 512K bytes | 512K bytes |
| 11 | 0K byte | 1M byte |

Based upon the system configuration, the program page window will consider its access to be either internal or external as defined in Table 3-17.

**Table 3-17. External/Internal Page Window Access**

| pag_sw1:pag_sw0 | Partitioning | PIX5:0 Value | Page Window Access |
|---|---|---|---|
| 00 | 876K off-Chip, 128K on-Chip | 0x0000–0x0037 | External |
| | | 0x0038–0x003F | Internal |
| 01 | 768K off-chip, 256K on-chip | 0x0000–0x002F | External |
| | | 0x0030–0x003F | Internal |
| 10 | 512K off-chip, 512K on-chip | 0x0000–0x001F | External |
| | | 0x0020–0x003F | Internal |
| 11 | 0K off-chip, 1M on-chip | N/A | External |
| | | 0x0000–0x003F | Internal |

**NOTE**

The partitioning as defined in Table 3-17 applies only to the allocated memory space and the actual on-chip memory sizes implemented in the system may differ. Please refer to the device overview chapter for actual sizes.

The PPAGE register holds the page select value for the program page window. The value of the PPAGE register can be manipulated by normal read and write (some devices don't allow writes in some modes) instructions as well as the CALL and RTC instructions.

Control registers, vector spaces, and a portion of on-chip memory are located in unpaged portions of the 64K byte physical address space. The stack and I/O addresses should also be in unpaged memory to make them accessible from any page.

The starting address of a service routine must be located in unpaged memory because the 16-bit exception vectors cannot point to addresses in paged memory. However, a service routine can call other routines that are in paged memory. The upper 16K byte block of memory space (0xC000–0xFFFF) is unpaged. It is recommended that all reset and interrupt vectors point to locations in this area.

#### 3.4.3.1 CALL and Return from Call Instructions

CALL and RTC are uninterruptable instructions that automate page switching in the program expansion window. CALL is similar to a JSR instruction, but the subroutine that is called can be located anywhere in the normal 64K byte address space or on any page of program expansion memory. CALL calculates and stacks a return address, stacks the current PPAGE value, and writes a new instruction-supplied value to PPAGE. The PPAGE value controls which of the 64 possible pages is visible through the 16K byte expansion window in the 64K byte memory map. Execution then begins at the address of the called subroutine.

During the execution of a CALL instruction, the CPU:

- Writes the old PPAGE value into an internal temporary register and writes the new instruction-supplied PPAGE value into the PPAGE register.
- Calculates the address of the next instruction after the CALL instruction (the return address), and pushes this 16-bit value onto the stack.
- Pushes the old PPAGE value onto the stack.
- Calculates the effective address of the subroutine, refills the queue, and begins execution at the new address on the selected page of the expansion window.

This sequence is uninterruptable; there is no need to inhibit interrupts during CALL execution. A CALL can be performed from any address in memory to any other address.

The PPAGE value supplied by the instruction is part of the effective address. For all addressing mode variations except indexed-indirect modes, the new page value is provided by an immediate operand in the instruction. In indexed-indirect variations of CALL, a pointer specifies memory locations where the new page value and the address of the called subroutine are stored. Using indirect addressing for both the new page value and the address within the page allows values calculated at run time rather than immediate values that must be known at the time of assembly.

The RTC instruction terminates subroutines invoked by a CALL instruction. RTC unstacks the PPAGE value and the return address and refills the queue. Execution resumes with the next instruction after the CALL.

During the execution of an RTC instruction, the CPU:

- Pulls the old PPAGE value from the stack
- Pulls the 16-bit return address from the stack and loads it into the PC
- Writes the old PPAGE value into the PPAGE register
- Refills the queue and resumes execution at the return address

This sequence is uninterruptable; an RTC can be executed from anywhere in memory, even from a different page of extended memory in the expansion window.

The CALL and RTC instructions behave like JSR and RTS, except they use more execution cycles. Therefore, routinely substituting CALL/RTC for JSR/RTS is not recommended. JSR and RTS can be used to access subroutines that are on the same page in expanded memory. However, a subroutine in expanded memory that can be called from other pages must be terminated with an RTC. And the RTC unstacks a PPAGE value. So any access to the subroutine, even from the same page, must use a CALL instruction so that the correct PPAGE value is in the stack.

### 3.4.3.2 Extended Address (XAB19:14) and $\overline{\text{ECS}}$ Signal Functionality

If the EMK bit in the MODE register is set (see MEBI block description chapter) the PIX5:0 values will be output on XAB19:14 respectively (port K bits 5:0) when the system is addressing within the physical program page window address space (0x8000–0xBFFF) and is in an expanded mode. When addressing anywhere else within the physical address space (outside of the paging space), the XAB19:14 signals will be assigned a constant value based upon the physical address space selected. In addition, the active-low emulation chip select signal, $\overline{\text{ECS}}$, will likewise function based upon the assigned memory allocation. In the cases of 48K byte and 64K byte allocated physical FLASH/ROM space, the operation of the $\overline{\text{ECS}}$ signal will additionally depend upon the state of the ROMHM bit (see Section 3.3.2.4, “Miscellaneous System Control Register (MISC)”) in the MISC register. Table 3-18, Table 3-19, Table 3-20, and Table 3-21 summarize the functionality of these signals based upon the allocated memory configuration. Again, this signal information is only available externally when the EMK bit is set and the system is in an expanded mode.

**Table 3-18. 0K Byte Physical FLASH/ROM Allocated**

| Address Space | Page Window Access | ROMHM | ECS | XAB19:14 |
|---|---|---|---|---|
| 0x0000–0x3FFF | N/A | N/A | 1 | 0x3D |
| 0x4000–0x7FFF | N/A | N/A | 1 | 0x3E |
| 0x8000–0xBFFF | N/A | N/A | 0 | PIX[5:0] |
| 0xC000–0xFFFF | N/A | N/A | 0 | 0x3F |

**Table 3-19. 16K Byte Physical FLASH/ROM Allocated**

| Address Space | Page Window Access | ROMHM | ECS | XAB19:14 |
|---|---|---|---|---|
| 0x0000–0x3FFF | N/A | N/A | 1 | 0x3D |
| 0x4000–0x7FFF | N/A | N/A | 1 | 0x3E |
| 0x8000–0xBFFF | N/A | N/A | 1 | PIX[5:0] |
| 0xC000–0xFFFF | N/A | N/A | 0 | 0x3F |

**Table 3-20. 48K Byte Physical FLASH/ROM Allocated**

| Address Space | Page Window Access | ROMHM | ECS | XAB19:14 |
|---|---|---|---|---|
| 0x0000–0x3FFF | N/A | N/A | 1 | 0x3D |
| 0x4000–0x7FFF | N/A | 0 | 0 | 0x3E |
| | N/A | 1 | 1 | |
| 0x8000–0xBFFF | External | N/A | 1 | PIX[5:0] |
| | Internal | N/A | 0 | |
| 0xC000–0xFFFF | N/A | N/A | 0 | 0x3F |

**Table 3-21. 64K Byte Physical FLASH/ROM Allocated**

| Address Space | Page Window Access | ROMHM | ECS | XAB19:14 |
|---|---|---|---|---|
| 0x0000–0x3FFF | N/A | 0 | 0 | 0x3D |
| | N/A | 1 | 1 | |
| 0x4000–0x7FFF | N/A | 0 | 0 | 0x3E |
| | N/A | 1 | 1 | |
| 0x8000–0xBFFF | External | N/A | 1 | PIX[5:0] |
| | Internal | N/A | 0 | |
| 0xC000–0xFFFF | N/A | N/A | 0 | 0x3F |

A graphical example of a memory paging for a system configured as 1M byte on-chip FLASH/ROM with 64K allocated physical space is given in Figure 3-12.

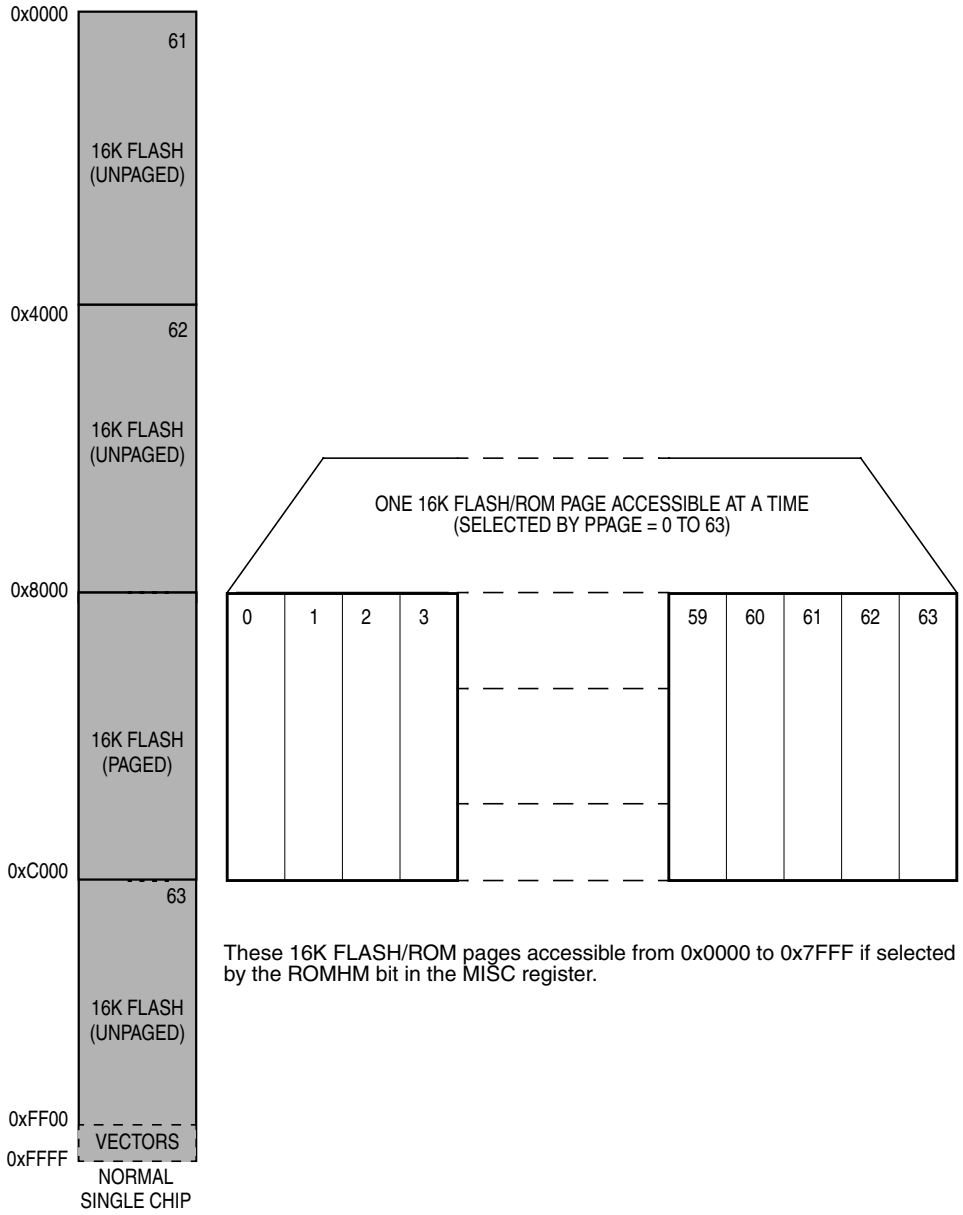


**Figure 3-12. Memory Paging Example: 1M Byte On-Chip FLASH/ROM, 64K Allocation**

# Chapter 4
# Multiplexed External Bus Interface (MEBIV3)

## 4.1 Introduction

This section describes the functionality of the multiplexed external bus interface (MEBI) sub-block of the S12 core platform. The functionality of the module is closely coupled with the S12 CPU and the memory map controller (MMC) sub-blocks.

Figure 4-1 is a block diagram of the MEBI. In Figure 4-1, the signals on the right hand side represent pins that are accessible externally. On some chips, these may not all be bonded out.

The MEBI sub-block of the core serves to provide access and/or visibility to internal core data manipulation operations including timing reference information at the external boundary of the core and/or system. Depending upon the system operating mode and the state of bits within the control registers of the MEBI, the internal 16-bit read and write data operations will be represented in 8-bit or 16-bit accesses externally. Using control information from other blocks within the system, the MEBI will determine the appropriate type of data access to be generated.

### 4.1.1 Features

The block name includes these distinctive features:

- External bus controller with four 8-bit ports A,B, E, and K
- Data and data direction registers for ports A, B, E, and K when used as general-purpose I/O
- Control register to enable/disable alternate functions on ports E and K
- Mode control register
- Control register to enable/disable pull resistors on ports A, B, E, and K
- Control register to enable/disable reduced output drive on ports A, B, E, and K
- Control register to configure external clock behavior
- Control register to configure $\overline{\text{IRQ}}$ pin operation
- Logic to capture and synchronize external interrupt pin inputs

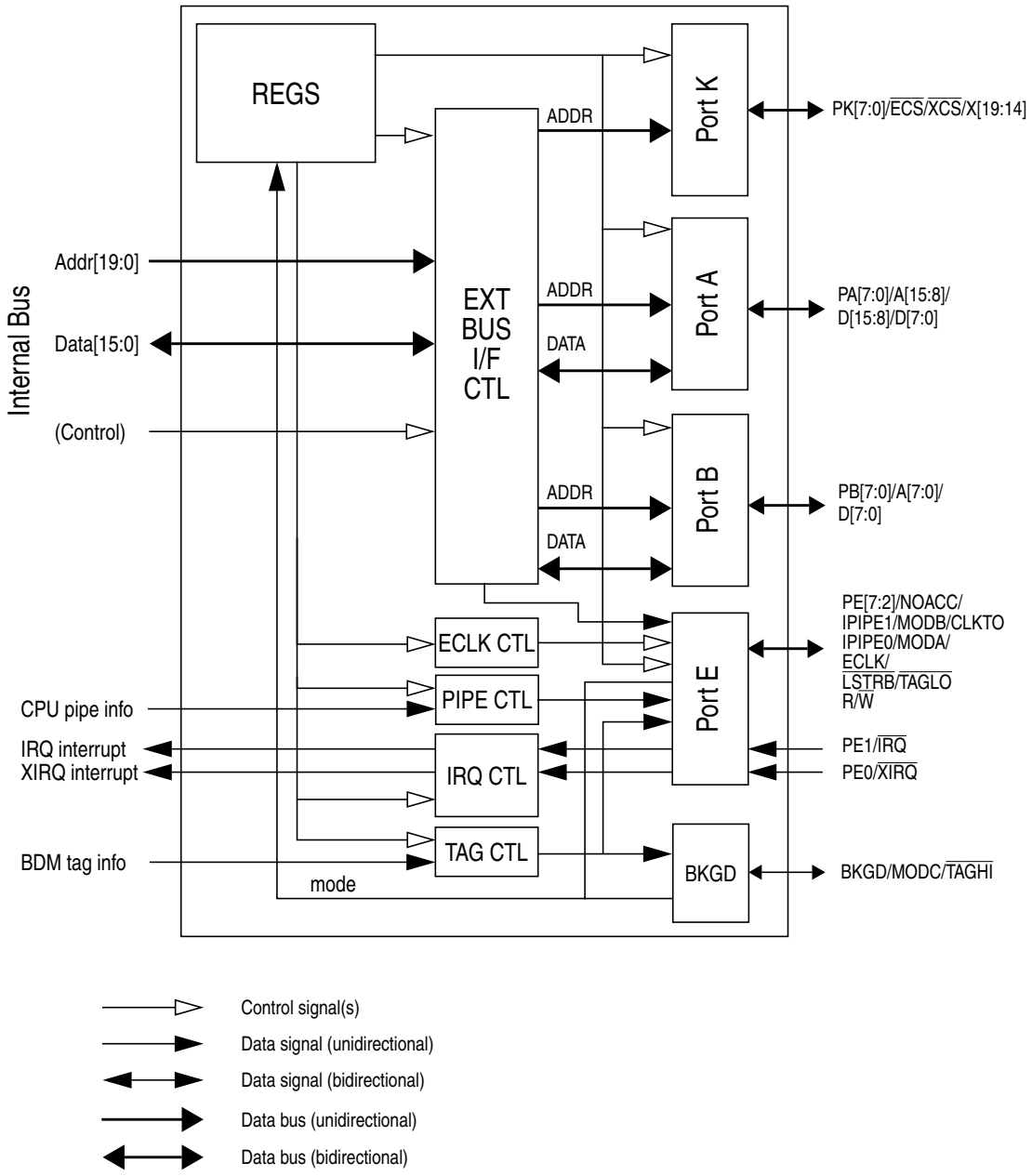


**Figure 4-1. MEBI Block Diagram**

### 4.1.2 Modes of Operation

- Normal expanded wide mode

  Ports A and B are configured as a 16-bit multiplexed address and data bus and port E provides bus control and status signals. This mode allows 16-bit external memory and peripheral devices to be interfaced to the system.
- Normal expanded narrow mode

  Ports A and B are configured as a 16-bit address bus and port A is multiplexed with 8-bit data. Port E provides bus control and status signals. This mode allows 8-bit external memory and peripheral devices to be interfaced to the system.
- Normal single-chip mode

  There is no external expansion bus in this mode. The processor program is executed from internal memory. Ports A, B, K, and most of E are available as general-purpose I/O.
- Special single-chip mode

  This mode is generally used for debugging single-chip operation, boot-strapping, or security related operations. The active background mode is in control of CPU execution and BDM firmware is waiting for additional serial commands through the BKGD pin. There is no external expansion bus after reset in this mode.
- Emulation expanded wide mode

  Developers use this mode for emulation systems in which the users target application is normal expanded wide mode.
- Emulation expanded narrow mode

  Developers use this mode for emulation systems in which the users target application is normal expanded narrow mode.
- Special test mode

  Ports A and B are configured as a 16-bit multiplexed address and data bus and port E provides bus control and status signals. In special test mode, the write protection of many control bits is lifted so that they can be thoroughly tested without needing to go through reset.
- Special peripheral mode

  This mode is intended for Freescale Semiconductor factory testing of the system. The CPU is inactive and an external (tester) bus master drives address, data, and bus control signals.

## 4.2 External Signal Description

In typical implementations, the MEBI sub-block of the core interfaces directly with external system pins. Some pins may not be bonded out in all implementations.

Table 4-1 outlines the pin names and functions and gives a brief description of their operation reset state of these pins and associated pull-ups or pull-downs is dependent on the mode of operation and on the integration of this block at the chip level (chip dependent).

**Table 4-1. External System Pins Associated With MEBI**

| Pin Name | Pin Functions | Description |
|---|---|---|
| BKGD/MODC/ $\overline{\text{TAGHI}}$ | MODC | At the rising edge on $\overline{\text{RESET}}$, the state of this pin is registered into the MODC bit to set the mode. (This pin always has an internal pullup.) |
| | BKGD | Pseudo open-drain communication pin for the single-wire background debug mode. There is an internal pull-up resistor on this pin. |
| | $\overline{\text{TAGHI}}$ | When instruction tagging is on, a 0 at the falling edge of E tags the high half of the instruction word being read into the instruction queue. |
| PA7/A15/D15/D7 thru PA0/A8/D8/D0 | PA7–PA0 | General-purpose I/O pins, see PORTA and DDRA registers. |
| | A15–A8 | High-order address lines multiplexed during ECLK low. Outputs except in special peripheral mode where they are inputs from an external tester system. |
| | D15–D8 | High-order bidirectional data lines multiplexed during ECLK high in expanded wide modes, special peripheral mode, and visible internal accesses (IVIS = 1) in emulation expanded narrow mode. Direction of data transfer is generally indicated by R/$\overline{\text{W}}$. |
| | D15/D7 thru D8/D0 | Alternate high-order and low-order bytes of the bidirectional data lines multiplexed during ECLK high in expanded narrow modes and narrow accesses in wide modes. Direction of data transfer is generally indicated by R/$\overline{\text{W}}$. |
| PB7/A7/D7 thru PB0/A0/D0 | PB7–PB0 | General-purpose I/O pins, see PORTB and DDRB registers. |
| | A7–A0 | Low-order address lines multiplexed during ECLK low. Outputs except in special peripheral mode where they are inputs from an external tester system. |
| | D7–D0 | Low-order bidirectional data lines multiplexed during ECLK high in expanded wide modes, special peripheral mode, and visible internal accesses (with IVIS = 1) in emulation expanded narrow mode. Direction of data transfer is generally indicated by R/$\overline{\text{W}}$. |
| PE7/NOACC | PE7 | General-purpose I/O pin, see PORTE and DDRE registers. |
| | NOACC | CPU No Access output. Indicates whether the current cycle is a free cycle. Only available in expanded modes. |
| PE6/IPIPE1/ MODB/CLKTO | MODB | At the rising edge of $\overline{\text{RESET}}$, the state of this pin is registered into the MODB bit to set the mode. |
| | PE6 | General-purpose I/O pin, see PORTE and DDRE registers. |
| | IPIPE1 | Instruction pipe status bit 1, enabled by PIPOE bit in PEAR. |
| | CLKTO | System clock test output. Only available in special modes. PIPOE = 1 overrides this function. The enable for this function is in the clock module. |
| PE5/IPIPE0/MODA | MODA | At the rising edge on $\overline{\text{RESET}}$, the state of this pin is registered into the MODA bit to set the mode. |
| | PE5 | General-purpose I/O pin, see PORTE and DDRE registers. |
| | IPIPE0 | Instruction pipe status bit 0, enabled by PIPOE bit in PEAR. |

**Table 4-1. External System Pins Associated With MEBI (continued)**

| Pin Name | Pin Functions | Description |
|---|---|---|
| PE4/ECLK | PE4 | General-purpose I/O pin, see PORTE and DDRE registers. |
| | ECLK | Bus timing reference clock, can operate as a free-running clock at the system clock rate or to produce one low-high clock per visible access, with the high period stretched for slow accesses. ECLK is controlled by the NECLK bit in PEAR, the IVIS bit in MODE, and the ESTR bit in EBICTL. |
| PE3/$\overline{\text{LSTRB}}$/ $\overline{\text{TAGLO}}$ | PE3 | General-purpose I/O pin, see PORTE and DDRE registers. |
| | $\overline{\text{LSTRB}}$ | Low strobe bar, 0 indicates valid data on D7–D0. |
| | SZ8 | In special peripheral mode, this pin is an input indicating the size of the data transfer (0 = 16-bit; 1 = 8-bit). |
| | $\overline{\text{TAGLO}}$ | In expanded wide mode or emulation narrow modes, when instruction tagging is on and low strobe is enabled, a 0 at the falling edge of E tags the low half of the instruction word being read into the instruction queue. |
| PE2/R/$\overline{\text{W}}$ | PE2 | General-purpose I/O pin, see PORTE and DDRE registers. |
| | R/$\overline{\text{W}}$ | Read/write, indicates the direction of internal data transfers. This is an output except in special peripheral mode where it is an input. |
| PE1/$\overline{\text{IRQ}}$ | PE1 | General-purpose input-only pin, can be read even if $\overline{\text{IRQ}}$ enabled. |
| | $\overline{\text{IRQ}}$ | Maskable interrupt request, can be level sensitive or edge sensitive. |
| PE0/$\overline{\text{XIRQ}}$ | PE0 | General-purpose input-only pin. |
| | $\overline{\text{XIRQ}}$ | Non-maskable interrupt input. |
| PK7/$\overline{\text{ECS}}$ | PK7 | General-purpose I/O pin, see PORTK and DDRK registers. |
| | $\overline{\text{ECS}}$ | Emulation chip select |
| PK6/$\overline{\text{XCS}}$ | PK6 | General-purpose I/O pin, see PORTK and DDRK registers. |
| | $\overline{\text{XCS}}$ | External data chip select |
| PK5/X19 thru PK0/X14 | PK5–PK0 | General-purpose I/O pins, see PORTK and DDRK registers. |
| | X19–X14 | Memory expansion addresses |

Detailed descriptions of these pins can be found in the device overview chapter.

## 4.3 Memory Map and Register Definition

A summary of the registers associated with the MEBI sub-block is shown in Table 4-2. Detailed descriptions of the registers and bits are given in the subsections that follow. On most chips the registers are mappable. Therefore, the upper bits may not be all 0s as shown in the table and descriptions.

### 4.3.1 Module Memory Map

**Table 4-2. MEBI Memory Map**

| Address Offset | Use | Access |
|---|---|---|
| 0x0000 | Port A Data Register (PORTA) | R/W |
| 0x0001 | Port B Data Register (PORTB) | R/W |
| 0x0002 | Data Direction Register A (DDRA) | R/W |
| 0x0003 | Data Direction Register B (DDRB) | R/W |
| 0x0004 | Reserved | R |
| 0x0005 | Reserved | R |
| 0x0006 | Reserved | R |
| 0x0007 | Reserved | R |
| 0x0008 | Port E Data Register (PORTE) | R/W |
| 0x0009 | Data Direction Register E (DDRE) | R/W |
| 0x000A | Port E Assignment Register (PEAR) | R/W |
| 0x000B | Mode Register (MODE) | R/W |
| 0x000C | Pull Control Register (PUCR) | R/W |
| 0x000D | Reduced Drive Register (RDRIV) | R/W |
| 0x000E | External Bus Interface Control Register (EBICTL) | R/W |
| 0x000F | Reserved | R |
| 0x001E | IRQ Control Register (IRQCR) | R/W |
| 0x00032 | Port K Data Register (PORTK) | R/W |
| 0x00033 | Data Direction Register K (DDRK) | R/W |

### 4.3.2 Register Descriptions

#### 4.3.2.1 Port A Data Register (PORTA)

Module Base + 0x0000
Starting address location affected by INITRG register setting.

| | 7 | 6 | 5 | 4 | 3 | 2 | 1 | 0 |
|---|---|---|---|---|---|---|---|---|
| R<br>W | Bit 7 | 6 | 5 | 4 | 3 | 2 | 1 | Bit 0 |
| Reset | 0 | 0 | 0 | 0 | 0 | 0 | 0 | 0 |
| Single Chip | PA7 | PA6 | PA5 | PA4 | PA3 | PA2 | PA1 | PA0 |
| Expanded Wide, Emulation Narrow with IVIS, and Peripheral | AB/DB15 | AB/DB14 | AB/DB13 | AB/DB12 | AB/DB11 | AB/DB10 | AB/DB9 | AB/DB8 |
| Expanded Narrow | AB15 and DB15/DB7 | AB14 and DB14/DB6 | AB13 and DB13/DB5 | AB12 and DB12/DB4 | AB11 and DB11/DB3 | AB10 and DB10/DB2 | AB9 and DB9/DB1 | AB8 and DB8/DB0 |

**Figure 4-2. Port A Data Register (PORTA)**

Read: Anytime when register is in the map

Write: Anytime when register is in the map

Port A bits 7 through 0 are associated with address lines A15 through A8 respectively and data lines D15/D7 through D8/D0 respectively. When this port is not used for external addresses such as in single-chip mode, these pins can be used as general-purpose I/O. Data direction register A (DDRA) determines the primary direction of each pin. DDRA also determines the source of data for a read of PORTA.

This register is not in the on-chip memory map in expanded and special peripheral modes. Therefore, these accesses will be echoed externally.

**NOTE**

To ensure that you read the value present on the PORTA pins, always wait at least one cycle after writing to the DDRA register before reading from the PORTA register.

### 4.3.2.2 Port B Data Register (PORTB)

Module Base + 0x0001
Starting address location affected by INITRG register setting.

| | 7 | 6 | 5 | 4 | 3 | 2 | 1 | 0 |
|---|---|---|---|---|---|---|---|---|
| R<br>W | Bit 7 | 6 | 5 | 4 | 3 | 2 | 1 | Bit 0 |
| Reset | 0 | 0 | 0 | 0 | 0 | 0 | 0 | 0 |
| Single Chip | PB7 | PB6 | PB5 | PB4 | PB3 | PB2 | PB1 | PB0 |
| Expanded Wide, Emulation Narrow with IVIS, and Peripheral | AB/DB7 | AB/DB6 | AB/DB5 | AB/DB4 | AB/DB3 | AB/DB2 | AB/DB1 | AB/DB0 |
| Expanded Narrow | AB7 | AB6 | AB5 | AB4 | AB3 | AB2 | AB1 | AB0 |

**Figure 4-3. Port A Data Register (PORTB)**

Read: Anytime when register is in the map

Write: Anytime when register is in the map

Port B bits 7 through 0 are associated with address lines A7 through A0 respectively and data lines D7 through D0 respectively. When this port is not used for external addresses, such as in single-chip mode, these pins can be used as general-purpose I/O. Data direction register B (DDRB) determines the primary direction of each pin. DDRB also determines the source of data for a read of PORTB.

This register is not in the on-chip memory map in expanded and special peripheral modes. Therefore, these accesses will be echoed externally.

**NOTE**

To ensure that you read the value present on the PORTB pins, always wait at least one cycle after writing to the DDRB register before reading from the PORTB register.

### 4.3.2.3 Data Direction Register A (DDRA)

Module Base + 0x0002
Starting address location affected by INITRG register setting.

| | 7 | 6 | 5 | 4 | 3 | 2 | 1 | 0 |
|---|---|---|---|---|---|---|---|---|
| R<br>W | Bit 7 | 6 | 5 | 4 | 3 | 2 | 1 | Bit 0 |
| Reset | 0 | 0 | 0 | 0 | 0 | 0 | 0 | 0 |

**Figure 4-4. Data Direction Register A (DDRA)**

Read: Anytime when register is in the map

Write: Anytime when register is in the map

This register controls the data direction for port A. When port A is operating as a general-purpose I/O port, DDRA determines the primary direction for each port A pin. A 1 causes the associated port pin to be an output and a 0 causes the associated pin to be a high-impedance input. The value in a DDR bit also affects the source of data for reads of the corresponding PORTA register. If the DDR bit is 0 (input) the buffered pin input state is read. If the DDR bit is 1 (output) the associated port data register bit state is read.

This register is not in the on-chip memory map in expanded and special peripheral modes. Therefore, these accesses will be echoed externally. It is reset to 0x00 so the DDR does not override the three-state control signals.

**Table 4-3. DDRA Field Descriptions**

| Field | Description |
|---|---|
| 7:0<br>DDRA | **Data Direction Port A**<br>0 Configure the corresponding I/O pin as an input<br>1 Configure the corresponding I/O pin as an output |

#### 4.3.2.4 Data Direction Register B (DDRB)

Module Base + 0x0003
Starting address location affected by INITRG register setting.

| | 7 | 6 | 5 | 4 | 3 | 2 | 1 | 0 |
|---|---|---|---|---|---|---|---|---|
| R<br>W | Bit 7 | 6 | 5 | 4 | 3 | 2 | 1 | Bit 0 |
| Reset | 0 | 0 | 0 | 0 | 0 | 0 | 0 | 0 |

**Figure 4-5. Data Direction Register B (DDRB)**

Read: Anytime when register is in the map

Write: Anytime when register is in the map

This register controls the data direction for port B. When port B is operating as a general-purpose I/O port, DDRB determines the primary direction for each port B pin. A 1 causes the associated port pin to be an output and a 0 causes the associated pin to be a high-impedance input. The value in a DDR bit also affects the source of data for reads of the corresponding PORTB register. If the DDR bit is 0 (input) the buffered pin input state is read. If the DDR bit is 1 (output) the associated port data register bit state is read.

This register is not in the on-chip memory map in expanded and special peripheral modes. Therefore, these accesses will be echoed externally. It is reset to 0x00 so the DDR does not override the three-state control signals.

**Table 4-4. DDRB Field Descriptions**

| Field | Description |
|---|---|
| 7:0<br>DDRB | **Data Direction Port B**<br>0 Configure the corresponding I/O pin as an input<br>1 Configure the corresponding I/O pin as an output |

### 4.3.2.5 Reserved Registers

Module Base + 0x0004
Starting address location affected by INITRG register setting.

| | 7 | 6 | 5 | 4 | 3 | 2 | 1 | 0 |
|---|---|---|---|---|---|---|---|---|
| R | 0 | 0 | 0 | 0 | 0 | 0 | 0 | 0 |
| W | | | | | | | | |
| Reset | 0 | 0 | 0 | 0 | 0 | 0 | 0 | 0 |

= Unimplemented or Reserved

**Figure 4-6. Reserved Register**

Module Base + 0x0005
Starting address location affected by INITRG register setting.

| | 7 | 6 | 5 | 4 | 3 | 2 | 1 | 0 |
|---|---|---|---|---|---|---|---|---|
| R | 0 | 0 | 0 | 0 | 0 | 0 | 0 | 0 |
| W | | | | | | | | |
| Reset | 0 | 0 | 0 | 0 | 0 | 0 | 0 | 0 |

= Unimplemented or Reserved

**Figure 4-7. Reserved Register**

Module Base + 0x0006
Starting address location affected by INITRG register setting.

| | 7 | 6 | 5 | 4 | 3 | 2 | 1 | 0 |
|---|---|---|---|---|---|---|---|---|
| R | 0 | 0 | 0 | 0 | 0 | 0 | 0 | 0 |
| W | | | | | | | | |
| Reset | 0 | 0 | 0 | 0 | 0 | 0 | 0 | 0 |

= Unimplemented or Reserved

**Figure 4-8. Reserved Register**

Module Base + 0x0007
Starting address location affected by INITRG register setting.

| | 7 | 6 | 5 | 4 | 3 | 2 | 1 | 0 |
|---|---|---|---|---|---|---|---|---|
| R | 0 | 0 | 0 | 0 | 0 | 0 | 0 | 0 |
| W | | | | | | | | |
| Reset | 0 | 0 | 0 | 0 | 0 | 0 | 0 | 0 |

= Unimplemented or Reserved

**Figure 4-9. Reserved Register**

These register locations are not used (reserved). All unused registers and bits in this block return logic 0s when read. Writes to these registers have no effect.

These registers are not in the on-chip map in special peripheral mode.

### 4.3.2.6 Port E Data Register (PORTE)

Module Base + 0x0008
Starting address location affected by INITRG register setting.

| | 7 | 6 | 5 | 4 | 3 | 2 | 1 | 0 |
|---|---|---|---|---|---|---|---|---|
| R/W | Bit 7 | 6 | 5 | 4 | 3 | 2 | Bit 1 | Bit 0 |
| Reset | 0 | 0 | 0 | 0 | 0 | 0 | u | u |
| Alternate Pin Function | NOACC | MODB or IPIPE1 or CLKTO | MODA or IPIPE0 | ECLK | $\overline{\text{LSTRB}}$ or $\overline{\text{TAGLO}}$ | R/$\overline{\text{W}}$ | $\overline{\text{IRQ}}$ | $\overline{\text{XIRQ}}$ |

= Unimplemented or Reserved  u = Unaffected by reset

**Figure 4-10. Port E Data Register (PORTE)**

Read: Anytime when register is in the map

Write: Anytime when register is in the map

Port E is associated with external bus control signals and interrupt inputs. These include mode select (MODB/IPIPE1, MODA/IPIPE0), E clock, size ($\overline{\text{LSTRB}}$/$\overline{\text{TAGLO}}$), read/write (R/$\overline{\text{W}}$), $\overline{\text{IRQ}}$, and $\overline{\text{XIRQ}}$. When not used for one of these specific functions, port E pins 7:2 can be used as general-purpose I/O and pins 1:0 can be used as general-purpose input. The port E assignment register (PEAR) selects the function of each pin and DDRE determines whether each pin is an input or output when it is configured to be general-purpose I/O. DDRE also determines the source of data for a read of PORTE.

Some of these pins have software selectable pull resistors. $\overline{\text{IRQ}}$ and $\overline{\text{XIRQ}}$ can only be pulled up whereas the polarity of the PE7, PE4, PE3, and PE2 pull resistors are determined by chip integration. Please refer to the device overview chapter (Signal Property Summary) to determine the polarity of these resistors. A single control bit enables the pull devices for all of these pins when they are configured as inputs.

This register is not in the on-chip map in special peripheral mode or in expanded modes when the EME bit is set. Therefore, these accesses will be echoed externally.

**NOTE**

It is unwise to write PORTE and DDRE as a word access. If you are changing port E pins from being inputs to outputs, the data may have extra transitions during the write. It is best to initialize PORTE before enabling as outputs.

**NOTE**

To ensure that you read the value present on the PORTE pins, always wait at least one cycle after writing to the DDRE register before reading from the PORTE register.

### 4.3.2.7 Data Direction Register E (DDRE)

Module Base + 0x0009
Starting address location affected by INITRG register setting.

| | 7 | 6 | 5 | 4 | 3 | 2 | 1 | 0 |
|---|---|---|---|---|---|---|---|---|
| R | Bit 7 | 6 | 5 | 4 | 3 | Bit 2 | 0 | 0 |
| W | | | | | | | | |
| Reset | 0 | 0 | 0 | 0 | 0 | 0 | 0 | 0 |

= Unimplemented or Reserved

**Figure 4-11. Data Direction Register E (DDRE)**

Read: Anytime when register is in the map

Write: Anytime when register is in the map

Data direction register E is associated with port E. For bits in port E that are configured as general-purpose I/O lines, DDRE determines the primary direction of each of these pins. A 1 causes the associated bit to be an output and a 0 causes the associated bit to be an input. Port E bit 1 (associated with $\overline{IRQ}$) and bit 0 (associated with $\overline{XIRQ}$) cannot be configured as outputs. Port E, bits 1 and 0, can be read regardless of whether the alternate interrupt function is enabled. The value in a DDR bit also affects the source of data for reads of the corresponding PORTE register. If the DDR bit is 0 (input) the buffered pin input state is read. If the DDR bit is 1 (output) the associated port data register bit state is read.

This register is not in the on-chip memory map in expanded and special peripheral modes. Therefore, these accesses will be echoed externally. Also, it is not in the map in expanded modes while the EME control bit is set.

**Table 4-5. DDRE Field Descriptions**

| Field | Description |
|---|---|
| 7:2<br>DDRE | **Data Direction Port E**<br>0 Configure the corresponding I/O pin as an input<br>1 Configure the corresponding I/O pin as an output<br>**Note:** It is unwise to write PORTE and DDRE as a word access. If you are changing port E pins from inputs to outputs, the data may have extra transitions during the write. It is best to initialize PORTE before enabling as outputs. |

### 4.3.2.8 Port E Assignment Register (PEAR)

Module Base + 0x000A
Starting address location affected by INITRG register setting.

| | 7 | 6 | 5 | 4 | 3 | 2 | 1 | 0 |
|---|---|---|---|---|---|---|---|---|
| R | NOACCE | 0 | PIPOE | NECLK | LSTRE | RDWE | 0 | 0 |
| W | | | | | | | | |
| Reset | | | | | | | | |
| Special Single Chip | 0 | 0 | 0 | 0 | 0 | 0 | 0 | 0 |
| Special Test | 0 | 0 | 1 | 0 | 1 | 1 | 0 | 0 |
| Peripheral | 0 | 0 | 0 | 0 | 0 | 0 | 0 | 0 |
| Emulation Expanded Narrow | 1 | 0 | 1 | 0 | 1 | 1 | 0 | 0 |
| Emulation Expanded Wide | 1 | 0 | 1 | 0 | 1 | 1 | 0 | 0 |
| Normal Single Chip | 0 | 0 | 0 | 1 | 0 | 0 | 0 | 0 |
| Normal Expanded Narrow | 0 | 0 | 0 | 0 | 0 | 0 | 0 | 0 |
| Normal Expanded Wide | 0 | 0 | 0 | 0 | 0 | 0 | 0 | 0 |

= Unimplemented or Reserved

**Figure 4-12. Port E Assignment Register (PEAR)**

Read: Anytime (provided this register is in the map).

Write: Each bit has specific write conditions. Please refer to the descriptions of each bit on the following pages.

Port E serves as general-purpose I/O or as system and bus control signals. The PEAR register is used to choose between the general-purpose I/O function and the alternate control functions. When an alternate control function is selected, the associated DDRE bits are overridden.

The reset condition of this register depends on the mode of operation because bus control signals are needed immediately after reset in some modes. In normal single-chip mode, no external bus control signals are needed so all of port E is configured for general-purpose I/O. In normal expanded modes, only the E clock is configured for its alternate bus control function and the other bits of port E are configured for general-purpose I/O. As the reset vector is located in external memory, the E clock is required for this access. R/$\overline{W}$ is only needed by the system when there are external writable resources. If the normal expanded system needs any other bus control signals, PEAR would need to be written before any access that needed the additional signals. In special test and emulation modes, IPIPE1, IPIPE0, E, $\overline{LSTRB}$, and R/$\overline{W}$ are configured out of reset as bus control signals.

This register is not in the on-chip memory map in expanded and special peripheral modes. Therefore, these accesses will be echoed externally.

**Table 4-6. PEAR Field Descriptions**

| Field | Description |
|---|---|
| 7<br>NOACCE | **CPU No Access Output Enable**<br>Normal: write once<br>Emulation: write never<br>Special: write anytime<br>1 The associated pin (port E, bit 7) is general-purpose I/O.<br>0 The associated pin (port E, bit 7) is output and indicates whether the cycle is a CPU free cycle.<br>This bit has no effect in single-chip or special peripheral modes. |
| 5<br>PIPOE | **Pipe Status Signal Output Enable**<br>Normal: write once<br>Emulation: write never<br>Special: write anytime.<br>0 The associated pins (port E, bits 6:5) are general-purpose I/O.<br>1 The associated pins (port E, bits 6:5) are outputs and indicate the state of the instruction queue<br>This bit has no effect in single-chip or special peripheral modes. |
| 4<br>NECLK | **No External E Clock**<br>Normal and special: write anytime<br>Emulation: write never<br>0 The associated pin (port E, bit 4) is the external E clock pin. External E clock is free-running if ESTR = 0<br>1 The associated pin (port E, bit 4) is a general-purpose I/O pin.<br>External E clock is available as an output in all modes. |
| 3<br>LSTRE | **Low Strobe ($\overline{\text{LSTRB}}$) Enable**<br>Normal: write once<br>Emulation: write never<br>Special: write anytime.<br>0 The associated pin (port E, bit 3) is a general-purpose I/O pin.<br>1 The associated pin (port E, bit 3) is configured as the $\overline{\text{LSTRB}}$ bus control output. If BDM tagging is enabled, $\overline{\text{TAGLO}}$ is multiplexed in on the rising edge of ECLK and $\overline{\text{LSTRB}}$ is driven out on the falling edge of ECLK.<br>This bit has no effect in single-chip, peripheral, or normal expanded narrow modes.<br>**Note:** $\overline{\text{LSTRB}}$ is used during external writes. After reset in normal expanded mode, $\overline{\text{LSTRB}}$ is disabled to provide an extra I/O pin. If $\overline{\text{LSTRB}}$ is needed, it should be enabled before any external writes. External reads do not normally need $\overline{\text{LSTRB}}$ because all 16 data bits can be driven even if the system only needs 8 bits of data. |
| 2<br>RDWE | **Read/Write Enable**<br>Normal: write once<br>Emulation: write never<br>Special: write anytime<br>0 The associated pin (port E, bit 2) is a general-purpose I/O pin.<br>1 The associated pin (port E, bit 2) is configured as the R/$\overline{\text{W}}$ pin<br>This bit has no effect in single-chip or special peripheral modes.<br>**Note:** R/$\overline{\text{W}}$ is used for external writes. After reset in normal expanded mode, R/$\overline{\text{W}}$ is disabled to provide an extra I/O pin. If R/$\overline{\text{W}}$ is needed it should be enabled before any external writes. |

### 4.3.2.9 Mode Register (MODE)

Module Base + 0x000B
Starting address location affected by INITRG register setting.

| | 7 | 6 | 5 | 4 | 3 | 2 | 1 | 0 |
|---|---|---|---|---|---|---|---|---|
| R | MODC | MODB | MODA | 0 | IVIS | 0 | EMK | EME |
| W | | | | | | | | |
| Reset | | | | | | | | |
| Special Single Chip | 0 | 0 | 0 | 0 | 0 | 0 | 0 | 0 |
| Emulation Expanded Narrow | 0 | 0 | 1 | 0 | 1 | 0 | 1 | 1 |
| Special Test | 0 | 1 | 0 | 0 | 1 | 0 | 0 | 0 |
| Emulation Expanded Wide | 0 | 1 | 1 | 0 | 1 | 0 | 1 | 1 |
| Normal Single Chip | 1 | 0 | 0 | 0 | 0 | 0 | 0 | 0 |
| Normal Expanded Narrow | 1 | 0 | 1 | 0 | 0 | 0 | 0 | 0 |
| Peripheral | 1 | 1 | 0 | 0 | 0 | 0 | 0 | 0 |
| Normal Expanded Wide | 1 | 1 | 1 | 0 | 0 | 0 | 0 | 0 |

= Unimplemented or Reserved

**Figure 4-13. Mode Register (MODE)**

Read: Anytime (provided this register is in the map).

Write: Each bit has specific write conditions. Please refer to the descriptions of each bit on the following pages.

The MODE register is used to establish the operating mode and other miscellaneous functions (i.e., internal visibility and emulation of port E and K).

In special peripheral mode, this register is not accessible but it is reset as shown to system configuration features. Changes to bits in the MODE register are delayed one cycle after the write.

This register is not in the on-chip memory map in expanded and special peripheral modes. Therefore, these accesses will be echoed externally.

**Table 4-7. MODE Field Descriptions**

| Field | Description |
|---|---|
| 7:5<br>MOD[C:A] | **Mode Select Bits** — These bits indicate the current operating mode.<br>If MODA = 1, then MODC, MODB, and MODA are write never.<br>If MODC = MODA = 0, then MODC, MODB, and MODA are writable with the exception that you cannot change to or from special peripheral mode<br>If MODC = 1, MODB = 0, and MODA = 0, then MODC is write never. MODB and MODA are write once, except that you cannot change to special peripheral mode. From normal single-chip, only normal expanded narrow and normal expanded wide modes are available.<br>See Table 4-8 and Table 4-16. |
| 3<br>IVIS | **Internal Visibility (for both read and write accesses)** — This bit determines whether internal accesses generate a bus cycle that is visible on the external bus.<br>Normal: write once<br>Emulation: write never<br>Special: write anytime<br>0 No visibility of internal bus operations on external bus.<br>1 Internal bus operations are visible on external bus. |
| 1<br>EMK | **Emulate Port K**<br>Normal: write once<br>Emulation: write never<br>Special: write anytime<br>0 PORTK and DDRK are in the memory map so port K can be used for general-purpose I/O.<br>1 If in any expanded mode, PORTK and DDRK are removed from the memory map.<br>In single-chip modes, PORTK and DDRK are always in the map regardless of the state of this bit.<br>In special peripheral mode, PORTK and DDRK are never in the map regardless of the state of this bit. |
| 0<br>EME | **Emulate Port E**<br>Normal and Emulation: write never<br>Special: write anytime<br>0 PORTE and DDRE are in the memory map so port E can be used for general-purpose I/O.<br>1 If in any expanded mode or special peripheral mode, PORTE and DDRE are removed from the memory map. Removing the registers from the map allows the user to emulate the function of these registers externally.<br>In single-chip modes, PORTE and DDRE are always in the map regardless of the state of this bit. |

**Table 4-8. MODC, MODB, and MODA Write Capability[1]**

| MODC | MODB | MODA | Mode | MODx Write Capability |
|---|---|---|---|---|
| 0 | 0 | 0 | Special single chip | MODC, MODB, and MODA write anytime but not to 110[2] |
| 0 | 0 | 1 | Emulation narrow | No write |
| 0 | 1 | 0 | Special test | MODC, MODB, and MODA write anytime but not to 110[2] |
| 0 | 1 | 1 | Emulation wide | No write |
| 1 | 0 | 0 | Normal single chip | MODC write never, MODB and MODA write once but not to 110 |
| 1 | 0 | 1 | Normal expanded narrow | No write |
| 1 | 1 | 0 | Special peripheral | No write |
| 1 | 1 | 1 | Normal expanded wide | No write |

1. No writes to the MOD bits are allowed while operating in a secure mode. For more details, refer to the device overview chapter.
2. If you are in a special single-chip or special test mode and you write to this register, changing to normal single-chip mode, then one allowed write to this register remains. If you write to normal expanded or emulation mode, then no writes remain.

### 4.3.2.10 Pull Control Register (PUCR)

Module Base + 0x000C
Starting address location affected by INITRG register setting.

| | 7 | 6 | 5 | 4 | 3 | 2 | 1 | 0 |
|---|---|---|---|---|---|---|---|---|
| R | PUPKE | 0 | 0 | PUPEE | 0 | 0 | PUPBE | PUPAE |
| W | | | | | | | | |
| Reset[1] | 1 | 0 | 0 | 1 | 0 | 0 | 0 | 0 |

NOTES:
1. The default value of this parameter is shown. Please refer to the device overview chapter to determine the actual reset state of this register.

= Unimplemented or Reserved

**Figure 4-14. Pull Control Register (PUCR)**

Read: Anytime (provided this register is in the map).

Write: Anytime (provided this register is in the map).

This register is used to select pull resistors for the pins associated with the core ports. Pull resistors are assigned on a per-port basis and apply to any pin in the corresponding port that is currently configured as an input. The polarity of these pull resistors is determined by chip integration. Please refer to the device overview chapter to determine the polarity of these resistors.

This register is not in the on-chip memory map in expanded and special peripheral modes. Therefore, these accesses will be echoed externally.

**NOTE**

These bits have no effect when the associated pin(s) are outputs. (The pull resistors are inactive.)

**Table 4-9. PUCR Field Descriptions**

| Field | Description |
|---|---|
| 7<br>PUPKE | **Pull resistors Port K Enable**<br>0 Port K pull resistors are disabled.<br>1 Enable pull resistors for port K input pins. |
| 4<br>PUPEE | **Pull resistors Port E Enable**<br>0 Port E pull resistors on bits 7, 4:0 are disabled.<br>1 Enable pull resistors for port E input pins bits 7, 4:0.<br>**Note:** Pins 5 and 6 of port E have pull resistors which are only enabled during reset. This bit has no effect on these pins. |
| 1<br>PUPBE | **Pull resistors Port B Enable**<br>0 Port B pull resistors are disabled.<br>1 Enable pull resistors for all port B input pins. |
| 0<br>PUPAE | **Pull resistors Port A Enable**<br>0 Port A pull resistors are disabled.<br>1 Enable pull resistors for all port A input pins. |

### 4.3.2.11 Reduced Drive Register (RDRIV)

Module Base + 0x000D
Starting address location affected by INITRG register setting.

| | 7 | 6 | 5 | 4 | 3 | 2 | 1 | 0 |
|---|---|---|---|---|---|---|---|---|
| R | RDRK | 0 | 0 | RDPE | 0 | 0 | RDPB | RDPA |
| W | | | | | | | | |
| Reset | 0 | 0 | 0 | 0 | 0 | 0 | 0 | 0 |

= Unimplemented or Reserved

**Figure 4-15. Reduced Drive Register (RDRIV)**

Read: Anytime (provided this register is in the map)

Write: Anytime (provided this register is in the map)

This register is used to select reduced drive for the pins associated with the core ports. This gives reduced power consumption and reduced RFI with a slight increase in transition time (depending on loading). This feature would be used on ports which have a light loading. The reduced drive function is independent of which function is being used on a particular port.

This register is not in the on-chip memory map in expanded and special peripheral modes. Therefore, these accesses will be echoed externally.

**Table 4-10. RDRIV Field Descriptions**

| Field | Description |
|---|---|
| 7<br>RDRK | **Reduced Drive of Port K**<br>0 All port K output pins have full drive enabled.<br>1 All port K output pins have reduced drive enabled. |
| 4<br>RDPE | **Reduced Drive of Port E**<br>0 All port E output pins have full drive enabled.<br>1 All port E output pins have reduced drive enabled. |
| 1<br>RDPB | **Reduced Drive of Port B**<br>0 All port B output pins have full drive enabled.<br>1 All port B output pins have reduced drive enabled. |
| 0<br>RDPA | **Reduced Drive of Ports A**<br>0 All port A output pins have full drive enabled.<br>1 All port A output pins have reduced drive enabled. |

### 4.3.2.12 External Bus Interface Control Register (EBICTL)

Module Base + 0x000E
Starting address location affected by INITRG register setting.

| | 7 | 6 | 5 | 4 | 3 | 2 | 1 | 0 |
|---|---|---|---|---|---|---|---|---|
| R | 0 | 0 | 0 | 0 | 0 | 0 | 0 | ESTR |
| W | | | | | | | | |
| Reset: | | | | | | | | |
| Peripheral | 0 | 0 | 0 | 0 | 0 | 0 | 0 | 0 |
| All other modes | 0 | 0 | 0 | 0 | 0 | 0 | 0 | 1 |

= Unimplemented or Reserved

**Figure 4-16. External Bus Interface Control Register (EBICTL)**

Read: Anytime (provided this register is in the map)

Write: Refer to individual bit descriptions below

The EBICTL register is used to control miscellaneous functions (i.e., stretching of external E clock).

This register is not in the on-chip memory map in expanded and special peripheral modes. Therefore, these accesses will be echoed externally.

**Table 4-11. EBICTL Field Descriptions**

| Field | Description |
|---|---|
| 0<br>ESTR | **E Clock Stretches** — This control bit determines whether the E clock behaves as a simple free-running clock or as a bus control signal that is active only for external bus cycles.<br>Normal and Emulation: write once<br>Special: write anytime<br>0 E never stretches (always free running).<br>1 E stretches high during stretched external accesses and remains low during non-visible internal accesses. This bit has no effect in single-chip modes. |

### 4.3.2.13 Reserved Register

Module Base + 0x000F
Starting address location affected by INITRG register setting.

| | 7 | 6 | 5 | 4 | 3 | 2 | 1 | 0 |
|---|---|---|---|---|---|---|---|---|
| R | 0 | 0 | 0 | 0 | 0 | 0 | 0 | 0 |
| W | | | | | | | | |
| Reset | 0 | 0 | 0 | 0 | 0 | 0 | 0 | 0 |

= Unimplemented or Reserved

**Figure 4-17. Reserved Register**

This register location is not used (reserved). All bits in this register return logic 0s when read. Writes to this register have no effect.

This register is not in the on-chip memory map in expanded and special peripheral modes. Therefore, these accesses will be echoed externally.

### 4.3.2.14 IRQ Control Register (IRQCR)

Module Base + 0x001E
Starting address location affected by INITRG register setting.

| | 7 | 6 | 5 | 4 | 3 | 2 | 1 | 0 |
|---|---|---|---|---|---|---|---|---|
| R | IRQE | IRQEN | 0 | 0 | 0 | 0 | 0 | 0 |
| W | | | | | | | | |
| Reset | 0 | 1 | 0 | 0 | 0 | 0 | 0 | 0 |

= Unimplemented or Reserved

**Figure 4-18. IRQ Control Register (IRQCR)**

Read: See individual bit descriptions below

Write: See individual bit descriptions below

**Table 4-12. IRQCR Field Descriptions**

| Field | Description |
|---|---|
| 7<br>IRQE | **IRQ Select Edge Sensitive Only**<br>Special modes: read or write anytime<br>Normal and Emulation modes: read anytime, write once<br>0 IRQ configured for low level recognition.<br>1 IRQ configured to respond only to falling edges. Falling edges on the IRQ pin will be detected anytime IRQE = 1 and will be cleared only upon a reset or the servicing of the IRQ interrupt. |
| 6<br>IRQEN | **External IRQ Enable**<br>Normal, emulation, and special modes: read or write anytime<br>0 External IRQ pin is disconnected from interrupt logic.<br>1 External IRQ pin is connected to interrupt logic.<br>**Note:** When IRQEN = 0, the edge detect latch is disabled. |

### 4.3.2.15 Port K Data Register (PORTK)

Module Base + 0x0032
Starting address location affected by INITRG register setting.

| | 7 | 6 | 5 | 4 | 3 | 2 | 1 | 0 |
|---|---|---|---|---|---|---|---|---|
| R<br>W | Bit 7 | 6 | 5 | 4 | 3 | 2 | 1 | Bit 0 |
| Reset | 0 | 0 | 0 | 0 | 0 | 0 | 0 | 0 |
| Alternate Pin Function | $\overline{ECS}$ | $\overline{XCS}$ | XAB19 | XAB18 | XAB17 | XAB16 | XAB15 | XAB14 |

**Figure 4-19. Port K Data Register (PORTK)**

Read: Anytime

Write: Anytime

This port is associated with the internal memory expansion emulation pins. When the port is not enabled to emulate the internal memory expansion, the port pins are used as general-purpose I/O. When port K is operating as a general-purpose I/O port, DDRK determines the primary direction for each port K pin. A 1 causes the associated port pin to be an output and a 0 causes the associated pin to be a high-impedance input. The value in a DDR bit also affects the source of data for reads of the corresponding PORTK register. If the DDR bit is 0 (input) the buffered pin input is read. If the DDR bit is 1 (output) the output of the port data register is read.

This register is not in the map in peripheral or expanded modes while the EMK control bit in MODE register is set. Therefore, these accesses will be echoed externally.

When inputs, these pins can be selected to be high impedance or pulled up, based upon the state of the PUPKE bit in the PUCR register.

**Table 4-13. PORTK Field Descriptions**

| Field | Description |
|---|---|
| 7<br>Port K, Bit 7 | **Port K, Bit 7** — This bit is used as an emulation chip select signal for the emulation of the internal memory expansion, or as general-purpose I/O, depending upon the state of the EMK bit in the MODE register. While this bit is used as a chip select, the external bit will return to its de-asserted state ($V_{DD}$) for approximately 1/4 cycle just after the negative edge of ECLK, unless the external access is stretched and ECLK is free-running (ESTR bit in EBICTL = 0). See the MMC block description chapter for additional details on when this signal will be active. |
| 6<br>Port K, Bit 6 | **Port K, Bit 6** — This bit is used as an external chip select signal for most external accesses that are not selected by $\overline{ECS}$ (see the MMC block description chapter for more details), depending upon the state the of the EMK bit in the MODE register. While this bit is used as a chip select, the external pin will return to its de-asserted state ($V_{DD}$) for approximately 1/4 cycle just after the negative edge of ECLK, unless the external access is stretched and ECLK is free-running (ESTR bit in EBICTL = 0). |
| 5:0<br>Port K, Bits 5:0 | **Port K, Bits 5:0** — These six bits are used to determine which FLASH/ROM or external memory array page is being accessed. They can be viewed as expanded addresses XAB19–XAB14 of the 20-bit address used to access up to1M byte internal FLASH/ROM or external memory array. Alternatively, these bits can be used for general-purpose I/O depending upon the state of the EMK bit in the MODE register. |

### 4.3.2.16 Port K Data Direction Register (DDRK)

Module Base + 0x0033
Starting address location affected by INITRG register setting.

| | 7 | 6 | 5 | 4 | 3 | 2 | 1 | 0 |
|---|---|---|---|---|---|---|---|---|
| R<br>W | Bit 7 | 6 | 5 | 4 | 3 | 2 | 1 | Bit 0 |
| Reset | 0 | 0 | 0 | 0 | 0 | 0 | 0 | 0 |

**Figure 4-20. Port K Data Direction Register (DDRK)**

Read: Anytime

Write: Anytime

This register determines the primary direction for each port K pin configured as general-purpose I/O. This register is not in the map in peripheral or expanded modes while the EMK control bit in MODE register is set. Therefore, these accesses will be echoed externally.

**Table 4-14. EBICTL Field Descriptions**

| Field | Description |
|---|---|
| 7:0<br>DDRK | **Data Direction Port K Bits**<br>0 Associated pin is a high-impedance input<br>1 Associated pin is an output<br>**Note:** It is unwise to write PORTK and DDRK as a word access. If you are changing port K pins from inputs to outputs, the data may have extra transitions during the write. It is best to initialize PORTK before enabling as outputs.<br>**Note:** To ensure that you read the correct value from the PORTK pins, always wait at least one cycle after writing to the DDRK register before reading from the PORTK register. |

## 4.4 Functional Description

### 4.4.1 Detecting Access Type from External Signals

The external signals $\overline{LSTRB}$, R/$\overline{W}$, and AB0 indicate the type of bus access that is taking place. Accesses to the internal RAM module are the only type of access that would produce $\overline{LSTRB}$ = AB0 = 1, because the internal RAM is specifically designed to allow misaligned 16-bit accesses in a single cycle. In these cases the data for the address that was accessed is on the low half of the data bus and the data for address + 1 is on the high half of the data bus. This is summarized in Table 4-15.

**Table 4-15. Access Type vs. Bus Control Pins**

| $\overline{LSTRB}$ | AB0 | R/$\overline{W}$ | Type of Access |
|---|---|---|---|
| 1 | 0 | 1 | 8-bit read of an even address |
| 0 | 1 | 1 | 8-bit read of an odd address |
| 1 | 0 | 0 | 8-bit write of an even address |
| 0 | 1 | 0 | 8-bit write of an odd address |

**Table 4-15. Access Type vs. Bus Control Pins**

| $\overline{LSTRB}$ | AB0 | R/$\overline{W}$ | Type of Access |
|---|---|---|---|
| 0 | 0 | 1 | 16-bit read of an even address |
| 1 | 1 | 1 | 16-bit read of an odd address (low/high data swapped) |
| 0 | 0 | 0 | 16-bit write to an even address |
| 1 | 1 | 0 | 16-bit write to an odd address (low/high data swapped) |

## 4.4.2 Stretched Bus Cycles

In order to allow fast internal bus cycles to coexist in a system with slower external memory resources, the HCS12 supports the concept of stretched bus cycles (module timing reference clocks for timers and baud rate generators are not affected by this stretching). Control bits in the MISC register in the MMC sub-block of the core specify the amount of stretch (0, 1, 2, or 3 periods of the internal bus-rate clock). While stretching, the CPU state machines are all held in their current state. At this point in the CPU bus cycle, write data would already be driven onto the data bus so the length of time write data is valid is extended in the case of a stretched bus cycle. Read data would not be captured by the system until the E clock falling edge. In the case of a stretched bus cycle, read data is not required until the specified setup time before the falling edge of the stretched E clock. The chip selects, and R/$\overline{W}$ signals remain valid during the period of stretching (throughout the stretched E high time).

**NOTE**

The address portion of the bus cycle is not stretched.

## 4.4.3 Modes of Operation

The operating mode out of reset is determined by the states of the MODC, MODB, and MODA pins during reset (Table 4-16). The MODC, MODB, and MODA bits in the MODE register show the current operating mode and provide limited mode switching during operation. The states of the MODC, MODB, and MODA pins are latched into these bits on the rising edge of the reset signal.

**Table 4-16. Mode Selection**

| MODC | MODB | MODA | Mode Description |
|---|---|---|---|
| 0 | 0 | 0 | Special Single Chip, BDM allowed and ACTIVE. BDM is allowed in all other modes but a serial command is required to make BDM active. |
| 0 | 0 | 1 | Emulation Expanded Narrow, BDM allowed |
| 0 | 1 | 0 | Special Test (Expanded Wide), BDM allowed |
| 0 | 1 | 1 | Emulation Expanded Wide, BDM allowed |
| 1 | 0 | 0 | Normal Single Chip, BDM allowed |
| 1 | 0 | 1 | Normal Expanded Narrow, BDM allowed |
| 1 | 1 | 0 | Peripheral; BDM allowed but bus operations would cause bus conflicts (must not be used) |
| 1 | 1 | 1 | Normal Expanded Wide, BDM allowed |

There are two basic types of operating modes:

1. Normal modes: Some registers and bits are protected against accidental changes.
2. Special modes: Allow greater access to protected control registers and bits for special purposes such as testing.

A system development and debug feature, background debug mode (BDM), is available in all modes. In special single-chip mode, BDM is active immediately after reset.

Some aspects of Port E are not mode dependent. Bit 1 of Port E is a general purpose input or the $\overline{IRQ}$ interrupt input. $\overline{IRQ}$ can be enabled by bits in the CPU's condition codes register but it is inhibited at reset so this pin is initially configured as a simple input with a pull-up. Bit 0 of Port E is a general purpose input or the $\overline{XIRQ}$ interrupt input. $\overline{XIRQ}$ can be enabled by bits in the CPU's condition codes register but it is inhibited at reset so this pin is initially configured as a simple input with a pull-up. The ESTR bit in the EBICTL register is set to one by reset in any user mode. This assures that the reset vector can be fetched even if it is located in an external slow memory device. The PE6/MODB/IPIPE1 and PE5/MODA/IPIPE0 pins act as high-impedance mode select inputs during reset.

The following paragraphs discuss the default bus setup and describe which aspects of the bus can be changed after reset on a per mode basis.

### 4.4.3.1 Normal Operating Modes

These modes provide three operating configurations. Background debug is available in all three modes, but must first be enabled for some operations by means of a BDM background command, then activated.

#### 4.4.3.1.1 Normal Single-Chip Mode

There is no external expansion bus in this mode. All pins of Ports A, B and E are configured as general purpose I/O pins Port E bits 1 and 0 are available as general purpose input only pins with internal pull resistors enabled. All other pins of Port E are bidirectional I/O pins that are initially configured as high-impedance inputs with internal pull resistors enabled. Ports A and B are configured as high-impedance inputs with their internal pull resistors disabled.

The pins associated with Port E bits 6, 5, 3, and 2 cannot be configured for their alternate functions IPIPE1, IPIPE0, $\overline{LSTRB}$, and R/$\overline{W}$ while the MCU is in single chip modes. In single chip modes, the associated control bits PIPOE, LSTRE, and RDWE are reset to zero. Writing the opposite state into them in single chip mode does not change the operation of the associated Port E pins.

In normal single chip mode, the MODE register is writable one time. This allows a user program to change the bus mode to narrow or wide expanded mode and/or turn on visibility of internal accesses.

Port E, bit 4 can be configured for a free-running E clock output by clearing NECLK=0. Typically the only use for an E clock output while the MCU is in single chip modes would be to get a constant speed clock for use in the external application system.

#### 4.4.3.1.2 Normal Expanded Wide Mode

In expanded wide modes, Ports A and B are configured as a 16-bit multiplexed address and data bus and Port E bit 4 is configured as the E clock output signal. These signals allow external memory and peripheral devices to be interfaced to the MCU.

Port E pins other than PE4/ECLK are configured as general purpose I/O pins (initially high-impedance inputs with internal pull resistors enabled). Control bits PIPOE, NECLK, LSTRE, and RDWE in the PEAR register can be used to configure Port E pins to act as bus control outputs instead of general purpose I/O pins.

It is possible to enable the pipe status signals on Port E bits 6 and 5 by setting the PIPOE bit in PEAR, but it would be unusual to do so in this mode. Development systems where pipe status signals are monitored would typically use the special variation of this mode.

The Port E bit 2 pin can be reconfigured as the R/$\overline{W}$ bus control signal by writing “1” to the RDWE bit in PEAR. If the expanded system includes external devices that can be written, such as RAM, the RDWE bit would need to be set before any attempt to write to an external location. If there are no writable resources in the external system, PE2 can be left as a general purpose I/O pin.

The Port E bit 3 pin can be reconfigured as the $\overline{LSTRB}$ bus control signal by writing “1” to the LSTRE bit in PEAR. The default condition of this pin is a general purpose input because the $\overline{LSTRB}$ function is not needed in all expanded wide applications.

The Port E bit 4 pin is initially configured as ECLK output with stretch. The E clock output function depends upon the settings of the NECLK bit in the PEAR register, the IVIS bit in the MODE register and the ESTR bit in the EBICTL register. The E clock is available for use in external select decode logic or as a constant speed clock for use in the external application system.

#### 4.4.3.1.3 Normal Expanded Narrow Mode

This mode is used for lower cost production systems that use 8-bit wide external EPROMs or RAMs. Such systems take extra bus cycles to access 16-bit locations but this may be preferred over the extra cost of additional external memory devices.

Ports A and B are configured as a 16-bit address bus and Port A is multiplexed with data. Internal visibility is not available in this mode because the internal cycles would need to be split into two 8-bit cycles.

Since the PEAR register can only be written one time in this mode, use care to set all bits to the desired states during the single allowed write.

The PE3/$\overline{LSTRB}$ pin is always a general purpose I/O pin in normal expanded narrow mode. Although it is possible to write the LSTRE bit in PEAR to “1” in this mode, the state of LSTRE is overridden and Port E bit 3 cannot be reconfigured as the $\overline{LSTRB}$ output.

It is possible to enable the pipe status signals on Port E bits 6 and 5 by setting the PIPOE bit in PEAR, but it would be unusual to do so in this mode. LSTRB would also be needed to fully understand system activity. Development systems where pipe status signals are monitored would typically use special expanded wide mode or occasionally special expanded narrow mode.

The PE4/ECLK pin is initially configured as ECLK output with stretch. The E clock output function depends upon the settings of the NECLK bit in the PEAR register, the IVIS bit in the MODE register and the ESTR bit in the EBICTL register. In normal expanded narrow mode, the E clock is available for use in external select decode logic or as a constant speed clock for use in the external application system.

The PE2/R/W pin is initially configured as a general purpose input with an internal pull resistor enabled but this pin can be reconfigured as the R/$\overline{W}$ bus control signal by writing “1” to the RDWE bit in PEAR. If the expanded narrow system includes external devices that can be written such as RAM, the RDWE bit would need to be set before any attempt to write to an external location. If there are no writable resources in the external system, PE2 can be left as a general purpose I/O pin.

#### 4.4.3.1.4 Emulation Expanded Wide Mode

In expanded wide modes, Ports A and B are configured as a 16-bit multiplexed address and data bus and Port E provides bus control and status signals. These signals allow external memory and peripheral devices to be interfaced to the MCU. These signals can also be used by a logic analyzer to monitor the progress of application programs.

The bus control related pins in Port E (PE7/NOACC, PE6/MODB/IPIPE1, PE5/MODA/IPIPE0, PE4/ECLK, PE3/$\overline{LSTRB}$/$\overline{TAGLO}$, and PE2/R/$\overline{W}$) are all configured to serve their bus control output functions rather than general purpose I/O. Notice that writes to the bus control enable bits in the PEAR register in emulation mode are restricted.

#### 4.4.3.1.5 Emulation Expanded Narrow Mode

Expanded narrow modes are intended to allow connection of single 8-bit external memory devices for lower cost systems that do not need the performance of a full 16-bit external data bus. Accesses to internal resources that have been mapped external (i.e. PORTA, PORTB, DDRA, DDRB, PORTE, DDRE, PEAR, PUCR, RDRIV) will be accessed with a 16-bit data bus on Ports A and B. Accesses of 16-bit external words to addresses which are normally mapped external will be broken into two separate 8-bit accesses using Port A as an 8-bit data bus. Internal operations continue to use full 16-bit data paths. They are only visible externally as 16-bit information if IVIS=1.

Ports A and B are configured as multiplexed address and data output ports. During external accesses, address A15, data D15 and D7 are associated with PA7, address A0 is associated with PB0 and data D8 and D0 are associated with PA0. During internal visible accesses and accesses to internal resources that have been mapped external, address A15 and data D15 is associated with PA7 and address A0 and data D0 is associated with PB0.

The bus control related pins in Port E (PE7/NOACC, PE6/MODB/IPIPE1, PE5/MODA/IPIPE0, PE4/ECLK, PE3/$\overline{LSTRB}$/$\overline{TAGLO}$, and PE2/R/$\overline{W}$) are all configured to serve their bus control output functions rather than general purpose I/O. Notice that writes to the bus control enable bits in the PEAR register in emulation mode are restricted.

The main difference between special modes and normal modes is that some of the bus control and system control signals cannot be written in emulation modes.

#### 4.4.3.2 Special Operating Modes

There are two special operating modes that correspond to normal operating modes. These operating modes are commonly used in factory testing and system development.

##### 4.4.3.2.1 Special Single-Chip Mode

When the MCU is reset in this mode, the background debug mode is enabled and active. The MCU does not fetch the reset vector and execute application code as it would in other modes. Instead the active background mode is in control of CPU execution and BDM firmware is waiting for additional serial commands through the BKGD pin. When a serial command instructs the MCU to return to normal execution, the system will be configured as described below unless the reset states of internal control registers have been changed through background commands after the MCU was reset.

There is no external expansion bus after reset in this mode. Ports A and B are initially simple bidirectional I/O pins that are configured as high-impedance inputs with internal pull resistors disabled; however, writing to the mode select bits in the MODE register (which is allowed in special modes) can change this after reset. All of the Port E pins (except PE4/ECLK) are initially configured as general purpose high-impedance inputs with internal pull resistors enabled. PE4/ECLK is configured as the E clock output in this mode.

The pins associated with Port E bits 6, 5, 3, and 2 cannot be configured for their alternate functions IPIPE1, IPIPE0, $\overline{\text{LSTRB}}$, and R/$\overline{\text{W}}$ while the MCU is in single chip modes. In single chip modes, the associated control bits PIPOE, LSTRE and RDWE are reset to zero. Writing the opposite value into these bits in single chip mode does not change the operation of the associated Port E pins.

Port E, bit 4 can be configured for a free-running E clock output by clearing NECLK=0. Typically the only use for an E clock output while the MCU is in single chip modes would be to get a constant speed clock for use in the external application system.

##### 4.4.3.2.2 Special Test Mode

In expanded wide modes, Ports A and B are configured as a 16-bit multiplexed address and data bus and Port E provides bus control and status signals. In special test mode, the write protection of many control bits is lifted so that they can be thoroughly tested without needing to go through reset.

#### 4.4.3.3 Test Operating Mode

There is a test operating mode in which an external master, such as an I.C. tester, can control the on-chip peripherals.

##### 4.4.3.3.1 Peripheral Mode

This mode is intended for factory testing of the MCU. In this mode, the CPU is inactive and an external (tester) bus master drives address, data and bus control signals in through Ports A, B and E. In effect, the whole MCU acts as if it was a peripheral under control of an external CPU. This allows faster testing of on-chip memory and peripherals than previous testing methods. Since the mode control register is not accessible in peripheral mode, the only way to change to another mode is to reset the MCU into a different

mode. Background debugging should not be used while the MCU is in special peripheral mode as internal bus conflicts between BDM and the external master can cause improper operation of both functions.

### 4.4.4 Internal Visibility

Internal visibility is available when the MCU is operating in expanded wide modes or emulation narrow mode. It is not available in single-chip, peripheral or normal expanded narrow modes. Internal visibility is enabled by setting the IVIS bit in the MODE register.

If an internal access is made while E, R/$\overline{W}$, and $\overline{LSTRB}$ are configured as bus control outputs and internal visibility is off (IVIS=0), E will remain low for the cycle, R/$\overline{W}$ will remain high, and address, data and the $\overline{LSTRB}$ pins will remain at their previous state.

When internal visibility is enabled (IVIS=1), certain internal cycles will be blocked from going external. During cycles when the BDM is selected, R/$\overline{W}$ will remain high, data will maintain its previous state, and address and $\overline{LSTRB}$ pins will be updated with the internal value. During CPU no access cycles when the BDM is not driving, R/$\overline{W}$ will remain high, and address, data and the $\overline{LSTRB}$ pins will remain at their previous state.

**NOTE**

When the system is operating in a secure mode, internal visibility is not available (i.e., IVIS = 1 has no effect). Also, the IPIPE signals will not be visible, regardless of operating mode. IPIPE1–IPIPE0 will display 0es if they are enabled. In addition, the MOD bits in the MODE control register cannot be written.

### 4.4.5 Low-Power Options

The MEBI does not contain any user-controlled options for reducing power consumption. The operation of the MEBI in low-power modes is discussed in the following subsections.

#### 4.4.5.1 Operation in Run Mode

The MEBI does not contain any options for reducing power in run mode; however, the external addresses are conditioned to reduce power in single-chip modes. Expanded bus modes will increase power consumption.

#### 4.4.5.2 Operation in Wait Mode

The MEBI does not contain any options for reducing power in wait mode.

#### 4.4.5.3 Operation in Stop Mode

The MEBI will cease to function after execution of a CPU STOP instruction.

# Chapter 5
# Interrupt (INTV1) Block Description

## 5.1 Introduction

This section describes the functionality of the interrupt (INT) sub-block of the S12 core platform.

A block diagram of the interrupt sub-block is shown in Figure 5-1.

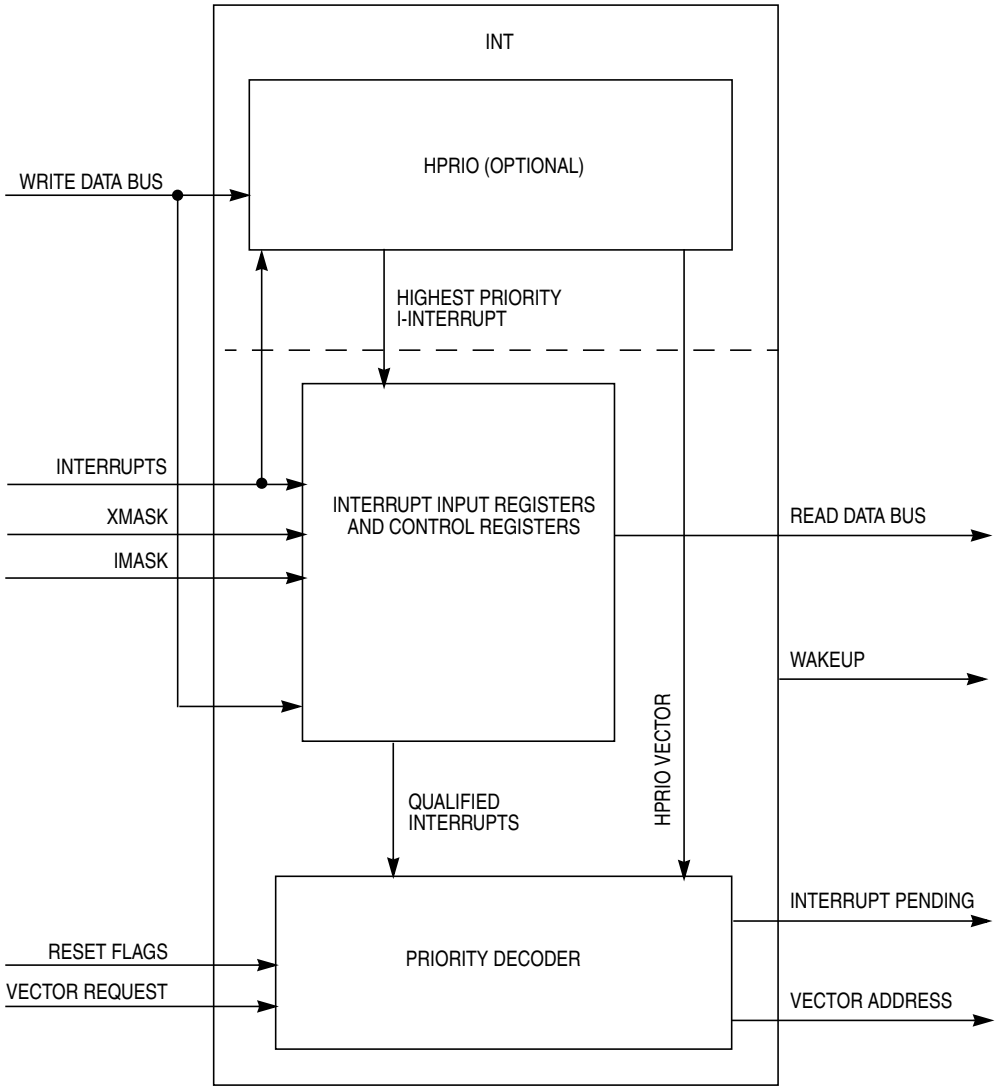


**Figure 5-1. INTV1 Block Diagram**

The interrupt sub-block decodes the priority of all system exception requests and provides the applicable vector for processing the exception. The INT supports I-bit maskable and X-bit maskable interrupts, a non-maskable unimplemented opcode trap, a non-maskable software interrupt (SWI) or background debug mode request, and three system reset vector requests. All interrupt related exception requests are managed by the interrupt sub-block (INT).

### 5.1.1 Features

The INT includes these features:

- Provides two to 122 I-bit maskable interrupt vectors (0xFF00–0xFFF2)
- Provides one X-bit maskable interrupt vector (0xFFF4)
- Provides a non-maskable software interrupt (SWI) or background debug mode request vector (0xFFF6)
- Provides a non-maskable unimplemented opcode trap (TRAP) vector (0xFFF8)
- Provides three system reset vectors (0xFFFA–0xFFFE) (reset, CMR, and COP)
- Determines the appropriate vector and drives it onto the address bus at the appropriate time
- Signals the CPU that interrupts are pending
- Provides control registers which allow testing of interrupts
- Provides additional input signals which prevents requests for servicing I and X interrupts
- Wakes the system from stop or wait mode when an appropriate interrupt occurs or whenever $\overline{\text{XIRQ}}$ is active, even if $\overline{\text{XIRQ}}$ is masked
- Provides asynchronous path for all I and X interrupts, (0xFF00–0xFFF4)
- (Optional) selects and stores the highest priority I interrupt based on the value written into the HPRIO register

### 5.1.2 Modes of Operation

The functionality of the INT sub-block in various modes of operation is discussed in the subsections that follow.

- **Normal operation**

  The INT operates the same in all normal modes of operation.
- **Special operation**

  Interrupts may be tested in special modes through the use of the interrupt test registers.
- **Emulation modes**

  The INT operates the same in emulation modes as in normal modes.
- **Low power modes**

  See Section 5.4.1, “Low-Power Modes,” for details

## 5.2 External Signal Description

Most interfacing with the interrupt sub-block is done within the core. However, the interrupt does receive direct input from the multiplexed external bus interface (MEBI) sub-block of the core for the $\overline{IRQ}$ and $\overline{XIRQ}$ pin data.

## 5.3 Memory Map and Register Definition

Detailed descriptions of the registers and associated bits are given in the subsections that follow.

### 5.3.1 Module Memory Map

**Table 5-1. INT Memory Map**

| Address Offset | Use | Access |
|---|---|---|
| 0x0015 | Interrupt Test Control Register (ITCR) | R/W |
| 0x0016 | Interrupt Test Registers (ITEST) | R/W |
| 0x001F | Highest Priority Interrupt (Optional) (HPRIO) | R/W |

### 5.3.2 Register Descriptions

#### 5.3.2.1 Interrupt Test Control Register

Module Base + 0x0015
Starting address location affected by INITRG register setting.

| | 7 | 6 | 5 | 4 | 3 | 2 | 1 | 0 |
|---|---|---|---|---|---|---|---|---|
| R | 0 | 0 | 0 | WRTINT | ADR3 | ADR2 | ADR1 | ADR0 |
| W | | | | | | | | |
| Reset | 0 | 0 | 0 | 0 | 1 | 1 | 1 | 1 |

= Unimplemented or Reserved

**Figure 5-2. Interrupt Test Control Register (ITCR)**

Read: See individual bit descriptions

Write: See individual bit descriptions

**Table 5-2. ITCR Field Descriptions**

| Field | Description |
|---|---|
| 4<br>WRTINT | **Write to the Interrupt Test Registers**<br>Read: anytime<br>Write: only in special modes and with I-bit mask and X-bit mask set.<br>0 Disables writes to the test registers; reads of the test registers will return the state of the interrupt inputs.<br>1 Disconnect the interrupt inputs from the priority decoder and use the values written into the ITEST registers instead.<br>**Note:** Any interrupts which are pending at the time that WRTINT is set will remain until they are overwritten. |
| 3:0<br>ADR[3:0] | **Test Register Select Bits**<br>Read: anytime<br>Write: anytime<br>These bits determine which test register is selected on a read or write. The hexadecimal value written here will be the same as the upper nibble of the lower byte of the vector selects. That is, an “F” written into ADR[3:0] will select vectors 0xFFFE–0xFFF0 while a “7” written to ADR[3:0] will select vectors 0xFF7E–0xFF70. |

### 5.3.2.2 Interrupt Test Registers

Module Base + 0x0016
Starting address location affected by INITRG register setting.

| | 7 | 6 | 5 | 4 | 3 | 2 | 1 | 0 |
|---|---|---|---|---|---|---|---|---|
| R<br>W | INTE | INTC | INTA | INT8 | INT6 | INT4 | INT2 | INT0 |
| Reset | 0 | 0 | 0 | 0 | 0 | 0 | 0 | 0 |

= Unimplemented or Reserved

**Figure 5-3. Interrupt TEST Registers (ITEST)**

Read: Only in special modes. Reads will return either the state of the interrupt inputs of the interrupt sub-block (WRTINT = 0) or the values written into the TEST registers (WRTINT = 1). Reads will always return 0s in normal modes.

Write: Only in special modes and with WRTINT = 1 and CCR I mask = 1.

**Table 5-3. ITEST Field Descriptions**

| Field | Description |
|---|---|
| 7:0<br>INT[E:0] | **Interrupt TEST Bits** — These registers are used in special modes for testing the interrupt logic and priority independent of the system configuration. Each bit is used to force a specific interrupt vector by writing it to a logic 1 state. Bits are named INTE through INT0 to indicate vectors 0xFFxE through 0xFFx0. These bits can be written only in special modes and only with the WRTINT bit set (logic 1) in the interrupt test control register (ITCR). In addition, I interrupts must be masked using the I bit in the CCR. In this state, the interrupt input lines to the interrupt sub-block will be disconnected and interrupt requests will be generated only by this register. These bits can also be read in special modes to view that an interrupt requested by a system block (such as a peripheral block) has reached the INT module.<br>There is a test register implemented for every eight interrupts in the overall system. All of the test registers share the same address and are individually selected using the value stored in the ADR[3:0] bits of the interrupt test control register (ITCR).<br>**Note:** When ADR[3:0] have the value of 0x000F, only bits 2:0 in the ITEST register will be accessible. That is, vectors higher than 0xFFF4 cannot be tested using the test registers and bits 7:3 will always read as a logic 0. If ADR[3:0] point to an unimplemented test register, writes will have no effect and reads will always return a logic 0 value. |

### 5.3.2.3 Highest Priority I Interrupt (Optional)

Module Base + 0x001F
Starting address location affected by INITRG register setting.

| | 7 | 6 | 5 | 4 | 3 | 2 | 1 | 0 |
|---|---|---|---|---|---|---|---|---|
| R<br>W | PSEL7 | PSEL6 | PSEL5 | PSEL4 | PSEL3 | PSEL2 | PSEL1 | 0 |
| Reset | 1 | 1 | 1 | 1 | 0 | 0 | 1 | 0 |

= Unimplemented or Reserved

**Figure 5-4. Highest Priority I Interrupt Register (HPRIO)**

Read: Anytime

Write: Only if I mask in CCR = 1

**Table 5-4. HPRIO Field Descriptions**

| Field | Description |
|---|---|
| 7:1<br>PSEL[7:1] | **Highest Priority I Interrupt Select Bits** — The state of these bits determines which I-bit maskable interrupt will be promoted to highest priority (of the I-bit maskable interrupts). To promote an interrupt, the user writes the least significant byte of the associated interrupt vector address to this register. If an unimplemented vector address or a non I-bit masked vector address (value higher than 0x00F2) is written, IRQ (0xFFF2) will be the default highest priority interrupt. |

## 5.4 Functional Description

The interrupt sub-block processes all exception requests made by the CPU. These exceptions include interrupt vector requests and reset vector requests. Each of these exception types and their overall priority level is discussed in the subsections below.

### 5.4.1 Low-Power Modes

The INT does not contain any user-controlled options for reducing power consumption. The operation of the INT in low-power modes is discussed in the following subsections.

#### 5.4.1.1 Operation in Run Mode

The INT does not contain any options for reducing power in run mode.

#### 5.4.1.2 Operation in Wait Mode

Clocks to the INT can be shut off during system wait mode and the asynchronous interrupt path will be used to generate the wake-up signal upon recognition of a valid interrupt or any $\overline{\text{XIRQ}}$ request.

#### 5.4.1.3 Operation in Stop Mode

Clocks to the INT can be shut off during system stop mode and the asynchronous interrupt path will be used to generate the wake-up signal upon recognition of a valid interrupt or any $\overline{\text{XIRQ}}$ request.

## 5.5 Resets

The INT supports three system reset exception request types: normal system reset or power-on-reset request, crystal monitor reset request, and COP watchdog reset request. The type of reset exception request must be decoded by the system and the proper request made to the core. The INT will then provide the service routine address for the type of reset requested.

## 5.6 Interrupts

As shown in the block diagram in Figure 5-1, the INT contains a register block to provide interrupt status and control, an optional highest priority I interrupt (HPRIO) block, and a priority decoder to evaluate whether pending interrupts are valid and assess their priority.

### 5.6.1 Interrupt Registers

The INT registers are accessible only in special modes of operation and function as described in Section 5.3.2.1, “Interrupt Test Control Register,” and Section 5.3.2.2, “Interrupt Test Registers,” previously.

### 5.6.2 Highest Priority I-Bit Maskable Interrupt

When the optional HPRIO block is implemented, the user is allowed to promote a single I-bit maskable interrupt to be the highest priority I interrupt. The HPRIO evaluates all interrupt exception requests and passes the HPRIO vector to the priority decoder if the highest priority I interrupt is active. RTI replaces the promoted interrupt source.

### 5.6.3 Interrupt Priority Decoder

The priority decoder evaluates all interrupts pending and determines their validity and priority. When the CPU requests an interrupt vector, the decoder will provide the vector for the highest priority interrupt request. Because the vector is not supplied until the CPU requests it, it is possible that a higher priority interrupt request could override the original exception that caused the CPU to request the vector. In this case, the CPU will receive the highest priority vector and the system will process this exception instead of the original request.

**NOTE**

Care must be taken to ensure that all exception requests remain active until the system begins execution of the applicable service routine; otherwise, the exception request may not be processed.

If for any reason the interrupt source is unknown (e.g., an interrupt request becomes inactive after the interrupt has been recognized but prior to the vector request), the vector address will default to that of the last valid interrupt that existed during the particular interrupt sequence. If the CPU requests an interrupt vector when there has never been a pending interrupt request, the INT will provide the software interrupt (SWI) vector address.

## 5.7 Exception Priority

The priority (from highest to lowest) and address of all exception vectors issued by the INT upon request by the CPU is shown in Table 5-5.

**Table 5-5. Exception Vector Map and Priority**

| Vector Address | Source |
|---|---|
| 0xFFFE–0xFFFF | System reset |
| 0xFFFC–0xFFFD | Crystal monitor reset |
| 0xFFFA–0xFFFB | COP reset |
| 0xFFF8–0xFFF9 | Unimplemented opcode trap |
| 0xFFF6–0xFFF7 | Software interrupt instruction (SWI) or BDM vector request |
| 0xFFF4–0xFFF5 | $\overline{\text{XIRQ}}$ signal |
| 0xFFF2–0xFFF3 | $\overline{\text{IRQ}}$ signal |
| 0xFFF0–0xFF00 | Device-specific I-bit maskable interrupt sources (priority in descending order) |

# Chapter 6
# Background Debug Module (BDMV4) Block Description

## 6.1 Introduction

This section describes the functionality of the background debug module (BDM) sub-block of the HCS12 core platform.

A block diagram of the BDM is shown in Figure 6-1.

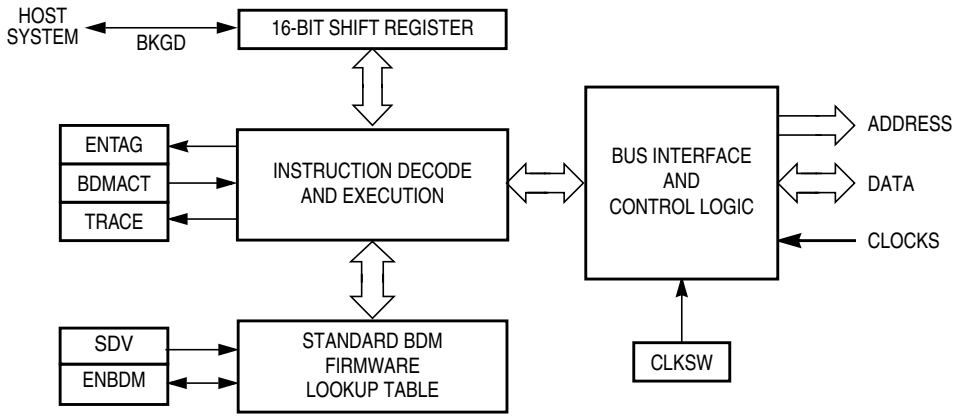


**Figure 6-1. BDM Block Diagram**

The background debug module (BDM) sub-block is a single-wire, background debug system implemented in on-chip hardware for minimal CPU intervention. All interfacing with the BDM is done via the BKGD pin.

BDMV4 has enhanced capability for maintaining synchronization between the target and host while allowing more flexibility in clock rates. This includes a sync signal to show the clock rate and a handshake signal to indicate when an operation is complete. The system is backwards compatible with older external interfaces.

### 6.1.1 Features

- Single-wire communication with host development system
- BDMV4 (and BDM2): Enhanced capability for allowing more flexibility in clock rates
- BDMV4: SYNC command to determine communication rate
- BDMV4: GO_UNTIL command
- BDMV4: Hardware handshake protocol to increase the performance of the serial communication
- Active out of reset in special single-chip mode

- Nine hardware commands using free cycles, if available, for minimal CPU intervention
- Hardware commands not requiring active BDM
- 15 firmware commands execute from the standard BDM firmware lookup table
- Instruction tagging capability
- Software control of BDM operation during wait mode
- Software selectable clocks
- When secured, hardware commands are allowed to access the register space in special single-chip mode, if the FLASH and EEPROM erase tests fail.

## 6.1.2 Modes of Operation

BDM is available in all operating modes but must be enabled before firmware commands are executed. Some system peripherals may have a control bit which allows suspending the peripheral function during background debug mode.

### 6.1.2.1 Regular Run Modes

All of these operations refer to the part in run mode. The BDM does not provide controls to conserve power during run mode.

- Normal operation

  General operation of the BDM is available and operates the same in all normal modes.
- Special single-chip mode

  In special single-chip mode, background operation is enabled and active out of reset. This allows programming a system with blank memory.
- Special peripheral mode

  BDM is enabled and active immediately out of reset. BDM can be disabled by clearing the BDMACT bit in the BDM status (BDMSTS) register. The BDM serial system should not be used in special peripheral mode.

  **NOTE**

  The BDM serial system should not be used in special peripheral mode since the CPU, which in other modes interfaces with the BDM to relinquish control of the bus during a free cycle or a steal operation, is not operating in this mode.
- Emulation modes

  General operation of the BDM is available and operates the same as in normal modes.

### 6.1.2.2 Secure Mode Operation

If the part is in secure mode, the operation of the BDM is reduced to a small subset of its regular run mode operation. Secure operation prevents access to FLASH or EEPROM other than allowing erasure.

## 6.2 External Signal Description

A single-wire interface pin is used to communicate with the BDM system. Two additional pins are used for instruction tagging. These pins are part of the multiplexed external bus interface (MEBI) sub-block and all interfacing between the MEBI and BDM is done within the core interface boundary. Functional descriptions of the pins are provided below for completeness.

- BKGD — Background interface pin
- $\overline{\text{TAGHI}}$ — High byte instruction tagging pin
- $\overline{\text{TAGLO}}$ — Low byte instruction tagging pin
- BKGD and $\overline{\text{TAGHI}}$ share the same pin.
- $\overline{\text{TAGLO}}$ and $\overline{\text{LSTRB}}$ share the same pin.

**NOTE**

Generally these pins are shared as described, but it is best to check the device overview chapter to make certain. All MCUs at the time of this writing have followed this pin sharing scheme.

### 6.2.1 BKGD — Background Interface Pin

Debugging control logic communicates with external devices serially via the single-wire background interface pin (BKGD). During reset, this pin is a mode select input which selects between normal and special modes of operation. After reset, this pin becomes the dedicated serial interface pin for the background debug mode.

### 6.2.2 $\overline{\text{TAGHI}}$ — High Byte Instruction Tagging Pin

This pin is used to tag the high byte of an instruction. When instruction tagging is on, a logic 0 at the falling edge of the external clock (ECLK) tags the high half of the instruction word being read into the instruction queue.

### 6.2.3 $\overline{\text{TAGLO}}$ — Low Byte Instruction Tagging Pin

This pin is used to tag the low byte of an instruction. When instruction tagging is on and low strobe is enabled, a logic 0 at the falling edge of the external clock (ECLK) tags the low half of the instruction word being read into the instruction queue.

## 6.3 Memory Map and Register Definition

A summary of the registers associated with the BDM is shown in Figure 6-2. Registers are accessed by host-driven communications to the BDM hardware using READ_BD and WRITE_BD commands. Detailed descriptions of the registers and associated bits are given in the subsections that follow.

### 6.3.1 Module Memory Map

**Table 6-1. INT Memory Map**

| Register Address | Use | Access |
|---|---|---|
| 0xFF00 | Reserved | — |
| 0xFF01 | BDM Status Register (BDMSTS) | R/W |
| 0xFF02–0xFF05 | Reserved | — |
| 0xFF06 | BDM CCR Holding Register (BDMCCR) | R/W |
| 0xFF07 | BDM Internal Register Position (BDMINR) | R |
| 0xFF08–0xFF0B | Reserved | — |

## 6.3.2 Register Descriptions

| Register Name | | Bit 7 | 6 | 5 | 4 | 3 | 2 | 1 | Bit 0 |
|---|---|---|---|---|---|---|---|---|---|
| 0xFF00 Reserved | R | X | X | X | X | X | X | 0 | 0 |
| | W | | | | | | | | |
| 0xFF01 BDMSTS | R | ENBDM | BDMACT | ENTAG | SDV | TRACE | CLKSW | UNSEC | 0 |
| | W | | | | | | | | |
| 0xFF02 Reserved | R | X | X | X | X | X | X | X | X |
| | W | | | | | | | | |
| 0xFF03 Reserved | R | X | X | X | X | X | X | X | X |
| | W | | | | | | | | |
| 0xFF04 Reserved | R | X | X | X | X | X | X | X | X |
| | W | | | | | | | | |
| 0xFF05 Reserved | R | X | X | X | X | X | X | X | X |
| | W | | | | | | | | |
| 0xFF06 BDMCCR | R | CCR7 | CCR6 | CCR5 | CCR4 | CCR3 | CCR2 | CCR1 | CCR0 |
| | W | | | | | | | | |
| 0xFF07 BDMINR | R | 0 | REG14 | REG13 | REG12 | REG11 | 0 | 0 | 0 |
| | W | | | | | | | | |
| 0xFF08 Reserved | R | 0 | 0 | 0 | 0 | 0 | 0 | 0 | 0 |
| | W | | | | | | | | |
| 0xFF09 Reserved | R | 0 | 0 | 0 | 0 | 0 | 0 | 0 | 0 |
| | W | | | | | | | | |
| 0xFF0A Reserved | R | X | X | X | X | X | X | X | X |
| | W | | | | | | | | |
| 0xFF0B Reserved | R | X | X | X | X | X | X | X | X |
| | W | | | | | | | | |

| | | | |
|---|---|---|---|
| | = Unimplemented, Reserved | | = Implemented (do not alter) |
| X | = Indeterminate | 0 | = Always read zero |

**Figure 6-2. BDM Register Summary**

### 6.3.2.1 BDM Status Register (BDMSTS)

0xFF01

| | 7 | 6 | 5 | 4 | 3 | 2 | 1 | 0 |
|---|---|---|---|---|---|---|---|---|
| R | ENBDM | BDMACT | ENTAG | SDV | TRACE | CLKSW | UNSEC | 0 |
| W | | | | | | | | |
| Reset: | | | | | | | | |
| Special single-chip mode: | 1[1] | 1 | 0 | 0 | 0 | 0 | 0[2] | 0 |
| Special peripheral mode: | 0 | 1 | 0 | 0 | 0 | 0 | 0 | 0 |
| All other modes: | 0 | 1 | 0 | 0 | 0 | 0 | 0 | 0 |
| | 0 | 0 | 0 | 0 | 0 | 0 | 0 | 0 |

= Unimplemented or Reserved  = Implemented (do not alter)

**Figure 6-3. BDM Status Register (BDMSTS)**

**Note:**
1. ENBDM is read as "1" by a debugging environment in Special single-chip mode when the device is not secured or secured but fully erased (Flash and EEPROM).This is because the ENBDM bit is set by the standard firmware before a BDM command can be fully transmitted and executed.

2. UNSEC is read as "1" by a debugging environment in Special single-chip mode when the device is secured and fully erased, else it is "0" and can only be read if not secure (see also bit description).

Read: All modes through BDM operation

Write: All modes but subject to the following:

- BDMACT can only be set by BDM hardware upon entry into BDM. It can only be cleared by the standard BDM firmware lookup table upon exit from BDM active mode.
- CLKSW can only be written via BDM hardware or standard BDM firmware write commands.
- All other bits, while writable via BDM hardware or standard BDM firmware write commands, should only be altered by the BDM hardware or standard firmware lookup table as part of BDM command execution.
- ENBDM should only be set via a BDM hardware command if the BDM firmware commands are needed. (This does not apply in special single-chip mode).

**Table 6-2. BDMSTS Field Descriptions**

| Field | Description |
|---|---|
| 7<br>ENBDM | **Enable BDM** — This bit controls whether the BDM is enabled or disabled. When enabled, BDM can be made active to allow firmware commands to be executed. When disabled, BDM cannot be made active but BDM hardware commands are allowed.<br>0 BDM disabled<br>1 BDM enabled<br>**Note:** ENBDM is set by the firmware immediately out of reset in special single-chip mode. In secure mode, this bit will not be set by the firmware until after the EEPROM and FLASH erase verify tests are complete. |
| 6<br>BDMACT | **BDM Active Status** — This bit becomes set upon entering BDM. The standard BDM firmware lookup table is then enabled and put into the memory map. BDMACT is cleared by a carefully timed store instruction in the standard BDM firmware as part of the exit sequence to return to user code and remove the BDM memory from the map.<br>0 BDM not active<br>1 BDM active |
| 5<br>ENTAG | **Tagging Enable** — This bit indicates whether instruction tagging in enabled or disabled. It is set when the TAGGO command is executed and cleared when BDM is entered. The serial system is disabled and the tag function enabled 16 cycles after this bit is written. BDM cannot process serial commands while tagging is active.<br>0 Tagging not enabled or BDM active<br>1 Tagging enabled |
| 4<br>SDV | **Shift Data Valid** — This bit is set and cleared by the BDM hardware. It is set after data has been transmitted as part of a firmware read command or after data has been received as part of a firmware write command. It is cleared when the next BDM command has been received or BDM is exited. SDV is used by the standard BDM firmware to control program flow execution.<br>0 Data phase of command not complete<br>1 Data phase of command is complete |
| 3<br>TRACE | **TRACE1 BDM Firmware Command is Being Executed** — This bit gets set when a BDM TRACE1 firmware command is first recognized. It will stay set as long as continuous back-to-back TRACE1 commands are executed. This bit will get cleared when the next command that is not a TRACE1 command is recognized.<br>0 TRACE1 command is not being executed<br>1 TRACE1 command is being executed |

**Table 6-2. BDMSTS Field Descriptions (continued)**

| Field | Description |
|---|---|
| 2<br>CLKSW | **Clock Switch** — The CLKSW bit controls which clock the BDM operates with. It is only writable from a hardware BDM command. A 150 cycle delay at the clock speed that is active during the data portion of the command will occur before the new clock source is guaranteed to be active. The start of the next BDM command uses the new clock for timing subsequent BDM communications.<br>Table 6-3 shows the resulting BDM clock source based on the CLKSW and the PLLSEL (Pll select from the clock and reset generator) bits.<br>**Note:** The BDM alternate clock source can only be selected when CLKSW = 0 and PLLSEL = 1. The BDM serial interface is now fully synchronized to the alternate clock source, when enabled. This eliminates frequency restriction on the alternate clock which was required on previous versions. Refer to the device overview section to determine which clock connects to the alternate clock source input.<br>**Note:** If the acknowledge function is turned on, changing the CLKSW bit will cause the ACK to be at the new rate for the write command which changes it. |
| 1<br>UNSEC | **Unsecure** — This bit is only writable in special single-chip mode from the BDM secure firmware and always gets reset to zero. It is in a zero state as secure mode is entered so that the secure BDM firmware lookup table is enabled and put into the memory map along with the standard BDM firmware lookup table.<br>The secure BDM firmware lookup table verifies that the on-chip EEPROM and FLASH EEPROM are erased. This being the case, the UNSEC bit is set and the BDM program jumps to the start of the standard BDM firmware lookup table and the secure BDM firmware lookup table is turned off. If the erase test fails, the UNSEC bit will not be asserted.<br>0 System is in a secured mode<br>1 System is in a unsecured mode<br>**Note:** When UNSEC is set, security is off and the user can change the state of the secure bits in the on-chip FLASH EEPROM. Note that if the user does not change the state of the bits to “unsecured” mode, the system will be secured again when it is next taken out of reset. |

**Table 6-3. BDM Clock Sources**

| PLLSEL | CLKSW | BDMCLK |
|---|---|---|
| 0 | 0 | Bus clock |
| 0 | 1 | Bus clock |
| 1 | 0 | Alternate clock (refer to the device overview chapter to determine the alternate clock source) |
| 1 | 1 | Bus clock dependent on the PLL |

### 6.3.2.2 BDM CCR Holding Register (BDMCCR)

0xFF06

| | 7 | 6 | 5 | 4 | 3 | 2 | 1 | 0 |
|---|---|---|---|---|---|---|---|---|
| R/W | CCR7 | CCR6 | CCR5 | CCR4 | CCR3 | CCR2 | CCR1 | CCR0 |
| Reset | 0 | 0 | 0 | 0 | 0 | 0 | 0 | 0 |

**Figure 6-4. BDM CCR Holding Register (BDMCCR)**

Read: All modes

Write: All modes

**NOTE**

When BDM is made active, the CPU stores the value of the CCR register in the BDMCCR register. However, out of special single-chip reset, the BDMCCR is set to 0xD8 and not 0xD0 which is the reset value of the CCR register.

When entering background debug mode, the BDM CCR holding register is used to save the contents of the condition code register of the user's program. It is also used for temporary storage in the standard BDM firmware mode. The BDM CCR holding register can be written to modify the CCR value.

### 6.3.2.3 BDM Internal Register Position Register (BDMINR)

0xFF07

| | 7 | 6 | 5 | 4 | 3 | 2 | 1 | 0 |
|---|---|---|---|---|---|---|---|---|
| R | 0 | REG14 | REG13 | REG12 | REG11 | 0 | 0 | 0 |
| W | | | | | | | | |
| Reset | 0 | 0 | 0 | 0 | 0 | 0 | 0 | 0 |

= Unimplemented or Reserved

**Figure 6-5. BDM Internal Register Position (BDMINR)**

Read: All modes

Write: Never

**Table 6-4. BDMINR Field Descriptions**

| Field | Description |
|---|---|
| 6:3<br>REG[14:11] | **Internal Register Map Position** — These four bits show the state of the upper five bits of the base address for the system's relocatable register block. BDMINR is a shadow of the INITRG register which maps the register block to any 2K byte space within the first 32K bytes of the 64K byte address space. |

## 6.4 Functional Description

The BDM receives and executes commands from a host via a single wire serial interface. There are two types of BDM commands, namely, hardware commands and firmware commands.

Hardware commands are used to read and write target system memory locations and to enter active background debug mode, see Section 6.4.3, “BDM Hardware Commands.” Target system memory includes all memory that is accessible by the CPU.

Firmware commands are used to read and write CPU resources and to exit from active background debug mode, see Section 6.4.4, “Standard BDM Firmware Commands.” The CPU resources referred to are the accumulator (D), X index register (X), Y index register (Y), stack pointer (SP), and program counter (PC).

Hardware commands can be executed at any time and in any mode excluding a few exceptions as highlighted, see Section 6.4.3, “BDM Hardware Commands.” Firmware commands can only be executed when the system is in active background debug mode (BDM).

### 6.4.1 Security

If the user resets into special single-chip mode with the system secured, a secured mode BDM firmware lookup table is brought into the map overlapping a portion of the standard BDM firmware lookup table. The secure BDM firmware verifies that the on-chip EEPROM and FLASH EEPROM are erased. This being the case, the UNSEC bit will get set. The BDM program jumps to the start of the standard BDM firmware and the secured mode BDM firmware is turned off and all BDM commands are allowed. If the EEPROM or FLASH do not verify as erased, the BDM firmware sets the ENBDM bit, without asserting UNSEC, and the firmware enters a loop. This causes the BDM hardware commands to become enabled, but does not enable the firmware commands. This allows the BDM hardware to be used to erase the EEPROM and FLASH. After execution of the secure firmware, regardless of the results of the erase tests, the CPU registers, INITEE and PPAGE, will no longer be in their reset state.

### 6.4.2 Enabling and Activating BDM

The system must be in active BDM to execute standard BDM firmware commands. BDM can be activated only after being enabled. BDM is enabled by setting the ENBDM bit in the BDM status (BDMSTS) register. The ENBDM bit is set by writing to the BDM status (BDMSTS) register, via the single-wire interface, using a hardware command such as WRITE_BD_BYTE.

After being enabled, BDM is activated by one of the following[1]:

- Hardware BACKGROUND command
- BDM external instruction tagging mechanism
- CPU BGND instruction
- Breakpoint sub-block’s force or tag mechanism[2]

When BDM is activated, the CPU finishes executing the current instruction and then begins executing the firmware in the standard BDM firmware lookup table. When BDM is activated by the breakpoint sub-

1. BDM is enabled and active immediately out of special single-chip reset.
2. This method is only available on systems that have a a breakpoint or a debug sub-block.

block, the type of breakpoint used determines if BDM becomes active before or after execution of the next instruction.

**NOTE**

If an attempt is made to activate BDM before being enabled, the CPU resumes normal instruction execution after a brief delay. If BDM is not enabled, any hardware BACKGROUND commands issued are ignored by the BDM and the CPU is not delayed.

In active BDM, the BDM registers and standard BDM firmware lookup table are mapped to addresses 0xFF00 to 0xFFFF. BDM registers are mapped to addresses 0xFF00 to 0xFF07. The BDM uses these registers which are readable anytime by the BDM. However, these registers are not readable by user programs.

### 6.4.3 BDM Hardware Commands

Hardware commands are used to read and write target system memory locations and to enter active background debug mode. Target system memory includes all memory that is accessible by the CPU such as on-chip RAM, EEPROM, FLASH EEPROM, I/O and control registers, and all external memory.

Hardware commands are executed with minimal or no CPU intervention and do not require the system to be in active BDM for execution, although they can continue to be executed in this mode. When executing a hardware command, the BDM sub-block waits for a free CPU bus cycle so that the background access does not disturb the running application program. If a free cycle is not found within 128 clock cycles, the CPU is momentarily frozen so that the BDM can steal a cycle. When the BDM finds a free cycle, the operation does not intrude on normal CPU operation provided that it can be completed in a single cycle. However, if an operation requires multiple cycles the CPU is frozen until the operation is complete, even though the BDM found a free cycle.

The BDM hardware commands are listed in Table 6-5.

**Table 6-5. Hardware Commands**

| Command | Opcode (hex) | Data | Description |
|---|---|---|---|
| BACKGROUND | 90 | None | Enter background mode if firmware is enabled. If enabled, an ACK will be issued when the part enters active background mode. |
| ACK_ENABLE | D5 | None | Enable handshake. Issues an ACK pulse after the command is executed. |
| ACK_DISABLE | D6 | None | Disable handshake. This command does not issue an ACK pulse. |
| READ_BD_BYTE | E4 | 16-bit address<br>16-bit data out | Read from memory with standard BDM firmware lookup table in map. Odd address data on low byte; even address data on high byte. |
| READ_BD_WORD | EC | 16-bit address<br>16-bit data out | Read from memory with standard BDM firmware lookup table in map. Must be aligned access. |
| READ_BYTE | E0 | 16-bit address<br>16-bit data out | Read from memory with standard BDM firmware lookup table out of map. Odd address data on low byte; even address data on high byte. |
| READ_WORD | E8 | 16-bit address<br>16-bit data out | Read from memory with standard BDM firmware lookup table out of map. Must be aligned access. |
| WRITE_BD_BYTE | C4 | 16-bit address<br>16-bit data in | Write to memory with standard BDM firmware lookup table in map. Odd address data on low byte; even address data on high byte. |
| WRITE_BD_WORD | CC | 16-bit address<br>16-bit data in | Write to memory with standard BDM firmware lookup table in map. Must be aligned access. |
| WRITE_BYTE | C0 | 16-bit address<br>16-bit data in | Write to memory with standard BDM firmware lookup table out of map. Odd address data on low byte; even address data on high byte. |
| WRITE_WORD | C8 | 16-bit address<br>16-bit data in | Write to memory with standard BDM firmware lookup table out of map. Must be aligned access. |

NOTE:
If enabled, ACK will occur when data is ready for transmission for all BDM READ commands and will occur after the write is complete for all BDM WRITE commands.

The READ_BD and WRITE_BD commands allow access to the BDM register locations. These locations are not normally in the system memory map but share addresses with the application in memory. To distinguish between physical memory locations that share the same address, BDM memory resources are enabled just for the READ_BD and WRITE_BD access cycle. This allows the BDM to access BDM locations unobtrusively, even if the addresses conflict with the application memory map.

### 6.4.4 Standard BDM Firmware Commands

Firmware commands are used to access and manipulate CPU resources. The system must be in active BDM to execute standard BDM firmware commands, see Section 6.4.2, “Enabling and Activating BDM.” Normal instruction execution is suspended while the CPU executes the firmware located in the standard BDM firmware lookup table. The hardware command BACKGROUND is the usual way to activate BDM.

As the system enters active BDM, the standard BDM firmware lookup table and BDM registers become visible in the on-chip memory map at 0xFF00–0xFFFF, and the CPU begins executing the standard BDM

firmware. The standard BDM firmware watches for serial commands and executes them as they are received.

The firmware commands are shown in Table 6-6.

**Table 6-6. Firmware Commands**

| Command[1] | Opcode (hex) | Data | Description |
|---|---|---|---|
| READ_NEXT | 62 | 16-bit data out | Increment X by 2 (X = X + 2), then read word X points to. |
| READ_PC | 63 | 16-bit data out | Read program counter. |
| READ_D | 64 | 16-bit data out | Read D accumulator. |
| READ_X | 65 | 16-bit data out | Read X index register. |
| READ_Y | 66 | 16-bit data out | Read Y index register. |
| READ_SP | 67 | 16-bit data out | Read stack pointer. |
| WRITE_NEXT | 42 | 16-bit data in | Increment X by 2 (X = X + 2), then write word to location pointed to by X. |
| WRITE_PC | 43 | 16-bit data in | Write program counter. |
| WRITE_D | 44 | 16-bit data in | Write D accumulator. |
| WRITE_X | 45 | 16-bit data in | Write X index register. |
| WRITE_Y | 46 | 16-bit data in | Write Y index register. |
| WRITE_SP | 47 | 16-bit data in | Write stack pointer. |
| GO | 08 | None | Go to user program. If enabled, ACK will occur when leaving active background mode. |
| GO_UNTIL[2] | 0C | None | Go to user program. If enabled, ACK will occur upon returning to active background mode. |
| TRACE1 | 10 | None | Execute one user instruction then return to active BDM. If enabled, ACK will occur upon returning to active background mode. |
| TAGGO | 18 | None | Enable tagging and go to user program. There is no ACK pulse related to this command. |

1. If enabled, ACK will occur when data is ready for transmission for all BDM READ commands and will occur after the write is complete for all BDM WRITE commands.
2. Both WAIT (with clocks to the S12 CPU core disabled) and STOP disable the ACK function. The GO_UNTIL command will not get an Acknowledge if one of these two CPU instructions occurs before the “UNTIL” instruction. This can be a problem for any instruction that uses ACK, but GO_UNTIL is a lot more difficult for the development tool to time-out.

### 6.4.5 BDM Command Structure

Hardware and firmware BDM commands start with an 8-bit opcode followed by a 16-bit address and/or a 16-bit data word depending on the command. All the read commands return 16 bits of data despite the byte or word implication in the command name.

**NOTE**

8-bit reads return 16-bits of data, of which, only one byte will contain valid data. If reading an even address, the valid data will appear in the MSB. If reading an odd address, the valid data will appear in the LSB.

**NOTE**

16-bit misaligned reads and writes are not allowed. If attempted, the BDM will ignore the least significant bit of the address and will assume an even address from the remaining bits.

For hardware data read commands, the external host must wait 150 bus clock cycles after sending the address before attempting to obtain the read data. This is to be certain that valid data is available in the BDM shift register, ready to be shifted out. For hardware write commands, the external host must wait 150 bus clock cycles after sending the data to be written before attempting to send a new command. This is to avoid disturbing the BDM shift register before the write has been completed. The 150 bus clock cycle delay in both cases includes the maximum 128 cycle delay that can be incurred as the BDM waits for a free cycle before stealing a cycle.

For firmware read commands, the external host should wait 44 bus clock cycles after sending the command opcode and before attempting to obtain the read data. This includes the potential of an extra 7 cycles when the access is external with a narrow bus access (+1 cycle) and / or a stretch (+1, 2, or 3 cycles), (7 cycles could be needed if both occur). The 44 cycle wait allows enough time for the requested data to be made available in the BDM shift register, ready to be shifted out.

**NOTE**

This timing has increased from previous BDM modules due to the new capability in which the BDM serial interface can potentially run faster than the bus. On previous BDM modules this extra time could be hidden within the serial time.

For firmware write commands, the external host must wait 32 bus clock cycles after sending the data to be written before attempting to send a new command. This is to avoid disturbing the BDM shift register before the write has been completed.

The external host should wait 64 bus clock cycles after a TRACE1 or GO command before starting any new serial command. This is to allow the CPU to exit gracefully from the standard BDM firmware lookup table and resume execution of the user code. Disturbing the BDM shift register prematurely may adversely affect the exit from the standard BDM firmware lookup table.

**NOTE**

If the bus rate of the target processor is unknown or could be changing, it is recommended that the ACK (acknowledge function) be used to indicate when an operation is complete. When using ACK, the delay times are automated.

Figure 6-6 represents the BDM command structure. The command blocks illustrate a series of eight bit times starting with a falling edge. The bar across the top of the blocks indicates that the BKGD line idles in the high state. The time for an 8-bit command is $8 \times 16$ target clock cycles.[1]

1. Target clock cycles are cycles measured using the target MCU's serial clock rate. See Section 6.4.6, "BDM Serial Interface," and Section 6.3.2.1, "BDM Status Register (BDMSTS)," for information on how serial clock rate is selected.

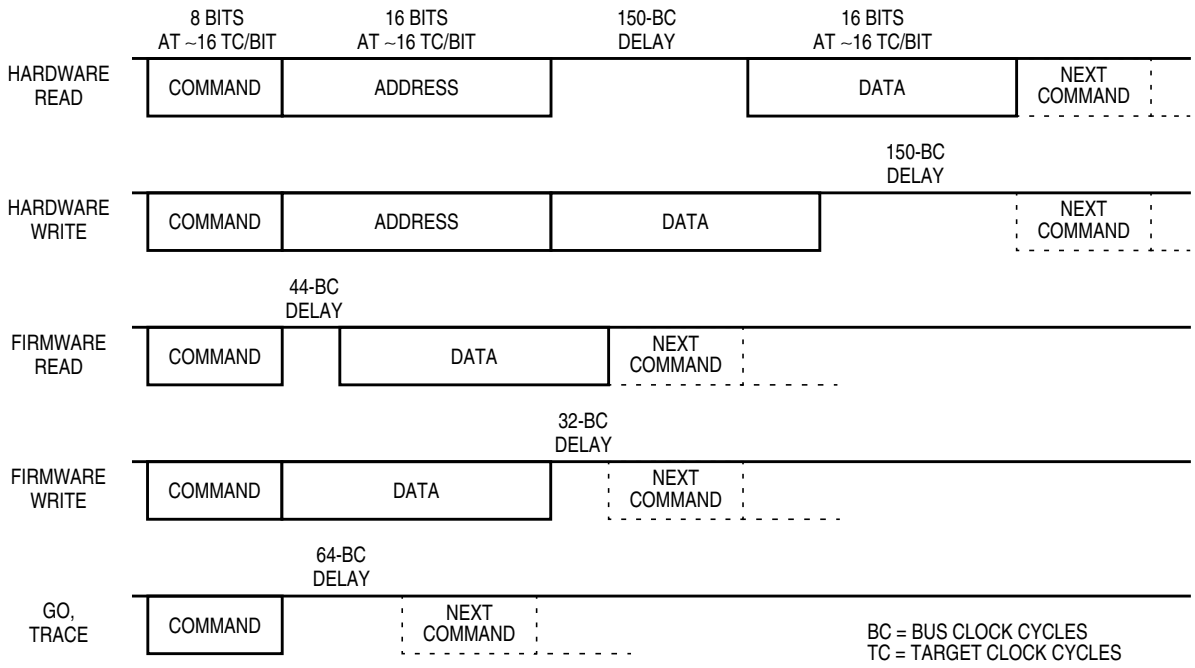


**Figure 6-6. BDM Command Structure**

## 6.4.6 BDM Serial Interface

The BDM communicates with external devices serially via the BKGD pin. During reset, this pin is a mode select input which selects between normal and special modes of operation. After reset, this pin becomes the dedicated serial interface pin for the BDM.

The BDM serial interface is timed using the clock selected by the CLKSW bit in the status register see Section 6.3.2.1, “BDM Status Register (BDMSTS).” This clock will be referred to as the target clock in the following explanation.

The BDM serial interface uses a clocking scheme in which the external host generates a falling edge on the BKGD pin to indicate the start of each bit time. This falling edge is sent for every bit whether data is transmitted or received. Data is transferred most significant bit (MSB) first at 16 target clock cycles per bit. The interface times out if 512 clock cycles occur between falling edges from the host.

The BKGD pin is a pseudo open-drain pin and has an weak on-chip active pull-up that is enabled at all times. It is assumed that there is an external pull-up and that drivers connected to BKGD do not typically drive the high level. Because R-C rise time could be unacceptably long, the target system and host provide brief driven-high (speedup) pulses to drive BKGD to a logic 1. The source of this speedup pulse is the host for transmit cases and the target for receive cases.

The timing for host-to-target is shown in Figure 6-7 and that of target-to-host in Figure 6-8 and Figure 6-9. All four cases begin when the host drives the BKGD pin low to generate a falling edge. Because the host and target are operating from separate clocks, it can take the target system up to one full clock cycle to recognize this edge. The target measures delays from this perceived start of the bit time while the host measures delays from the point it actually drove BKGD low to start the bit up to one target clock cycle

earlier. Synchronization between the host and target is established in this manner at the start of every bit time.

Figure 6-7 shows an external host transmitting a logic 1 and transmitting a logic 0 to the BKGD pin of a target system. The host is asynchronous to the target, so there is up to a one clock-cycle delay from the host-generated falling edge to where the target recognizes this edge as the beginning of the bit time. Ten target clock cycles later, the target senses the bit level on the BKGD pin. Internal glitch detect logic requires the pin be driven high no later that eight target clock cycles after the falling edge for a logic 1 transmission.

Because the host drives the high speedup pulses in these two cases, the rising edges look like digitally driven signals.

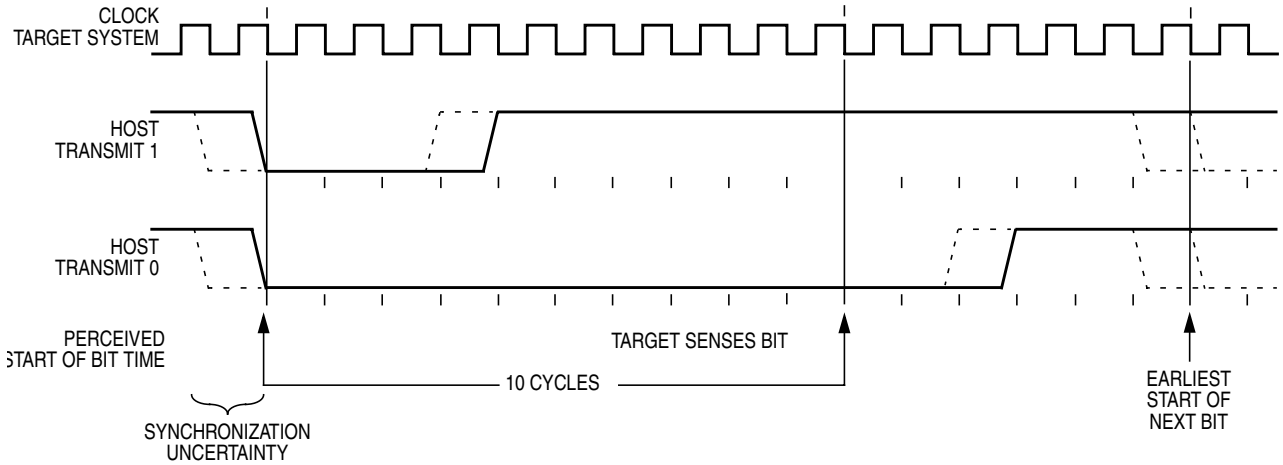


**Figure 6-7. BDM Host-to-Target Serial Bit Timing**

The receive cases are more complicated. Figure 6-8 shows the host receiving a logic 1 from the target system. Because the host is asynchronous to the target, there is up to one clock-cycle delay from the host-generated falling edge on BKGD to the perceived start of the bit time in the target. The host holds the BKGD pin low long enough for the target to recognize it (at least two target clock cycles). The host must release the low drive before the target drives a brief high speedup pulse seven target clock cycles after the perceived start of the bit time. The host should sample the bit level about 10 target clock cycles after it started the bit time.

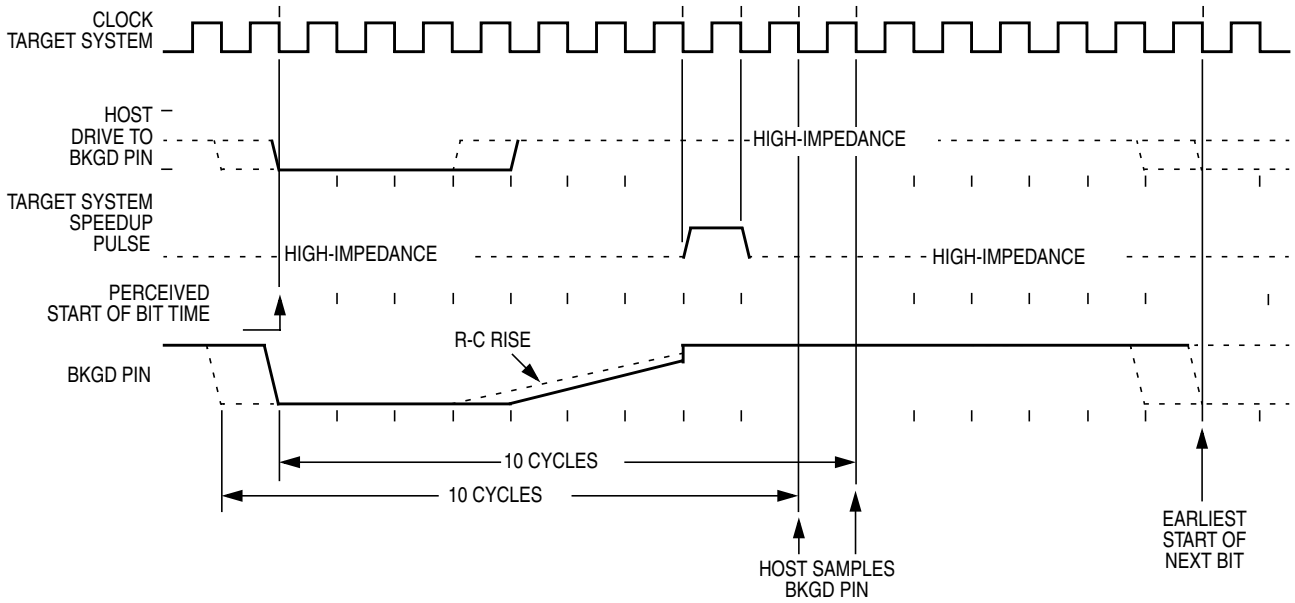


**Figure 6-8. BDM Target-to-Host Serial Bit Timing (Logic 1)**

Figure 6-9 shows the host receiving a logic 0 from the target. Because the host is asynchronous to the target, there is up to a one clock-cycle delay from the host-generated falling edge on BKGD to the start of the bit time as perceived by the target. The host initiates the bit time but the target finishes it. Because the target wants the host to receive a logic 0, it drives the BKGD pin low for 13 target clock cycles then briefly drives it high to speed up the rising edge. The host samples the bit level about 10 target clock cycles after starting the bit time.

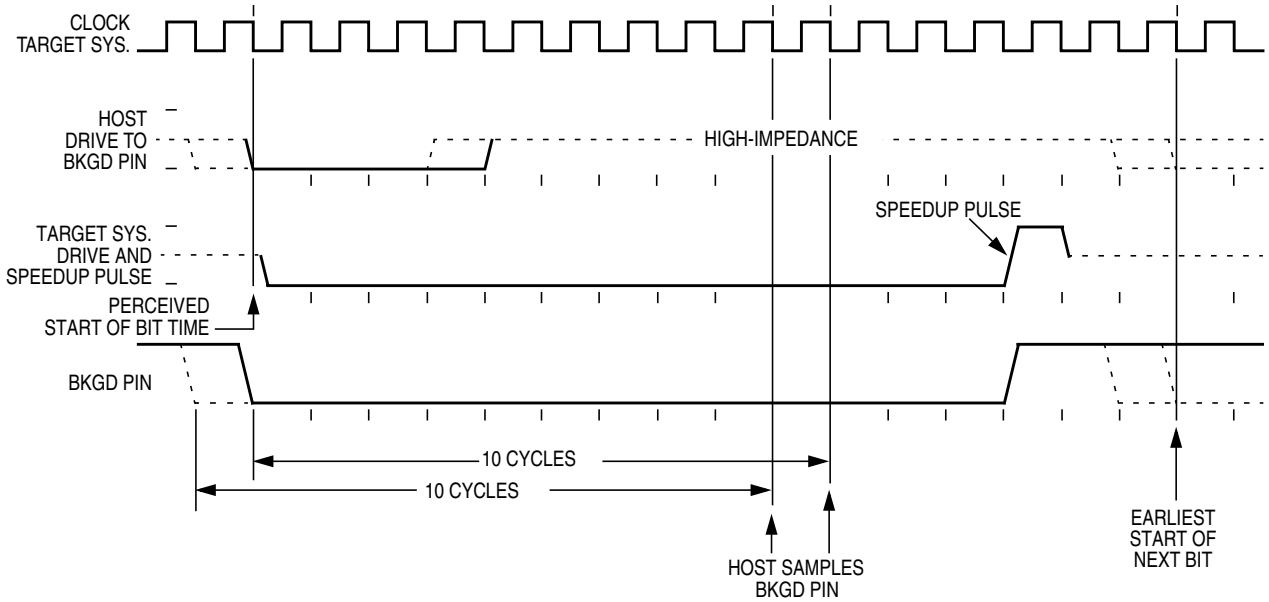


**Figure 6-9. BDM Target-to-Host Serial Bit Timing (Logic 0)**

### 6.4.7 Serial Interface Hardware Handshake Protocol

BDM commands that require CPU execution are ultimately treated at the MCU bus rate. Because the BDM clock source can be asynchronously related to the bus frequency, when CLKSW = 0, it is very helpful to provide a handshake protocol in which the host could determine when an issued command is executed by the CPU. The alternative is to always wait the amount of time equal to the appropriate number of cycles at the slowest possible rate the clock could be running. This sub-section will describe the hardware handshake protocol.

The hardware handshake protocol signals to the host controller when an issued command was successfully executed by the target. This protocol is implemented by a 16 serial clock cycle low pulse followed by a brief speedup pulse in the BKGD pin. This pulse is generated by the target MCU when a command, issued by the host, has been successfully executed (see Figure 6-10). This pulse is referred to as the ACK pulse. After the ACK pulse has finished: the host can start the bit retrieval if the last issued command was a read command, or start a new command if the last command was a write command or a control command (BACKGROUND, GO, GO_UNTIL, or TRACE1). The ACK pulse is not issued earlier than 32 serial clock cycles after the BDM command was issued. The end of the BDM command is assumed to be the 16th tick of the last bit. This minimum delay assures enough time for the host to perceive the ACK pulse. Note also that, there is no upper limit for the delay between the command and the related ACK pulse, because the command execution depends upon the CPU bus frequency, which in some cases could be very slow compared to the serial communication rate. This protocol allows a great flexibility for the POD designers, because it does not rely on any accurate time measurement or short response time to any event in the serial communication.

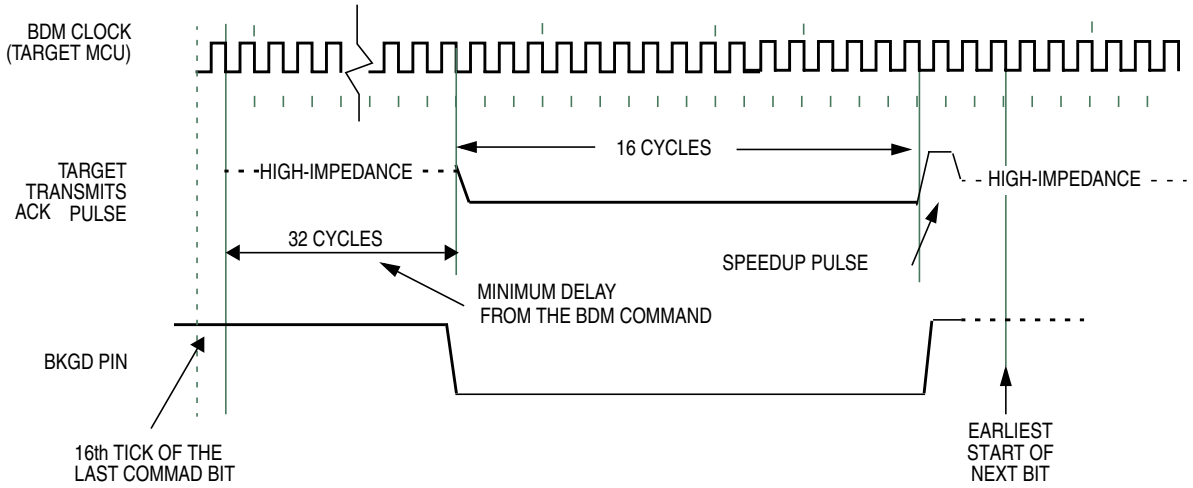


**Figure 6-10. Target Acknowledge Pulse (ACK)**

**NOTE**

If the ACK pulse was issued by the target, the host assumes the previous command was executed. If the CPU enters WAIT or STOP prior to executing a hardware command, the ACK pulse will not be issued meaning that the BDM command was not executed. After entering wait or stop mode, the BDM command is no longer pending.

Figure 6-11 shows the ACK handshake protocol in a command level timing diagram. The READ_BYTE instruction is used as an example. First, the 8-bit instruction opcode is sent by the host, followed by the address of the memory location to be read. The target BDM decodes the instruction. A bus cycle is grabbed (free or stolen) by the BDM and it executes the READ_BYTE operation. Having retrieved the data, the BDM issues an ACK pulse to the host controller, indicating that the addressed byte is ready to be retrieved. After detecting the ACK pulse, the host initiates the byte retrieval process. Note that data is sent in the form of a word and the host needs to determine which is the appropriate byte based on whether the address was odd or even.

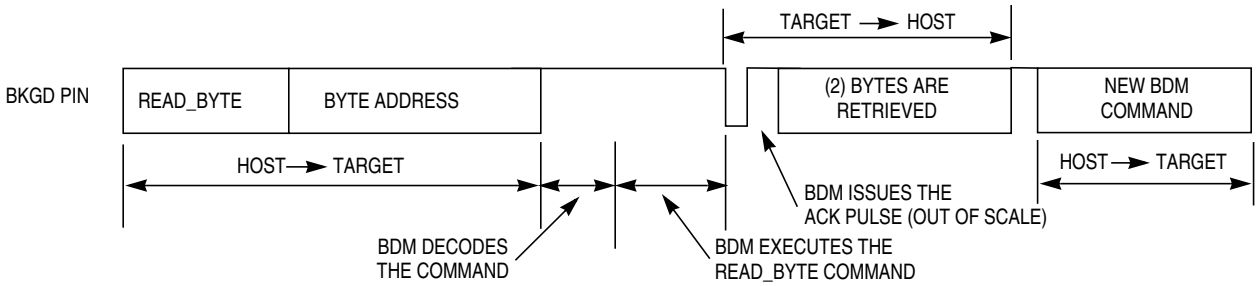


**Figure 6-11. Handshake Protocol at Command Level**

Differently from the normal bit transfer (where the host initiates the transmission), the serial interface ACK handshake pulse is initiated by the target MCU by issuing a falling edge in the BKGD pin. The hardware handshake protocol in Figure 6-10 specifies the timing when the BKGD pin is being driven, so the host should follow this timing constraint in order to avoid the risk of an electrical conflict in the BKGD pin.

**NOTE**

The only place the BKGD pin can have an electrical conflict is when one side is driving low and the other side is issuing a speedup pulse (high). Other "highs" are pulled rather than driven. However, at low rates the time of the speedup pulse can become lengthy and so the potential conflict time becomes longer as well.

The ACK handshake protocol does not support nested ACK pulses. If a BDM command is not acknowledge by an ACK pulse, the host needs to abort the pending command first in order to be able to issue a new BDM command. When the CPU enters WAIT or STOP while the host issues a command that requires CPU execution (e.g., WRITE_BYTE), the target discards the incoming command due to the WAIT or STOP being detected. Therefore, the command is not acknowledged by the target, which means that the ACK pulse will not be issued in this case. After a certain time the host should decide to abort the ACK sequence in order to be free to issue a new command. Therefore, the protocol should provide a mechanism in which a command, and therefore a pending ACK, could be aborted.

**NOTE**

Differently from a regular BDM command, the ACK pulse does not provide a time out. This means that in the case of a WAIT or STOP instruction being executed, the ACK would be prevented from being issued. If not aborted, the ACK would remain pending indefinitely. See the handshake abort procedure described in Section 6.4.8, "Hardware Handshake Abort Procedure."

### 6.4.8 Hardware Handshake Abort Procedure

The abort procedure is based on the SYNC command. In order to abort a command, which had not issued the corresponding ACK pulse, the host controller should generate a low pulse in the BKGD pin by driving it low for at least 128 serial clock cycles and then driving it high for one serial clock cycle, providing a speedup pulse. By detecting this long low pulse in the BKGD pin, the target executes the SYNC protocol, see Section 6.4.9, "SYNC — Request Timed Reference Pulse," and assumes that the pending command and therefore the related ACK pulse, are being aborted. Therefore, after the SYNC protocol has been completed the host is free to issue new BDM commands.

Although it is not recommended, the host could abort a pending BDM command by issuing a low pulse in the BKGD pin shorter than 128 serial clock cycles, which will not be interpreted as the SYNC command. The ACK is actually aborted when a falling edge is perceived by the target in the BKGD pin. The short abort pulse should have at least 4 clock cycles keeping the BKGD pin low, in order to allow the falling edge to be detected by the target. In this case, the target will not execute the SYNC protocol but the pending command will be aborted along with the ACK pulse. The potential problem with this abort procedure is when there is a conflict between the ACK pulse and the short abort pulse. In this case, the target may not perceive the abort pulse. The worst case is when the pending command is a read command (i.e., READ_BYTE). If the abort pulse is not perceived by the target the host will attempt to send a new command after the abort pulse was issued, while the target expects the host to retrieve the accessed memory byte. In this case, host and target will run out of synchronism. However, if the command to be aborted is not a read command the short abort pulse could be used. After a command is aborted the target assumes the next falling edge, after the abort pulse, is the first bit of a new BDM command.

**NOTE**

The details about the short abort pulse are being provided only as a reference for the reader to better understand the BDM internal behavior. It is not recommended that this procedure be used in a real application.

Because the host knows the target serial clock frequency, the SYNC command (used to abort a command) does not need to consider the lower possible target frequency. In this case, the host could issue a SYNC very close to the 128 serial clock cycles length. Providing a small overhead on the pulse length in order to assure the SYNC pulse will not be misinterpreted by the target. See Section 6.4.9, "SYNC — Request Timed Reference Pulse."

Figure 6-12 shows a SYNC command being issued after a READ_BYTE, which aborts the READ_BYTE command. Note that, after the command is aborted a new command could be issued by the host computer.

**NOTE**

Figure 6-12 does not represent the signals in a true timing scale

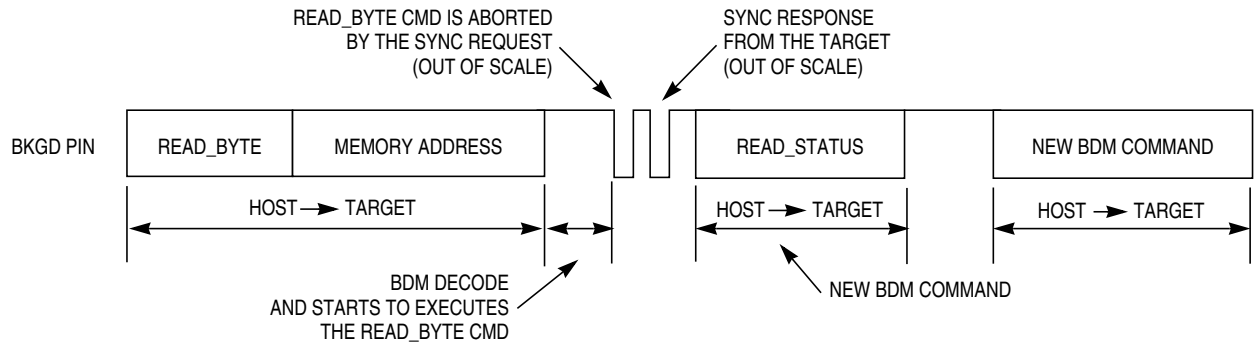


**Figure 6-12. ACK Abort Procedure at the Command Level**

Figure 6-13 shows a conflict between the ACK pulse and the SYNC request pulse. This conflict could occur if a POD device is connected to the target BKGD pin and the target is already in debug active mode. Consider that the target CPU is executing a pending BDM command at the exact moment the POD is being connected to the BKGD pin. In this case, an ACK pulse is issued along with the SYNC command. In this case, there is an electrical conflict between the ACK speedup pulse and the SYNC pulse. Because this is not a probable situation, the protocol does not prevent this conflict from happening.

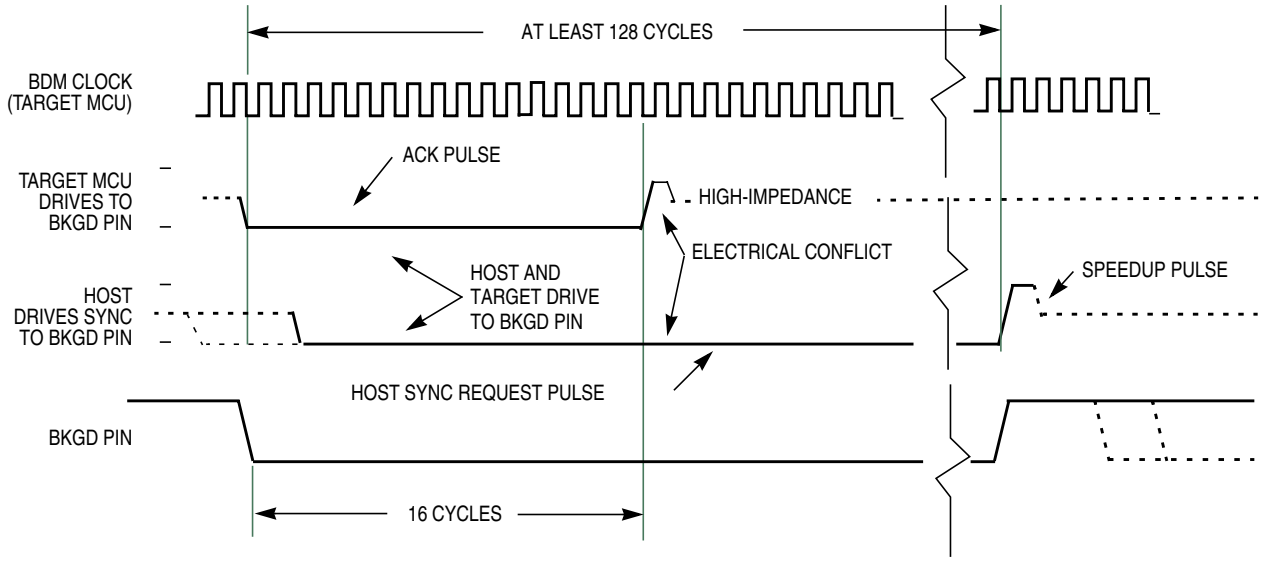


**Figure 6-13. ACK Pulse and SYNC Request Conflict**

**NOTE**

This information is being provided so that the MCU integrator will be aware that such a conflict could eventually occur.

The hardware handshake protocol is enabled by the ACK_ENABLE and disabled by the ACK_DISABLE BDM commands. This provides backwards compatibility with the existing POD devices which are not able to execute the hardware handshake protocol. It also allows for new POD devices, that support the hardware handshake protocol, to freely communicate with the target device. If desired, without the need for waiting for the ACK pulse.

The commands are described as follows:

- ACK_ENABLE — enables the hardware handshake protocol. The target will issue the ACK pulse when a CPU command is executed by the CPU. The ACK_ENABLE command itself also has the ACK pulse as a response.
- ACK_DISABLE — disables the ACK pulse protocol. In this case, the host needs to use the worst case delay time at the appropriate places in the protocol.

The default state of the BDM after reset is hardware handshake protocol disabled.

All the read commands will ACK (if enabled) when the data bus cycle has completed and the data is then ready for reading out by the BKGD serial pin. All the write commands will ACK (if enabled) after the data has been received by the BDM through the BKGD serial pin and when the data bus cycle is complete. See Section 6.4.3, “BDM Hardware Commands,” and Section 6.4.4, “Standard BDM Firmware Commands,” for more information on the BDM commands.

The ACK_ENABLE sends an ACK pulse when the command has been completed. This feature could be used by the host to evaluate if the target supports the hardware handshake protocol. If an ACK pulse is issued in response to this command, the host knows that the target supports the hardware handshake protocol. If the target does not support the hardware handshake protocol the ACK pulse is not issued. In this case, the ACK_ENABLE command is ignored by the target because it is not recognized as a valid command.

The BACKGROUND command will issue an ACK pulse when the CPU changes from normal to background mode. The ACK pulse related to this command could be aborted using the SYNC command.

The GO command will issue an ACK pulse when the CPU exits from background mode. The ACK pulse related to this command could be aborted using the SYNC command.

The GO_UNTIL command is equivalent to a GO command with exception that the ACK pulse, in this case, is issued when the CPU enters into background mode. This command is an alternative to the GO command and should be used when the host wants to trace if a breakpoint match occurs and causes the CPU to enter active background mode. Note that the ACK is issued whenever the CPU enters BDM, which could be caused by a breakpoint match or by a BGND instruction being executed. The ACK pulse related to this command could be aborted using the SYNC command.

The TRACE1 command has the related ACK pulse issued when the CPU enters background active mode after one instruction of the application program is executed. The ACK pulse related to this command could be aborted using the SYNC command.

The TAGGO command will not issue an ACK pulse because this would interfere with the tagging function shared on the same pin.

### 6.4.9 SYNC — Request Timed Reference Pulse

The SYNC command is unlike other BDM commands because the host does not necessarily know the correct communication speed to use for BDM communications until after it has analyzed the response to the SYNC command. To issue a SYNC command, the host should perform the following steps:

1. Drive the BKGD pin low for at least 128 cycles at the lowest possible BDM serial communication frequency (the lowest serial communication frequency is determined by the crystal oscillator or the clock chosen by CLKSW.)
2. Drive BKGD high for a brief speedup pulse to get a fast rise time (this speedup pulse is typically one cycle of the host clock.)
3. Remove all drive to the BKGD pin so it reverts to high impedance.
4. Listen to the BKGD pin for the sync response pulse.

Upon detecting the SYNC request from the host, the target performs the following steps:

1. Discards any incomplete command received or bit retrieved.
2. Waits for BKGD to return to a logic 1.
3. Delays 16 cycles to allow the host to stop driving the high speedup pulse.
4. Drives BKGD low for 128 cycles at the current BDM serial communication frequency.
5. Drives a one-cycle high speedup pulse to force a fast rise time on BKGD.
6. Removes all drive to the BKGD pin so it reverts to high impedance.

The host measures the low time of this 128 cycle SYNC response pulse and determines the correct speed for subsequent BDM communications. Typically, the host can determine the correct communication speed within a few percent of the actual target speed and the communication protocol can easily tolerate speed errors of several percent.

As soon as the SYNC request is detected by the target, any partially received command or bit retrieved is discarded. This is referred to as a soft-reset, equivalent to a time-out in the serial communication. After the SYNC response, the target will consider the next falling edge (issued by the host) as the start of a new BDM command or the start of new SYNC request.

Another use of the SYNC command pulse is to abort a pending ACK pulse. The behavior is exactly the same as in a regular SYNC command. Note that one of the possible causes for a command to not be acknowledged by the target is a host-target synchronization problem. In this case, the command may not have been understood by the target and so an ACK response pulse will not be issued.

### 6.4.10 Instruction Tracing

When a TRACE1 command is issued to the BDM in active BDM, the CPU exits the standard BDM firmware and executes a single instruction in the user code. As soon as this has occurred, the CPU is forced to return to the standard BDM firmware and the BDM is active and ready to receive a new command. If the TRACE1 command is issued again, the next user instruction will be executed. This facilitates stepping or tracing through the user code one instruction at a time.

If an interrupt is pending when a TRACE1 command is issued, the interrupt stacking operation occurs but no user instruction is executed. Upon return to standard BDM firmware execution, the program counter points to the first instruction in the interrupt service routine.

### 6.4.11 Instruction Tagging

The instruction queue and cycle-by-cycle CPU activity are reconstructible in real time or from trace history that is captured by a logic analyzer. However, the reconstructed queue cannot be used to stop the CPU at a specific instruction. This is because execution already has begun by the time an operation is visible outside the system. A separate instruction tagging mechanism is provided for this purpose.

The tag follows program information as it advances through the instruction queue. When a tagged instruction reaches the head of the queue, the CPU enters active BDM rather than executing the instruction.

**NOTE**

Tagging is disabled when BDM becomes active and BDM serial commands are not processed while tagging is active.

Executing the BDM TAGGO command configures two system pins for tagging. The $\overline{\text{TAGLO}}$ signal shares a pin with the $\overline{\text{LSTRB}}$ signal, and the $\overline{\text{TAGHI}}$ signal shares a pin with the BKGD signal.

Table 6-7 shows the functions of the two tagging pins. The pins operate independently, that is the state of one pin does not affect the function of the other. The presence of logic level 0 on either pin at the fall of the external clock (ECLK) performs the indicated function. High tagging is allowed in all modes. Low tagging is allowed only when low strobe is enabled (LSTRB is allowed only in wide expanded modes and emulation expanded narrow mode).

**Table 6-7. Tag Pin Function**

| $\overline{\text{TAGHI}}$ | $\overline{\text{TAGLO}}$ | Tag |
|---|---|---|
| 1 | 1 | No tag |
| 1 | 0 | Low byte |
| 0 | 1 | High byte |
| 0 | 0 | Both bytes |

### 6.4.12 Serial Communication Time-Out

The host initiates a host-to-target serial transmission by generating a falling edge on the BKGD pin. If BKGD is kept low for more than 128 target clock cycles, the target understands that a SYNC command was issued. In this case, the target will keep waiting for a rising edge on BKGD in order to answer the SYNC request pulse. If the rising edge is not detected, the target will keep waiting forever without any time-out limit.

Consider now the case where the host returns BKGD to logic one before 128 cycles. This is interpreted as a valid bit transmission, and not as a SYNC request. The target will keep waiting for another falling edge marking the start of a new bit. If, however, a new falling edge is not detected by the target within 512 clock cycles since the last falling edge, a time-out occurs and the current command is discarded without affecting memory or the operating mode of the MCU. This is referred to as a soft-reset.

If a read command is issued but the data is not retrieved within 512 serial clock cycles, a soft-reset will occur causing the command to be disregarded. The data is not available for retrieval after the time-out has occurred. This is the expected behavior if the handshake protocol is not enabled. However, consider the behavior where the BDC is running in a frequency much greater than the CPU frequency. In this case, the command could time out before the data is ready to be retrieved. In order to allow the data to be retrieved even with a large clock frequency mismatch (between BDC and CPU) when the hardware handshake protocol is enabled, the time out between a read command and the data retrieval is disabled. Therefore, the host could wait for more then 512 serial clock cycles and continue to be able to retrieve the data from an issued read command. However, as soon as the handshake pulse (ACK pulse) is issued, the time-out feature is re-activated, meaning that the target will time out after 512 clock cycles. Therefore, the host needs to retrieve the data within a 512 serial clock cycles time frame after the ACK pulse had been issued. After that period, the read command is discarded and the data is no longer available for retrieval. Any falling edge of the BKGD pin after the time-out period is considered to be a new command or a SYNC request.

Note that whenever a partially issued command, or partially retrieved data, has occurred the time out in the serial communication is active. This means that if a time frame higher than 512 serial clock cycles is observed between two consecutive negative edges and the command being issued or data being retrieved is not complete, a soft-reset will occur causing the partially received command or data retrieved to be disregarded. The next falling edge of the BKGD pin, after a soft-reset has occurred, is considered by the target as the start of a new BDM command, or the start of a SYNC request pulse.

### 6.4.13 Operation in Wait Mode

The BDM cannot be used in wait mode if the system disables the clocks to the BDM.

There is a clearing mechanism associated with the WAIT instruction when the clocks to the BDM (CPU core platform) are disabled. As the clocks restart from wait mode, the BDM receives a soft reset (clearing any command in progress) and the ACK function will be disabled. This is a change from previous BDM modules.

### 6.4.14 Operation in Stop Mode

The BDM is completely shutdown in stop mode.

There is a clearing mechanism associated with the STOP instruction. STOP must be enabled and the part must go into stop mode for this to occur. As the clocks restart from stop mode, the BDM receives a soft reset (clearing any command in progress) and the ACK function will be disabled. This is a change from previous BDM modules.

# Chapter 7
# Debug Module (DBGV1) Block Description

## 7.1 Introduction

This section describes the functionality of the debug (DBG) sub-block of the HCS12 core platform.

The DBG module is designed to be fully compatible with the existing BKP_HCS12_A module (BKP mode) and furthermore provides an on-chip trace buffer with flexible triggering capability (DBG mode). The DBG module provides for non-intrusive debug of application software. The DBG module is optimized for the HCS12 16-bit architecture.

### 7.1.1 Features

The DBG module in BKP mode includes these distinctive features:

- Full or dual breakpoint mode
  - Compare on address and data (full)
  - Compare on either of two addresses (dual)
- BDM or SWI breakpoint
  - Enter BDM on breakpoint (BDM)
  - Execute SWI on breakpoint (SWI)
- Tagged or forced breakpoint
  - Break just before a specific instruction will begin execution (TAG)
  - Break on the first instruction boundary after a match occurs (Force)
- Single, range, or page address compares
  - Compare on address (single)
  - Compare on address 256 byte (range)
  - Compare on any 16K page (page)
- At forced breakpoints compare address on read or write
- High and/or low byte data compares
- Comparator C can provide an additional tag or force breakpoint (enhancement for BKP mode)

The DBG in DBG mode includes these distinctive features:

- Three comparators (A, B, and C)
  - Dual mode, comparators A and B used to compare addresses
  - Full mode, comparator A compares address and comparator B compares data
  - Can be used as trigger and/or breakpoint
  - Comparator C used in LOOP1 capture mode or as additional breakpoint
- Four capture modes
  - Normal mode, change-of-flow information is captured based on trigger specification
  - Loop1 mode, comparator C is dynamically updated to prevent redundant change-of-flow storage.
  - Detail mode, address and data for all cycles except program fetch (P) and free (f) cycles are stored in trace buffer
  - Profile mode, last instruction address executed by CPU is returned when trace buffer address is read
- Two types of breakpoint or debug triggers
  - Break just before a specific instruction will begin execution (tag)
  - Break on the first instruction boundary after a match occurs (force)
- BDM or SWI breakpoint
  - Enter BDM on breakpoint (BDM)
  - Execute SWI on breakpoint (SWI)
- Nine trigger modes for comparators A and B
  - A
  - A or B
  - A then B
  - A and B, where B is data (full mode)
  - A and not B, where B is data (full mode)
  - Event only B, store data
  - A then event only B, store data
  - Inside range, $A \leq$ address $\leq B$
  - Outside range, address $< A$ or address $> B$
- Comparator C provides an additional tag or force breakpoint when capture mode is not configured in LOOP1 mode.
- Sixty-four word (16 bits wide) trace buffer for storing change-of-flow information, event only data and other bus information.
  - Source address of taken conditional branches (long, short, bit-conditional, and loop constructs)
  - Destination address of indexed JMP, JSR, and CALL instruction.
  - Destination address of RTI, RTS, and RTC instructions
  - Vector address of interrupts, except for SWI and BDM vectors

— Data associated with event B trigger modes
— Detail report mode stores address and data for all cycles except program (P) and free (f) cycles
— Current instruction address when in profiling mode
— BGND is not considered a change-of-flow (cof) by the debugger

### 7.1.2 Modes of Operation

There are two main modes of operation: breakpoint mode and debug mode. Each one is mutually exclusive of the other and selected via a software programmable control bit.

In the breakpoint mode there are two sub-modes of operation:

- Dual address mode, where a match on either of two addresses will cause the system to enter background debug mode (BDM) or initiate a software interrupt (SWI).
- Full breakpoint mode, where a match on address and data will cause the system to enter background debug mode (BDM) or initiate a software interrupt (SWI).

In debug mode, there are several sub-modes of operation.

- Trigger modes

  There are many ways to create a logical trigger. The trigger can be used to capture bus information either starting from the trigger or ending at the trigger. Types of triggers (A and B are registers):

  — A only
  — A or B
  — A then B
  — Event only B (data capture)
  — A then event only B (data capture)
  — A and B, full mode
  — A and not B, full mode
  — Inside range
  — Outside range
- Capture modes

  There are several capture modes. These determine which bus information is saved and which is ignored.

  — Normal: save change-of-flow program fetches
  — Loop1: save change-of-flow program fetches, ignoring duplicates
  — Detail: save all bus operations except program and free cycles
  — Profile: poll target from external device

### 7.1.3 Block Diagram

Figure 7-1 is a block diagram of this module in breakpoint mode. Figure 7-2 is a block diagram of this module in debug mode.

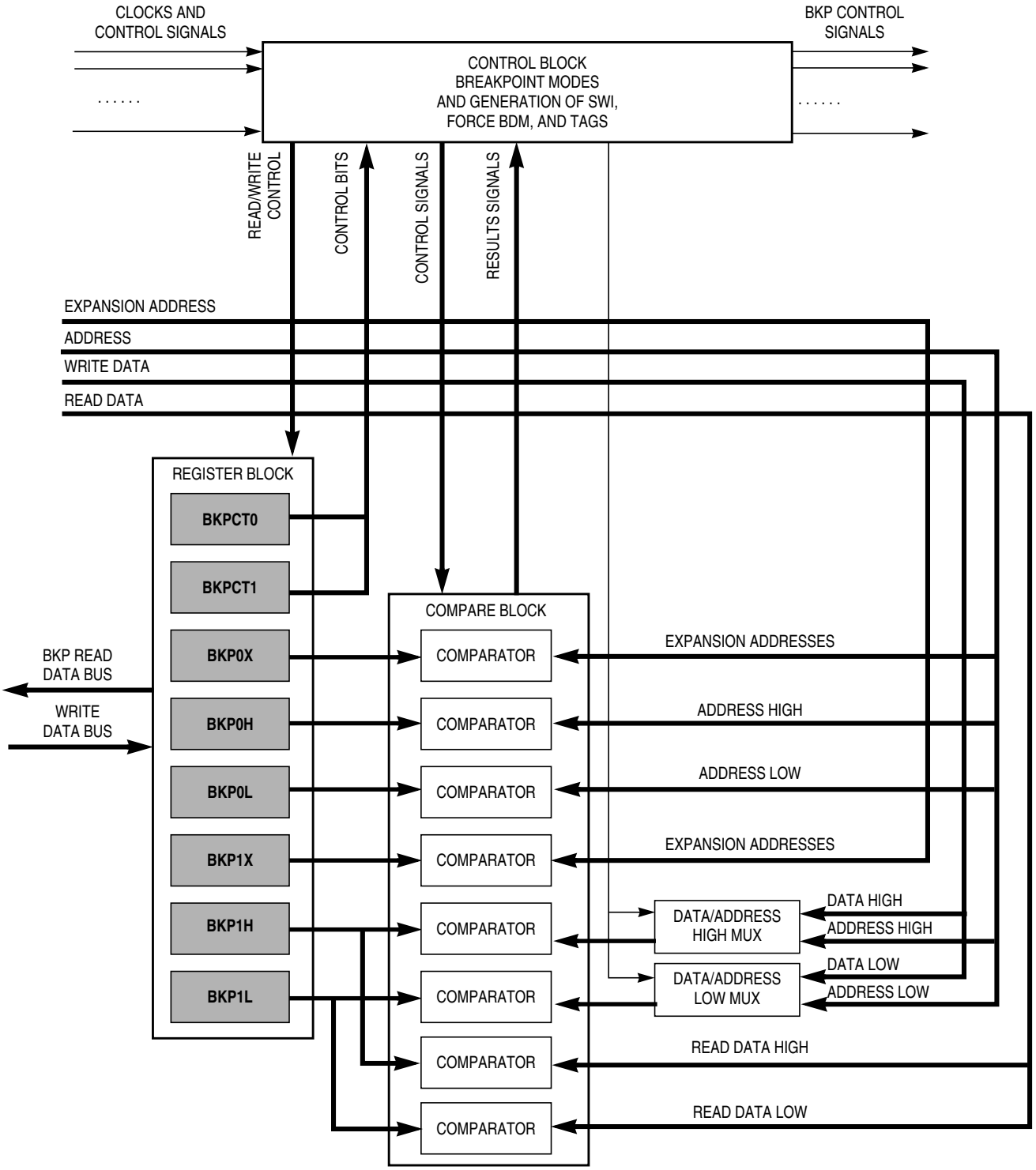


**Figure 7-1. DBG Block Diagram in BKP Mode**

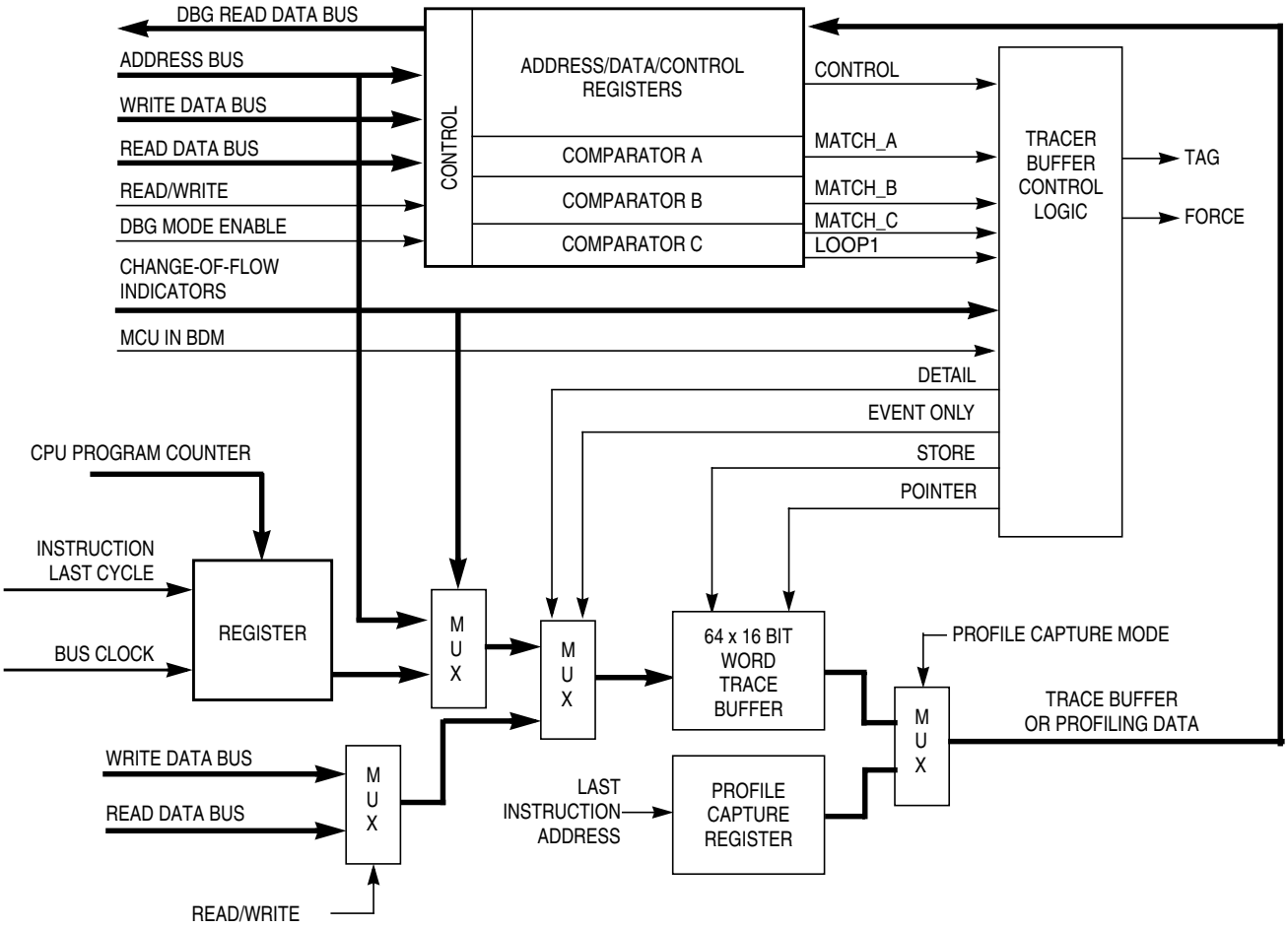


**Figure 7-2. DBG Block Diagram in DBG Mode**

## 7.2 External Signal Description

The DBG sub-module relies on the external bus interface (generally the MEBI) when the DBG is matching on the external bus.

The tag pins in Table 7-1 (part of the MEBI) may also be a part of the breakpoint operation.

**Table 7-1. External System Pins Associated with DBG and MEBI**

| Pin Name | Pin Functions | Description |
|---|---|---|
| BKGD/MODC/ $\overline{\text{TAGHI}}$ | $\overline{\text{TAGHI}}$ | When instruction tagging is on, a 0 at the falling edge of E tags the high half of the instruction word being read into the instruction queue. |
| PE3/$\overline{\text{LSTRB}}$/ $\overline{\text{TAGLO}}$ | $\overline{\text{TAGLO}}$ | In expanded wide mode or emulation narrow modes, when instruction tagging is on and low strobe is enabled, a 0 at the falling edge of E tags the low half of the instruction word being read into the instruction queue. |

## 7.3 Memory Map and Register Definition

A summary of the registers associated with the DBG sub-block is shown in Figure 7-3. Detailed descriptions of the registers and bits are given in the subsections that follow.

### 7.3.1 Module Memory Map

**Table 7-2. DBGV1 Memory Map**

| Address Offset | Use | Access |
|---|---|---|
| 0x0020 | Debug Control Register (DBGC1) | R/W |
| 0x0021 | Debug Status and Control Register (DBGSC) | R/W |
| 0x0022 | Debug Trace Buffer Register High (DBGTBH) | R |
| 0x0023 | Debug Trace Buffer Register Low (DBGTBL) | R |
| 0x0024 | Debug Count Register (DBGCNT) | R |
| 0x0025 | Debug Comparator C Extended Register (DBGCCX) | R/W |
| 0x0026 | Debug Comparator C Register High (DBGCCH) | R/W |
| 0x0027 | Debug Comparator C Register Low (DBGCCL) | R/W |
| 0x0028 | Debug Control Register 2 (DBGC2) / (BKPCT0) | R/W |
| 0x0029 | Debug Control Register 3 (DBGC3) / (BKPCT1) | R/W |
| 0x002A | Debug Comparator A Extended Register (DBGCAX) / (/BKP0X) | R/W |
| 0x002B | Debug Comparator A Register High (DBGCAH) / (BKP0H) | R/W |
| 0x002C | Debug Comparator A Register Low (DBGCAL) / (BKP0L) | R/W |
| 0x002D | Debug Comparator B Extended Register (DBGCBX) / (BKP1X) | R/W |
| 0x002E | Debug Comparator B Register High (DBGCBH) / (BKP1H) | R/W |
| 0x002F | Debug Comparator B Register Low (DBGCBL) / (BKP1L) | R/W |

### 7.3.2 Register Descriptions

This section consists of the DBG register descriptions in address order. Most of the register bits can be written to in either BKP or DBG mode, although they may not have any effect in one of the modes. However, the only bits in the DBG module that can be written while the debugger is armed (ARM = 1) are DBGEN and ARM

| Name[1] | | Bit 7 | 6 | 5 | 4 | 3 | 2 | 1 | Bit 0 |
|---|---|---|---|---|---|---|---|---|---|
| 0x0020 DBGC1 | R | DBGEN | ARM | TRGSEL | BEGIN | DBGBRK | 0 | CAPMOD | |
| | W | | | | | | | | |
| 0x0021 DBGSC | R | AF | BF | CF | 0 | TRG | | | |
| | W | | | | | | | | |

= Unimplemented or Reserved

**Figure 7-3. DBG Register Summary**

| Name[1] | | Bit 7 | 6 | 5 | 4 | 3 | 2 | 1 | Bit 0 |
|---|---|---|---|---|---|---|---|---|---|
| 0x0022 DBGTBH | R | Bit 15 | Bit 14 | Bit 13 | Bit 12 | Bit 11 | Bit 10 | Bit 9 | Bit 8 |
| | W | | | | | | | | |
| 0x0023 DBGTBL | R | Bit 7 | Bit 6 | Bit 5 | Bit 4 | Bit 3 | Bit 2 | Bit 1 | Bit 0 |
| | W | | | | | | | | |
| 0x0024 DBGCNT | R | TBF | 0 | CNT | | | | | |
| | W | | | | | | | | |
| 0x0025 DBGCCX[(2)] | R | PAGSEL | | EXTCMP | | | | | |
| | W | | | | | | | | |
| 0x0026 DBGCCH[2] | R | Bit 15 | 14 | 13 | 12 | 11 | 10 | 9 | Bit 8 |
| | W | | | | | | | | |
| 0x0027 DBGCCL[2] | R | Bit 7 | 6 | 5 | 4 | 3 | 2 | 1 | Bit 0 |
| | W | | | | | | | | |
| 0x0028 DBGC2 BKPCT0 | R | BKABEN | FULL | BDM | TAGAB | BKCEN | TAGC | RWCEN | RWC |
| | W | | | | | | | | |
| 0x0029 DBGC3 BKPCT1 | R | BKAMBH | BKAMBL | BKBMBH | BKBMBL | RWAEN | RWA | RWBEN | RWB |
| | W | | | | | | | | |
| 0x002A DBGCAX BKP0X | R | PAGSEL | | EXTCMP | | | | | |
| | W | | | | | | | | |
| 0x002B DBGCAH BKP0H | R | Bit 15 | 14 | 13 | 12 | 11 | 10 | 9 | Bit 8 |
| | W | | | | | | | | |
| 0x002C DBGCAL BKP0L | R | Bit 7 | 6 | 5 | 4 | 3 | 2 | 1 | Bit 0 |
| | W | | | | | | | | |
| 0x002D DBGCBX BKP1X | R | PAGSEL | | EXTCMP | | | | | |
| | W | | | | | | | | |
| 0x002E DBGCBH BKP1H | R | Bit 15 | 14 | 13 | 12 | 11 | 10 | 9 | Bit 8 |
| | W | | | | | | | | |
| 0x002F DBGCBL BKP1L | R | Bit 7 | 6 | 5 | 4 | 3 | 2 | 1 | Bit 0 |
| | W | | | | | | | | |

= Unimplemented or Reserved

**Figure 7-3. DBG Register Summary (continued)**

1. The DBG module is designed for backwards compatibility to existing BKP modules. Register and bit names have changed from the BKP module. This column shows the DBG register name, as well as the BKP register name for reference.
2. Comparator C can be used to enhance the BKP mode by providing a third breakpoint.

### 7.3.2.1 Debug Control Register 1 (DBGC1)

**NOTE**

All bits are used in DBG mode only.

Module Base + 0x0020
Starting address location affected by INITRG register setting.

| | 7 | 6 | 5 | 4 | 3 | 2 | 1 | 0 |
|---|---|---|---|---|---|---|---|---|
| R<br>W | DBGEN | ARM | TRGSEL | BEGIN | DBGBRK | 0 | CAPMOD | |
| Reset | 0 | 0 | 0 | 0 | 0 | 0 | 0 | 0 |

= Unimplemented or Reserved

**Figure 7-4. Debug Control Register (DBGC1)**

**NOTE**

This register cannot be written if BKP mode is enabled (BKABEN in DBGC2 is set).

**Table 7-3. DBGC1 Field Descriptions**

| Field | Description |
|---|---|
| 7<br>DBGEN | **DBG Mode Enable Bit** — The DBGEN bit enables the DBG module for use in DBG mode. This bit cannot be set if the MCU is in secure mode.<br>0 DBG mode disabled<br>1 DBG mode enabled |
| 6<br>ARM | **Arm Bit** — The ARM bit controls whether the debugger is comparing and storing data in the trace buffer. See Section 7.4.2.4, “Arming the DBG Module,” for more information.<br>0 Debugger unarmed<br>1 Debugger armed<br>**Note:** This bit cannot be set if the DBGEN bit is not also being set at the same time. For example, a write of 01 to DBGEN[7:6] will be interpreted as a write of 00. |
| 5<br>TRGSEL | **Trigger Selection Bit** — The TRGSEL bit controls the triggering condition for comparators A and B in DBG mode. It serves essentially the same function as the TAGAB bit in the DBGC2 register does in BKP mode. See Section 7.4.2.1.2, “Trigger Selection,” for more information. TRGSEL may also determine the type of breakpoint based on comparator A and B if enabled in DBG mode (DBGBRK = 1). Please refer to Section 7.4.3.1, “Breakpoint Based on Comparator A and B.”<br>0 Trigger on any compare address match<br>1 Trigger before opcode at compare address gets executed (tagged-type) |
| 4<br>BEGIN | **Begin/End Trigger Bit** — The BEGIN bit controls whether the trigger begins or ends storing of data in the trace buffer. See Section 7.4.2.8.1, “Storing with Begin-Trigger,” and Section 7.4.2.8.2, “Storing with End-Trigger,” for more details.<br>0 Trigger at end of stored data<br>1 Trigger before storing data |

**Table 7-3. DBGC1 Field Descriptions (continued)**

| Field | Description |
|---|---|
| 3<br>DBGBRK | **DBG Breakpoint Enable Bit** — The DBGBRK bit controls whether the debugger will request a breakpoint based on comparator A and B to the CPU upon completion of a tracing session. Please refer to Section 7.4.3, "Breakpoints," for further details.<br>0 CPU break request not enabled<br>1 CPU break request enabled |
| 1:0<br>CAPMOD | **Capture Mode Field** — See Table 7-4 for capture mode field definitions. In LOOP1 mode, the debugger will automatically inhibit redundant entries into capture memory. In detail mode, the debugger is storing address and data for all cycles except program fetch (P) and free (f) cycles. In profile mode, the debugger is returning the address of the last instruction executed by the CPU on each access of trace buffer address. Refer to Section 7.4.2.6, "Capture Modes," for more information. |

**Table 7-4. CAPMOD Encoding**

| CAPMOD | Description |
|---|---|
| 00 | Normal |
| 01 | LOOP1 |
| 10 | DETAIL |
| 11 | PROFILE |

### 7.3.2.2 Debug Status and Control Register (DBGSC)

Module Base + 0x0021
Starting address location affected by INITRG register setting.

| | 7 | 6 | 5 | 4 | 3 | 2 | 1 | 0 |
|---|---|---|---|---|---|---|---|---|
| R | AF | BF | CF | 0 | TRG | | | |
| W | | | | | | | | |
| Reset | 0 | 0 | 0 | 0 | 0 | 0 | 0 | 0 |

= Unimplemented or Reserved

**Figure 7-5. Debug Status and Control Register (DBGSC)**

**Table 7-5. DBGSC Field Descriptions**

| Field | Description |
|---|---|
| 7<br>AF | **Trigger A Match Flag** — The AF bit indicates if trigger A match condition was met since arming. This bit is cleared when ARM in DBGC1 is written to a 1 or on any write to this register.<br>0 Trigger A did not match<br>1 Trigger A match |
| 6<br>BF | **Trigger B Match Flag** — The BF bit indicates if trigger B match condition was met since arming.This bit is cleared when ARM in DBGC1 is written to a 1 or on any write to this register.<br>0 Trigger B did not match<br>1 Trigger B match |
| 5<br>CF | **Comparator C Match Flag** — The CF bit indicates if comparator C match condition was met since arming.This bit is cleared when ARM in DBGC1 is written to a 1 or on any write to this register.<br>0 Comparator C did not match<br>1 Comparator C match |
| 3:0<br>TRG | **Trigger Mode Bits** — The TRG bits select the trigger mode of the DBG module as shown Table 7-6. See Section 7.4.2.5, “Trigger Modes,” for more detail. |

**Table 7-6. Trigger Mode Encoding**

| TRG Value | Meaning |
|---|---|
| 0000 | A only |
| 0001 | A or B |
| 0010 | A then B |
| 0011 | Event only B |
| 0100 | A then event only B |
| 0101 | A and B (full mode) |
| 0110 | A and Not B (full mode) |
| 0111 | Inside range |
| 1000 | Outside range |
| 1001<br>↓<br>1111 | Reserved<br>(Defaults to A only) |

### 7.3.2.3 Debug Trace Buffer Register (DBGTB)

Module Base + 0x0022
Starting address location affected by INITRG register setting.

| | 15 | 14 | 13 | 12 | 11 | 10 | 9 | 8 |
|---|---|---|---|---|---|---|---|---|
| R | Bit 15 | Bit 14 | Bit 13 | Bit 12 | Bit 11 | Bit 10 | Bit 9 | Bit 8 |
| W | | | | | | | | |
| Reset | u | u | u | u | u | u | u | u |

= Unimplemented or Reserved

**Figure 7-6. Debug Trace Buffer Register High (DBGTBH)**

Module Base + 0x0023
Starting address location affected by INITRG register setting.

| | 7 | 6 | 5 | 4 | 3 | 2 | 1 | 0 |
|---|---|---|---|---|---|---|---|---|
| R | Bit 7 | Bit 6 | Bit 5 | Bit 4 | Bit 3 | Bit 2 | Bit 1 | Bit 0 |
| W | | | | | | | | |
| Reset | u | u | u | u | u | u | u | u |

= Unimplemented or Reserved

**Figure 7-7. Debug Trace Buffer Register Low (DBGTBL)**

**Table 7-7. DBGTB Field Descriptions**

| Field | Description |
|---|---|
| 15:0 | **Trace Buffer Data Bits** — The trace buffer data bits contain the data of the trace buffer. This register can be read only as a word read. Any byte reads or misaligned access of these registers will return 0 and will not cause the trace buffer pointer to increment to the next trace buffer address. The same is true for word reads while the debugger is armed. In addition, this register may appear to contain incorrect data if it is not read with the same capture mode bit settings as when the trace buffer data was recorded (See Section 7.4.2.9, “Reading Data from Trace Buffer”). Because reads will reflect the contents of the trace buffer RAM, the reset state is undefined. |

### 7.3.2.4 Debug Count Register (DBGCNT)

Module Base + 0x0024
Starting address location affected by INITRG register setting.

| | 7 | 6 | 5 | 4 | 3 | 2 | 1 | 0 |
|---|---|---|---|---|---|---|---|---|
| R | TBF | 0 | CNT | | | | | |
| W | | | | | | | | |
| Reset | 0 | 0 | 0 | 0 | 0 | 0 | 0 | 0 |

= Unimplemented or Reserved

**Figure 7-8. Debug Count Register (DBGCNT)**

**Table 7-8. DBGCNT Field Descriptions**

| Field | Description |
|---|---|
| 7<br>TBF | **Trace Buffer Full** — The TBF bit indicates that the trace buffer has stored 64 or more words of data since it was last armed. If this bit is set, then all 64 words will be valid data, regardless of the value in CNT[5:0]. The TBF bit is cleared when ARM in DBGC1 is written to a 1. |
| 5:0<br>CNT | **Count Value** — The CNT bits indicate the number of valid data words stored in the trace buffer. Table 7-9 shows the correlation between the CNT bits and the number of valid data words in the trace buffer. When the CNT rolls over to 0, the TBF bit will be set and incrementing of CNT will continue if DBG is in end-trigger mode. The DBGCNT register is cleared when ARM in DBGC1 is written to a 1. |

**Table 7-9. CNT Decoding Table**

| TBF | CNT | Description |
|---|---|---|
| 0 | 000000 | No data valid |
| 0 | 000001 | 1 word valid |
| 0 | 000010<br>..<br>..<br>111110 | 2 words valid<br>..<br>..<br>62 words valid |
| 0 | 111111 | 63 words valid |
| 1 | 000000 | 64 words valid; if BEGIN = 1, the ARM bit will be cleared. A breakpoint will be generated if DBGBRK = 1 |
| 1 | 000001<br>..<br>..<br>111111 | 64 words valid,<br>oldest data has been overwritten by most recent data |

### 7.3.2.5 Debug Comparator C Extended Register (DBGCCX)

Module Base + 0x0025
Starting address location affected by INITRG register setting.

| | 7 | 6 | 5 | 4 | 3 | 2 | 1 | 0 |
|---|---|---|---|---|---|---|---|---|
| R<br>W | PAGSEL | | EXTCMP | | | | | |
| Reset | 0 | 0 | 0 | 0 | 0 | 0 | 0 | 0 |

**Figure 7-9. Debug Comparator C Extended Register (DBGCCX)**

**Table 7-10. DBGCCX Field Descriptions**

| Field | Description |
|---|---|
| 7:6<br>PAGSEL | **Page Selector Field** — In both BKP and DBG mode, PAGSEL selects the type of paging as shown in Table 7-11. DPAGE and EPAGE are not yet implemented so the value in bit 7 will be ignored (i.e., PAGSEL values of 10 and 11 will be interpreted as values of 00 and 01, respectively). |
| 5:0<br>EXTCMP | **Comparator C Extended Compare Bits** — The EXTCMP bits are used as comparison address bits as shown in Table 7-11 along with the appropriate PPAGE, DPAGE, or EPAGE signal from the core.<br>**Note:** Comparator C can be used when the DBG module is configured for BKP mode. Extended addressing comparisons for comparator C use PAGSEL and will operate differently to the way that comparator A and B operate in BKP mode. |

**Table 7-11. PAGSEL Decoding(1)**

| PAGSEL | Description | EXTCMP | Comment |
|---|---|---|---|
| 00 | Normal (64k) | Not used | No paged memory |
| 01 | PPAGE<br>(256 — 16K pages) | EXTCMP[5:0] is compared to address bits [21:16](2) | PPAGE[7:0] / XAB[21:14] becomes address bits [21:14][1] |
| 10(3) | DPAGE (reserved)<br>(256 — 4K pages) | EXTCMP[3:0] is compared to address bits [19:16] | DPAGE / XAB[21:14] becomes address bits [19:12] |
| 11[2] | EPAGE (reserved)<br>(256 — 1K pages) | EXTCMP[1:0] is compared to address bits [17:16] | EPAGE / XAB[21:14] becomes address bits [17:10] |

1. See Figure 7-10.
2. Current HCS12 implementations have PPAGE limited to 6 bits. Therefore, EXTCMP[5:4] should be set to 00.
3. Data page (DPAGE) and Extra page (EPAGE) are reserved for implementation on devices that support paged data and extra space.

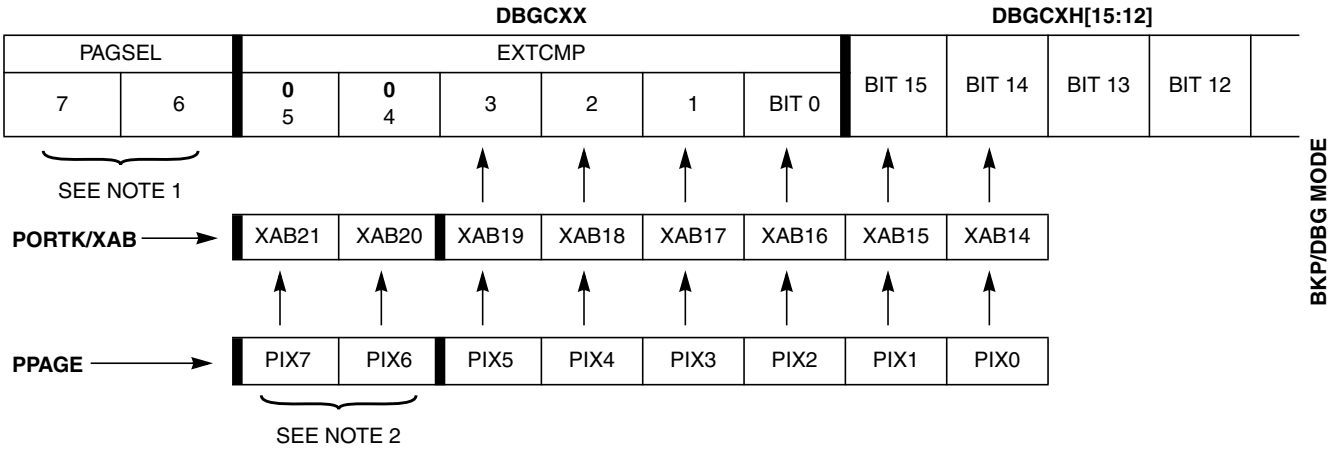


NOTES:
1. In BKP and DBG mode, PAGSEL selects the type of paging as shown in Table 7-11.
2. Current HCS12 implementations are limited to six PPAGE bits, PIX[5:0]. Therefore, EXTCMP[5:4] = 00.

**Figure 7-10. Comparator C Extended Comparison in BKP/DBG Mode**

## 7.3.2.6 Debug Comparator C Register (DBGCC)

Module Base + 0x0026
Starting address location affected by INITRG register setting.

| | 15 | 14 | 13 | 12 | 11 | 10 | 9 | 8 |
|---|---|---|---|---|---|---|---|---|
| R | Bit 15 | Bit 14 | Bit 13 | Bit 12 | Bit 11 | Bit 10 | Bit 9 | Bit 8 |
| W | | | | | | | | |
| Reset | 0 | 0 | 0 | 0 | 0 | 0 | 0 | 0 |

= Unimplemented or Reserved

**Figure 7-11. Debug Comparator C Register High (DBGCCH)**

Module Base + 0x0027
Starting address location affected by INITRG register setting.

| | 7 | 6 | 5 | 4 | 3 | 2 | 1 | 0 |
|---|---|---|---|---|---|---|---|---|
| R | Bit 7 | Bit 6 | Bit 5 | Bit 4 | Bit 3 | Bit 2 | Bit 1 | Bit 0 |
| W | | | | | | | | |
| Reset | 0 | 0 | 0 | 0 | 0 | 0 | 0 | 0 |

= Unimplemented or Reserved

**Figure 7-12. Debug Comparator C Register Low (DBGCCL)**

**Table 7-12. DBGCC Field Descriptions**

| Field | Description |
|---|---|
| 15:0 | **Comparator C Compare Bits** — The comparator C compare bits control whether comparator C will compare the address bus bits [15:0] to a logic 1 or logic 0. See Table 7-13.<br>0 Compare corresponding address bit to a logic 0<br>1 Compare corresponding address bit to a logic 1<br>**Note:** This register will be cleared automatically when the DBG module is armed in LOOP1 mode. |

**Table 7-13. Comparator C Compares**

| PAGSEL | EXTCMP Compare | High-Byte Compare |
|---|---|---|
| **x0** | No compare | DBGCCH[7:0] = AB[15:8] |
| **x1** | EXTCMP[5:0] = XAB[21:16] | DBGCCH[7:0] = XAB[15:14],AB[13:8] |

### 7.3.2.7 Debug Control Register 2 (DBGC2)

Module Base + 0x0028
Starting address location affected by INITRG register setting.

| | 7 | 6 | 5 | 4 | 3 | 2 | 1 | 0 |
|---|---|---|---|---|---|---|---|---|
| R<br>W | BKABEN(1) | FULL | BDM | TAGAB | BKCEN(2) | TAGC2 | RWCEN2 | RWC2 |
| Reset | 0 | 0 | 0 | 0 | 0 | 0 | 0 | 0 |

1. When BKABEN is set (BKP mode), all bits in DBGC2 are available. When BKABEN is cleared and DBG is used in DBG mode, bits FULL and TAGAB have no meaning.
2. These bits can be used in BKP mode and DBG mode (when capture mode is not set in LOOP1) to provide a third breakpoint.

**Figure 7-13. Debug Control Register 2 (DBGC2)**

**Table 7-14. DBGC2 Field Descriptions**

| Field | Description |
|---|---|
| 7<br>BKABEN | **Breakpoint Using Comparator A and B Enable** — This bit enables the breakpoint capability using comparator A and B, when set (BKP mode) the DBGEN bit in DBGC1 cannot be set.<br>0 Breakpoint module off<br>1 Breakpoint module on |
| 6<br>FULL | **Full Breakpoint Mode Enable** — This bit controls whether the breakpoint module is in dual mode or full mode. In full mode, comparator A is used to match address and comparator B is used to match data. See Section 7.4.1.2, “Full Breakpoint Mode,” for more details.<br>0 Dual address mode enabled<br>1 Full breakpoint mode enabled |
| 5<br>BDM | **Background Debug Mode Enable** — This bit determines if the breakpoint causes the system to enter background debug mode (BDM) or initiate a software interrupt (SWI).<br>0 Go to software interrupt on a break request<br>1 Go to BDM on a break request |

**Table 7-14. DBGC2 Field Descriptions (continued)**

| Field | Description |
|---|---|
| 4<br>TAGAB | **Comparator A/B Tag Select** — This bit controls whether the breakpoint will cause a break on the next instruction boundary (force) or on a match that will be an executable opcode (tagged). Non-executed opcodes cannot cause a tagged breakpoint.<br>0 On match, break at the next instruction boundary (force)<br>1 On match, break if/when the instruction is about to be executed (tagged) |
| 3<br>BKCEN | **Breakpoint Comparator C Enable Bit** — This bit enables the breakpoint capability using comparator C.<br>0 Comparator C disabled for breakpoint<br>1 Comparator C enabled for breakpoint<br>**Note:** This bit will be cleared automatically when the DBG module is armed in loop1 mode. |
| 2<br>TAGC | **Comparator C Tag Select** — This bit controls whether the breakpoint will cause a break on the next instruction boundary (force) or on a match that will be an executable opcode (tagged). Non-executed opcodes cannot cause a tagged breakpoint.<br>0 On match, break at the next instruction boundary (force)<br>1 On match, break if/when the instruction is about to be executed (tagged) |
| 1<br>RWCEN | **Read/Write Comparator C Enable Bit** — The RWCEN bit controls whether read or write comparison is enabled for comparator C. RWCEN is not useful for tagged breakpoints.<br>0 Read/Write is not used in comparison<br>1 Read/Write is used in comparison |
| 0<br>RWC | **Read/Write Comparator C Value Bit** — The RWC bit controls whether read or write is used in compare for comparator C. The RWC bit is not used if RWCEN = 0.<br>0 Write cycle will be matched<br>1 Read cycle will be matched |

### 7.3.2.8 Debug Control Register 3 (DBGC3)

Module Base + 0x0029
Starting address location affected by INITRG register setting.

| | 7 | 6 | 5 | 4 | 3 | 2 | 1 | 0 |
|---|---|---|---|---|---|---|---|---|
| R<br>W | BKAMBH(1) | BKAMBL[1] | BKBMBH(2) | BKBMBL[2] | RWAEN | RWA | RWBEN | RWB |
| Reset | 0 | 0 | 0 | 0 | 0 | 0 | 0 | 0 |

1. In DBG mode, BKAMBH:BKAMBL has no meaning and are forced to 0's.
2. In DBG mode, BKBMBH:BKBMBL are used in full mode to qualify data.

**Figure 7-14. Debug Control Register 3 (DBGC3)**

**Table 7-15. DBGC3 Field Descriptions**

| Field | Description |
|---|---|
| 7:6<br>BKAMB[H:L] | **Breakpoint Mask High Byte for First Address** — In dual or full mode, these bits may be used to mask (disable) the comparison of the high and/or low bytes of the first address breakpoint. The functionality is as given in Table 7-16.<br>The x:0 case is for a full address compare. When a program page is selected, the full address compare will be based on bits for a 20-bit compare. The registers used for the compare are {DBGCAX[5:0], DBGCAH[5:0], DBGCAL[7:0]}, where DBGAX[5:0] corresponds to PPAGE[5:0] or extended address bits [19:14] and CPU address [13:0]. When a program page is not selected, the full address compare will be based on bits for a 16-bit compare. The registers used for the compare are {DBGCAH[7:0], DBGCAL[7:0]} which corresponds to CPU address [15:0].<br>**Note:** This extended address compare scheme causes an aliasing problem in BKP mode in which several physical addresses may match with a single logical address. This problem may be avoided by using DBG mode to generate breakpoints.<br>The 1:0 case is not sensible because it would ignore the high order address and compare the low order and expansion addresses. Logic forces this case to compare all address lines (effectively ignoring the BKAMBH control bit).<br>The 1:1 case is useful for triggering a breakpoint on any access to a particular expansion page. This only makes sense if a program page is being accessed so that the breakpoint trigger will occur only if DBGCAX compares. |
| 5:4<br>BKBMB[H:L] | **Breakpoint Mask High Byte and Low Byte of Data (Second Address)** — In dual mode, these bits may be used to mask (disable) the comparison of the high and/or low bytes of the second address breakpoint. The functionality is as given in Table 7-17.<br>The x:0 case is for a full address compare. When a program page is selected, the full address compare will be based on bits for a 20-bit compare. The registers used for the compare are {DBGCBX[5:0], DBGCBH[5:0], DBGCBL[7:0]} where DBGCBX[5:0] corresponds to PPAGE[5:0] or extended address bits [19:14] and CPU address [13:0]. When a program page is not selected, the full address compare will be based on bits for a 16-bit compare. The registers used for the compare are {DBGCBH[7:0], DBGCBL[7:0]} which corresponds to CPU address [15:0].<br>**Note:** This extended address compare scheme causes an aliasing problem in BKP mode in which several physical addresses may match with a single logical address. This problem may be avoided by using DBG mode to generate breakpoints.<br>The 1:0 case is not sensible because it would ignore the high order address and compare the low order and expansion addresses. Logic forces this case to compare all address lines (effectively ignoring the BKBMBH control bit).<br>The 1:1 case is useful for triggering a breakpoint on any access to a particular expansion page. This only makes sense if a program page is being accessed so that the breakpoint trigger will occur only if DBGCBX compares.<br>In full mode, these bits may be used to mask (disable) the comparison of the high and/or low bytes of the data breakpoint. The functionality is as given in Table 7-18. |
| 3<br>RWAEN | **Read/Write Comparator A Enable Bit** — The RWAEN bit controls whether read or write comparison is enabled for comparator A. See Section 7.4.2.1.1, “Read or Write Comparison,” for more information. This bit is not useful for tagged operations.<br>0 Read/Write is not used in comparison<br>1 Read/Write is used in comparison |
| 2<br>RWA | **Read/Write Comparator A Value Bit** — The RWA bit controls whether read or write is used in compare for comparator A. The RWA bit is not used if RWAEN = 0.<br>0 Write cycle will be matched<br>1 Read cycle will be matched |

**Table 7-15. DBGC3 Field Descriptions (continued)**

| Field | Description |
|---|---|
| 1<br>RWBEN | **Read/Write Comparator B Enable Bit** — The RWBEN bit controls whether read or write comparison is enabled for comparator B. See Section 7.4.2.1.1, "Read or Write Comparison," for more information. This bit is not useful for tagged operations.<br>0 Read/Write is not used in comparison<br>1 Read/Write is used in comparison |
| 0<br>RWB | **Read/Write Comparator B Value Bit** — The RWB bit controls whether read or write is used in compare for comparator B. The RWB bit is not used if RWBEN = 0.<br>0 Write cycle will be matched<br>1 Read cycle will be matched<br>**Note:** RWB and RWBEN are not used in full mode. |

**Table 7-16. Breakpoint Mask Bits for First Address**

| BKAMBH:BKAMBL | Address Compare | DBGCAX | DBGCAH | DBGCAL |
|---|---|---|---|---|
| x:0 | Full address compare | Yes(1) | Yes | Yes |
| 0:1 | 256 byte address range | Yes[1] | Yes | No |
| 1:1 | 16K byte address range | Yes[1] | No | No |

1. If PPAGE is selected.

**Table 7-17. Breakpoint Mask Bits for Second Address (Dual Mode)**

| BKBMBH:BKBMBL | Address Compare | DBGCBX | DBGCBH | DBGCBL |
|---|---|---|---|---|
| x:0 | Full address compare | Yes(1) | Yes | Yes |
| 0:1 | 256 byte address range | Yes[1] | Yes | No |
| 1:1 | 16K byte address range | Yes[1] | No | No |

1. If PPAGE is selected.

**Table 7-18. Breakpoint Mask Bits for Data Breakpoints (Full Mode)**

| BKBMBH:BKBMBL | Data Compare | DBGCBX | DBGCBH | DBGCBL |
|---|---|---|---|---|
| 0:0 | High and low byte compare | No(1) | Yes | Yes |
| 0:1 | High byte | No[1] | Yes | No |
| 1:0 | Low byte | No[1] | No | Yes |
| 1:1 | No compare | No[1] | No | No |

1. Expansion addresses for breakpoint B are not applicable in this mode.

### 7.3.2.9 Debug Comparator A Extended Register (DBGCAX)

Module Base + 0x002A
Starting address location affected by INITRG register setting.

| | 7 | 6 | 5 | 4 | 3 | 2 | 1 | 0 |
|---|---|---|---|---|---|---|---|---|
| R<br>W | PAGSEL | | EXTCMP | | | | | |
| Reset | 0 | 0 | 0 | 0 | 0 | 0 | 0 | 0 |

**Figure 7-15. Debug Comparator A Extended Register (DBGCAX)**

**Table 7-19. DBGCAX Field Descriptions**

| Field | Description |
|---|---|
| 7:6<br>PAGSEL | **Page Selector Field** — If DBGEN is set in DBGC1, then PAGSEL selects the type of paging as shown in Table 7-20.<br>DPAGE and EPAGE are not yet implemented so the value in bit 7 will be ignored (i.e., PAGSEL values of 10 and 11 will be interpreted as values of 00 and 01, respectively).<br>In BKP mode, PAGSEL has no meaning and EXTCMP[5:0] are compared to address bits [19:14] if the address is in the FLASH/ROM memory space. |
| 5:0<br>EXTCMP | **Comparator A Extended Compare Bits** — The EXTCMP bits are used as comparison address bits as shown in Table 7-20 along with the appropriate PPAGE, DPAGE, or EPAGE signal from the core. |

**Table 7-20. Comparator A or B Compares**

| Mode | | EXTCMP Compare | High-Byte Compare |
|---|---|---|---|
| BKP(1) | Not FLASH/ROM access | No compare | DBGCxH[7:0] = AB[15:8] |
| | FLASH/ROM access | EXTCMP[5:0] = XAB[19:14] | DBGCxH[5:0] = AB[13:8] |
| DBG(2) | PAGSEL = 00 | No compare | DBGCxH[7:0] = AB[15:8] |
| | PAGSEL = 01 | EXTCMP[5:0] = XAB[21:16] | DBGCxH[7:0] = XAB[15:14], AB[13:8] |

1. See Figure 7-16.
2. See Figure 7-10 (note that while this figure provides extended comparisons for comparator C, the figure also pertains to comparators A and B in DBG mode only).

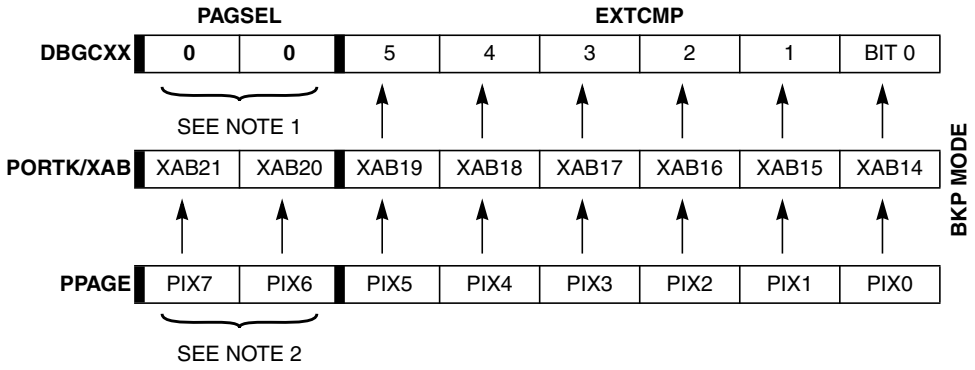


NOTES:
1. In BKP mode, PAGSEL has no functionality. Therefore, set PAGSEL to 00 (reset state).
2. Current HCS12 implementations are limited to six PPAGE bits, PIX[5:0].

**Figure 7-16. Comparators A and B Extended Comparison in BKP Mode**

## 7.3.2.10 Debug Comparator A Register (DBGCA)

Module Base + 0x002B
Starting address location affected by INITRG register setting.

| | 15 | 14 | 13 | 12 | 11 | 10 | 9 | 8 |
|---|---|---|---|---|---|---|---|---|
| R<br>W | Bit 15 | Bit 14 | Bit 13 | Bit 12 | Bit 11 | Bit 10 | Bit 9 | Bit 8 |
| Reset | 0 | 0 | 0 | 0 | 0 | 0 | 0 | 0 |

**Figure 7-17. Debug Comparator A Register High (DBGCAH)**

Module Base + 0x002C
Starting address location affected by INITRG register setting.

| | 7 | 6 | 5 | 4 | 3 | 2 | 1 | 0 |
|---|---|---|---|---|---|---|---|---|
| R<br>W | Bit 7 | Bit 6 | Bit 5 | Bit 4 | Bit 3 | Bit 2 | Bit 1 | Bit 0 |
| Reset | 0 | 0 | 0 | 0 | 0 | 0 | 0 | 0 |

**Figure 7-18. Debug Comparator A Register Low (DBGCAL)**

**Table 7-21. DBGCA Field Descriptions**

| Field | Description |
|---|---|
| 15:0<br>15:0 | **Comparator A Compare Bits** — The comparator A compare bits control whether comparator A compares the address bus bits [15:0] to a logic 1 or logic 0. See Table 7-20.<br>0 Compare corresponding address bit to a logic 0<br>1 Compare corresponding address bit to a logic 1 |

### 7.3.2.11 Debug Comparator B Extended Register (DBGCBX)

Module Base + 0x002D

| | 7 | 6 | 5 | 4 | 3 | 2 | 1 | 0 |
|---|---|---|---|---|---|---|---|---|
| R<br>W | PAGSEL | | EXTCMP | | | | | |
| Reset | 0 | 0 | 0 | 0 | 0 | 0 | 0 | 0 |

**Figure 7-19. Debug Comparator B Extended Register (DBGCBX)**

**Table 7-22. DBGCBX Field Descriptions**

| Field | Description |
|---|---|
| 7:6<br>PAGSEL | **Page Selector Field** — If DBGEN is set in DBGC1, then PAGSEL selects the type of paging as shown in Table 7-11.<br>DPAGE and EPAGE are not yet implemented so the value in bit 7 will be ignored (i.e., PAGSEL values of 10 and 11 will be interpreted as values of 00 and 01, respectively.)<br>In BKP mode, PAGSEL has no meaning and EXTCMP[5:0] are compared to address bits [19:14] if the address is in the FLASH/ROM memory space. |
| 5:0<br>EXTCMP | **Comparator B Extended Compare Bits** — The EXTCMP bits are used as comparison address bits as shown in Table 7-11 along with the appropriate PPAGE, DPAGE, or EPAGE signal from the core. Also see Table 7-20. |

### 7.3.2.12 Debug Comparator B Register (DBGCB)

Module Base + 0x002E
Starting address location affected by INITRG register setting.

| | 15 | 14 | 13 | 12 | 11 | 10 | 9 | 8 |
|---|---|---|---|---|---|---|---|---|
| R<br>W | Bit 15 | Bit 14 | Bit 13 | Bit 12 | Bit 11 | Bit 10 | Bit 9 | Bit 8 |
| Reset | 0 | 0 | 0 | 0 | 0 | 0 | 0 | 0 |

**Figure 7-20. Debug Comparator B Register High (DBGCBH)**

Module Base + 0x002F
Starting address location affected by INITRG register setting.

| | 7 | 6 | 5 | 4 | 3 | 2 | 1 | 0 |
|---|---|---|---|---|---|---|---|---|
| R<br>W | Bit 7 | Bit 6 | Bit 5 | Bit 4 | Bit 3 | Bit 2 | Bit 1 | Bit 0 |
| Reset | 0 | 0 | 0 | 0 | 0 | 0 | 0 | 0 |

**Figure 7-21. Debug Comparator B Register Low (DBGCBL)**

**Table 7-23. DBGCB Field Descriptions**

| Field | Description |
|---|---|
| 15:0<br>15:0 | **Comparator B Compare Bits** — The comparator B compare bits control whether comparator B compares the address bus bits [15:0] or data bus bits [15:0] to a logic 1 or logic 0. See Table 7-20.<br>0 Compare corresponding address bit to a logic 0, compares to data if in Full mode<br>1 Compare corresponding address bit to a logic 1, compares to data if in Full mode |

## 7.4 Functional Description

This section provides a complete functional description of the DBG module. The DBG module can be configured to run in either of two modes, BKP or DBG. BKP mode is enabled by setting BKABEN in DBGC2. DBG mode is enabled by setting DBGEN in DBGC1. Setting BKABEN in DBGC2 overrides the DBGEN in DBGC1 and prevents DBG mode. If the part is in secure mode, DBG mode cannot be enabled.

### 7.4.1 DBG Operating in BKP Mode

In BKP mode, the DBG will be fully backwards compatible with the existing BKP_ST12_A module. The DBGC2 register has four additional bits that were not available on existing BKP_ST12_A modules. As long as these bits are written to either all 1s or all 0s, they should be transparent to the user. All 1s would enable comparator C to be used as a breakpoint, but tagging would be enabled. The match address register would be all 0s if not modified by the user. Therefore, code executing at address 0x0000 would have to occur before a breakpoint based on comparator C would happen.

The DBG module in BKP mode supports two modes of operation: dual address mode and full breakpoint mode. Within each of these modes, forced or tagged breakpoint types can be used. Forced breakpoints occur at the next instruction boundary if a match occurs and tagged breakpoints allow for breaking just before the tagged instruction executes. The action taken upon a successful match can be to either place the CPU in background debug mode or to initiate a software interrupt.

The breakpoint can operate in dual address mode or full breakpoint mode. Each of these modes is discussed in the subsections below.

#### 7.4.1.1 Dual Address Mode

When dual address mode is enabled, two address breakpoints can be set. Each breakpoint can cause the system to enter background debug mode or to initiate a software interrupt based upon the state of BDM in

DBGC2 being logic 1 or logic 0, respectively. BDM requests have a higher priority than SWI requests. No data breakpoints are allowed in this mode.

TAGAB in DBGC2 selects whether the breakpoint mode is forced or tagged. The BKxMBH:L bits in DBGC3 select whether or not the breakpoint is matched exactly or is a range breakpoint. They also select whether the address is matched on the high byte, low byte, both bytes, and/or memory expansion. The RWx and RWxEN bits in DBGC3 select whether the type of bus cycle to match is a read, write, or read/write when performing forced breakpoints.

#### 7.4.1.2 Full Breakpoint Mode

Full breakpoint mode requires a match on address and data for a breakpoint to occur. Upon a successful match, the system will enter background debug mode or initiate a software interrupt based upon the state of BDM in DBGC2 being logic 1 or logic 0, respectively. BDM requests have a higher priority than SWI requests. R/W matches are also allowed in this mode.

TAGAB in DBGC2 selects whether the breakpoint mode is forced or tagged. When TAGAB is set in DBGC2, only addresses are compared and data is ignored. The BKAMBH:L bits in DBGC3 select whether or not the breakpoint is matched exactly, is a range breakpoint, or is in page space. The BKBMBH:L bits in DBGC3 select whether the data is matched on the high byte, low byte, or both bytes. RWA and RWAEN bits in DBGC2 select whether the type of bus cycle to match is a read or a write when performing forced breakpoints. RWB and RWBEN bits in DBGC2 are not used in full breakpoint mode.

**NOTE**

The full trigger mode is designed to be used for either a word access or a byte access, but not both at the same time. Confusing trigger operation (seemingly false triggers or no trigger) can occur if the trigger address occurs in the user program as both byte and word accesses.

#### 7.4.1.3 Breakpoint Priority

Breakpoint operation is first determined by the state of the BDM module. If the BDM module is already active, meaning the CPU is executing out of BDM firmware, breakpoints are not allowed. In addition, while executing a BDM TRACE command, tagging into BDM is not allowed. If BDM is not active, the breakpoint will give priority to BDM requests over SWI requests. This condition applies to both forced and tagged breakpoints.

In all cases, BDM related breakpoints will have priority over those generated by the Breakpoint sub-block. This priority includes breakpoints enabled by the $\overline{\text{TAGLO}}$ and $\overline{\text{TAGHI}}$ external pins of the system that interface with the BDM directly and whose signal information passes through and is used by the breakpoint sub-block.

**NOTE**

BDM should not be entered from a breakpoint unless the ENABLE bit is set in the BDM. Even if the ENABLE bit in the BDM is cleared, the CPU actually executes the BDM firmware code. It checks the ENABLE and returns if ENABLE is not set. If the BDM is not serviced by the monitor then the breakpoint would be re-asserted when the BDM returns to normal CPU flow.

There is no hardware to enforce restriction of breakpoint operation if the BDM is not enabled.

When program control returns from a tagged breakpoint through an RTI or a BDM GO command, it will return to the instruction whose tag generated the breakpoint. Unless breakpoints are disabled or modified in the service routine or active BDM session, the instruction will be tagged again and the breakpoint will be repeated. In the case of BDM breakpoints, this situation can also be avoided by executing a TRACE1 command before the GO to increment the program flow past the tagged instruction.

#### 7.4.1.4 Using Comparator C in BKP Mode

The original BKP_ST12_A module supports two breakpoints. The DBG_ST12_A module can be used in BKP mode and allow a third breakpoint using comparator C. Four additional bits, BKCEN, TAGC, RWCEN, and RWC in DBGC2 in conjunction with additional comparator C address registers, DBGCCX, DBGCCH, and DBGCCL allow the user to set up a third breakpoint. Using PAGSEL in DBGCCX for expanded memory will work differently than the way paged memory is done using comparator A and B in BKP mode. See Section 7.3.2.5, “Debug Comparator C Extended Register (DBGCCX),” for more information on using comparator C.

### 7.4.2 DBG Operating in DBG Mode

Enabling the DBG module in DBG mode, allows the arming, triggering, and storing of data in the trace buffer and can be used to cause CPU breakpoints. The DBG module is made up of three main blocks, the comparators, trace buffer control logic, and the trace buffer.

**NOTE**

In general, there is a latency between the triggering event appearing on the bus and being detected by the DBG circuitry. In general, tagged triggers will be more predictable than forced triggers.

#### 7.4.2.1 Comparators

The DBG contains three comparators, A, B, and C. Comparator A compares the core address bus with the address stored in DBGCAH and DBGCAL. Comparator B compares the core address bus with the address stored in DBGCBH and DBGCBL except in full mode, where it compares the data buses to the data stored in DBGCBH and DBGCBL. Comparator C can be used as a breakpoint generator or as the address comparison unit in the loop1 mode. Matches on comparator A, B, and C are signaled to the trace buffer

control (TBC) block. When PAGSEL = 01, registers DBGCAX, DBGCBX, and DBGCCX are used to match the upper addresses as shown in Table 7-11.

**NOTE**

If a tagged-type C breakpoint is set at the same address as an A/B tagged-type trigger (including the initial entry in an inside or outside range trigger), the C breakpoint will have priority and the trigger will not be recognized.

#### 7.4.2.1.1 Read or Write Comparison

Read or write comparisons are useful only with TRGSEL = 0, because only opcodes should be tagged as they are “read” from memory. RWAEN and RWBEN are ignored when TRGSEL = 1.

In full modes (“A and B” and “A and not B”) RWAEN and RWA are used to select read or write comparisons for both comparators A and B. Table 7-24 shows the effect for RWAEN, RWA, and RW on the DBGCB comparison conditions. The RWBEN and RWB bits are not used and are ignored in full modes.

**Table 7-24. Read or Write Comparison Logic Table**

| RWAEN bit | RWA bit | RW signal | Comment |
|---|---|---|---|
| 0 | x | 0 | Write data bus |
| 0 | x | 1 | Read data bus |
| 1 | 0 | 0 | Write data bus |
| 1 | 0 | 1 | No data bus compare since RW=1 |
| 1 | 1 | 0 | No data bus compare since RW=0 |
| 1 | 1 | 1 | Read data bus |

#### 7.4.2.1.2 Trigger Selection

The TRGSEL bit in DBGC1 is used to determine the triggering condition in DBG mode. TRGSEL applies to both trigger A and B except in the event only trigger modes. By setting TRGSEL, the comparators A and B will qualify a match with the output of opcode tracking logic and a trigger occurs before the tagged instruction executes (tagged-type trigger). With the TRGSEL bit cleared, a comparator match forces a trigger when the matching condition occurs (force-type trigger).

**NOTE**

If the TRGSEL is set, the address stored in the comparator match address registers must be an opcode address for the trigger to occur.

### 7.4.2.2 Trace Buffer Control (TBC)

The TBC is the main controller for the DBG module. Its function is to decide whether data should be stored in the trace buffer based on the trigger mode and the match signals from the comparator. The TBC also determines whether a request to break the CPU should occur.

#### 7.4.2.3 Begin- and End-Trigger

The definitions of begin- and end-trigger as used in the DBG module are as follows:

- Begin-trigger: Storage in trace buffer occurs after the trigger and continues until 64 locations are filled.
- End-trigger: Storage in trace buffer occurs until the trigger, with the least recent data falling out of the trace buffer if more than 64 words are collected.

#### 7.4.2.4 Arming the DBG Module

In DBG mode, arming occurs by setting DBGEN and ARM in DBGC1. The ARM bit in DBGC1 is cleared when the trigger condition is met in end-trigger mode or when the Trace Buffer is filled in begin-trigger mode. The TBC logic determines whether a trigger condition has been met based on the trigger mode and the trigger selection.

#### 7.4.2.5 Trigger Modes

The DBG module supports nine trigger modes. The trigger modes are encoded as shown in Table 7-6. The trigger mode is used as a qualifier for either starting or ending the storing of data in the trace buffer. When the match condition is met, the appropriate flag A or B is set in DBGSC. Arming the DBG module clears the A, B, and C flags in DBGSC. In all trigger modes except for the event-only modes and DETAIL capture mode, change-of-flow addresses are stored in the trace buffer. In the event-only modes only the value on the data bus at the trigger event B will be stored. In DETAIL capture mode address and data for all cycles except program fetch (P) and free (f) cycles are stored in trace buffer.

##### 7.4.2.5.1 A Only

In the A only trigger mode, if the match condition for A is met, the A flag in DBGSC is set and a trigger occurs.

##### 7.4.2.5.2 A or B

In the A or B trigger mode, if the match condition for A or B is met, the corresponding flag in DBGSC is set and a trigger occurs.

##### 7.4.2.5.3 A then B

In the A then B trigger mode, the match condition for A must be met before the match condition for B is compared. When the match condition for A or B is met, the corresponding flag in DBGSC is set. The trigger occurs only after A then B have matched.

**NOTE**

When tagging and using A then B, if addresses A and B are close together, then B may not complete the trigger sequence. This occurs when A and B are in the instruction queue at the same time. Basically the A trigger has not yet occurred, so the B instruction is not tagged. Generally, if address B is at

least six addresses higher than address A (or B is lower than A) and there are not changes of flow to put these in the queue at the same time, then this operation should trigger properly.

#### 7.4.2.5.4 Event-Only B (Store Data)

In the event-only B trigger mode, if the match condition for B is met, the B flag in DBGSC is set and a trigger occurs. The event-only B trigger mode is considered a begin-trigger type and the BEGIN bit in DBGC1 is ignored. Event-only B is incompatible with instruction tagging (TRGSEL = 1), and thus the value of TRGSEL is ignored. Please refer to Section 7.4.2.7, “Storage Memory,” for more information.

This trigger mode is incompatible with the detail capture mode so the detail capture mode will have priority. TRGSEL and BEGIN will not be ignored and this trigger mode will behave as if it were “B only”.

#### 7.4.2.5.5 A then Event-Only B (Store Data)

In the A then event-only B trigger mode, the match condition for A must be met before the match condition for B is compared, after the A match has occurred, a trigger occurs each time B matches. When the match condition for A or B is met, the corresponding flag in DBGSC is set. The A then event-only B trigger mode is considered a begin-trigger type and BEGIN in DBGC1 is ignored. TRGSEL in DBGC1 applies only to the match condition for A. Please refer to Section 7.4.2.7, “Storage Memory,” for more information.

This trigger mode is incompatible with the detail capture mode so the detail capture mode will have priority. TRGSEL and BEGIN will not be ignored and this trigger mode will be the same as A then B.

#### 7.4.2.5.6 A and B (Full Mode)

In the A and B trigger mode, comparator A compares to the address bus and comparator B compares to the data bus. In the A and B trigger mode, if the match condition for A and B happen on the same bus cycle, both the A and B flags in the DBGSC register are set and a trigger occurs.

If TRGSEL = 1, only matches from comparator A are used to determine if the trigger condition is met and comparator B matches are ignored. If TRGSEL = 0, full-word data matches on an odd address boundary (misaligned access) do not work unless the access is to a RAM that manages misaligned accesses in a single clock cycle (which is typical of RAM modules used in HCS12 MCUs).

#### 7.4.2.5.7 A and Not B (Full Mode)

In the A and not B trigger mode, comparator A compares to the address bus and comparator B compares to the data bus. In the A and not B trigger mode, if the match condition for A and not B happen on the same bus cycle, both the A and B flags in DBGSC are set and a trigger occurs.

If TRGSEL = 1, only matches from comparator A are used to determine if the trigger condition is met and comparator B matches are ignored. As described in Section 7.4.2.5.6, “A and B (Full Mode),” full-word data compares on misaligned accesses will not match expected data (and thus will cause a trigger in this mode) unless the access is to a RAM that manages misaligned accesses in a single clock cycle.

#### 7.4.2.5.8 Inside Range (A ≤ address ≤ B)

In the inside range trigger mode, if the match condition for A and B happen on the same bus cycle, both the A and B flags in DBGSC are set and a trigger occurs. If a match condition on only A or only B occurs no flags are set. If TRGSEL = 1, the inside range is accurate only to word boundaries. If TRGSEL = 0, an aligned word access which straddles the range boundary will cause a trigger only if the aligned address is within the range.

#### 7.4.2.5.9 Outside Range (address < A or address > B)

In the outside range trigger mode, if the match condition for A or B is met, the corresponding flag in DBGSC is set and a trigger occurs. If TRGSEL = 1, the outside range is accurate only to word boundaries. If TRGSEL = 0, an aligned word access which straddles the range boundary will cause a trigger only if the aligned address is outside the range.

#### 7.4.2.5.10 Control Bit Priorities

The definitions of some of the control bits are incompatible with each other. Table 7-25 and the notes associated with it summarize how these incompatibilities are managed:

- Read/write comparisons are not compatible with TRGSEL = 1. Therefore, RWAEN and RWBEN are ignored.
- Event-only trigger modes are always considered a begin-type trigger. See Section 7.4.2.8.1, “Storing with Begin-Trigger,” and Section 7.4.2.8.2, “Storing with End-Trigger.”
- Detail capture mode has priority over the event-only trigger/capture modes. Therefore, event-only modes have no meaning in detail mode and their functions default to similar trigger modes.

**Table 7-25. Resolution of Mode Conflicts**

| Mode | Normal / Loop1 | | Detail | |
|---|---|---|---|---|
| | Tag | Force | Tag | Force |
| A only | | | | |
| A or B | | | | |
| A then B | | | | |
| Event-only B | 1 | | 1, 3 | 3 |
| A then event-only B | 2 | | 4 | 4 |
| A and B (full mode) | 5 | | 5 | |
| A and not B (full mode) | 5 | | 5 | |
| Inside range | 6 | | 6 | |
| Outside range | 6 | | 6 | |

1 — Ignored — same as force
2 — Ignored for comparator B
3 — Reduces to effectively “B only”
4 — Works same as A then B
5 — Reduces to effectively “A only” — B not compared
6 — Only accurate to word boundaries

#### 7.4.2.6 Capture Modes

The DBG in DBG mode can operate in four capture modes. These modes are described in the following subsections.

##### 7.4.2.6.1 Normal Mode

In normal mode, the DBG module uses comparator A and B as triggering devices. Change-of-flow information or data will be stored depending on TRG in DBGSC.

##### 7.4.2.6.2 Loop1 Mode

The intent of loop1 mode is to prevent the trace buffer from being filled entirely with duplicate information from a looping construct such as delays using the DBNE instruction or polling loops using BRSET/BRCLR instructions. Immediately after address information is placed in the trace buffer, the DBG module writes this value into the C comparator and the C comparator is placed in ignore address mode. This will prevent duplicate address entries in the trace buffer resulting from repeated bit-conditional branches. Comparator C will be cleared when the ARM bit is set in loop1 mode to prevent the previous contents of the register from interfering with loop1 mode operation. Breakpoints based on comparator C are disabled.

Loop1 mode only inhibits duplicate source address entries that would typically be stored in most tight looping constructs. It will not inhibit repeated entries of destination addresses or vector addresses, because repeated entries of these would most likely indicate a bug in the user's code that the DBG module is designed to help find.

**NOTE**

In certain very tight loops, the source address will have already been fetched again before the C comparator is updated. This results in the source address being stored twice before further duplicate entries are suppressed. This condition occurs with branch-on-bit instructions when the branch is fetched by the first P-cycle of the branch or with loop-construct instructions in which the branch is fetched with the first or second P cycle. See examples below:

```
LOOP  INCX                   ; 1-byte instruction fetched by 1st P-cycle of BRCLR
      BRCLR CMPTMP,#$0c,LOOP ; the BRCLR instruction also will be fetched by 1st P-cycle of BRCLR

LOOP2 BRN   *                ; 2-byte instruction fetched by 1st P-cycle of DBNE
      NOP                    ; 1-byte instruction fetched by 2nd P-cycle of DBNE
      DBNE  A,LOOP2          ; this instruction also fetched by 2nd P-cycle of DBNE
```

**NOTE**

Loop1 mode does not support paged memory, and inhibits duplicate entries in the trace buffer based solely on the CPU address. There is a remote possibility of an erroneous address match if program flow alternates between paged and unpaged memory space.

#### 7.4.2.6.3 Detail Mode

In the detail mode, address and data for all cycles except program fetch (P) and free (f) cycles are stored in trace buffer. This mode is intended to supply additional information on indexed, indirect addressing modes where storing only the destination address would not provide all information required for a user to determine where his code was in error.

#### 7.4.2.6.4 Profile Mode

This mode is intended to allow a host computer to poll a running target and provide a histogram of program execution. Each read of the trace buffer address will return the address of the last instruction executed. The DBGCNT register is not incremented and the trace buffer does not get filled. The ARM bit is not used and all breakpoints and all other debug functions will be disabled.

### 7.4.2.7 Storage Memory

The storage memory is a 64 words deep by 16-bits wide dual port RAM array. The CPU accesses the RAM array through a single memory location window (DBGTBH:DBGTBL). The DBG module stores trace information in the RAM array in a circular buffer format. As data is read via the CPU, a pointer into the RAM will increment so that the next CPU read will receive fresh information. In all trigger modes except for event-only and detail capture mode, the data stored in the trace buffer will be change-of-flow addresses. change-of-flow addresses are defined as follows:

- Source address of conditional branches (long, short, BRSET, and loop constructs) taken
- Destination address of indexed JMP, JSR, and CALL instruction
- Destination address of RTI, RTS, and RTC instructions
- Vector address of interrupts except for SWI and BDM vectors

In the event-only trigger modes only the 16-bit data bus value corresponding to the event is stored. In the detail capture mode, address and then data are stored for all cycles except program fetch (P) and free (f) cycles.

### 7.4.2.8 Storing Data in Memory Storage Buffer

#### 7.4.2.8.1 Storing with Begin-Trigger

Storing with begin-trigger can be used in all trigger modes. When DBG mode is enabled and armed in the begin-trigger mode, data is not stored in the trace buffer until the trigger condition is met. As soon as the trigger condition is met, the DBG module will remain armed until 64 words are stored in the trace buffer. If the trigger is at the address of the change-of-flow instruction the change-of-flow associated with the trigger event will be stored in the trace buffer.

#### 7.4.2.8.2 Storing with End-Trigger

Storing with end-trigger cannot be used in event-only trigger modes. When DBG mode is enabled and armed in the end-trigger mode, data is stored in the trace buffer until the trigger condition is met. When the trigger condition is met, the DBG module will become de-armed and no more data will be stored. If

the trigger is at the address of a change-of-flow address the trigger event will not be stored in the trace buffer.

#### 7.4.2.9 Reading Data from Trace Buffer

The data stored in the trace buffer can be read using either the background debug module (BDM) module or the CPU provided the DBG module is enabled and not armed. The trace buffer data is read out first-in first-out. By reading CNT in DBGCNT the number of valid words can be determined. CNT will not decrement as data is read from DBGTBH:DBGTBL. The trace buffer data is read by reading DBGTBH:DBGTBL with a 16-bit read. Each time DBGTBH:DBGTBL is read, a pointer in the DBG will be incremented to allow reading of the next word.

Reading the trace buffer while the DBG module is armed will return invalid data and no shifting of the RAM pointer will occur.

**NOTE**

The trace buffer should be read with the DBG module enabled and in the same capture mode that the data was recorded. The contents of the trace buffer counter register (DBGCNT) are resolved differently in detail mode verses the other modes and may lead to incorrect interpretation of the trace buffer data.

### 7.4.3 Breakpoints

There are two ways of getting a breakpoint in DBG mode. One is based on the trigger condition of the trigger mode using comparator A and/or B, and the other is using comparator C. External breakpoints generated using the $\overline{\text{TAGHI}}$ and $\overline{\text{TAGLO}}$ external pins are disabled in DBG mode.

#### 7.4.3.1 Breakpoint Based on Comparator A and B

A breakpoint request to the CPU can be enabled by setting DBGBRK in DBGC1. The value of BEGIN in DBGC1 determines when the breakpoint request to the CPU will occur. When BEGIN in DBGC1 is set, begin-trigger is selected and the breakpoint request will not occur until the trace buffer is filled with 64 words. When BEGIN in DBGC1 is cleared, end-trigger is selected and the breakpoint request will occur immediately at the trigger cycle.

There are two types of breakpoint requests supported by the DBG module, tagged and forced. Tagged breakpoints are associated with opcode addresses and allow breaking just before a specific instruction executes. Forced breakpoints are not associated with opcode addresses and allow breaking at the next instruction boundary. The type of breakpoint based on comparators A and B is determined by TRGSEL in the DBGC1 register (TRGSEL = 1 for tagged breakpoint, TRGSEL = 0 for forced breakpoint). Table 7-26 illustrates the type of breakpoint that will occur based on the debug run.

**Table 7-26. Breakpoint Setup**

| BEGIN | TRGSEL | DBGBRK | Type of Debug Run |
|---|---|---|---|
| 0 | 0 | 0 | Fill trace buffer until trigger address (no CPU breakpoint — keep running) |
| 0 | 0 | 1 | Fill trace buffer until trigger address, then a forced breakpoint request occurs |
| 0 | 1 | 0 | Fill trace buffer until trigger opcode is about to execute (no CPU breakpoint — keep running) |
| 0 | 1 | 1 | Fill trace buffer until trigger opcode about to execute, then a tagged breakpoint request occurs |
| 1 | 0 | 0 | Start trace buffer at trigger address (no CPU breakpoint — keep running) |
| 1 | 0 | 1 | Start trace buffer at trigger address, a forced breakpoint request occurs when trace buffer is full |
| 1 | 1 | 0 | Start trace buffer at trigger opcode (no CPU breakpoint — keep running) |
| 1 | 1 | 1 | Start trace buffer at trigger opcode, a forced breakpoint request occurs when trace buffer is full |

#### 7.4.3.2 Breakpoint Based on Comparator C

A breakpoint request to the CPU can be created if BKCEN in DBGC2 is set. Breakpoints based on a successful comparator C match can be accomplished regardless of the mode of operation for comparator A or B, and do not affect the status of the ARM bit. TAGC in DBGC2 is used to select either tagged or forced breakpoint requests for comparator C. Breakpoints based on comparator C are disabled in LOOP1 mode.

**NOTE**

Because breakpoints cannot be disabled when the DBG is armed, one must be careful to avoid an “infinite breakpoint loop” when using tagged-type C breakpoints while the DBG is armed. If BDM breakpoints are selected, executing a TRACE1 instruction before the GO instruction is the recommended way to avoid re-triggering a breakpoint if one does not wish to de-arm the DBG. If SWI breakpoints are selected, disarming the DBG in the SWI interrupt service routine is the recommended way to avoid re-triggering a breakpoint.

## 7.5 Resets

The DBG module is disabled after reset.

The DBG module cannot cause a MCU reset.

## 7.6 Interrupts

The DBG contains one interrupt source. If a breakpoint is requested and BDM in DBGC2 is cleared, an SWI interrupt will be generated.

# Chapter 8
# Analog-to-Digital Converter (ATD10B8C) Block Description

## 8.1 Introduction

The ATD10B8C is an 8-channel, 10-bit, multiplexed input successive approximation analog-to-digital converter. Refer to device electrical specifications for ATD accuracy.

The block is designed to be upwards compatible with the 68HC11 standard 8-bit A/D converter. In addition, there are new operating modes that are unique to the HC12 design.

### 8.1.1 Features

- 8/10-bit resolution.
- 7 µsec, 10-bit single conversion time.
- Sample buffer amplifier.
- Programmable sample time.
- Left/right justified, signed/unsigned result data.
- External trigger control.
- Conversion completion interrupt generation.
- Analog input multiplexer for eight analog input channels.
- Analog/digital input pin multiplexing.
- 1-to-8 conversion sequence lengths.
- Continuous conversion mode.
- Multiple channel scans.

### 8.1.2 Modes of Operation

#### 8.1.2.1 Conversion Modes

There is software programmable selection between performing **single** or **continuous conversion** on a **single channel** or **multiple channels**.

#### 8.1.2.2 MCU Operating Modes

- **Stop Mode**

  Entering stop mode causes all clocks to halt and thus the system is placed in a minimum power standby mode. This aborts any conversion sequence in progress. During recovery from stop mode, there must be a minimum delay for the stop recovery time, $t_{SR}$, before initiating a new ATD conversion sequence.

- **Wait Mode**

  Entering wait mode the ATD conversion either continues or aborts for low power depending on the logical value of the AWAIT bit.

- **Freeze Mode**

  In freeze mode the ATD10B8C will behave according to the logical values of the FRZ1 and FRZ0 bits. This is useful for debugging and emulation.

### 8.1.3 Block Diagram

Figure 8-1 is a block diagram of the ATD.

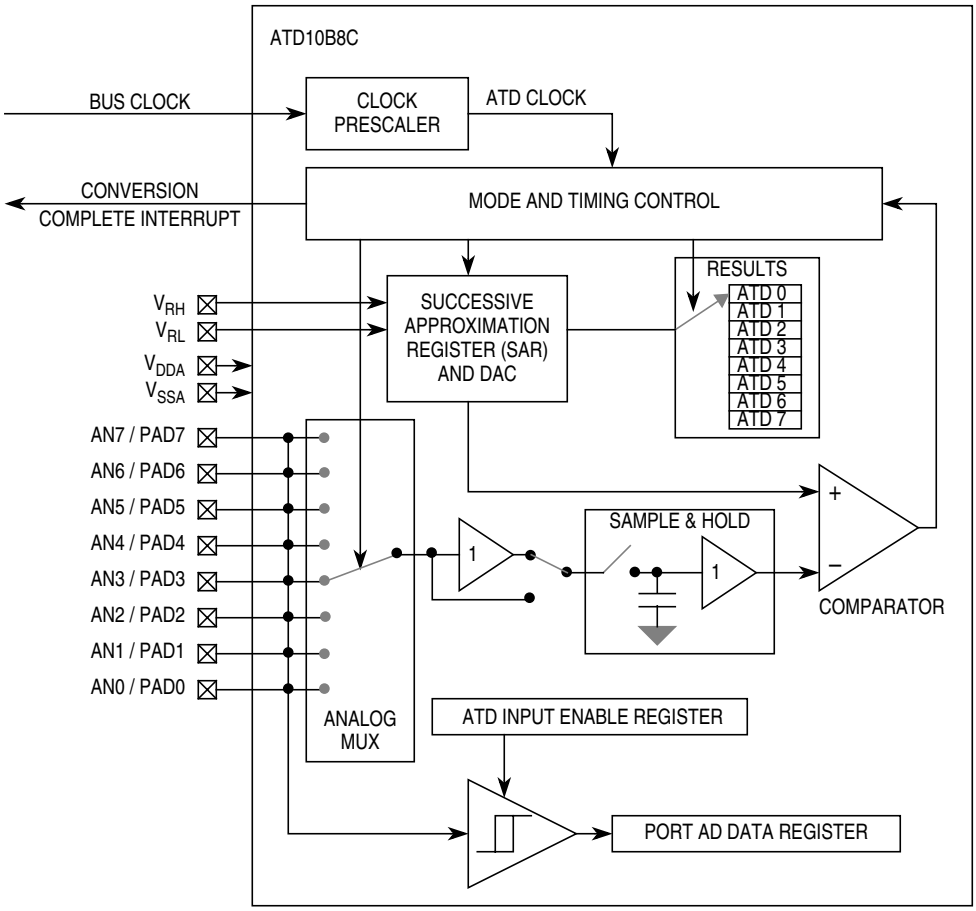


**Figure 8-1. ATD10B8C Block Diagram**

## 8.2 Signal Description

The ATD10B8C has a total of 12 external pins.

### 8.2.1 AN7 / ETRIG / PAD7

This pin serves as the analog input channel 7. It can be configured to provide an external trigger for the ATD conversion. It can be configured as general-purpose digital I/O.

### 8.2.2 AN6 / PAD6

This pin serves as the analog input channel 6. It can be configured as general-purpose digital I/O.

### 8.2.3 AN5 / PAD5

This pin serves as the analog input channel 5. It can be configured as general-purpose digital I/O.

### 8.2.4 AN4 / PAD4

This pin serves as the analog input channel 4. It can be configured as general-purpose digital I/O.

### 8.2.5 AN3 / PAD3

This pin serves as the analog input channel 3. It can be configured as general-purpose digital I/O.

### 8.2.6 AN2 / PAD2

This pin serves as the analog input channel 2. It can be configured as general-purpose digital I/O.

### 8.2.7 AN1 / PAD1

This pin serves as the analog input channel 1. It can be configured as general-purpose digital I/O.

### 8.2.8 AN0 / PAD0

This pin serves as the analog input channel 0. It can be configured as general-purpose digital I/O.

### 8.2.9 $V_{RH}$, $V_{RL}$

$V_{RH}$ is the high reference voltage and $V_{RL}$ is the low reference voltage for ATD conversion.

### 8.2.10 $V_{DDA}$, $V_{SSA}$

These pins are the power supplies for the analog circuitry of the ATD10B8C block.

## 8.3 Memory Map and Registers

This section provides a detailed description of all registers accessible in the ATD10B8C.

### 8.3.1 Module Memory Map

Figure 8-2 gives an overview on all ATD10B8C registers.

| Address | Name | | Bit 7 | 6 | 5 | 4 | 3 | 2 | 1 | Bit 0 |
|---|---|---|---|---|---|---|---|---|---|---|
| 0x0000 | ATDCTL0 | R | 0 | 0 | 0 | 0 | 0 | 0 | 0 | 0 |
| | | W | | | | | | | | |
| 0x0001 | ATDCTL1 | R | 0 | 0 | 0 | 0 | 0 | 0 | 0 | 0 |
| | | W | | | | | | | | |
| 0x0002 | ATDCTL2 | R | ADPU | AFFC | AWAI | ETRIGLE | ETRIGP | ETRIGE | ASCIE | ASCIF |
| | | W | | | | | | | | |
| 0x0003 | ATDCTL3 | R | 0 | S8C | S4C | S2C | S1C | FIFO | FRZ1 | FRZ0 |
| | | W | | | | | | | | |
| 0x0004 | ATDCTL4 | R | SRES8 | SMP1 | SMP0 | PRS4 | PRS3 | PRS2 | PRS1 | PRS0 |
| | | W | | | | | | | | |
| 0x0005 | ATDCTL5 | R | DJM | DSGN | SCAN | MULT | 0 | CC | CB | CA |
| | | W | | | | | | | | |
| 0x0006 | ATDSTAT0 | R | SCF | 0 | ETORF | FIFOR | 0 | CC2 | CC1 | CC0 |
| | | W | | | | | | | | |
| 0x0007 | Unimplemented | R | 0 | 0 | 0 | 0 | 0 | 0 | 0 | 0 |
| | | W | | | | | | | | |
| 0x0008 | ATDTEST0 | R | U | U | U | U | U | U | U | U |
| | | W | | | | | | | | |
| 0x0009 | ATDTEST1 | R | U | U | U | U | U | U | U | SC |
| | | W | | | | | | | | |
| 0x000A | Unimplemented | R | 0 | 0 | 0 | 0 | 0 | 0 | 0 | 0 |
| | | W | | | | | | | | |
| 0x000B | ATDSTAT1 | R | CCF7 | CCF6 | CCF5 | CCF4 | CCF3 | CCF2 | CCF1 | CCF0 |
| | | W | | | | | | | | |
| 0x000C | Unimplemented | R | 0 | 0 | 0 | 0 | 0 | 0 | 0 | 0 |
| | | W | | | | | | | | |
| 0x000D | ATDDIEN | R | IEN7 | IEN6 | IEN5 | IEN4 | IEN3 | IEN2 | IEN1 | IEN0 |
| | | W | | | | | | | | |
| 0x000E | Unimplemented | R | 0 | 0 | 0 | 0 | 0 | 0 | 0 | 0 |
| | | W | | | | | | | | |
| 0x000F | PORTAD | R | PTAD7 | PTAD6 | PTAD5 | PTAD4 | PTAD3 | PTAD2 | PTAD1 | PTAD0 |
| | | W | | | | | | | | |

= Unimplemented or Reserved

**Figure 8-2. ATD Register Summary (Sheet 1 of 4)**

| Address | Name | | Bit 7 | 6 | 5 | 4 | 3 | 2 | 1 | Bit 0 |
|---|---|---|---|---|---|---|---|---|---|---|
| **Left Justified Result Data** | | | | | | | | | | |
| 0x0010 | ATDDR0H | R | BIT 9 MSB<br>BIT 7 MSB | BIT 8<br>BIT 6 | BIT 7<br>BIT 5 | BIT 6<br>BIT 4 | BIT 5<br>BIT 3 | BIT 4<br>BIT 2 | BIT 3<br>BIT 1 | BIT 2<br>BIT 0 |
| | | W | | | | | | | | |
| 0x0011 | ATDDR0L | R | BIT 1<br>u | BIT 0<br>u | 0<br>0 | 0<br>0 | 0<br>0 | 0<br>0 | 0<br>0 | 0<br>0 |
| | | W | | | | | | | | |
| 0x0012 | ATDDR1H | R | BIT 9 MSB<br>BIT 7 MSB | BIT 8<br>BIT 6 | BIT 7<br>BIT 5 | BIT 6<br>BIT 4 | BIT 5<br>BIT 3 | BIT 4<br>BIT 2 | BIT 3<br>BIT 1 | BIT 2<br>BIT 0 |
| | | W | | | | | | | | |
| 0x0013 | ATDDR1L | R | BIT 1<br>u | BIT 0<br>u | 0<br>0 | 0<br>0 | 0<br>0 | 0<br>0 | 0<br>0 | 0<br>0 |
| | | W | | | | | | | | |
| 0x0014 | ATDDR2H | R | BIT 9 MSB<br>BIT 7 MSB | BIT 8<br>BIT 6 | BIT 7<br>BIT 5 | BIT 6<br>BIT 4 | BIT 5<br>BIT 3 | BIT 4<br>BIT 2 | BIT 3<br>BIT 1 | BIT 2<br>BIT 0 |
| | | W | | | | | | | | |
| 0x0015 | ATDDR2L | R | BIT 1<br>u | BIT 0<br>u | 0<br>0 | 0<br>0 | 0<br>0 | 0<br>0 | 0<br>0 | 0<br>0 |
| | | W | | | | | | | | |
| 0x0016 | ATDDR3H | R | BIT 9 MSB<br>BIT 7 MSB | BIT 8<br>BIT 6 | BIT 7<br>BIT 5 | BIT 6<br>BIT 4 | BIT 5<br>BIT 3 | BIT 4<br>BIT 2 | BIT 3<br>BIT 1 | BIT 2<br>BIT 0 |
| | | W | | | | | | | | |
| 0x0017 | ATDDR3L | R | BIT 1<br>u | BIT 0<br>u | 0<br>0 | 0<br>0 | 0<br>0 | 0<br>0 | 0<br>0 | 0<br>0 |
| | | W | | | | | | | | |
| 0x0018 | ATDDR4H | R | BIT 9 MSB<br>BIT 7 MSB | BIT 8<br>BIT 6 | BIT 7<br>BIT 5 | BIT 6<br>BIT 4 | BIT 5<br>BIT 3 | BIT 4<br>BIT 2 | BIT 3<br>BIT 1 | BIT 2<br>BIT 0 |
| | | W | | | | | | | | |
| 0x0019 | ATDDR4L | R | BIT 1<br>u | BIT 0<br>u | 0<br>0 | 0<br>0 | 0<br>0 | 0<br>0 | 0<br>0 | 0<br>0 |
| | | W | | | | | | | | |
| 0x001A | ATDDR5H | R | BIT 9 MSB<br>BIT 7 MSB | BIT 8<br>BIT 6 | BIT 7<br>BIT 5 | BIT 6<br>BIT 4 | BIT 5<br>BIT 3 | BIT 4<br>BIT 2 | BIT 3<br>BIT 1 | BIT 2<br>BIT 0 |
| | | W | | | | | | | | |
| 0x001B | ATDDR5L | R | BIT 1<br>u | BIT 0<br>u | 0<br>0 | 0<br>0 | 0<br>0 | 0<br>0 | 0<br>0 | 0<br>0 |
| | | W | | | | | | | | |
| 0x001C | ATDDR6H | R | BIT 9 MSB<br>BIT 7 MSB | BIT 8<br>BIT 6 | BIT 7<br>BIT 5 | BIT 6<br>BIT 4 | BIT 5<br>BIT 3 | BIT 4<br>BIT 2 | BIT 3<br>BIT 1 | BIT 2<br>BIT 0 |
| | | W | | | | | | | | |
| 0x001D | ATDDR6L | R | BIT 1<br>u | BIT 0<br>u | 0<br>0 | 0<br>0 | 0<br>0 | 0<br>0 | 0<br>0 | 0<br>0 |
| | | W | | | | | | | | |

= Unimplemented or Reserved

**Figure 8-2. ATD Register Summary (Sheet 2 of 4)**

| Address | Name | | Bit 7 | 6 | 5 | 4 | 3 | 2 | 1 | Bit 0 |
|---|---|---|---|---|---|---|---|---|---|---|
| 0x001E | ATDDR7H | R | BIT 9 MSB<br>BIT 7 MSB | BIT 8<br>BIT 6 | BIT 7<br>BIT 5 | BIT 6<br>BIT 4 | BIT 5<br>BIT 3 | BIT 4<br>BIT 2 | BIT 3<br>BIT 1 | BIT 2<br>BIT 0 |
| | | W | | | | | | | | |
| 0x001F | ATDDR7L | R | BIT 1<br>u | BIT 0<br>u | 0<br>0 | 0<br>0 | 0<br>0 | 0<br>0 | 0<br>0 | 0<br>0 |
| | | W | | | | | | | | |
| **Right Justified Result Data** | | | | | | | | | | |
| 0x0010 | ATDDR0H | R | 0<br>0 | 0<br>0 | 0<br>0 | 0<br>0 | 0<br>0 | 0<br>0 | BIT 9 MSB<br>0 | BIT 8<br>0 |
| | | W | | | | | | | | |
| 0x0011 | ATDDR0L | R | BIT 7<br>BIT 7 MSB | BIT 6<br>BIT 6 | BIT 5<br>BIT 5 | BIT 4<br>BIT 4 | BIT 3<br>BIT 3 | BIT 2<br>BIT 2 | BIT 1<br>BIT 1 | BIT 0<br>BIT 0 |
| | | W | | | | | | | | |
| 0x0012 | ATDDR1H | R | 0<br>0 | 0<br>0 | 0<br>0 | 0<br>0 | 0<br>0 | 0<br>0 | BIT 9 MSB<br>0 | BIT 8<br>0 |
| | | W | | | | | | | | |
| 0x0013 | ATDDR1L | R | BIT 7<br>BIT 7 MSB | BIT 6<br>BIT 6 | BIT 5<br>BIT 5 | BIT 4<br>BIT 4 | BIT 3<br>BIT 3 | BIT 2<br>BIT 2 | BIT 1<br>BIT 1 | BIT 0<br>BIT 0 |
| | | W | | | | | | | | |
| 0x0014 | ATDDR2H | R | 0<br>0 | 0<br>0 | 0<br>0 | 0<br>0 | 0<br>0 | 0<br>0 | BIT 9 MSB<br>0 | BIT 8<br>0 |
| | | W | | | | | | | | |
| 0x0015 | ATDDR2L | R | BIT 7<br>BIT 7 MSB | BIT 6<br>BIT 6 | BIT 5<br>BIT 5 | BIT 4<br>BIT 4 | BIT 3<br>BIT 3 | BIT 2<br>BIT 2 | BIT 1<br>BIT 1 | BIT 0<br>BIT 0 |
| | | W | | | | | | | | |
| 0x0016 | ATDDR3H | R | 0<br>0 | 0<br>0 | 0<br>0 | 0<br>0 | 0<br>0 | 0<br>0 | BIT 9 MSB<br>0 | BIT 8<br>0 |
| | | W | | | | | | | | |
| 0x0017 | ATDDR3L | R | BIT 7<br>BIT 7 MSB | BIT 6<br>BIT 6 | BIT 5<br>BIT 5 | BIT 4<br>BIT 4 | BIT 3<br>BIT 3 | BIT 2<br>BIT 2 | BIT 1<br>BIT 1 | BIT 0<br>BIT 0 |
| | | W | | | | | | | | |
| 0x0018 | ATDDR4H | R | 0<br>0 | 0<br>0 | 0<br>0 | 0<br>0 | 0<br>0 | 0<br>0 | BIT 9 MSB<br>0 | BIT 8<br>0 |
| | | W | | | | | | | | |
| 0x0019 | ATDDR4L | R | BIT 7<br>BIT 7 MSB | BIT 6<br>BIT 6 | BIT 5<br>BIT 5 | BIT 4<br>BIT 4 | BIT 3<br>BIT 3 | BIT 2<br>BIT 2 | BIT 1<br>BIT 1 | BIT 0<br>BIT 0 |
| | | W | | | | | | | | |
| 0x001A | ATDDR5H | R | 0<br>0 | 0<br>0 | 0<br>0 | 0<br>0 | 0<br>0 | 0<br>0 | BIT 9 MSB<br>0 | BIT 8<br>0 |
| | | W | | | | | | | | |
| 0x001B | ATDDR5L | R | BIT 7<br>BIT 7 MSB | BIT 6<br>BIT 6 | BIT 5<br>BIT 5 | BIT 4<br>BIT 4 | BIT 3<br>BIT 3 | BIT 2<br>BIT 2 | BIT 1<br>BIT 1 | BIT 0<br>BIT 0 |
| | | W | | | | | | | | |

= Unimplemented or Reserved

**Figure 8-2. ATD Register Summary (Sheet 3 of 4)**

| Address | Name | | Bit 7 | 6 | 5 | 4 | 3 | 2 | 1 | Bit 0 |
|---|---|---|---|---|---|---|---|---|---|---|
| 0x001C | ATDDR6H | R | 0<br>0 | 0<br>0 | 0<br>0 | 0<br>0 | 0<br>0 | 0<br>0 | BIT 9 MSB<br>0 | BIT 8<br>0 |
| | | W | | | | | | | | |
| 0x001D | ATDDR6L | R | BIT 7<br>BIT 7 MSB | BIT 6<br>BIT 6 | BIT 5<br>BIT 5 | BIT 4<br>BIT 4 | BIT 3<br>BIT 3 | BIT 2<br>BIT 2 | BIT 1<br>BIT 1 | BIT 0<br>BIT 0 |
| | | W | | | | | | | | |
| 0x001E | ATDDR7H | R | 0<br>0 | 0<br>0 | 0<br>0 | 0<br>0 | 0<br>0 | 0<br>0 | BIT 9 MSB<br>0 | BIT 8<br>0 |
| | | W | | | | | | | | |
| 0x001F | ATDDR7L | R | BIT 7<br>BIT 7 MSB | BIT 6<br>BIT 6 | BIT 5<br>BIT 5 | BIT 4<br>BIT 4 | BIT 3<br>BIT 3 | BIT 2<br>BIT 2 | BIT 1<br>BIT 1 | BIT 0<br>BIT 0 |
| | | W | | | | | | | | |

= Unimplemented or Reserved

**Figure 8-2. ATD Register Summary (Sheet 4 of 4)**

**NOTE**

Register Address = Module Base Address + Address Offset, where the Module Base Address is defined at the MCU level and the Address Offset is defined at the module level.

## 8.3.2 Register Descriptions

This section describes in address order all the ATD10B8C registers and their individual bits.

### 8.3.2.1 Reserved Register (ATDCTL0)

Module Base + 0x0000

| | 7 | 6 | 5 | 4 | 3 | 2 | 1 | 0 |
|---|---|---|---|---|---|---|---|---|
| R | 0 | 0 | 0 | 0 | 0 | 0 | 0 | 0 |
| W | | | | | | | | |
| Reset | 0 | 0 | 0 | 0 | 0 | 0 | 0 | 0 |

= Unimplemented or Reserved

**Figure 8-3. Reserved Register (ATDCTL0)**

Read: Always read $00 in normal modes

Write: Unimplemented in normal modes

### 8.3.2.2 Reserved Register (ATDCTL1)

Module Base + 0x0001

| | 7 | 6 | 5 | 4 | 3 | 2 | 1 | 0 |
|---|---|---|---|---|---|---|---|---|
| R | 0 | 0 | 0 | 0 | 0 | 0 | 0 | 0 |
| W | | | | | | | | |
| Reset | 0 | 0 | 0 | 0 | 0 | 0 | 0 | 0 |

= Unimplemented or Reserved

**Figure 8-4. Reserved Register (ATDCTL1)**

Read: Always read $00 in normal modes

Write: Unimplemented in normal modes

**NOTE**

Writing to this registers when in special modes can alter functionality.

### 8.3.2.3 ATD Control Register 2 (ATDCTL2)

This register controls power down, interrupt, and external trigger. Writes to this register will abort current conversion sequence but will not start a new sequence.

Module Base + 0x0002

| | 7 | 6 | 5 | 4 | 3 | 2 | 1 | 0 |
|---|---|---|---|---|---|---|---|---|
| R<br>W | ADPU | AFFC | AWAI | ETRIGLE | ETRIGP | ETRIGE | ASCIE | ASCIF |
| Reset | 0 | 0 | 0 | 0 | 0 | 0 | 0 | 0 |

= Unimplemented or Reserved

**Figure 8-5. ATD Control Register 2 (ATDCTL2)**

Read: Anytime

Write: Anytime

**Table 8-1. ATDCTL2 Field Descriptions**

| Field | Description |
|---|---|
| 7<br>ADPU | **ATD Power Down** — This bit provides on/off control over the ATD10B8C block allowing reduced MCU power consumption. Because analog electronic is turned off when powered down, the ATD requires a recovery time period after ADPU bit is enabled.<br>0 Power down ATD<br>1 Normal ATD functionality |
| 6<br>AFFC | **ATD Fast Flag Clear All**<br>0 ATD flag clearing operates normally (read the status register ATDSTAT1 before reading the result register to clear the associate CCF flag).<br>1 Changes all ATD conversion complete flags to a fast clear sequence. Any access to a result register will cause the associate CCF flag to clear automatically. |
| 5<br>AWAI | **ATD Power Down in Wait Mode** — When entering Wait Mode this bit provides on/off control over the ATD10B8C block allowing reduced MCU power. Because analog electronic is turned off when powered down, the ATD requires a recovery time period after exit from Wait mode.<br>0 ATD continues to run in Wait mode<br>1 Halt conversion and power down ATD during Wait mode<br>After exiting Wait mode with an interrupt conversion will resume. But due to the recovery time the result of this conversion should be ignored. |
| 4<br>ETRIGLE | **External Trigger Level/Edge Control** — This bit controls the sensitivity of the external trigger signal. See Table 8-2 for details. |
| 3<br>ETRIGP | **External Trigger Polarity** — This bit controls the polarity of the external trigger signal. See Table 8-2 for details. |
| 2<br>ETRIGE | **External Trigger Mode Enable** — This bit enables the external trigger on ATD channel 7. The external trigger allows to synchronize sample and ATD conversions processes with external events.<br>0 Disable external trigger<br>1 Enable external trigger<br>**Note:** The conversion results for the external trigger ATD channel 7 have no meaning while external trigger mode is enabled. |

**Table 8-1. ATDCTL2 Field Descriptions (continued)**

| Field | Description |
|---|---|
| 1<br>ASCIE | **ATD Sequence Complete Interrupt Enable**<br>0 ATD Sequence Complete interrupt requests are disabled.<br>1 ATD Interrupt will be requested whenever ASCIF = 1 is set. |
| 0<br>ASCIF | **ATD Sequence Complete Interrupt Flag** — If ASCIE = 1 the ASCIF flag equals the SCF flag (see Section 8.3.2.7, "ATD Status Register 0 (ATDSTAT0)"), else ASCIF reads zero. Writes have no effect.<br>0 No ATD interrupt occurred<br>1 ATD sequence complete interrupt pending |

**Table 8-2. External Trigger Configurations**

| ETRIGLE | ETRIGP | External Trigger Sensitivity |
|---|---|---|
| 0 | 0 | Falling edge |
| 0 | 1 | Rising edge |
| 1 | 0 | Low level |
| 1 | 1 | High level |

### 8.3.2.4 ATD Control Register 3 (ATDCTL3)

This register controls the conversion sequence length, FIFO for results registers and behavior in Freeze Mode. Writes to this register will abort current conversion sequence but will not start a new sequence.

Module Base + 0x0003

| | 7 | 6 | 5 | 4 | 3 | 2 | 1 | 0 |
|---|---|---|---|---|---|---|---|---|
| R | 0 | S8C | S4C | S2C | S1C | FIFO | FRZ1 | FRZ0 |
| W | | | | | | | | |
| Reset | 0 | 0 | 1 | 0 | 0 | 0 | 0 | 0 |

= Unimplemented or Reserved

**Figure 8-6. ATD Control Register 3 (ATDCTL3)**

Read: Anytime

Write: Anytime

**Table 8-3. ATDCTL3 Field Descriptions**

| Field | Description |
|---|---|
| 6–3<br>S8C, S4C,<br>S2C, S1C | **Conversion Sequence Length** — These bits control the number of conversions per sequence. Table 8-4 shows all combinations. At reset, S4C is set to 1 (sequence length is 4). This is to maintain software continuity to HC12 Family. |

**Table 8-3. ATDCTL3 Field Descriptions (continued)**

| Field | Description |
|---|---|
| 2<br>FIFO | **Result Register FIFO Mode** — If this bit is zero (non-FIFO mode), the A/D conversion results map into the result registers based on the conversion sequence; the result of the first conversion appears in the first result register, the second result in the second result register, and so on.<br>If this bit is one (FIFO mode) the conversion counter is not reset at the beginning or ending of a conversion sequence; sequential conversion results are placed in consecutive result registers. In a continuously scanning conversion sequence, the result register counter will wrap around when it reaches the end of the result register file. The conversion counter value (CC2-0 in ATDSTAT0) can be used to determine where in the result register file, the current conversion result will be placed.<br>Aborting a conversion or starting a new conversion by write to an ATDCTL register (ATDCTL5-0) clears the conversion counter even if FIFO=1. So the first result of a new conversion sequence, started by writing to ATDCTL5, will always be place in the first result register (ATDDDR0). Intended usage of FIFO mode is continuos conversion (SCAN=1) or triggered conversion (ETRIG=1).<br>Which result registers hold valid data can be tracked using the conversion complete flags. Fast flag clear mode may or may not be useful in a particular application to track valid data.<br>0 Conversion results are placed in the corresponding result register up to the selected sequence length.<br>1 Conversion results are placed in consecutive result registers (wrap around at end). |
| 1–0<br>FRIZ[1:0] | **Background Debug Freeze Enable** — When debugging an application, it is useful in many cases to have the ATD pause when a breakpoint (Freeze Mode) is encountered. These 2 bits determine how the ATD will respond to a breakpoint as shown in Table 8-5. Leakage onto the storage node and comparator reference capacitors may compromise the accuracy of an immediately frozen conversion depending on the length of the freeze period. |

**Table 8-4. Conversion Sequence Length Coding**

| S8C | S4C | S2C | S1C | Number of Conversions per Sequence |
|---|---|---|---|---|
| 0 | 0 | 0 | 0 | 8 |
| 0 | 0 | 0 | 1 | 1 |
| 0 | 0 | 1 | 0 | 2 |
| 0 | 0 | 1 | 1 | 3 |
| 0 | 1 | 0 | 0 | 4 |
| 0 | 1 | 0 | 1 | 5 |
| 0 | 1 | 1 | 0 | 6 |
| 0 | 1 | 1 | 1 | 7 |
| 1 | X | X | X | 8 |

**Table 8-5. ATD Behavior in Freeze Mode (Breakpoint)**

| FRZ1 | FRZ0 | Behavior in Freeze Mode |
|---|---|---|
| 0 | 0 | Continue conversion |
| 0 | 1 | Reserved |
| 1 | 0 | Finish current conversion, then freeze |
| 1 | 1 | Freeze Immediately |

### 8.3.2.5 ATD Control Register 4 (ATDCTL4)

This register selects the conversion clock frequency, the length of the second phase of the sample time and the resolution of the A/D conversion (i.e.: 8-bits or 10-bits). Writes to this register will abort current conversion sequence but will not start a new sequence.

Module Base + 0x0004

| | 7 | 6 | 5 | 4 | 3 | 2 | 1 | 0 |
|---|---|---|---|---|---|---|---|---|
| R/W | SRES8 | SMP1 | SMP0 | PRS4 | PRS3 | PRS2 | PRS1 | PRS0 |
| Reset | 0 | 0 | 0 | 0 | 0 | 1 | 0 | 1 |

**Figure 8-7. ATD Control Register 4 (ATDCTL4)**

Read: Anytime

Write: Anytime

**Table 8-6. ATDCTL4 Field Descriptions**

| Field | Description |
|---|---|
| 7<br>SRES8 | **A/D Resolution Select** — This bit selects the resolution of A/D conversion results as either 8 or 10 bits. The A/D converter has an accuracy of 10 bits; however, if low resolution is required, the conversion can be speeded up by selecting 8-bit resolution.<br>0 10-bit resolution<br>1 8-bit resolution |
| 6–5<br>SMP[1:0] | **Sample Time Select** — These two bits select the length of the second phase of the sample time in units of ATD conversion clock cycles. Note that the ATD conversion clock period is itself a function of the prescaler value (bits PRS4-0). The sample time consists of two phases. The first phase is two ATD conversion clock cycles long and transfers the sample quickly (via the buffer amplifier) onto the A/D machine's storage node. The second phase attaches the external analog signal directly to the storage node for final charging and high accuracy. Table 8-7 lists the lengths available for the second sample phase. |
| 4–0<br>PRS[4:0} | **ATD Clock Prescaler** — These 5 bits are the binary value prescaler value PRS. The ATD conversion clock frequency is calculated as follows:<br>$\text{ATDclock} = \frac{[\text{BusClock}]}{[\text{PRS}+1]} \times 0.5$<br>**Note:** The maximum ATD conversion clock frequency is half the Bus Clock. The default (after reset) prescaler value is 5 which results in a default ATD conversion clock frequency that is Bus Clock divided by 12. Table 8-8 illustrates the divide-by operation and the appropriate range of the Bus Clock. |

**Table 8-7. Sample Time Select**

| SMP1 | SMP0 | Length of 2nd Phase of Sample Time |
|---|---|---|
| 0 | 0 | 2 A/D conversion clock periods |
| 0 | 1 | 4 A/D conversion clock periods |
| 1 | 0 | 8 A/D conversion clock periods |
| 1 | 1 | 16 A/D conversion clock periods |

**Table 8-8. Clock Prescaler Values**

| Prescale Value | Total Divisor Value | Maximum Bus Clock(1) | Minimum Bus Clock(2) |
|---|---|---|---|
| 00000 | Divide by 2 | 4 MHz | 1 MHz |
| 00001 | Divide by 4 | 8 MHz | 2 MHz |
| 00010 | Divide by 6 | 12 MHz | 3 MHz |
| 00011 | Divide by 8 | 16 MHz | 4 MHz |
| 00100 | Divide by 10 | 20 MHz | 5 MHz |
| 00101 | Divide by 12 | 24 MHz | 6 MHz |
| 00110 | Divide by 14 | 28 MHz | 7 MHz |
| 00111 | Divide by 16 | 32 MHz | 8 MHz |
| 01000 | Divide by 18 | 36 MHz | 9 MHz |
| 01001 | Divide by 20 | 40 MHz | 10 MHz |
| 01010 | Divide by 22 | 44 MHz | 11 MHz |
| 01011 | Divide by 24 | 48 MHz | 12 MHz |
| 01100 | Divide by 26 | 52 MHz | 13 MHz |
| 01101 | Divide by 28 | 56 MHz | 14 MHz |
| 01110 | Divide by 30 | 60 MHz | 15 MHz |
| 01111 | Divide by 32 | 64 MHz | 16 MHz |
| 10000 | Divide by 34 | 68 MHz | 17 MHz |
| 10001 | Divide by 36 | 72 MHz | 18 MHz |
| 10010 | Divide by 38 | 76 MHz | 19 MHz |
| 10011 | Divide by 40 | 80 MHz | 20 MHz |
| 10100 | Divide by 42 | 84 MHz | 21 MHz |
| 10101 | Divide by 44 | 88 MHz | 22 MHz |
| 10110 | Divide by 46 | 92 MHz | 23 MHz |
| 10111 | Divide by 48 | 96 MHz | 24 MHz |
| 11000 | Divide by 50 | 100 MHz | 25 MHz |
| 11001 | Divide by 52 | 104 MHz | 26 MHz |
| 11010 | Divide by 54 | 108 MHz | 27 MHz |
| 11011 | Divide by 56 | 112 MHz | 28 MHz |
| 11100 | Divide by 58 | 116 MHz | 29 MHz |
| 11101 | Divide by 60 | 120 MHz | 30 MHz |
| 11110 | Divide by 62 | 124 MHz | 31 MHz |
| 11111 | Divide by 64 | 128 MHz | 32 MHz |

1. Maximum ATD conversion clock frequency is 2 MHz. The maximum allowed bus clock frequency is shown in this column.
2. Minimum ATD conversion clock frequency is 500 kHz. The minimum allowed bus clock frequency is shown in this column.

### 8.3.2.6 ATD Control Register 5 (ATDCTL5)

This register selects the type of conversion sequence and the analog input channels sampled. Writes to this register will abort current conversion sequence and start a new conversion sequence.

Module Base + 0x0005

| | 7 | 6 | 5 | 4 | 3 | 2 | 1 | 0 |
|---|---|---|---|---|---|---|---|---|
| R | DJM | DSGN | SCAN | MULT | 0 | CC | CB | CA |
| W | | | | | | | | |
| Reset | 0 | 0 | 0 | 0 | 0 | 0 | 0 | 0 |

= Unimplemented or Reserved

**Figure 8-8. ATD Control Register 5 (ATDCTL5)**

Read: Anytime

Write: Anytime

**Table 8-9. ATDCTL5 Field Descriptions**

| Field | Description |
|---|---|
| 7<br>DJM | **Result Register Data Justification** — This bit controls justification of conversion data in the result registers. See Section 8.3.2.13, “ATD Conversion Result Registers (ATDDRHx/ATDDRLx)” for details.<br>0 Left justified data in the result registers<br>1 Right justified data in the result registers |
| 6<br>DSGN | Result Register Data Signed or Unsigned Representation — This bit selects between signed and unsigned conversion data representation in the result registers. Signed data is represented as 2’s complement. Signed data is not available in right justification. See Section 8.3.2.13, “ATD Conversion Result Registers (ATDDRHx/ATDDRLx)” for details.<br>0 Unsigned data representation in the result registers<br>1 Signed data representation in the result registers<br>Table 8-10 summarizes the result data formats available and how they are set up using the control bits.<br>Table 8-11 illustrates the difference between the signed and unsigned, left justified output codes for an input signal range between 0 and 5.12 Volts. |
| 5<br>SCAN | **Continuous Conversion Sequence Mode** — This bit selects whether conversion sequences are performed continuously or only once.<br>0 Single conversion sequence<br>1 Continuous conversion sequences (scan mode) |
| 4<br>MULT | **Multi-Channel Sample Mode** — When MULT is 0, the ATD sequence controller samples only from the specified analog input channel for an entire conversion sequence. The analog channel is selected by channel selection code (control bits CC/CB/CA located in ATDCTL5). When MULT is 1, the ATD sequence controller samples across channels. The number of channels sampled is determined by the sequence length value (S8C, S4C, S2C, S1C). The first analog channel examined is determined by channel selection code (CC, CB, CA control bits); subsequent channels sampled in the sequence are determined by incrementing the channel selection code.<br>0 Sample only one channel<br>1 Sample across several channels |
| 2–1<br>CC, CB, CA | **Analog Input Channel Select Code** — These bits select the analog input channel(s) whose signals are sampled and converted to digital codes. Table 8-12 lists the coding used to select the various analog input channels. In the case of single channel scans (MULT = 0), this selection code specified the channel examined. In the case of multi-channel scans (MULT = 1), this selection code represents the first channel to be examined in the conversion sequence. Subsequent channels are determined by incrementing channel selection code; selection codes that reach the maximum value wrap around to the minimum value. |

**Table 8-10. Available Result Data Formats**

| SRES8 | DJM | DSGN | Result Data Formats Description and Bus Bit Mapping |
|---|---|---|---|
| 1 | 0 | 0 | 8-bit / left justified / unsigned — bits 8–15 |
| 1 | 0 | 1 | 8-bit / left justified / signed — bits 8–15 |
| 1 | 1 | X | 8-bit / right justified / unsigned — bits 0–7 |
| 0 | 0 | 0 | 10-bit / left justified / unsigned — bits 6–15 |
| 0 | 0 | 1 | 10-bit / left justified / signed — bits 6–15 |
| 0 | 1 | X | 10-bit / right justified / unsigned — bits 0–9 |

**Table 8-11. Left Justified, Signed, and Unsigned ATD Output Codes.**

| Input Signal $V_{RL}$ = 0 Volts $V_{RH}$ = 5.12 Volts | Signed 8-Bit Codes | Unsigned 8-Bit Codes | Signed 10-Bit Codes | Unsigned 10-Bit Codes |
|---|---|---|---|---|
| 5.120 Volts | 7F | FF | 7FC0 | FFC0 |
| 5.100 | 7F | FF | 7F00 | FF00 |
| 5.080 | 7E | FE | 7E00 | FE00 |
| 2.580 | 01 | 81 | 0100 | 8100 |
| 2.560 | 00 | 80 | 0000 | 8000 |
| 2.540 | FF | 7F | FF00 | 7F00 |
| 0.020 | 81 | 01 | 8100 | 0100 |
| 0.000 | 80 | 00 | 8000 | 0000 |

**Table 8-12. Analog Input Channel Select Coding**

| CC | CB | CA | Analog Input Channel |
|---|---|---|---|
| 0 | 0 | 0 | AN0 |
| 0 | 0 | 1 | AN1 |
| 0 | 1 | 0 | AN2 |
| 0 | 1 | 1 | AN3 |
| 1 | 0 | 0 | AN4 |
| 1 | 0 | 1 | AN5 |
| 1 | 1 | 0 | AN6 |
| 1 | 1 | 1 | AN7 |

### 8.3.2.7 ATD Status Register 0 (ATDSTAT0)

This read-only register contains the sequence complete flag, overrun flags for external trigger and FIFO mode, and the conversion counter.

Module Base + 0x0006

| | 7 | 6 | 5 | 4 | 3 | 2 | 1 | 0 |
|---|---|---|---|---|---|---|---|---|
| R | SCF | 0 | ETORF | FIFOR | 0 | CC2 | CC1 | CC0 |
| W | | | | | | | | |
| Reset | 0 | 0 | 0 | 0 | 0 | 0 | 0 | 0 |

= Unimplemented or Reserved

**Figure 8-9. ATD Status Register 0 (ATDSTAT0)**

Read: Anytime

Write: Anytime (no effect on (CC2, CC1, CC0))

**Table 8-13. ATDSTAT0 Field Descriptions**

| Field | Description |
|---|---|
| 7<br>SCF | **Sequence Complete Flag** — This flag is set upon completion of a conversion sequence. If conversion sequences are continuously performed (SCAN = 1), the flag is set after each one is completed. This flag is cleared when one of the following occurs:<br>A) Write “1” to SCF<br>B) Write to ATDCTL5 (a new conversion sequence is started)<br>C) If AFFC=1 and read of a result register<br>0 Conversion sequence not completed<br>1 Conversion sequence has completed |
| 5<br>ETORF | **External Trigger Overrun Flag** — While in edge trigger mode (ETRIGLE = 0), if additional active edges are detected while a conversion sequence is in process the overrun flag is set. This flag is cleared when one of the following occurs:<br>A) Write “1” to ETORF<br>B) Write to ATDCTL2, ATDCTL3 or ATDCTL4 (a conversion sequence is aborted)<br>C) Write to ATDCTL5 (a new conversion sequence is started)<br>0 No External trigger over run error has occurred<br>1 External trigger over run error has occurred |

**Table 8-13. ATDSTAT0 Field Descriptions (continued)**

| Field | Description |
|---|---|
| 4<br>FIFOR | **FIFO Over Run Flag** — This bit indicates that a result register has been written to before its associated conversion complete flag (CCF) has been cleared. This flag is most useful when using the FIFO mode because the flag potentially indicates that result registers are out of sync with the input channels. However, it is also practical for non-FIFO modes, and indicates that a result register has been over written before it has been read (i.e. the old data has been lost). This flag is cleared when one of the following occurs:<br>A) Write “1” to FIFOR<br>B) Start a new conversion sequence (write to ATDCTL5 or external trigger)<br>0 No over run has occurred<br>1 An over run condition exists |
| 2–0<br>CC[2:0] | **Conversion Counter** — These 3 read-only bits are the binary value of the conversion counter. The conversion counter points to the result register that will receive the result of the current conversion. For example, CC2 = 1, CC1 = 1, CC0 = 0 indicates that the result of the current conversion will be in ATD Result Register 6. If in non-FIFO mode (FIFO = 0) the conversion counter is initialized to zero at the begin and end of the conversion sequence. If in FIFO mode (FIFO = 1) the register counter is not initialized. The conversion counters wraps around when its maximum value is reached.<br>Aborting a conversion or starting a new conversion by write to an ATDCTL register (ATDCTL5-2) clears the conversion counter even if FIFO=1. |

### 8.3.2.8 Reserved Register (ATDTEST0)

Module Base + 0x0008

| | 7 | 6 | 5 | 4 | 3 | 2 | 1 | 0 |
|---|---|---|---|---|---|---|---|---|
| R | U | U | U | U | U | U | U | U |
| W | | | | | | | | |
| Reset | 1 | 0 | 0 | 0 | 0 | 0 | 0 | 0 |

= Unimplemented or Reserved

**Figure 8-10. Reserved Register (ATDTEST0)**

Read: Anytime, returns unpredictable values

Write: Anytime in special modes, unimplemented in normal modes

**NOTE**

Writing to this registers when in special modes can alter functionality.

### 8.3.2.9 ATD Test Register 1 (ATDTEST1)

This register contains the SC bit used to enable special channel conversions.

Module Base + 0x0009

| | 7 | 6 | 5 | 4 | 3 | 2 | 1 | 0 |
|---|---|---|---|---|---|---|---|---|
| R | U | U | U | U | U | U | U | SC |
| W | | | | | | | | |
| Reset | 0 | 0 | 0 | 0 | 0 | 0 | 0 | 0 |

= Unimplemented or Reserved

**Figure 8-11. ATD Test Register 1 (ATDTEST1)**

Read: Anytime, returns unpredictable values for Bit 7 and Bit 6

Write: Anytime

**Table 8-14. ATDTEST1 Field Descriptions**

| Field | Description |
|---|---|
| 0<br>SC | **Special Channel Conversion Bit** — If this bit is set, then special channel conversion can be selected using CC, CB, and CA of ATDCTL5. Table 8-15 lists the coding.<br>0 Special channel conversions disabled<br>1 Special channel conversions enabled<br>**Note:** Always write remaining bits of ATDTEST1 (Bit7 to Bit1) zero when writing SC bit. Not doing so might result in unpredictable ATD behavior. |

**Table 8-15. Special Channel Select Coding**

| SC | CC | CB | CA | Analog Input Channel |
|---|---|---|---|---|
| 1 | 0 | X | X | Reserved |
| 1 | 1 | 0 | 0 | $V_{RH}$ |
| 1 | 1 | 0 | 1 | $V_{RL}$ |
| 1 | 1 | 1 | 0 | $(V_{RH}+V_{RL}) / 2$ |
| 1 | 1 | 1 | 1 | Reserved |

### 8.3.2.10 ATD Status Register 1 (ATDSTAT1)

This read-only register contains the Conversion Complete Flags.

Module Base + 0x000B

| | 7 | 6 | 5 | 4 | 3 | 2 | 1 | 0 |
|---|---|---|---|---|---|---|---|---|
| R | CCF7 | CCF6 | CCF5 | CCF4 | CCF3 | CCF2 | CCF1 | CCF0 |
| W | | | | | | | | |
| Reset | 0 | 0 | 0 | 0 | 0 | 0 | 0 | 0 |

= Unimplemented or Reserved

**Figure 8-12. ATD Status Register 1 (ATDSTAT1)**

Read: Anytime

Write: Anytime, no effect

**Table 8-16. ATDSTAT1 Field Descriptions**

| Field | Description |
|---|---|
| 7–0<br>CCF[7:0] | **Conversion Complete Flag x (x = 7, 6, 5, 4, 3, 2, 1, 0)** — A conversion complete flag is set at the end of each conversion in a conversion sequence. The flags are associated with the conversion position in a sequence (and also the result register number). Therefore, CCF0 is set when the first conversion in a sequence is complete and the result is available in result register ATDDR0; CCF1 is set when the second conversion in a sequence is complete and the result is available in ATDDR1, and so forth. A flag CCFx (x = 7, 6, 5, 4, 3, 2, 1, 0) is cleared when one of the following occurs:<br>A) Write to ATDCTL5 (a new conversion sequence is started)<br>B) If AFFC = 0 and read of ATDSTAT1 followed by read of result register ATDDRx<br>C) If AFFC = 1 and read of result register ATDDRx<br>0 Conversion number x not completed<br>1 Conversion number x has completed, result ready in ATDDRx |

### 8.3.2.11 ATD Input Enable Register (ATDDIEN)

Module Base + 0x000D

| | 7 | 6 | 5 | 4 | 3 | 2 | 1 | 0 |
|---|---|---|---|---|---|---|---|---|
| R<br>W | IEN7 | IEN6 | IEN5 | IEN4 | IEN3 | IEN2 | IEN1 | IEN0 |
| Reset | 0 | 0 | 0 | 0 | 0 | 0 | 0 | 0 |

**Figure 8-13. ATD Input Enable Register (ATDDIEN)**

Read: Anytime

Write: Anytime

**Table 8-17. ATDDIEN Field Descriptions**

| Field | Description |
|---|---|
| 7–0<br>IEN[7:0] | **ATD Digital Input Enable on channel x (x = 7, 6, 5, 4, 3, 2, 1, 0)** — This bit controls the digital input buffer from the analog input pin (ANx) to PTADx data register.<br>0 Disable digital input buffer to PTADx<br>1 Enable digital input buffer to PTADx.<br>**Note:** Setting this bit will enable the corresponding digital input buffer continuously. If this bit is set while simultaneously using it as an analog port, there is potentially increased power consumption because the digital input buffer maybe in the linear region. |

### 8.3.2.12 Port Data Register (PORTAD)

The data port associated with the ATD is general purpose I/O. The port pins are shared with the analog A/D inputs AN7–AN0.

Module Base + 0x000F

| | 7 | 6 | 5 | 4 | 3 | 2 | 1 | 0 |
|---|---|---|---|---|---|---|---|---|
| R | PTAD7 | PTAD6 | PTAD5 | PTAD4 | PTAD3 | PTAD2 | PTAD1 | PTAD0 |
| W | | | | | | | | |
| Reset | 1 | 1 | 1 | 1 | 1 | 1 | 1 | 1 |
| Pin Function | AN7 | AN6 | AN5 | AN4 | AN3‘ | AN2 | AN1 | AN0 |

= Unimplemented or Reserved

**Figure 8-14. Port Data Register (PORTAD)**

Read: Anytime

Write: Anytime, no effect

The A/D input channels may be used for general-purpose digital I/0.

**Table 8-18. PORTAD Field Descriptions**

| Field | Description |
|---|---|
| 7<br>PTAD[7:0] | **A/D Channel x (ANx) Digital Input (x = 7, 6, 5, 4, 3, 2, 1, 0)** — If the digital input buffer on the ANx pin is enabled (IENx = 1) read returns the logic level on ANx pin (signal potentials not meeting $V_{IL}$ or $V_{IH}$ specifications will have an indeterminate value)).<br>If the digital input buffers are disabled (IENx = 0), read returns a “1”.<br>Reset sets all PORTAD bits to “1”. |

### 8.3.2.13 ATD Conversion Result Registers (ATDDRHx/ATDDRLx)

The A/D conversion results are stored in 8 read-only result registers ATDDRHx/ATDDRLx. The result data is formatted in the result registers based on two criteria. First there is left and right justification; this selection is made using the DJM control bit in ATDCTL5. Second there is signed and unsigned data; this selection is made using the DSGN control bit in ATDCTL5. Signed data is stored in 2’s complement format and only exists in left justified format. Signed data selected for right justified format is ignored.

Read: Anytime

Write: Anytime, no effect in normal modes

#### 8.3.2.13.1 Left Justified Result Data

Module Base + 0x0010 = ATDDR0H, 0x0012 = ATDDR1H, 0x0014 = ATDDR2H, 0x0016 = ATDDR3H
0x0018 = ATDDR4H, 0x001A = ATDDR5H, 0x001C = ATDDR6H, 0x001E = ATDDR7H

| | 7 | 6 | 5 | 4 | 3 | 2 | 1 | 0 | |
|---|---|---|---|---|---|---|---|---|---|
| R<br>W | BIT 9 MSB<br>BIT 7 MSB | BIT 8<br>BIT 6 | BIT 7<br>BIT 5 | BIT 6<br>BIT 4 | BIT 5<br>BIT 3 | BIT 4<br>BIT 2 | BIT 3<br>BIT 1 | BIT 2<br>BIT 0 | 10-bit data<br>8-bit data |
| Reset | 0 | 0 | 0 | 0 | 0 | 0 | 0 | 0 | |

**Figure 8-15. Left Justified, ATD Conversion Result Register, High Byte (ATDDRxH)**

Module Base + 0x0011 = ATDDR0L, 0x0013 = ATDDR1L, 0x0015 = ATDDR2L, 0x0017 = ATDDR3L
0x0019 = ATDDR4L, 0x001B = ATDDR5L, 0x001D = ATDDR6L, 0x001F = ATDDR7L

| | 7 | 6 | 5 | 4 | 3 | 2 | 1 | 0 | |
|---|---|---|---|---|---|---|---|---|---|
| R<br>W | BIT 1<br>U | BIT 0<br>U | 0<br>0 | 0<br>0 | 0<br>0 | 0<br>0 | 0<br>0 | 0<br>0 | 10-bit data<br>8-bit data |
| Reset | 0 | 0 | 0 | 0 | 0 | 0 | 0 | 0 | |

**Figure 8-16. Left Justified, ATD Conversion Result Register, Low Byte (ATDDRxL)**

#### 8.3.2.13.2 Right Justified Result Data

Module Base + 0x0010 = ATDDR0H, 0x0012 = ATDDR1H, 0x0014 = ATDDR2H, 0x0016 = ATDDR3H
0x0018 = ATDDR4H, 0x001A = ATDDR5H, 0x001C = ATDDR6H, 0x001E = ATDDR7H

| | 7 | 6 | 5 | 4 | 3 | 2 | 1 | 0 | |
|---|---|---|---|---|---|---|---|---|---|
| R<br>W | 0<br>0 | 0<br>0 | 0<br>0 | 0<br>0 | 0<br>0 | 0<br>0 | BIT 9 MSB<br>0 | BIT 8<br>0 | 10-bit data<br>8-bit data |
| Reset | 0 | 0 | 0 | 0 | 0 | 0 | 0 | 0 | |

**Figure 8-17. Right Justified, ATD Conversion Result Register, High Byte (ATDDRxH)**

Module Base + 0x0011 = ATDDR0L, 0x0013 = ATDDR1L, 0x0015 = ATDDR2L, 0x0017 = ATDDR3L
0x0019 = ATDDR4L, 0x001B = ATDDR5L, 0x001D = ATDDR6L, 0x001F = ATDDR7L

| | 7 | 6 | 5 | 4 | 3 | 2 | 1 | 0 | |
|---|---|---|---|---|---|---|---|---|---|
| R<br>W | BIT 7<br>BIT 7 MSB | BIT 6<br>BIT 6 | BIT 5<br>BIT 5 | BIT 4<br>BIT 4 | BIT 3<br>BIT 3 | BIT 2<br>BIT 2 | BIT 1<br>BIT 1 | BIT 0<br>BIT 0 | 10-bit data<br>8-bit data |
| Reset | 0 | 0 | 0 | 0 | 0 | 0 | 0 | 0 | |

**Figure 8-18. Right Justified, ATD Conversion Result Register, Low Byte (ATDDRxL)**

## 8.4 Functional Description

The ATD10B8C is structured in an analog and a digital sub-block.

### 8.4.1 Analog Sub-block

The analog sub-block contains all analog electronics required to perform a single conversion. Separate power supplies $V_{DDA}$ and $V_{SSA}$ allow to isolate noise of other MCU circuitry from the analog sub-block.

#### 8.4.1.1 Sample and Hold Machine

The sample and hold (S/H) machine accepts analog signals from the external surroundings and stores them as capacitor charge on a storage node.

The sample process uses a two stage approach. During the first stage, the sample amplifier is used to quickly charge the storage node.The second stage connects the input directly to the storage node to complete the sample for high accuracy.

When not sampling, the sample and hold machine disables its own clocks. The analog electronics still draw their quiescent current. The power down (ADPU) bit must be set to disable both the digital clocks and the analog power consumption.

The input analog signals are unipolar and must fall within the potential range of $V_{SSA}$ to $V_{DDA}$.

#### 8.4.1.2 Analog Input Multiplexer

The analog input multiplexer connects one of the 8 external analog input channels to the sample and hold machine.

#### 8.4.1.3 Sample Buffer Amplifier

The sample amplifier is used to buffer the input analog signal so that the storage node can be quickly charged to the sample potential.

#### 8.4.1.4 Analog-to-Digital (A/D) Machine

The A/D machine performs analog-to-digital conversions. The resolution is program selectable at either 8 or 10 bits. The A/D machine uses a successive approximation architecture. It functions by comparing the stored analog sample potential with a series of digitally generated analog potentials. By following a binary search algorithm, the A/D machine locates the approximating potential that is nearest to the sampled potential.

When not converting the A/D machine disables its own clocks. The analog electronics still draws quiescent current. The power down (ADPU) bit must be set to disable both the digital clocks and the analog power consumption.

Only analog input signals within the potential range of $V_{RL}$ to $V_{RH}$ (A/D reference potentials) will result in a non-railed digital output codes.

### 8.4.2 Digital Sub-block

This subsection explains some of the digital features in more detail. See 7 for all details.

#### 8.4.2.1 External Trigger Input (ETRIG)

The external trigger feature allows the user to synchronize ATD conversions to the external environment events rather than relying on software to signal the ATD module when ATD conversions are to take place. The input signal (ATD channel 7) is programmable to be edge or level sensitive with polarity control. Table 8-19 gives a brief description of the different combinations of control bits and their affect on the external trigger function

**Table 8-19. External Trigger Control Bits**

| ETRIGLE | ETRIGP | ETRIGE | SCAN | Description |
|---|---|---|---|---|
| X | X | 0 | 0 | Ignores external trigger. Performs one conversion sequence and stops. |
| X | X | 0 | 1 | Ignores external trigger. Performs continuous conversion sequences. |
| 0 | 0 | 1 | X | Falling edge triggered. Performs one conversion sequence per trigger. |
| 0 | 1 | 1 | X | Rising edge triggered. Performs one conversion sequence per trigger. |
| 1 | 0 | 1 | X | Trigger active low. Performs continuous conversions while trigger is active. |
| 1 | 1 | 1 | X | Trigger active high. Performs continuous conversions while trigger is active. |

During a conversion, if additional active edges are detected the overrun error flag ETORF is set.

In either level or edge triggered modes, the first conversion begins when the trigger is received. In both cases, the maximum latency time is one Bus Clock cycle plus any skew or delay introduced by the trigger circuitry.

**NOTE**

The conversion results for the external trigger ATD channel 7 have no meaning while external trigger mode is enabled.

Once ETRIGE is enabled, conversions cannot be started by a write to ATDCTL5, but rather must be triggered externally.

If the level mode is active and the external trigger both de-asserts and re-asserts itself during a conversion sequence, this does not constitute an overrun; therefore, the flag is not set. If the trigger is left asserted in level mode while a sequence is completing, another sequence will be triggered immediately.

#### 8.4.2.2 General-Purpose Digital Port Operation

The channel pins can be multiplexed between analog and digital data. As analog inputs, they are multiplexed and sampled to supply signals to the A/D converter. Alternatively they can be configured as digital I/O signals with the port I/O data being held in PORTAD.

The analog/digital multiplex operation is performed in the pads. The pad is always connected to the analog inputs of the ATD10B8C. The pad signal is buffered to the digital port registers. This buffer can be turned on or off with the ATDDIEN register. This is important so that the buffer does not draw excess current when analog potentials are presented at its input.

#### 8.4.2.3 Low-Power Modes

The ATD10B8C can be configured for lower MCU power consumption in three different ways:

1. Stop Mode: This halts A/D conversion. Exit from Stop mode will resume A/D conversion, But due to the recovery time the result of this conversion should be ignored.
2. Wait Mode with AWAI = 1: This halts A/D conversion. Exit from Wait mode will resume A/D conversion, but due to the recovery time the result of this conversion should be ignored.
3. Writing ADPU = 0 (Note that all ATD registers remain accessible.): This aborts any A/D conversion in progress.

**NOTE**

The reset value for the ADPU bit is zero. Therefore, when this module is reset, it is reset into the power down state.

## 8.5 Initialization/Application Information

### 8.5.1 Setting up and starting an A/D conversion

The following describes a typical setup procedure for starting A/D conversions. It is highly recommended to follow this procedure to avoid common mistakes.

Each step of the procedure will have a general remark and a typical example

#### 8.5.1.1 Step 1

Power up the ATD and concurrently define other settings in ATDCTL2
Example: Write to ATDCTL2: ADPU=1 -> powers up the ATD, ASCIE=1 enable interrupt on finish of a conversion sequence.

#### 8.5.1.2 Step 2

Wait for the ATD Recovery Time $t_{REC}$ before you proceed with Step 3.

Example: Use the CPU in a branch loop to wait for a defined number of bus clocks.

#### 8.5.1.3 Step 3

Configure how many conversions you want to perform in one sequence and define other settings in ATDCTL3.

Example: Write S4C=1 to do 4 conversions per sequence.

#### 8.5.1.4 Step 4

Configure resolution, sampling time and ATD clock speed in ATDCTL4.

Example: Use default for resolution and sampling time by leaving SRES8, SMP1 and SMP0 clear. For a bus clock of 40MHz write 9 to PR4-0, this gives an ATD clock of 0.5*40MHz/(9+1) = 2MHz which is within the allowed range for $f_{ATDCLK}$.

#### 8.5.1.5 Step 5

Configure starting channel, single/multiple channel, continuous or single sequence and result data format in ATDCTL5. Writing ATDCTL5 will start the conversion, so make sure your write ATDCTL5 in the last step.

Example: Leave CC,CB,CA clear to start on channel AN0. Write MULT=1 to convert channel AN0 to AN3 in a sequence (4 conversion per sequence selected in ATDCTL3).

### 8.5.2 Aborting an A/D conversion

#### 8.5.2.1 Step 1

Disable the ATD Interrupt by writing ASCIE=0 in ATDCTL2. This will also abort any ongoing conversion sequence.

It is important to clear the interrupt enable at this point, prior to step 3, as depending on the device clock gating it may not always be possible to clear it or the SCF flag once the module is disabled (ADPU=0).

#### 8.5.2.2 Step 2

Clear the SCF flag by writing a 1 in ATDSTAT0.

(Remaining flags will be cleared with the next start of a conversions, but SCF flag should be cleared to avoid SCF interrupt.)

#### 8.5.2.3 Step 3

Power down ATD by writing ADPU=0 in ATDCTL2.

## 8.6 Resets

At reset the ATD10B8C is in a power down state. The reset state of each individual bit is listed within Section 8.3.2, “Register Descriptions” which details the registers and their bit-field.

## 8.7 Interrupts

The interrupt requested by the ATD10B8C is listed in Table 8-20. Refer to MCU specification for related vector address and priority.

**Table 8-20. ATD10B8C Interrupt Vectors**

| Interrupt Source | CCR Mask | Local Enable |
|---|---|---|
| Sequence complete interrupt | I bit | ASCIE in ATDCTL2 |

See Section 8.3.2, “Register Descriptions” for further details.

# Chapter 9
# Clocks and Reset Generator (CRGV4) Block Description

## 9.1 Introduction

This specification describes the function of the clocks and reset generator (CRGV4).

### 9.1.1 Features

The main features of this block are:

- Phase-locked loop (PLL) frequency multiplier
  - Reference divider
  - Automatic bandwidth control mode for low-jitter operation
  - Automatic frequency lock detector
  - CPU interrupt on entry or exit from locked condition
  - Self-clock mode in absence of reference clock
- System clock generator
  - Clock quality check
  - Clock switch for either oscillator- or PLL-based system clocks
  - User selectable disabling of clocks during wait mode for reduced power consumption
- Computer operating properly (COP) watchdog timer with time-out clear window
- System reset generation from the following possible sources:
  - Power-on reset
  - Low voltage reset
    Refer to the device overview section for availability of this feature.
  - COP reset
  - Loss of clock reset
  - External pin reset
- Real-time interrupt (RTI)

### 9.1.2 Modes of Operation

This subsection lists and briefly describes all operating modes supported by the CRG.

- Run mode

  All functional parts of the CRG are running during normal run mode. If RTI or COP functionality is required the individual bits of the associated rate select registers (COPCTL, RTICTL) have to be set to a nonzero value.

- Wait mode

  This mode allows to disable the system and core clocks depending on the configuration of the individual bits in the CLKSEL register.

- Stop mode

  Depending on the setting of the PSTP bit, stop mode can be differentiated between full stop mode (PSTP = 0) and pseudo-stop mode (PSTP = 1).

  — Full stop mode

    The oscillator is disabled and thus all system and core clocks are stopped. The COP and the RTI remain frozen.

  — Pseudo-stop mode

    The oscillator continues to run and most of the system and core clocks are stopped. If the respective enable bits are set the COP and RTI will continue to run, else they remain frozen.

- Self-clock mode

  Self-clock mode will be entered if the clock monitor enable bit (CME) and the self-clock mode enable bit (SCME) are both asserted and the clock monitor in the oscillator block detects a loss of clock. As soon as self-clock mode is entered the CRGV4 starts to perform a clock quality check. Self-clock mode remains active until the clock quality check indicates that the required quality of the incoming clock signal is met (frequency and amplitude). Self-clock mode should be used for safety purposes only. It provides reduced functionality to the MCU in case a loss of clock is causing severe system conditions.

### 9.1.3 Block Diagram

Figure 9-1 shows a block diagram of the CRGV4.

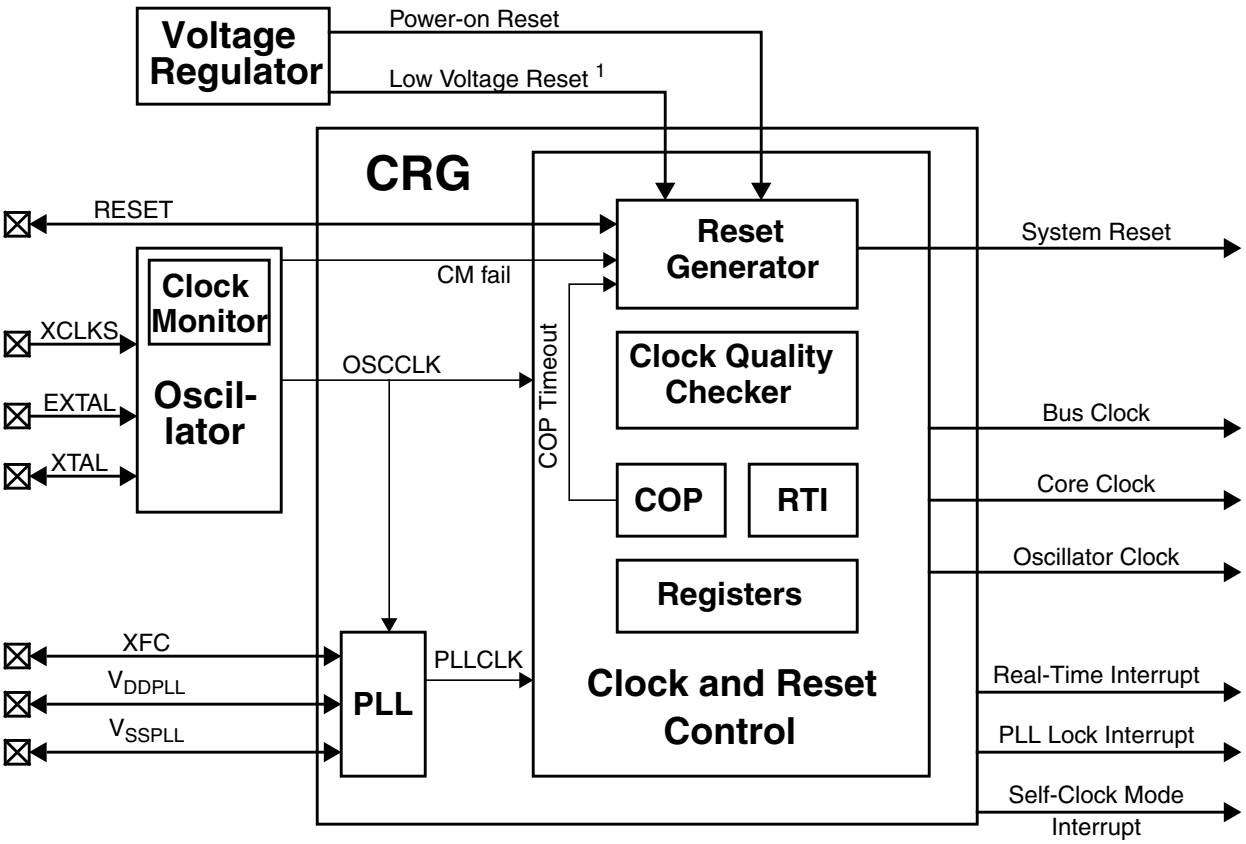


[1] Refer to the device overview section for availability of the low-voltage reset feature.

**Figure 9-1. CRG Block Diagram**

## 9.2 External Signal Description

This section lists and describes the signals that connect off chip.

### 9.2.1 $V_{DDPLL}$, $V_{SSPLL}$ — PLL Operating Voltage, PLL Ground

These pins provides operating voltage ($V_{DDPLL}$) and ground ($V_{SSPLL}$) for the PLL circuitry. This allows the supply voltage to the PLL to be independently bypassed. Even if PLL usage is not required $V_{DDPLL}$ and $V_{SSPLL}$ must be connected properly.

### 9.2.2 XFC — PLL Loop Filter Pin

A passive external loop filter must be placed on the XFC pin. The filter is a second-order, low-pass filter to eliminate the VCO input ripple. The value of the external filter network and the reference frequency determines the speed of the corrections and the stability of the PLL. Refer to the device overview chapter for calculation of PLL loop filter (XFC) components. If PLL usage is not required the XFC pin must be tied to $V_{DDPLL}$.

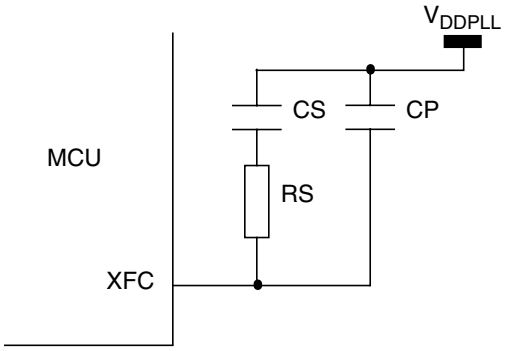


**Figure 9-2. PLL Loop Filter Connections**

### 9.2.3 $\overline{\text{RESET}}$ — Reset Pin

$\overline{\text{RESET}}$ is an active low bidirectional reset pin. As an input it initializes the MCU asynchronously to a known start-up state. As an open-drain output it indicates that an system reset (internal to MCU) has been triggered.

## 9.3 Memory Map and Register Definition

This section provides a detailed description of all registers accessible in the CRGV4.

### 9.3.1 Module Memory Map

Table 9-1 gives an overview on all CRGV4 registers.

**Table 9-1. CRGV4 Memory Map**

| Address Offset | Use | Access |
|---|---|---|
| 0x0000 | CRG Synthesizer Register (SYNR) | R/W |
| 0x0001 | CRG Reference Divider Register (REFDV) | R/W |
| 0x0002 | CRG Test Flags Register (CTFLG)(1) | R/W |
| 0x0003 | CRG Flags Register (CRGFLG) | R/W |
| 0x0004 | CRG Interrupt Enable Register (CRGINT) | R/W |
| 0x0005 | CRG Clock Select Register (CLKSEL) | R/W |
| 0x0006 | CRG PLL Control Register (PLLCTL) | R/W |
| 0x0007 | CRG RTI Control Register (RTICTL) | R/W |
| 0x0008 | CRG COP Control Register (COPCTL) | R/W |
| 0x0009 | CRG Force and Bypass Test Register (FORBYP)(2) | R/W |
| 0x000A | CRG Test Control Register (CTCTL)(3) | R/W |
| 0x000B | CRG COP Arm/Timer Reset (ARMCOP) | R/W |

1. CTFLG is intended for factory test purposes only.
2. FORBYP is intended for factory test purposes only.
3. CTCTL is intended for factory test purposes only.

**NOTE**

Register address = base address + address offset, where the base address is defined at the MCU level and the address offset is defined at the module level.

## 9.3.2 Register Descriptions

This section describes in address order all the CRGV4 registers and their individual bits.

| Register Name | | Bit 7 | 6 | 5 | 4 | 3 | 2 | 1 | Bit 0 |
|---|---|---|---|---|---|---|---|---|---|
| 0x0000 SYNR | R | 0 | 0 | SYN5 | SYN4 | SYN3 | SYN2 | SYN1 | SYN0 |
| | W | | | | | | | | |
| 0x0001 REFDV | R | 0 | 0 | 0 | 0 | REFDV3 | REFDV2 | REFDV1 | REFDV0 |
| | W | | | | | | | | |
| 0x0002 CTFLG | R | 0 | 0 | 0 | 0 | 0 | 0 | 0 | 0 |
| | W | | | | | | | | |
| 0x0003 CRGFLG | R | RTIF | PORF | LVRF | LOCKIF | LOCK | TRACK | SCMIF | SCM |
| | W | | | | | | | | |
| 0x0004 CRGINT | R | RTIE | 0 | 0 | LOCKIE | 0 | 0 | SCMIE | 0 |
| | W | | | | | | | | |
| 0x0005 CLKSEL | R | PLLSEL | PSTP | SYSWAI | ROAWAI | PLLWAI | CWAI | RTIWAI | COPWAI |
| | W | | | | | | | | |
| 0x0006 PLLCTL | R | CME | PLLON | AUTO | ACQ | 0 | PRE | PCE | SCME |
| | W | | | | | | | | |
| 0x0007 RTICTL | R | 0 | RTR6 | RTR5 | RTR4 | RTR3 | RTR2 | RTR1 | RTR0 |
| | W | | | | | | | | |
| 0x0008 COPCTL | R | WCOP | RSBCK | 0 | 0 | 0 | CR2 | CR1 | CR0 |
| | W | | | | | | | | |
| 0x0009 FORBYP | R | 0 | 0 | 0 | 0 | 0 | 0 | 0 | 0 |
| | W | | | | | | | | |
| 0x000A CTCTL | R | 0 | 0 | 0 | 0 | 0 | 0 | 0 | 0 |
| | W | | | | | | | | |

= Unimplemented or Reserved

**Figure 9-3. CRG Register Summary**

| Register Name | | Bit 7 | 6 | 5 | 4 | 3 | 2 | 1 | Bit 0 |
|---|---|---|---|---|---|---|---|---|---|
| 0x000B ARMCOP | R | 0 | 0 | 0 | 0 | 0 | 0 | 0 | 0 |
| | W | Bit 7 | Bit 6 | Bit 5 | Bit 4 | Bit 3 | Bit 2 | Bit 1 | Bit 0 |

= Unimplemented or Reserved

**Figure 9-3. CRG Register Summary (continued)**

### 9.3.2.1 CRG Synthesizer Register (SYNR)

The SYNR register controls the multiplication factor of the PLL. If the PLL is on, the count in the loop divider (SYNR) register effectively multiplies up the PLL clock (PLLCLK) from the reference frequency by 2 x (SYNR+1). PLLCLK will not be below the minimum VCO frequency ($f_{SCM}$).

$$\text{PLLCLK} = 2\text{xOSCCLKx}\frac{(\text{SYNR}+1)}{(\text{REFDV}+1)}$$

**NOTE**

If PLL is selected (PLLSEL=1), Bus Clock = PLLCLK / 2
Bus Clock must not exceed the maximum operating system frequency.

Module Base + 0x0000

| | 7 | 6 | 5 | 4 | 3 | 2 | 1 | 0 |
|---|---|---|---|---|---|---|---|---|
| R | 0 | 0 | SYN5 | SYNR | SYN3 | SYN2 | SYN1 | SYN0 |
| W | | | | | | | | |
| Reset | 0 | 0 | 0 | 0 | 0 | 0 | 0 | 0 |

= Unimplemented or Reserved

**Figure 9-4. CRG Synthesizer Register (SYNR)**

Read: anytime

Write: anytime except if PLLSEL = 1

**NOTE**

Write to this register initializes the lock detector bit and the track detector bit.

### 9.3.2.2 CRG Reference Divider Register (REFDV)

The REFDV register provides a finer granularity for the PLL multiplier steps. The count in the reference divider divides OSCCLK frequency by REFDV + 1.

Module Base + 0x0001

| | 7 | 6 | 5 | 4 | 3 | 2 | 1 | 0 |
|---|---|---|---|---|---|---|---|---|
| R | 0 | 0 | 0 | 0 | REFDV3 | REFDV2 | REFDV1 | REFDV0 |
| W | | | | | | | | |
| Reset | 0 | 0 | 0 | 0 | 0 | 0 | 0 | 0 |

= Unimplemented or Reserved

**Figure 9-5. CRG Reference Divider Register (REFDV)**

Read: anytime

Write: anytime except when PLLSEL = 1

**NOTE**

Write to this register initializes the lock detector bit and the track detector bit.

### 9.3.2.3 Reserved Register (CTFLG)

This register is reserved for factory testing of the CRGV4 module and is not available in normal modes.

Module Base + 0x0002

| | 7 | 6 | 5 | 4 | 3 | 2 | 1 | 0 |
|---|---|---|---|---|---|---|---|---|
| R | 0 | 0 | 0 | 0 | 0 | 0 | 0 | 0 |
| W | | | | | | | | |
| Reset | 0 | 0 | 0 | 0 | 0 | 0 | 0 | 0 |

= Unimplemented or Reserved

**Figure 9-6. CRG Reserved Register (CTFLG)**

Read: always reads 0x0000 in normal modes

Write: unimplemented in normal modes

**NOTE**

Writing to this register when in special mode can alter the CRGV4 functionality.

### 9.3.2.4 CRG Flags Register (CRGFLG)

This register provides CRG status bits and flags.

Module Base + 0x0003

| | 7 | 6 | 5 | 4 | 3 | 2 | 1 | 0 |
|---|---|---|---|---|---|---|---|---|
| R | RTIF | PORF | LVRF | LOCKIF | LOCK | TRACK | SCMIF | SCM |
| W | | | | | | | | |
| Reset | 0 | Note 1 | Note 2 | 0 | 0 | 0 | 0 | 0 |

1. PORF is set to 1 when a power-on reset occurs. Unaffected by system reset.
2. LVRF is set to 1 when a low-voltage reset occurs. Unaffected by system reset.

= Unimplemented or Reserved

**Figure 9-7. CRG Flag Register (CRGFLG)**

Read: anytime

Write: refer to each bit for individual write conditions

**Table 9-2. CRGFLG Field Descriptions**

| Field | Description |
|---|---|
| 7<br>RTIF | **Real-Time Interrupt Flag** — RTIF is set to 1 at the end of the RTI period. This flag can only be cleared by writing a 1. Writing a 0 has no effect. If enabled (RTIE = 1), RTIF causes an interrupt request.<br>0 RTI time-out has not yet occurred.<br>1 RTI time-out has occurred. |
| 6<br>PORF | **Power-on Reset Flag** — PORF is set to 1 when a power-on reset occurs. This flag can only be cleared by writing a 1. Writing a 0 has no effect.<br>0 Power-on reset has not occurred.<br>1 Power-on reset has occurred. |
| 5<br>LVRF | **Low-Voltage Reset Flag** — If low voltage reset feature is not available (see the device overview chapter), LVRF always reads 0. LVRF is set to 1 when a low voltage reset occurs. This flag can only be cleared by writing a 1. Writing a 0 has no effect.<br>0 Low voltage reset has not occurred.<br>1 Low voltage reset has occurred. |
| 4<br>LOCKIF | **PLL Lock Interrupt Flag** — LOCKIF is set to 1 when LOCK status bit changes. This flag can only be cleared by writing a 1. Writing a 0 has no effect.If enabled (LOCKIE = 1), LOCKIF causes an interrupt request.<br>0 No change in LOCK bit.<br>1 LOCK bit has changed. |
| 3<br>LOCK | **Lock Status Bit** — LOCK reflects the current state of PLL lock condition. This bit is cleared in self-clock mode. Writes have no effect.<br>0 PLL VCO is not within the desired tolerance of the target frequency.<br>1 PLL VCO is within the desired tolerance of the target frequency. |
| 2<br>TRACK | **Track Status Bit** — TRACK reflects the current state of PLL track condition. This bit is cleared in self-clock mode. Writes have no effect.<br>0 Acquisition mode status.<br>1 Tracking mode status. |

**Table 9-2. CRGFLG Field Descriptions (continued)**

| Field | Description |
|---|---|
| 1<br>SCMIF | **Self-Clock Mode Interrupt Flag** — SCMIF is set to 1 when SCM status bit changes. This flag can only be cleared by writing a 1. Writing a 0 has no effect. If enabled (SCMIE=1), SCMIF causes an interrupt request.<br>0 No change in SCM bit.<br>1 SCM bit has changed. |
| 0<br>SCM | **Self-Clock Mode Status Bit** — SCM reflects the current clocking mode. Writes have no effect.<br>0 MCU is operating normally with OSCCLK available.<br>1 MCU is operating in self-clock mode with OSCCLK in an unknown state. All clocks are derived from PLLCLK running at its minimum frequency $f_{SCM}$. |

### 9.3.2.5 CRG Interrupt Enable Register (CRGINT)

This register enables CRG interrupt requests.

Module Base + 0x0004

| | 7 | 6 | 5 | 4 | 3 | 2 | 1 | 0 |
|---|---|---|---|---|---|---|---|---|
| R | RTIE | 0 | 0 | LOCKIE | 0 | 0 | SCMIE | 0 |
| W | | | | | | | | |
| Reset | 0 | 0 | 0 | 0 | 0 | 0 | 0 | 0 |

= Unimplemented or Reserved

**Figure 9-8. CRG Interrupt Enable Register (CRGINT)**

Read: anytime

Write: anytime

**Table 9-3. CRGINT Field Descriptions**

| Field | Description |
|---|---|
| 7<br>RTIE | **Real-Time Interrupt Enable Bit**<br>0 Interrupt requests from RTI are disabled.<br>1 Interrupt will be requested whenever RTIF is set. |
| 4<br>LOCKIE | **Lock Interrupt Enable Bit**<br>0 LOCK interrupt requests are disabled.<br>1 Interrupt will be requested whenever LOCKIF is set. |
| 1<br>SCMIE | **Self-Clock Mode Interrupt Enable Bit**<br>0 SCM interrupt requests are disabled.<br>1 Interrupt will be requested whenever SCMIF is set. |

### 9.3.2.6 CRG Clock Select Register (CLKSEL)

This register controls CRG clock selection. Refer to Figure 9-17 for details on the effect of each bit.

Module Base + 0x0005

| | 7 | 6 | 5 | 4 | 3 | 2 | 1 | 0 |
|---|---|---|---|---|---|---|---|---|
| R<br>W | PLLSEL | PSTP | SYSWAI | ROAWAI | PLLWAI | CWAI | RTIWAI | COPWAI |
| Reset | 0 | 0 | 0 | 0 | 0 | 0 | 0 | 0 |

**Figure 9-9. CRG Clock Select Register (CLKSEL)**

Read: anytime

Write: refer to each bit for individual write conditions

**Table 9-4. CLKSEL Field Descriptions**

| Field | Description |
|---|---|
| 7<br>PLLSEL | **PLL Select Bit** — Write anytime. Writing a 1 when LOCK = 0 and AUTO = 1, or TRACK = 0 and AUTO = 0 has no effect. This prevents the selection of an unstable PLLCLK as SYSCLK. PLLSEL bit is cleared when the MCU enters self-clock mode, stop mode or wait mode with PLLWAI bit set.<br>0 System clocks are derived from OSCCLK (Bus Clock = OSCCLK / 2).<br>1 System clocks are derived from PLLCLK (Bus Clock = PLLCLK / 2). |
| 6<br>PSTP | **Pseudo-Stop Bit** — Write: anytime — This bit controls the functionality of the oscillator during stop mode.<br>0 Oscillator is disabled in stop mode.<br>1 Oscillator continues to run in stop mode (pseudo-stop). The oscillator amplitude is reduced. Refer to oscillator block description for availability of a reduced oscillator amplitude.<br>**Note:** Pseudo-stop allows for faster stop recovery and reduces the mechanical stress and aging of the resonator in case of frequent stop conditions at the expense of a slightly increased power consumption.<br>**Note:** Lower oscillator amplitude exhibits lower power consumption but could have adverse effects during any electro-magnetic susceptibility (EMS) tests. |
| 5<br>SYSWAI | **System Clocks Stop in Wait Mode Bit** — Write: anytime<br>0 In wait mode, the system clocks continue to run.<br>1 In wait mode, the system clocks stop.<br>**Note:** RTI and COP are not affected by SYSWAI bit. |
| 4<br>ROAWAI | **Reduced Oscillator Amplitude in Wait Mode Bit** — Write: anytime — Refer to oscillator block description chapter for availability of a reduced oscillator amplitude. If no such feature exists in the oscillator block then setting this bit to 1 will not have any effect on power consumption.<br>0 Normal oscillator amplitude in wait mode.<br>1 Reduced oscillator amplitude in wait mode.<br>**Note:** Lower oscillator amplitude exhibits lower power consumption but could have adverse effects during any electro-magnetic susceptibility (EMS) tests. |
| 3<br>PLLWAI | **PLL Stops in Wait Mode Bit** — Write: anytime — If PLLWAI is set, the CRGV4 will clear the PLLSEL bit before entering wait mode. The PLLON bit remains set during wait mode but the PLL is powered down. Upon exiting wait mode, the PLLSEL bit has to be set manually if PLL clock is required.<br>While the PLLWAI bit is set the AUTO bit is set to 1 in order to allow the PLL to automatically lock on the selected target frequency after exiting wait mode.<br>0 PLL keeps running in wait mode.<br>1 PLL stops in wait mode. |

**Table 9-4. CLKSEL Field Descriptions (continued)**

| Field | Description |
|---|---|
| 2<br>CWAI | **Core Stops in Wait Mode Bit** — Write: anytime<br>0 Core clock keeps running in wait mode.<br>1 Core clock stops in wait mode. |
| 1<br>RTIWAI | **RTI Stops in Wait Mode Bit** — Write: anytime<br>0 RTI keeps running in wait mode.<br>1 RTI stops and initializes the RTI dividers whenever the part goes into wait mode. |
| 0<br>COPWAI | **COP Stops in Wait Mode Bit** — Normal modes: Write once —Special modes: Write anytime<br>0 COP keeps running in wait mode.<br>1 COP stops and initializes the COP dividers whenever the part goes into wait mode. |

### 9.3.2.7 CRG PLL Control Register (PLLCTL)

This register controls the PLL functionality.

Module Base + 0x0006

| | 7 | 6 | 5 | 4 | 3 | 2 | 1 | 0 |
|---|---|---|---|---|---|---|---|---|
| R<br>W | CME | PLLON | AUTO | ACQ | 0 | PRE | PCE | SCME |
| Reset | 1 | 1 | 1 | 1 | 0 | 0 | 0 | 1 |

= Unimplemented or Reserved

**Figure 9-10. CRG PLL Control Register (PLLCTL)**

Read: anytime

Write: refer to each bit for individual write conditions

**Table 9-5. PLLCTL Field Descriptions**

| Field | Description |
|---|---|
| 7<br>CME | **Clock Monitor Enable Bit** — CME enables the clock monitor. Write anytime except when SCM = 1.<br>0 Clock monitor is disabled.<br>1 Clock monitor is enabled. Slow or stopped clocks will cause a clock monitor reset sequence or self-clock mode.<br>**Note:** Operating with CME = 0 will not detect any loss of clock. In case of poor clock quality this could cause unpredictable operation of the MCU.<br>**Note:** In Stop Mode (PSTP = 0) the clock monitor is disabled independently of the CME bit setting and any loss of clock will not be detected. |
| 6<br>PLLON | **Phase Lock Loop On Bit** — PLLON turns on the PLL circuitry. In self-clock mode, the PLL is turned on, but the PLLON bit reads the last latched value. Write anytime except when PLLSEL = 1.<br>0 PLL is turned off.<br>1 PLL is turned on. If AUTO bit is set, the PLL will lock automatically. |

**Table 9-5. PLLCTL Field Descriptions (continued)**

| Field | Description |
|---|---|
| 5<br>AUTO | **Automatic Bandwidth Control Bit** — AUTO selects either the high bandwidth (acquisition) mode or the low bandwidth (tracking) mode depending on how close to the desired frequency the VCO is running. Write anytime except when PLLWAI=1, because PLLWAI sets the AUTO bit to 1.<br>0 Automatic mode control is disabled and the PLL is under software control, using ACQ bit.<br>1 Automatic mode control is enabled and ACQ bit has no effect. |
| 4<br>ACQ | **Acquisition Bit** — Write anytime. If AUTO=1 this bit has no effect.<br>0 Low bandwidth filter is selected.<br>1 High bandwidth filter is selected. |
| 2<br>PRE | **RTI Enable during Pseudo-Stop Bit** — PRE enables the RTI during pseudo-stop mode. Write anytime.<br>0 RTI stops running during pseudo-stop mode.<br>1 RTI continues running during pseudo-stop mode.<br>**Note:** If the PRE bit is cleared the RTI dividers will go static while pseudo-stop mode is active. The RTI dividers will not initialize like in wait mode with RTIWAI bit set. |
| 1<br>PCE | **COP Enable during Pseudo-Stop Bit** — PCE enables the COP during pseudo-stop mode. Write anytime.<br>0 COP stops running during pseudo-stop mode<br>1 COP continues running during pseudo-stop mode<br>**Note:** If the PCE bit is cleared the COP dividers will go static while pseudo-stop mode is active. The COP dividers will *not* initialize like in wait mode with COPWAI bit set. |
| 0<br>SCME | **Self-Clock Mode Enable Bit** — Normal modes: Write once —Special modes: Write anytime — SCME can not be cleared while operating in self-clock mode (SCM=1).<br>0 Detection of crystal clock failure causes clock monitor reset (see Section 9.5.1, “Clock Monitor Reset”).<br>1 Detection of crystal clock failure forces the MCU in self-clock mode (see Section 9.4.7.2, “Self-Clock Mode”). |

### 9.3.2.8 CRG RTI Control Register (RTICTL)

This register selects the timeout period for the real-time interrupt.

Module Base + 0x0007

| | 7 | 6 | 5 | 4 | 3 | 2 | 1 | 0 |
|---|---|---|---|---|---|---|---|---|
| R | 0 | RTR6 | RTR5 | RTR4 | RTR3 | RTR2 | RTR1 | RTR0 |
| W | | | | | | | | |
| Reset | 0 | 0 | 0 | 0 | 0 | 0 | 0 | 0 |

= Unimplemented or Reserved

**Figure 9-11. CRG RTI Control Register (RTICTL)**

Read: anytime

Write: anytime

**NOTE**

A write to this register initializes the RTI counter.

### Table 9-6. RTICTL Field Descriptions

| Field | Description |
|---|---|
| 6:4<br>RTR[6:4] | **Real-Time Interrupt Prescale Rate Select Bits** — These bits select the prescale rate for the RTI. See Table 9-7. |
| 3:0<br>RTR[3:0] | **Real-Time Interrupt Modulus Counter Select Bits** — These bits select the modulus counter target value to provide additional granularity. Table 9-7 shows all possible divide values selectable by the RTICTL register. The source clock for the RTI is OSCCLK. |

### Table 9-7. RTI Frequency Divide Rates

| RTR[3:0] | RTR[6:4] = | | | | | | | |
|---|---|---|---|---|---|---|---|---|
| | **000 (OFF)** | **001 ($2^{10}$)** | **010 ($2^{11}$)** | **011 ($2^{12}$)** | **100 ($2^{13}$)** | **101 ($2^{14}$)** | **110 ($2^{15}$)** | **111 ($2^{16}$)** |
| **0000 (÷1)** | OFF* | $2^{10}$ | $2^{11}$ | $2^{12}$ | $2^{13}$ | $2^{14}$ | $2^{15}$ | $2^{16}$ |
| **0001 (÷2)** | OFF* | $2x2^{10}$ | $2x2^{11}$ | $2x2^{12}$ | $2x2^{13}$ | $2x2^{14}$ | $2x2^{15}$ | $2x2^{16}$ |
| **0010 (÷3)** | OFF* | $3x2^{10}$ | $3x2^{11}$ | $3x2^{12}$ | $3x2^{13}$ | $3x2^{14}$ | $3x2^{15}$ | $3x2^{16}$ |
| **0011 (÷4)** | OFF* | $4x2^{10}$ | $4x2^{11}$ | $4x2^{12}$ | $4x2^{13}$ | $4x2^{14}$ | $4x2^{15}$ | $4x2^{16}$ |
| **0100 (÷5)** | OFF* | $5x2^{10}$ | $5x2^{11}$ | $5x2^{12}$ | $5x2^{13}$ | $5x2^{14}$ | $5x2^{15}$ | $5x2^{16}$ |
| **0101 (÷6)** | OFF* | $6x2^{10}$ | $6x2^{11}$ | $6x2^{12}$ | $6x2^{13}$ | $6x2^{14}$ | $6x2^{15}$ | $6x2^{16}$ |
| **0110 (÷7)** | OFF* | $7x2^{10}$ | $7x2^{11}$ | $7x2^{12}$ | $7x2^{13}$ | $7x2^{14}$ | $7x2^{15}$ | $7x2^{16}$ |
| **0111 (÷8)** | OFF* | $8x2^{10}$ | $8x2^{11}$ | $8x2^{12}$ | $8x2^{13}$ | $8x2^{14}$ | $8x2^{15}$ | $8x2^{16}$ |
| **1000 (÷9)** | OFF* | $9x2^{10}$ | $9x2^{11}$ | $9x2^{12}$ | $9x2^{13}$ | $9x2^{14}$ | $9x2^{15}$ | $9x2^{16}$ |
| **1001 (÷10)** | OFF* | $10x2^{10}$ | $10x2^{11}$ | $10x2^{12}$ | $10x2^{13}$ | $10x2^{14}$ | $10x2^{15}$ | $10x2^{16}$ |
| **1010 (÷11)** | OFF* | $11x2^{10}$ | $11x2^{11}$ | $11x2^{12}$ | $11x2^{13}$ | $11x2^{14}$ | $11x2^{15}$ | $11x2^{16}$ |
| **1011 (÷12)** | OFF* | $12x2^{10}$ | $12x2^{11}$ | $12x2^{12}$ | $12x2^{13}$ | $12x2^{14}$ | $12x2^{15}$ | $12x2^{16}$ |
| **1100 (÷ 13)** | OFF* | $13x2^{10}$ | $13x2^{11}$ | $13x2^{12}$ | $13x2^{13}$ | $13x2^{14}$ | $13x2^{15}$ | $13x2^{16}$ |
| **1101 (÷14)** | OFF* | $14x2^{10}$ | $14x2^{11}$ | $14x2^{12}$ | $14x2^{13}$ | $14x2^{14}$ | $14x2^{15}$ | $14x2^{16}$ |
| **1110 (÷15)** | OFF* | $15x2^{10}$ | $15x2^{11}$ | $15x2^{12}$ | $15x2^{13}$ | $15x2^{14}$ | $15x2^{15}$ | $15x2^{16}$ |
| **1111 (÷ 16)** | OFF* | $16x2^{10}$ | $16x2^{11}$ | $16x2^{12}$ | $16x2^{13}$ | $16x2^{14}$ | $16x2^{15}$ | $16x2^{16}$ |

* Denotes the default value out of reset.This value should be used to disable the RTI to ensure future backwards compatibility.

### 9.3.2.9 CRG COP Control Register (COPCTL)

This register controls the COP (computer operating properly) watchdog.

Module Base + 0x0008

| | 7 | 6 | 5 | 4 | 3 | 2 | 1 | 0 |
|---|---|---|---|---|---|---|---|---|
| R<br>W | WCOP | RSBCK | 0 | 0 | 0 | CR2 | CR1 | CR0 |
| Reset | 0 | 0 | 0 | 0 | 0 | 0 | 0 | 0 |

= Unimplemented or Reserved

**Figure 9-12. CRG COP Control Register (COPCTL)**

Read: anytime

Write: WCOP, CR2, CR1, CR0: once in user mode, anytime in special mode

Write: RSBCK: once

**Table 9-8. COPCTL Field Descriptions**

| Field | Description |
|---|---|
| 7<br>WCOP | **Window COP Mode Bit** — When set, a write to the ARMCOP register must occur in the last 25% of the selected period. A write during the first 75% of the selected period will reset the part. As long as all writes occur during this window, 0x0055 can be written as often as desired. As soon as 0x00AA is written after the 0x0055, the time-out logic restarts and the user must wait until the next window before writing to ARMCOP. Table 9-9 shows the exact duration of this window for the seven available COP rates.<br>0 Normal COP operation<br>1 Window COP operation |
| 6<br>RSBCK | COP and RTI Stop in Active BDM Mode Bit<br>0 Allows the COP and RTI to keep running in active BDM mode.<br>1 Stops the COP and RTI counters whenever the part is in active BDM mode. |
| 2:0<br>CR[2:0] | **COP Watchdog Timer Rate Select** — These bits select the COP time-out rate (see Table 9-9). The COP time-out period is OSCCLK period divided by CR[2:0] value. Writing a nonzero value to CR[2:0] enables the COP counter and starts the time-out period. A COP counter time-out causes a system reset. This can be avoided by periodically (before time-out) reinitializing the COP counter via the ARMCOP register. |

**Table 9-9. COP Watchdog Rates[(1)]**

| CR2 | CR1 | CR0 | OSCCLK Cycles to Time Out |
|---|---|---|---|
| 0 | 0 | 0 | COP disabled |
| 0 | 0 | 1 | $2^{14}$ |
| 0 | 1 | 0 | $2^{16}$ |
| 0 | 1 | 1 | $2^{18}$ |
| 1 | 0 | 0 | $2^{20}$ |
| 1 | 0 | 1 | $2^{22}$ |
| 1 | 1 | 0 | $2^{23}$ |
| 1 | 1 | 1 | $2^{24}$ |

1. OSCCLK cycles are referenced from the previous COP time-out reset (writing 0x0055/0x00AA to the ARMCOP register)

### 9.3.2.10 Reserved Register (FORBYP)

**NOTE**

This reserved register is designed for factory test purposes only, and is not intended for general user access. Writing to this register when in special modes can alter the CRG's functionality.

Module Base + 0x0009

| | 7 | 6 | 5 | 4 | 3 | 2 | 1 | 0 |
|---|---|---|---|---|---|---|---|---|
| R | 0 | 0 | 0 | 0 | 0 | 0 | 0 | 0 |
| W | | | | | | | | |
| Reset | 0 | 0 | 0 | 0 | 0 | 0 | 0 | 0 |

= Unimplemented or Reserved

**Figure 9-13. Reserved Register (FORBYP)**

Read: always read 0x0000 except in special modes

Write: only in special modes

### 9.3.2.11 Reserved Register (CTCTL)

**NOTE**

This reserved register is designed for factory test purposes only, and is not intended for general user access. Writing to this register when in special test modes can alter the CRG's functionality.

Module Base + 0x000A

| | 7 | 6 | 5 | 4 | 3 | 2 | 1 | 0 |
|---|---|---|---|---|---|---|---|---|
| R | 0 | 0 | 0 | 0 | 0 | 0 | 0 | 0 |
| W | | | | | | | | |
| Reset | 0 | 0 | 0 | 0 | 0 | 0 | 0 | 0 |

= Unimplemented or Reserved

**Figure 9-14. Reserved Register (CTCTL)**

Read: always read 0x0080 except in special modes

Write: only in special modes

#### 9.3.2.12 CRG COP Timer Arm/Reset Register (ARMCOP)

This register is used to restart the COP time-out period.

Module Base + 0x000B

| | 7 | 6 | 5 | 4 | 3 | 2 | 1 | 0 |
|---|---|---|---|---|---|---|---|---|
| R | 0 | 0 | 0 | 0 | 0 | 0 | 0 | 0 |
| W | Bit 7 | Bit 6 | Bit 5 | Bit 4 | Bit 3 | Bit 2 | Bit 1 | Bit 0 |
| Reset | 0 | 0 | 0 | 0 | 0 | 0 | 0 | 0 |

**Figure 9-15. ARMCOP Register Diagram**

Read: always reads 0x0000

Write: anytime

When the COP is disabled (CR[2:0] = “000”) writing to this register has no effect.

When the COP is enabled by setting CR[2:0] nonzero, the following applies:

> Writing any value other than 0x0055 or 0x00AA causes a COP reset. To restart the COP time-out period you must write 0x0055 followed by a write of 0x00AA. Other instructions may be executed between these writes but the sequence (0x0055, 0x00AA) must be completed prior to COP end of time-out period to avoid a COP reset. Sequences of 0x0055 writes or sequences of 0x00AA writes are allowed. When the WCOP bit is set, 0x0055 and 0x00AA writes must be done in the last 25% of the selected time-out period; writing any value in the first 75% of the selected period will cause a COP reset.

## 9.4 Functional Description

This section gives detailed informations on the internal operation of the design.

### 9.4.1 Phase Locked Loop (PLL)

The PLL is used to run the MCU from a different time base than the incoming OSCCLK. For increased flexibility, OSCCLK can be divided in a range of 1 to 16 to generate the reference frequency. This offers a finer multiplication granularity. The PLL can multiply this reference clock by a multiple of 2, 4, 6,... 126,128 based on the SYNR register.

$$\mathrm{PLLCLK} = 2 \times \mathrm{OSCCLK} \times \frac{[\mathrm{SYNR} + 1]}{[\mathrm{REFDV} + 1]}$$

**CAUTION**

> Although it is possible to set the two dividers to command a very high clock frequency, do not exceed the specified bus frequency limit for the MCU.
> If (PLLSEL = 1), Bus Clock = PLLCLK / 2

The PLL is a frequency generator that operates in either acquisition mode or tracking mode, depending on the difference between the output frequency and the target frequency. The PLL can change between acquisition and tracking modes either automatically or manually.

The VCO has a minimum operating frequency, which corresponds to the self-clock mode frequency $f_{SCM}$.

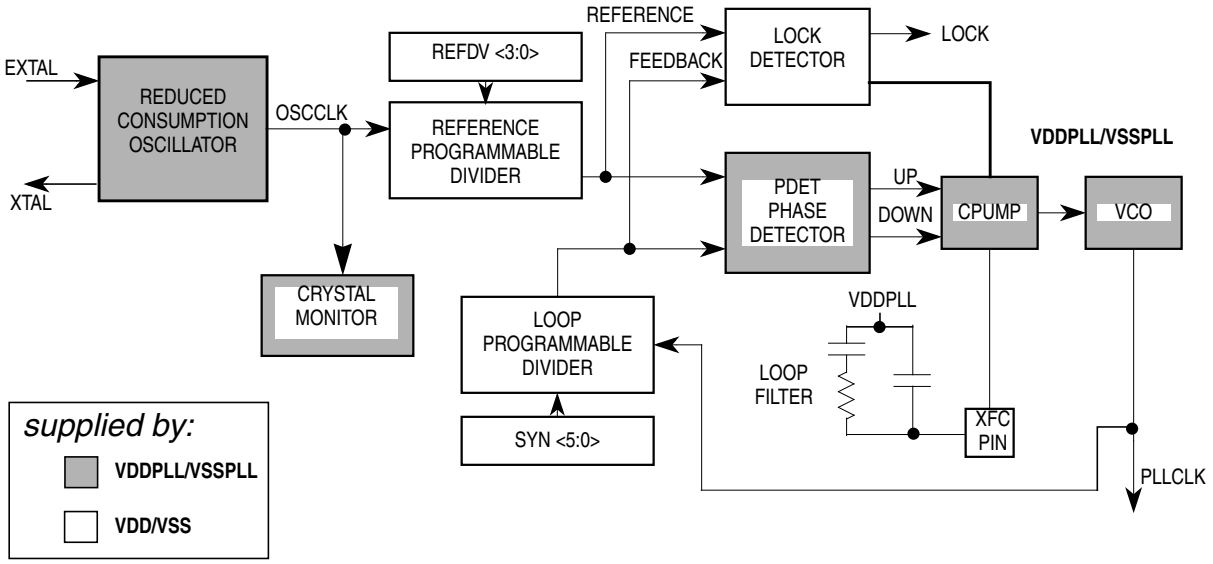


**Figure 9-16. PLL Functional Diagram**

### 9.4.1.1 PLL Operation

The oscillator output clock signal (OSCCLK) is fed through the reference programmable divider and is divided in a range of 1 to 16 (REFDV+1) to output the reference clock. The VCO output clock, (PLLCLK) is fed back through the programmable loop divider and is divided in a range of 2 to 128 in increments of [2 x (SYNR +1)] to output the feedback clock. See Figure 9-16.

The phase detector then compares the feedback clock, with the reference clock. Correction pulses are generated based on the phase difference between the two signals. The loop filter then slightly alters the DC voltage on the external filter capacitor connected to XFC pin, based on the width and direction of the correction pulse. The filter can make fast or slow corrections depending on its mode, as described in the next subsection. The values of the external filter network and the reference frequency determine the speed of the corrections and the stability of the PLL.

### 9.4.1.2 Acquisition and Tracking Modes

The lock detector compares the frequencies of the feedback clock, and the reference clock. Therefore, the speed of the lock detector is directly proportional to the final reference frequency. The circuit determines the mode of the PLL and the lock condition based on this comparison.

The PLL filter can be manually or automatically configured into one of two possible operating modes:

- Acquisition mode

  In acquisition mode, the filter can make large frequency corrections to the VCO. This mode is used at PLL start-up or when the PLL has suffered a severe noise hit and the VCO frequency is far off the desired frequency. When in acquisition mode, the TRACK status bit is cleared in the CRGFLG register.
- Tracking mode

  In tracking mode, the filter makes only small corrections to the frequency of the VCO. PLL jitter is much lower in tracking mode, but the response to noise is also slower. The PLL enters tracking mode when the VCO frequency is nearly correct and the TRACK bit is set in the CRGFLG register.

The PLL can change the bandwidth or operational mode of the loop filter manually or automatically.

In automatic bandwidth control mode (AUTO = 1), the lock detector automatically switches between acquisition and tracking modes. Automatic bandwidth control mode also is used to determine when the PLL clock (PLLCLK) is safe to use as the source for the system and core clocks. If PLL LOCK interrupt requests are enabled, the software can wait for an interrupt request and then check the LOCK bit. If CPU interrupts are disabled, software can poll the LOCK bit continuously (during PLL start-up, usually) or at periodic intervals. In either case, only when the LOCK bit is set, is the PLLCLK clock safe to use as the source for the system and core clocks. If the PLL is selected as the source for the system and core clocks and the LOCK bit is clear, the PLL has suffered a severe noise hit and the software must take appropriate action, depending on the application.

The following conditions apply when the PLL is in automatic bandwidth control mode (AUTO = 1):

- The TRACK bit is a read-only indicator of the mode of the filter.
- The TRACK bit is set when the VCO frequency is within a certain tolerance, $\Delta_{trk}$, and is clear when the VCO frequency is out of a certain tolerance, $\Delta_{unt}$.
- The LOCK bit is a read-only indicator of the locked state of the PLL.
- The LOCK bit is set when the VCO frequency is within a certain tolerance, $\Delta_{Lock}$, and is cleared when the VCO frequency is out of a certain tolerance, $\Delta_{unl}$.
- CPU interrupts can occur if enabled (LOCKIE = 1) when the lock condition changes, toggling the LOCK bit.

The PLL can also operate in manual mode (AUTO = 0). Manual mode is used by systems that do not require an indicator of the lock condition for proper operation. Such systems typically operate well below the maximum system frequency ($f_{sys}$) and require fast start-up. The following conditions apply when in manual mode:

- ACQ is a writable control bit that controls the mode of the filter. Before turning on the PLL in manual mode, the ACQ bit should be asserted to configure the filter in acquisition mode.
- After turning on the PLL by setting the PLLON bit software must wait a given time ($t_{acq}$) before entering tracking mode (ACQ = 0).
- After entering tracking mode software must wait a given time ($t_{al}$) before selecting the PLLCLK as the source for system and core clocks (PLLSEL = 1).

### 9.4.2 System Clocks Generator

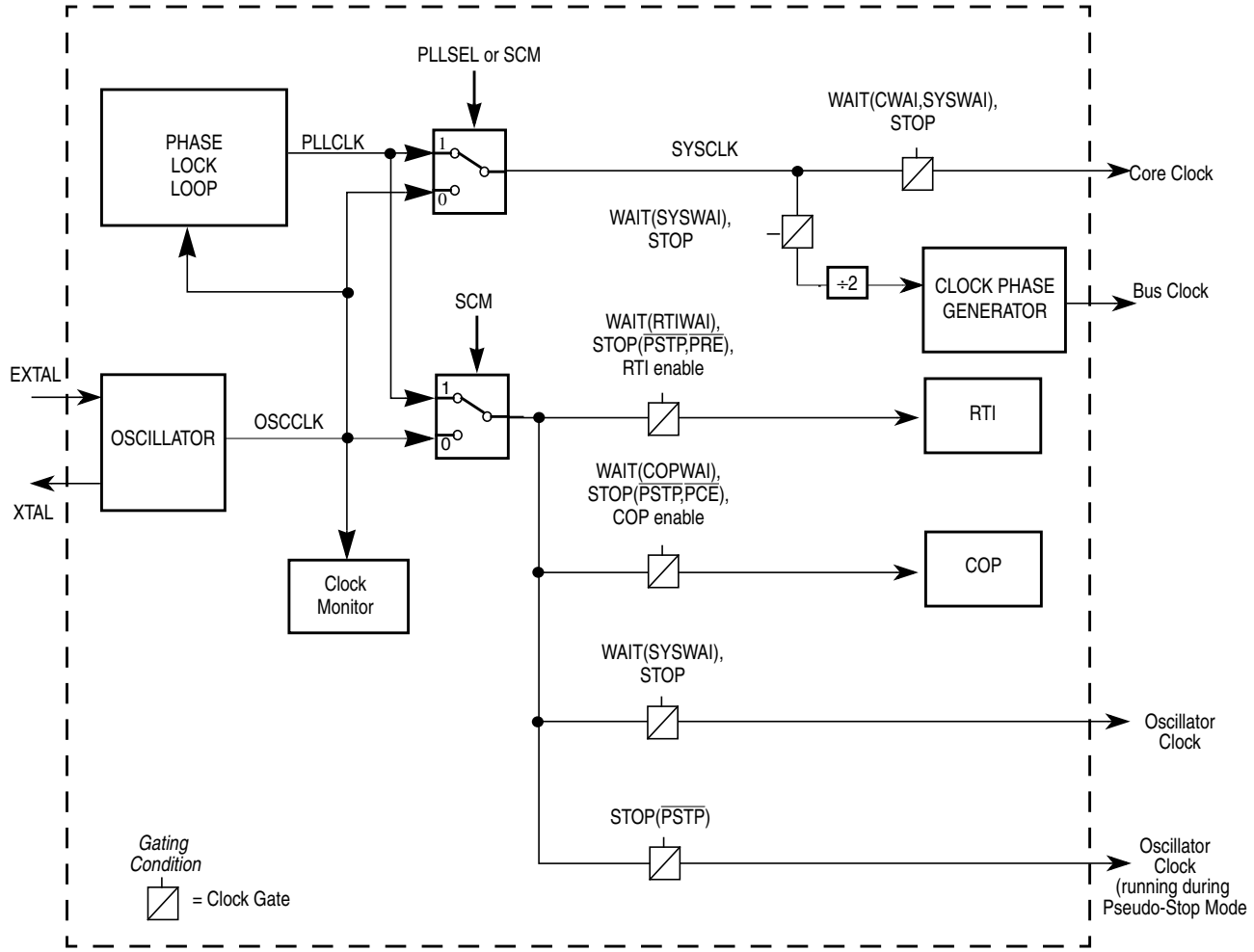


**Figure 9-17. System Clocks Generator**

The clock generator creates the clocks used in the MCU (see Figure 9-17). The gating condition placed on top of the individual clock gates indicates the dependencies of different modes (stop, wait) and the setting of the respective configuration bits.

The peripheral modules use the bus clock. Some peripheral modules also use the oscillator clock. The memory blocks use the bus clock. If the MCU enters self-clock mode (see Section 9.4.7.2, “Self-Clock Mode”), oscillator clock source is switched to PLLCLK running at its minimum frequency $f_{SCM}$. The bus clock is used to generate the clock visible at the ECLK pin. The core clock signal is the clock for the CPU. The core clock is twice the bus clock as shown in Figure 9-18. But note that a CPU cycle corresponds to one bus clock.

PLL clock mode is selected with PLLSEL bit in the CLKSEL register. When selected, the PLL output clock drives SYSCLK for the main system including the CPU and peripherals. The PLL cannot be turned off by clearing the PLLON bit, if the PLL clock is selected. When PLLSEL is changed, it takes a maximum

of 4 OSCCLK plus 4 PLLCLK cycles to make the transition. During the transition, all clocks freeze and CPU activity ceases.

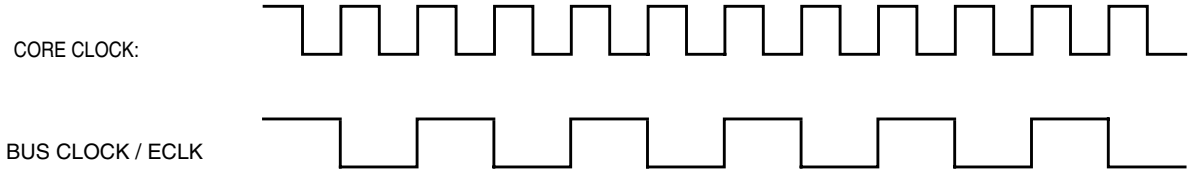


**Figure 9-18. Core Clock and Bus Clock Relationship**

### 9.4.3 Clock Monitor (CM)

If no OSCCLK edges are detected within a certain time, the clock monitor within the oscillator block generates a clock monitor fail event. The CRGV4 then asserts self-clock mode or generates a system reset depending on the state of SCME bit. If the clock monitor is disabled or the presence of clocks is detected no failure is indicated by the oscillator block.The clock monitor function is enabled/disabled by the CME control bit.

### 9.4.4 Clock Quality Checker

The clock monitor performs a coarse check on the incoming clock signal. The clock quality checker provides a more accurate check in addition to the clock monitor.

A clock quality check is triggered by any of the following events:

- Power-on reset (POR)
- Low voltage reset (LVR)
- Wake-up from full stop mode (exit full stop)
- Clock monitor fail indication (CM fail)

A time window of 50000 VCO clock cycles[1] is called *check window*.

A number greater equal than 4096 rising OSCCLK edges within a *check window* is called *osc ok*. Note that *osc ok* immediately terminates the current *check window*. See Figure 9-19 as an example.

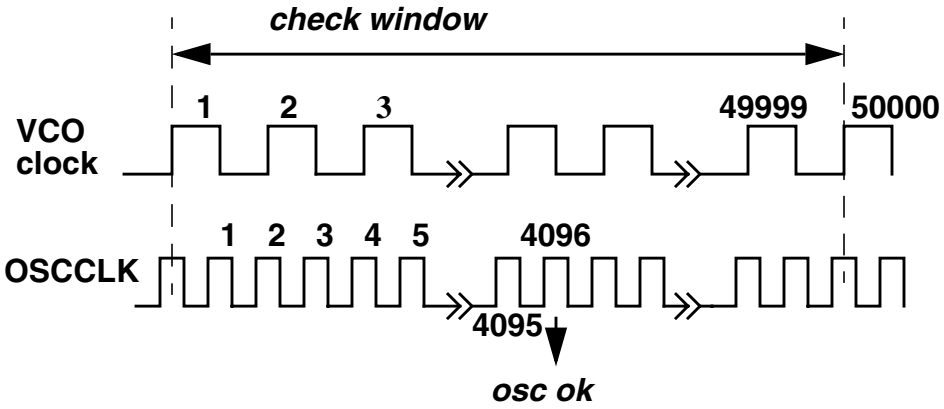


**Figure 9-19. Check Window Example**

1. VCO clock cycles are generated by the PLL when running at minimum frequency $f_{SCM}$.

The sequence for clock quality check is shown in Figure 9-20.

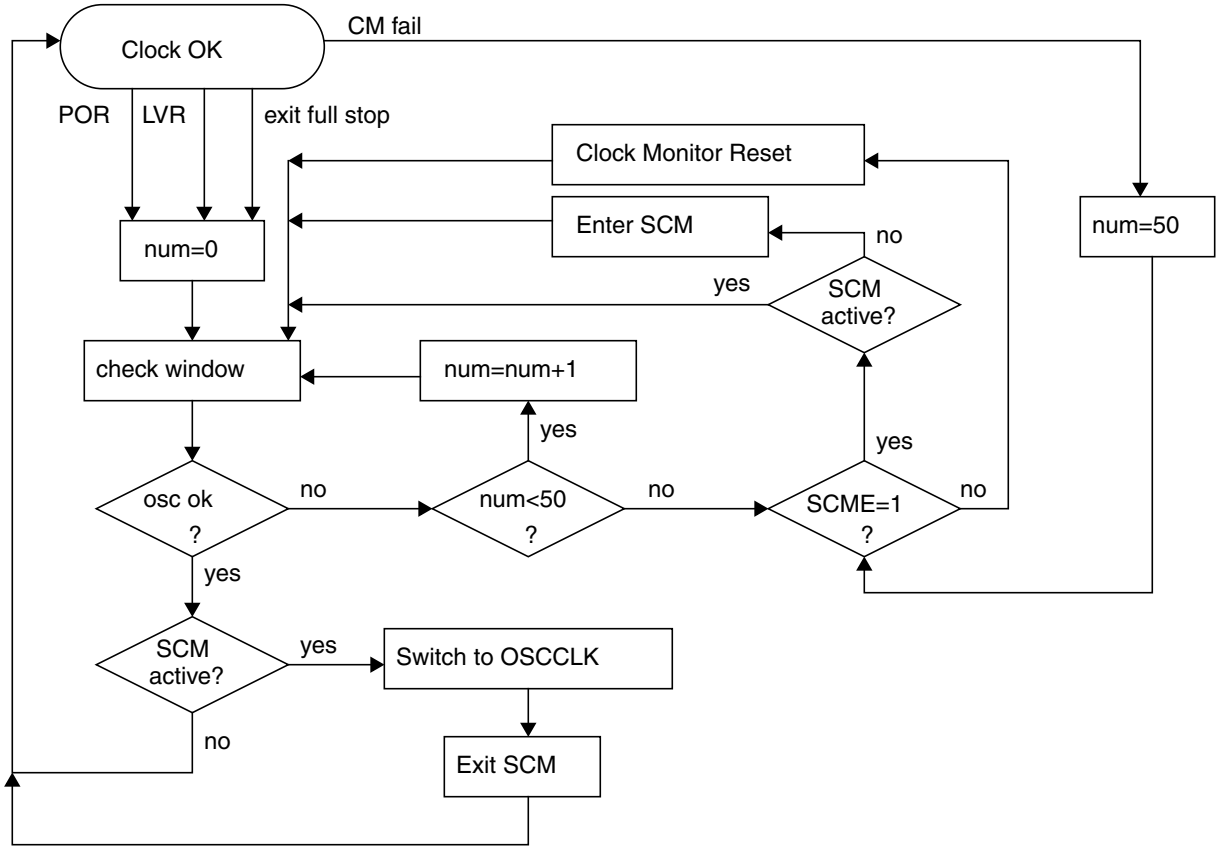


**Figure 9-20. Sequence for Clock Quality Check**

## NOTE

Remember that in parallel to additional actions caused by self-clock mode or clock monitor reset[1] handling the clock quality checker **continues** to check the OSCCLK signal.

## NOTE

The clock quality checker enables the PLL and the voltage regulator (VREG) anytime a clock check has to be performed. An ongoing clock quality check could also cause a running PLL ($f_{SCM}$) and an active VREG during pseudo-stop mode or wait mode

1. A Clock Monitor Reset will always set the SCME bit to logical'1'

### 9.4.5 Computer Operating Properly Watchdog (COP)

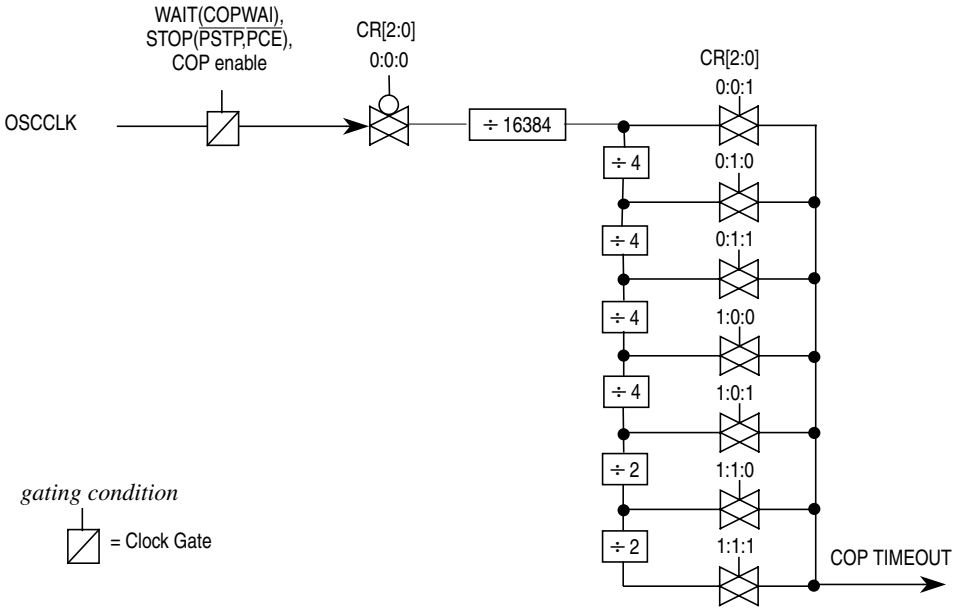


**Figure 9-21. Clock Chain for COP**

The COP (free running watchdog timer) enables the user to check that a program is running and sequencing properly. The COP is disabled out of reset. When the COP is being used, software is responsible for keeping the COP from timing out. If the COP times out it is an indication that the software is no longer being executed in the intended sequence; thus a system reset is initiated (see Section 9.5.2, "Computer Operating Properly Watchdog (COP) Reset)." The COP runs with a gated OSCCLK (see Section Figure 9-21., "Clock Chain for COP"). Three control bits in the COPCTL register allow selection of seven COP time-out periods.

When COP is enabled, the program must write 0x0055 and 0x00AA (in this order) to the ARMCOP register during the selected time-out period. As soon as this is done, the COP time-out period is restarted. If the program fails to do this and the COP times out, the part will reset. Also, if any value other than 0x0055 or 0x00AA is written, the part is immediately reset.

Windowed COP operation is enabled by setting WCOP in the COPCTL register. In this mode, writes to the ARMCOP register to clear the COP timer must occur in the last 25% of the selected time-out period. A premature write will immediately reset the part.

If PCE bit is set, the COP will continue to run in pseudo-stop mode.

### 9.4.6 Real-Time Interrupt (RTI)

The RTI can be used to generate a hardware interrupt at a fixed periodic rate. If enabled (by setting RTIE=1), this interrupt will occur at the rate selected by the RTICTL register. The RTI runs with a gated OSCCLK (see Section Figure 9-22., "Clock Chain for RTI"). At the end of the RTI time-out period the RTIF flag is set to 1 and a new RTI time-out period starts immediately.

A write to the RTICTL register restarts the RTI time-out period.

If the PRE bit is set, the RTI will continue to run in pseudo-stop mode.

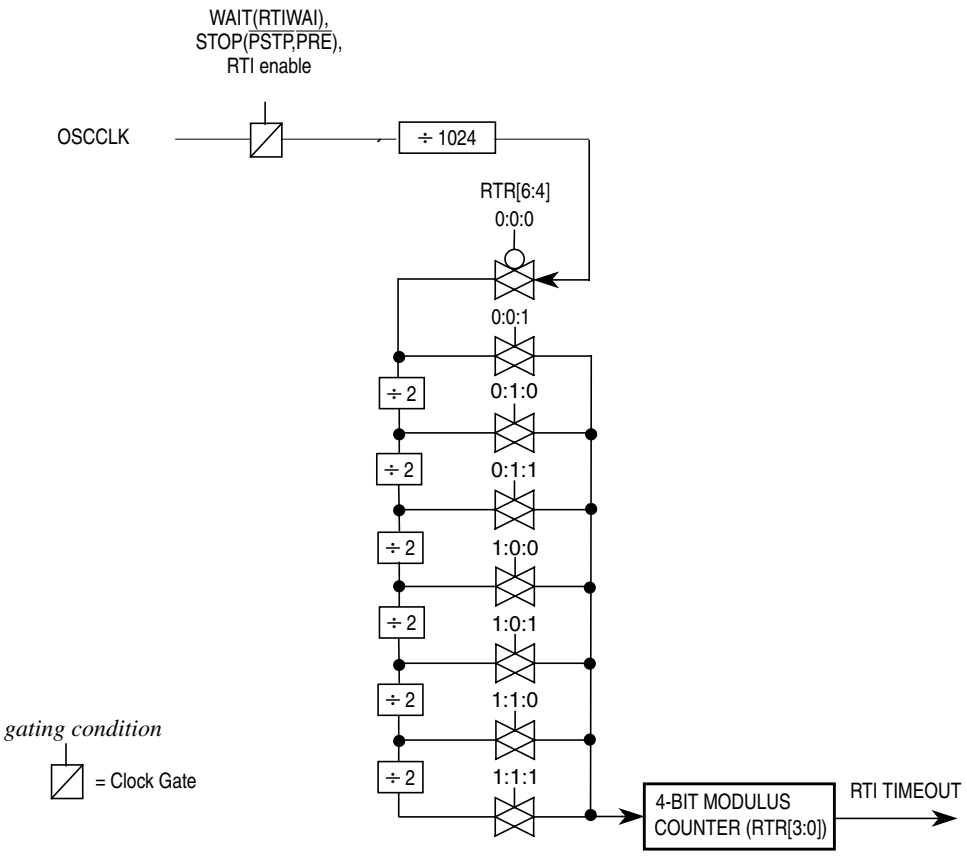


**Figure 9-22. Clock Chain for RTI**

## 9.4.7 Modes of Operation

### 9.4.7.1 Normal Mode

The CRGV4 block behaves as described within this specification in all normal modes.

### 9.4.7.2 Self-Clock Mode

The VCO has a minimum operating frequency, $f_{SCM}$. If the external clock frequency is not available due to a failure or due to long crystal start-up time, the bus clock and the core clock are derived from the VCO running at minimum operating frequency; this mode of operation is called self-clock mode. This requires CME = 1 and SCME = 1. If the MCU was clocked by the PLL clock prior to entering self-clock mode, the PLLSEL bit will be cleared. If the external clock signal has stabilized again, the CRG will automatically select OSCCLK to be the system clock and return to normal mode. See Section 9.4.4, “Clock Quality Checker” for more information on entering and leaving self-clock mode.

**NOTE**

In order to detect a potential clock loss, the CME bit should be always enabled (CME=1).

If CME bit is disabled and the MCU is configured to run on PLL clock (PLLCLK), a loss of external clock (OSCCLK) will not be detected and will cause the system clock to drift towards the VCO's minimum frequency $f_{SCM}$. As soon as the external clock is available again the system clock ramps up to its PLL target frequency. If the MCU is running on external clock any loss of clock will cause the system to go static.

### 9.4.8 Low-Power Operation in Run Mode

The RTI can be stopped by setting the associated rate select bits to 0.

The COP can be stopped by setting the associated rate select bits to 0.

### 9.4.9 Low-Power Operation in Wait Mode

The WAI instruction puts the MCU in a low power consumption stand-by mode depending on setting of the individual bits in the CLKSEL register. All individual wait mode configuration bits can be superposed. This provides enhanced granularity in reducing the level of power consumption during wait mode. Table 9-10 lists the individual configuration bits and the parts of the MCU that are affected in wait mode.

**Table 9-10. MCU Configuration During Wait Mode**

| | PLLWAI | CWAI | SYSWAI | RTIWAI | COPWAI | ROAWAI |
|---|---|---|---|---|---|---|
| **PLL** | stopped | — | — | — | — | — |
| **Core** | — | stopped | stopped | — | — | — |
| **System** | — | — | stopped | — | — | — |
| **RTI** | — | — | — | stopped | — | — |
| **COP** | — | — | — | — | stopped | — |
| **Oscillator** | — | — | — | — | — | reduced[1] |

1. Refer to oscillator block description for availability of a reduced oscillator amplitude.

After executing the WAI instruction the core requests the CRG to switch MCU into wait mode. The CRG then checks whether the PLLWAI, CWAI and SYSWAI bits are asserted (see Figure 9-23). Depending on the configuration the CRG switches the system and core clocks to OSCCLK by clearing the PLLSEL bit, disables the PLL, disables the core clocks and finally disables the remaining system clocks. As soon as all clocks are switched off wait mode is active.

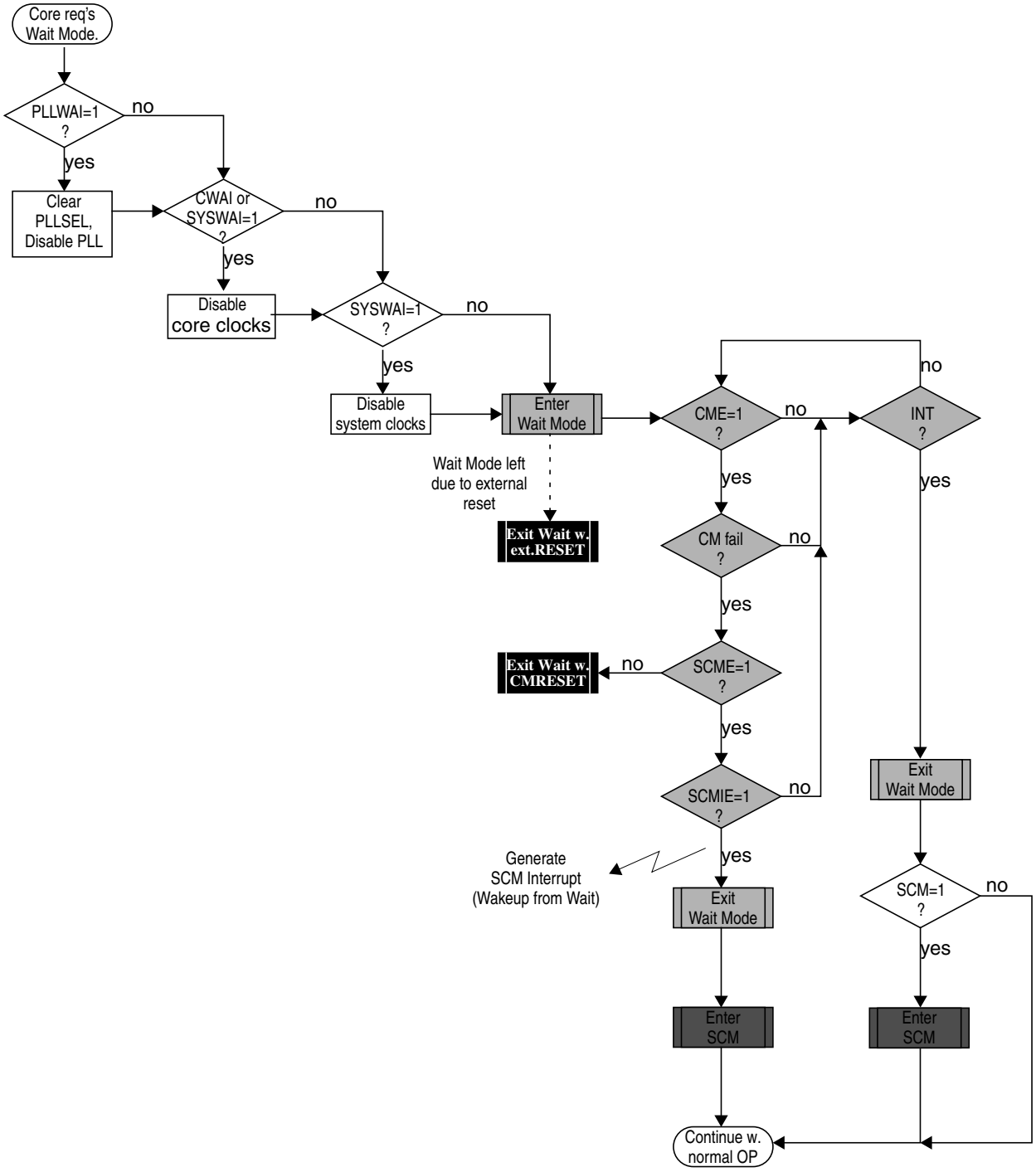


**Figure 9-23. Wait Mode Entry/Exit Sequence**

There are five different scenarios for the CRG to restart the MCU from wait mode:

- External reset
- Clock monitor reset
- COP reset
- Self-clock mode interrupt
- Real-time interrupt (RTI)

If the MCU gets an external reset during wait mode active, the CRG asynchronously restores all configuration bits in the register space to its default settings and starts the reset generator. After completing the reset sequence processing begins by fetching the normal reset vector. Wait mode is exited and the MCU is in run mode again.

If the clock monitor is enabled (CME=1) the MCU is able to leave wait mode when loss of oscillator/external clock is detected by a clock monitor fail. If the SCME bit is not asserted the CRG generates a clock monitor fail reset (CMRESET). The CRG's behavior for CMRESET is the same compared to external reset, but another reset vector is fetched after completion of the reset sequence. If the SCME bit is asserted the CRG generates a SCM interrupt if enabled (SCMIE=1). After generating the interrupt the CRG enters self-clock mode and starts the clock quality checker (see Section 9.4.4, "Clock Quality Checker"). Then the MCU continues with normal operation.If the SCM interrupt is blocked by SCMIE = 0, the SCMIF flag will be asserted and clock quality checks will be performed but the MCU will not wake-up from wait mode.

If any other interrupt source (e.g. RTI) triggers exit from wait mode the MCU immediately continues with normal operation. If the PLL has been powered-down during wait mode the PLLSEL bit is cleared and the MCU runs on OSCCLK after leaving wait mode. The software must manually set the PLLSEL bit again, in order to switch system and core clocks to the PLLCLK.

If wait mode is entered from self-clock mode, the CRG will continue to check the clock quality until clock check is successful. The PLL and voltage regulator (VREG) will remain enabled.

Table 9-11 summarizes the outcome of a clock loss while in wait mode.

**Table 9-11. Outcome of Clock Loss in Wait Mode**

| CME | SCME | SCMIE | CRG Actions |
|---|---|---|---|
| 0 | X | X | Clock failure --><br>No action, clock loss not detected. |
| 1 | 0 | X | Clock failure --><br>CRG performs Clock Monitor Reset immediately |
| 1 | 1 | 0 | Clock failure --><br><br>Scenario 1: OSCCLK **recovers** prior to exiting Wait Mode.<br>– MCU remains in Wait Mode,<br>– VREG enabled,<br>– PLL enabled,<br>– SCM activated,<br>– Start Clock Quality Check,<br>– Set SCMIF interrupt flag.<br><br>*Some time later OSCCLK recovers.*<br><br>– CM no longer indicates a failure,<br>– 4096 OSCCLK cycles later Clock Quality Check indicates clock o.k.,<br>– SCM deactivated,<br>– PLL disabled depending on PLLWAI,<br>– VREG remains enabled *(never gets disabled in Wait Mode)*.<br>– MCU remains in Wait Mode.<br><br>*Some time later either a wakeup interrupt occurs (no SCM interrupt)*<br>– Exit Wait Mode using OSCCLK as system clock (SYSCLK),<br>– Continue normal operation.<br><br>*or an External Reset is applied.*<br>– Exit Wait Mode using OSCCLK as system clock,<br>– Start reset sequence.<br><br>Scenario 2: OSCCLK **does not recover** prior to exiting Wait Mode.<br>– MCU remains in Wait Mode,<br>– VREG enabled,<br>– PLL enabled,<br>– SCM activated,<br>– Start Clock Quality Check,<br>– Set SCMIF interrupt flag,<br>– Keep performing Clock Quality Checks (could continue infinitely) while in Wait Mode.<br><br>*Some time later either a wakeup interrupt occurs (no SCM interrupt)*<br>– Exit Wait Mode in SCM using PLL clock ($f_{SCM}$) as system clock,<br>– Continue to perform additional Clock Quality Checks until OSCCLK is o.k. again.<br><br>or an External RESET is applied.<br>– Exit Wait Mode in SCM using PLL clock ($f_{SCM}$) as system clock,<br>– Start reset sequence,<br>– Continue to perform additional Clock Quality Checks until OSCCLK is o.k.again. |

**Table 9-11. Outcome of Clock Loss in Wait Mode (continued)**

| CME | SCME | SCMIE | CRG Actions |
|---|---|---|---|
| 1 | 1 | 1 | Clock failure --><br>– VREG enabled,<br>– PLL enabled,<br>– SCM activated,<br>– Start Clock Quality Check,<br>– SCMIF set.<br><br>SCMIF generates Self-Clock Mode wakeup interrupt.<br><br>– Exit Wait Mode in SCM using PLL clock ($f_{SCM}$) as system clock,<br>– Continue to perform a additional Clock Quality Checks until OSCCLK is o.k. again. |

## 9.4.10 Low-Power Operation in Stop Mode

All clocks are stopped in STOP mode, dependent of the setting of the PCE, PRE and PSTP bit. The oscillator is disabled in STOP mode unless the PSTP bit is set. All counters and dividers remain frozen but do not initialize. If the PRE or PCE bits are set, the RTI or COP continues to run in pseudo-stop mode. In addition to disabling system and core clocks the CRG requests other functional units of the MCU (e.g. voltage-regulator) to enter their individual power-saving modes (if available). This is the main difference between pseudo-stop mode and wait mode.

After executing the STOP instruction the core requests the CRG to switch the MCU into stop mode. If the PLLSEL bit remains set when entering stop mode, the CRG will switch the system and core clocks to OSCCLK by clearing the PLLSEL bit. Then the CRG disables the PLL, disables the core clock and finally disables the remaining system clocks. As soon as all clocks are switched off, stop mode is active.

If pseudo-stop mode (PSTP = 1) is entered from self-clock mode the CRG will continue to check the clock quality until clock check is successful. The PLL and the voltage regulator (VREG) will remain enabled. If full stop mode (PSTP = 0) is entered from self-clock mode an ongoing clock quality check will be stopped. A complete timeout window check will be started when stop mode is exited again.

Wake-up from stop mode also depends on the setting of the PSTP bit.

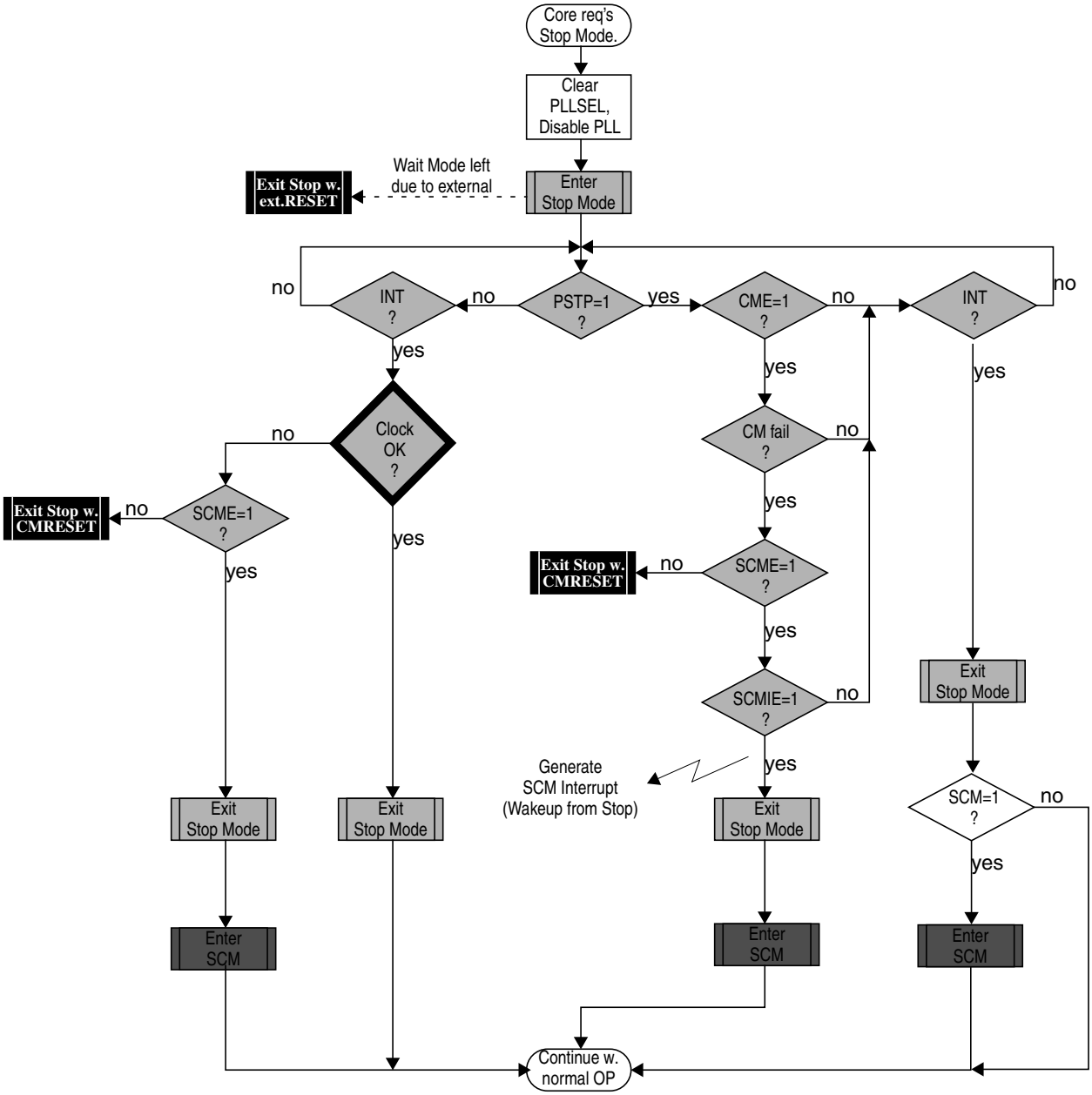


**Figure 9-24. Stop Mode Entry/Exit Sequence**

### 9.4.10.1 Wake-Up from Pseudo-Stop (PSTP=1)

Wake-up from pseudo-stop is the same as wake-up from wait mode. There are also three different scenarios for the CRG to restart the MCU from pseudo-stop mode:

- External reset
- Clock monitor fail
- Wake-up interrupt

If the MCU gets an external reset during pseudo-stop mode active, the CRG asynchronously restores all configuration bits in the register space to its default settings and starts the reset generator. After completing the reset sequence processing begins by fetching the normal reset vector. Pseudo-stop mode is exited and the MCU is in run mode again.

If the clock monitor is enabled (CME = 1) the MCU is able to leave pseudo-stop mode when loss of oscillator/external clock is detected by a clock monitor fail. If the SCME bit is not asserted the CRG generates a clock monitor fail reset (CMRESET). The CRG's behavior for CMRESET is the same compared to external reset, but another reset vector is fetched after completion of the reset sequence. If the SCME bit is asserted the CRG generates a SCM interrupt if enabled (SCMIE=1). After generating the interrupt the CRG enters self-clock mode and starts the clock quality checker (see Section 9.4.4, "Clock Quality Checker"). Then the MCU continues with normal operation. If the SCM interrupt is blocked by SCMIE = 0, the SCMIF flag will be asserted but the CRG will not wake-up from pseudo-stop mode.

If any other interrupt source (e.g. RTI) triggers exit from pseudo-stop mode the MCU immediately continues with normal operation. Because the PLL has been powered-down during stop mode the PLLSEL bit is cleared and the MCU runs on OSCCLK after leaving stop mode. The software must set the PLLSEL bit again, in order to switch system and core clocks to the PLLCLK.

Table 9-12 summarizes the outcome of a clock loss while in pseudo-stop mode.

**Table 9-12. Outcome of Clock Loss in Pseudo-Stop Mode**

| CME | SCME | SCMIE | CRG Actions |
|---|---|---|---|
| 0 | X | X | Clock failure --><br>No action, clock loss not detected. |
| 1 | 0 | X | Clock failure --><br>CRG performs Clock Monitor Reset immediately |
| 1 | 1 | 0 | Clock Monitor failure --><br><br>Scenario 1: OSCCLK **recovers** prior to exiting Pseudo-Stop Mode.<br>– MCU remains in Pseudo-Stop Mode,<br>– VREG enabled,<br>– PLL enabled,<br>– SCM activated,<br>– Start Clock Quality Check,<br>– Set SCMIF interrupt flag.<br>*Some time later OSCCLK recovers.*<br><br>– CM no longer indicates a failure,<br>– 4096 OSCCLK cycles later Clock Quality Check indicates clock o.k.,<br>– SCM deactivated,<br>– PLL disabled,<br>– VREG disabled.<br>– MCU remains in Pseudo-Stop Mode.<br><br>S*ome time later either a wakeup interrupt occurs (no SCM interrupt)*<br>– Exit Pseudo-Stop Mode using OSCCLK as system clock (SYSCLK),<br>– Continue normal operation.<br><br>*or an External Reset is applied.*<br>– Exit Pseudo-Stop Mode using OSCCLK as system clock,<br>– Start reset sequence.<br><br>Scenario 2: OSCCLK **does not recover** prior to exiting Pseudo-Stop Mode.<br>– MCU remains in Pseudo-Stop Mode,<br>– VREG enabled,<br>– PLL enabled,<br>– SCM activated,<br>– Start Clock Quality Check,<br>– Set SCMIF interrupt flag,<br>– Keep performing Clock Quality Checks (could continue infinitely) while in Pseudo-Stop Mode.<br><br>S*ome time later either a wakeup interrupt occurs (no SCM interrupt)*<br>– Exit Pseudo-Stop Mode in SCM using PLL clock ($f_{SCM}$) as system clock<br>– Continue to perform additional Clock Quality Checks until OSCCLK is o.k. again.<br><br>or an External RESET is applied.<br>– Exit Pseudo-Stop Mode in SCM using PLL clock ($f_{SCM}$) as system clock<br>– Start reset sequence,<br>– Continue to perform additional Clock Quality Checks until OSCCLK is o.k.again. |

**Table 9-12. Outcome of Clock Loss in Pseudo-Stop Mode (continued)**

| CME | SCME | SCMIE | CRG Actions |
|---|---|---|---|
| 1 | 1 | 1 | Clock failure --><br>– VREG enabled,<br>– PLL enabled,<br>– SCM activated,<br>– Start Clock Quality Check,<br>– SCMIF set.<br><br>SCMIF generates Self-Clock Mode wakeup interrupt.<br><br>– Exit Pseudo-Stop Mode in SCM using PLL clock ($f_{SCM}$) as system clock,<br>– Continue to perform a additional Clock Quality Checks until OSCCLK is o.k. again. |

### 9.4.10.2 Wake-up from Full Stop (PSTP=0)

The MCU requires an external interrupt or an external reset in order to wake-up from stop mode.

If the MCU gets an external reset during full stop mode active, the CRG asynchronously restores all configuration bits in the register space to its default settings and will perform a maximum of 50 clock *check_windows* (see Section 9.4.4, “Clock Quality Checker”). After completing the clock quality check the CRG starts the reset generator. After completing the reset sequence processing begins by fetching the normal reset vector. Full stop mode is exited and the MCU is in run mode again.

If the MCU is woken-up by an interrupt, the CRG will also perform a maximum of 50 clock *check_window*s (see Section 9.4.4, “Clock Quality Checker”). If the clock quality check is successful, the CRG will release all system and core clocks and will continue with normal operation. If all clock checks within the timeout-window are failing, the CRG will switch to self-clock mode or generate a clock monitor reset (CMRESET) depending on the setting of the SCME bit.

Because the PLL has been powered-down during stop mode the PLLSEL bit is cleared and the MCU runs on OSCCLK after leaving stop mode. The software must manually set the PLLSEL bit again, in order to switch system and core clocks to the PLLCLK.

**NOTE**

In full stop mode, the clock monitor is disabled and any loss of clock will not be detected.

## 9.5 Resets

This section describes how to reset the CRGV4 and how the CRGV4 itself controls the reset of the MCU. It explains all special reset requirements. Because the reset generator for the MCU is part of the CRG, this section also describes all automatic actions that occur during or as a result of individual reset conditions. The reset values of registers and signals are provided in Section 9.3, “Memory Map and Register

Definition." All reset sources are listed in Table 9-13. Refer to the device overview chapter for related vector addresses and priorities.

**Table 9-13. Reset Summary**

| Reset Source | Local Enable |
|---|---|
| Power-on Reset | None |
| Low Voltage Reset | None |
| External Reset | None |
| Clock Monitor Reset | PLLCTL (CME=1, SCME=0) |
| COP Watchdog Reset | COPCTL (CR[2:0] nonzero) |

The reset sequence is initiated by any of the following events:

- Low level is detected at the $\overline{\text{RESET}}$ pin (external reset).
- Power on is detected.
- Low voltage is detected.
- COP watchdog times out.
- Clock monitor failure is detected and self-clock mode was disabled (SCME = 0).

Upon detection of any reset event, an internal circuit drives the $\overline{\text{RESET}}$ pin low for 128 SYSCLK cycles (see Figure 9-25). Because entry into reset is asynchronous it does not require a running SYSCLK. However, the internal reset circuit of the CRGV4 cannot sequence out of current reset condition without a running SYSCLK. The number of 128 SYSCLK cycles might be increased by n = 3 to 6 additional SYSCLK cycles depending on the internal synchronization latency. After 128+n SYSCLK cycles the $\overline{\text{RESET}}$ pin is released. The reset generator of the CRGV4 waits for additional 64 SYSCLK cycles and then samples the RESET pin to determine the originating source. Table 9-14 shows which vector will be fetched.

**Table 9-14. Reset Vector Selection**

| Sampled $\overline{\text{RESET}}$ Pin (64 Cycles After Release) | Clock Monitor Reset Pending | COP Reset Pending | Vector Fetch |
|---|---|---|---|
| 1 | 0 | 0 | POR / LVR / External Reset |
| 1 | 1 | X | Clock Monitor Reset |
| 1 | 0 | 1 | COP Reset |
| 0 | X | X | POR / LVR / External Reset with rise of $\overline{\text{RESET}}$ pin |

**NOTE**

External circuitry connected to the $\overline{\text{RESET}}$ pin should not include a large capacitance that would interfere with the ability of this signal to rise to a valid logic 1 within 64 SYSCLK cycles after the low drive is released.

The internal reset of the MCU remains asserted while the reset generator completes the 192 SYSCLK long reset sequence. The reset generator circuitry always makes sure the internal reset is deasserted synchronously after completion of the 192 SYSCLK cycles. In case the $\overline{\text{RESET}}$ pin is externally driven low for more than these 192 SYSCLK cycles (external reset), the internal reset remains asserted too.

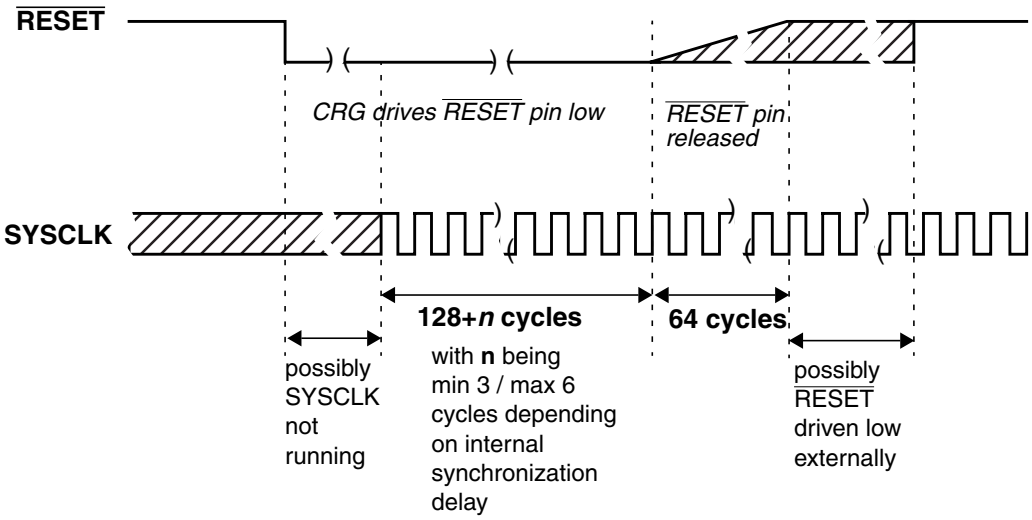


**Figure 9-25. $\overline{\text{RESET}}$ Timing**

## 9.5.1 Clock Monitor Reset

The CRGV4 generates a clock monitor reset in case all of the following conditions are true:

- Clock monitor is enabled (CME=1)
- Loss of clock is detected
- Self-clock mode is disabled (SCME=0)

The reset event asynchronously forces the configuration registers to their default settings (see Section 9.3, “Memory Map and Register Definition”). In detail the CME and the SCME are reset to logical ‘1’ (which doesn’t change the state of the CME bit, because it has already been set). As a consequence, the CRG immediately enters self-clock mode and starts its internal reset sequence. In parallel the clock quality check starts. As soon as clock quality check indicates a valid oscillator clock the CRG switches to OSCCLK and leaves self-clock mode. Because the clock quality checker is running in parallel to the reset generator, the CRG may leave self-clock mode while completing the internal reset sequence. When the reset sequence is finished the CRG checks the internally latched state of the clock monitor fail circuit. If a clock monitor fail is indicated processing begins by fetching the clock monitor reset vector.

## 9.5.2 Computer Operating Properly Watchdog (COP) Reset

When COP is enabled, the CRG expects sequential write of 0x0055 and 0x00AA (in this order) to the ARMCOP register during the selected time-out period. As soon as this is done, the COP time-out period restarts. If the program fails to do this the CRG will generate a reset. Also, if any value other than 0x0055 or 0x00AA is written, the CRG immediately generates a reset. In case windowed COP operation is enabled

writes (0x0055 or 0x00AA) to the ARMCOP register must occur in the last 25% of the selected time-out period. A premature write the CRG will immediately generate a reset.

As soon as the reset sequence is completed the reset generator checks the reset condition. If no clock monitor failure is indicated and the latched state of the COP timeout is true, processing begins by fetching the COP vector.

### 9.5.3 Power-On Reset, Low Voltage Reset

The on-chip voltage regulator detects when $V_{DD}$ to the MCU has reached a certain level and asserts power-on reset or low voltage reset or both. As soon as a power-on reset or low voltage reset is triggered the CRG performs a quality check on the incoming clock signal. As soon as clock quality check indicates a valid oscillator clock signal the reset sequence starts using the oscillator clock. If after 50 check windows the clock quality check indicated a non-valid oscillator clock the reset sequence starts using self-clock mode.

Figure 9-26 and Figure 9-27 show the power-up sequence for cases when the $\overline{RESET}$ pin is tied to $V_{DD}$ and when the $\overline{RESET}$ pin is held low.

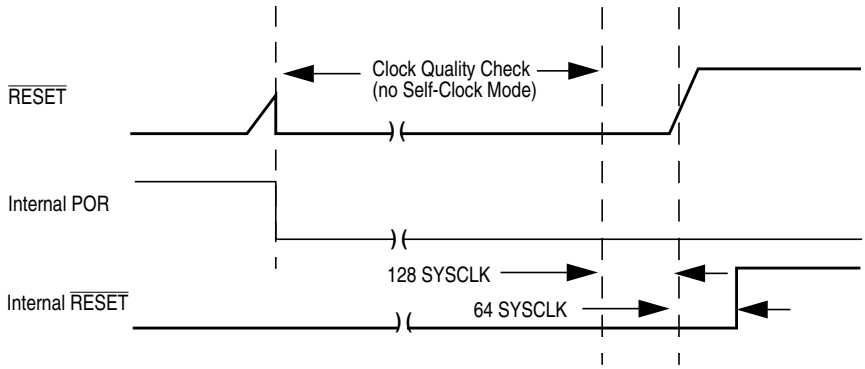


**Figure 9-26. $\overline{RESET}$ Pin Tied to $V_{DD}$ (by a Pull-Up Resistor)**

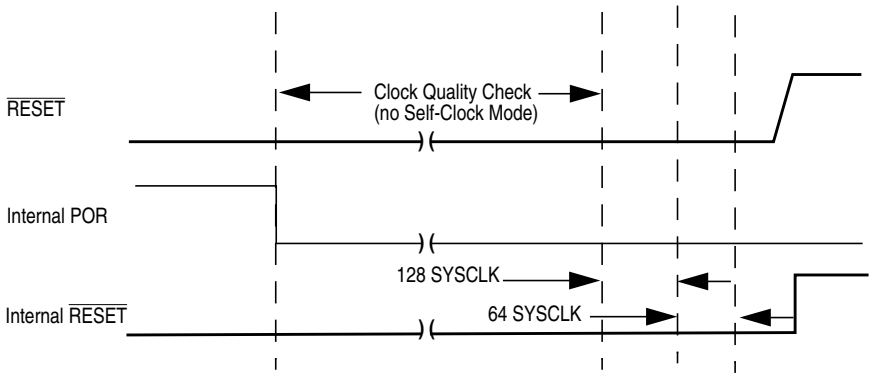


**Figure 9-27. $\overline{RESET}$ Pin Held Low Externally**

## 9.6 Interrupts

The interrupts/reset vectors requested by the CRG are listed in Table 9-15. Refer to the device overview chapter for related vector addresses and priorities.

**Table 9-15. CRG Interrupt Vectors**

| Interrupt Source | CCR Mask | Local Enable |
|---|---|---|
| Real-time interrupt | I bit | CRGINT (RTIE) |
| LOCK interrupt | I bit | CRGINT (LOCKIE) |
| SCM interrupt | I bit | CRGINT (SCMIE) |

### 9.6.1 Real-Time Interrupt

The CRGV4 generates a real-time interrupt when the selected interrupt time period elapses. RTI interrupts are locally disabled by setting the RTIE bit to 0. The real-time interrupt flag (RTIF) is set to 1 when a timeout occurs, and is cleared to 0 by writing a 1 to the RTIF bit.

The RTI continues to run during pseudo-stop mode if the PRE bit is set to 1. This feature can be used for periodic wakeup from pseudo-stop if the RTI interrupt is enabled.

### 9.6.2 PLL Lock Interrupt

The CRGV4 generates a PLL lock interrupt when the LOCK condition of the PLL has changed, either from a locked state to an unlocked state or vice versa. Lock interrupts are locally disabled by setting the LOCKIE bit to 0. The PLL Lock interrupt flag (LOCKIF) is set to1 when the LOCK condition has changed, and is cleared to 0 by writing a 1 to the LOCKIF bit.

### 9.6.3 Self-Clock Mode Interrupt

The CRGV4 generates a self-clock mode interrupt when the SCM condition of the system has changed, either entered or exited self-clock mode. SCM conditions can only change if the self-clock mode enable bit (SCME) is set to 1. SCM conditions are caused by a failing clock quality check after power-on reset (POR) or low voltage reset (LVR) or recovery from full stop mode (PSTP = 0) or clock monitor failure. For details on the clock quality check refer to Section 9.4.4, “Clock Quality Checker.” If the clock monitor is enabled (CME = 1) a loss of external clock will also cause a SCM condition (SCME = 1).

SCM interrupts are locally disabled by setting the SCMIE bit to 0. The SCM interrupt flag (SCMIF) is set to 1 when the SCM condition has changed, and is cleared to 0 by writing a 1 to the SCMIF bit.

# Chapter 10
# Freescale's Scalable Controller Area Network (S12MSCANV2)

## 10.1 Introduction

Freescale's scalable controller area network (S12MSCANV2) definition is based on the MSCAN12 definition, which is the specific implementation of the MSCAN concept targeted for the M68HC12 microcontroller family.

The module is a communication controller implementing the CAN 2.0A/B protocol as defined in the Bosch specification dated September 1991. For users to fully understand the MSCAN specification, it is recommended that the Bosch specification be read first to familiarize the reader with the terms and concepts contained within this document.

Though not exclusively intended for automotive applications, CAN protocol is designed to meet the specific requirements of a vehicle serial data bus: real-time processing, reliable operation in the EMI environment of a vehicle, cost-effectiveness, and required bandwidth.

MSCAN uses an advanced buffer arrangement resulting in predictable real-time behavior and simplified application software.

### 10.1.1 Glossary

ACK: Acknowledge of CAN message

CAN: Controller Area Network

CRC: Cyclic Redundancy Code

EOF: End of Frame

FIFO: First-In-First-Out Memory

IFS: Inter-Frame Sequence

SOF: Start of Frame

CPU bus: CPU related read/write data bus

CAN bus: CAN protocol related serial bus

oscillator clock: Direct clock from external oscillator

bus clock: CPU bus realated clock

CAN clock: CAN protocol related clock

### 10.1.2 Block Diagram

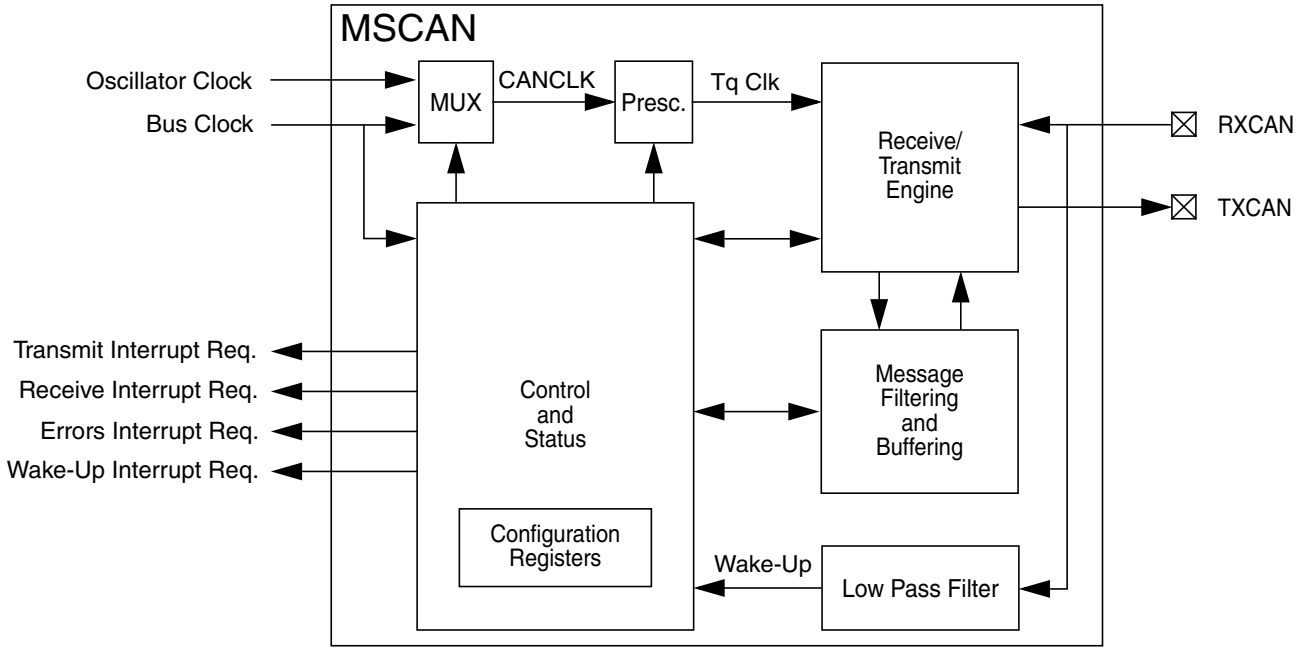


**Figure 10-1. MSCAN Block Diagram**

### 10.1.3 Features

The basic features of the MSCAN are as follows:

- Implementation of the CAN protocol — Version 2.0A/B
  - — Standard and extended data frames
  - — Zero to eight bytes data length
  - — Programmable bit rate up to 1 Mbps[1]
  - — Support for remote frames
- Five receive buffers with FIFO storage scheme
- Three transmit buffers with internal prioritization using a "local priority" concept
- Flexible maskable identifier filter supports two full-size (32-bit) extended identifier filters, or four 16-bit filters, or eight 8-bit filters
- Programmable wakeup functionality with integrated low-pass filter
- Programmable loopback mode supports self-test operation
- Programmable listen-only mode for monitoring of CAN bus
- Separate signalling and interrupt capabilities for all CAN receiver and transmitter error states (warning, error passive, bus-off)
- Programmable MSCAN clock source either bus clock or oscillator clock
- Internal timer for time-stamping of received and transmitted messages
- Three low-power modes: sleep, power down, and MSCAN enable
- Global initialization of configuration registers

1. Depending on the actual bit timing and the clock jitter of the PLL.

### 10.1.4 Modes of Operation

The following modes of operation are specific to the MSCAN. See Section 10.4, "Functional Description," for details.

- Listen-Only Mode
- MSCAN Sleep Mode
- MSCAN Initialization Mode
- MSCAN Power Down Mode

## 10.2 External Signal Description

The MSCAN uses two external pins:

### 10.2.1 RXCAN — CAN Receiver Input Pin

RXCAN is the MSCAN receiver input pin.

### 10.2.2 TXCAN — CAN Transmitter Output Pin

TXCAN is the MSCAN transmitter output pin. The TXCAN output pin represents the logic level on the CAN bus:

0 = Dominant state
1 = Recessive state

### 10.2.3 CAN System

A typical CAN system with MSCAN is shown in Figure 10-2. Each CAN station is connected physically to the CAN bus lines through a transceiver device. The transceiver is capable of driving the large current needed for the CAN bus and has current protection against defective CAN or defective stations.

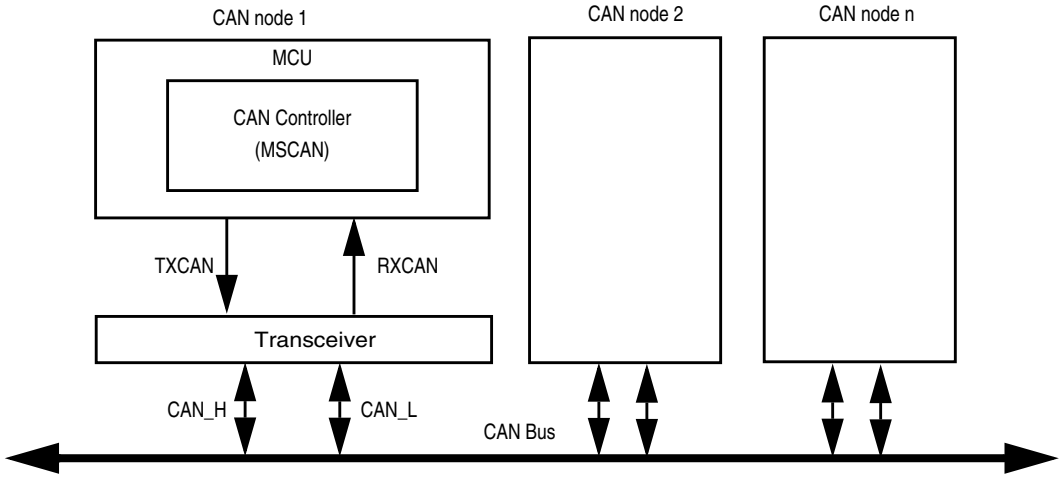


**Figure 10-2. CAN System**

## 10.3 Memory Map and Register Definition

This section provides a detailed description of all registers accessible in the MSCAN.

### 10.3.1 Module Memory Map

Figure 10-3 gives an overview on all registers and their individual bits in the MSCAN memory map. The *register address* results from the addition of *base address* and *address offset*. The *base address* is determined at the MCU level and can be found in the MCU memory map description. The *address offset* is defined at the module level.

The MSCAN occupies 64 bytes in the memory space. The base address of the MSCAN module is determined at the MCU level when the MCU is defined. The register decode map is fixed and begins at the first address of the module address offset.

The detailed register descriptions follow in the order they appear in the register map.

| Register Name | | Bit 7 | 6 | 5 | 4 | 3 | 2 | 1 | Bit 0 |
|---|---|---|---|---|---|---|---|---|---|
| 0x0000 CANCTL0 | R | RXFRM | RXACT | CSWAI | SYNCH | TIME | WUPE | SLPRQ | INITRQ |
| | W | | | | | | | | |
| 0x0001 CANCTL1 | R | CANE | CLKSRC | LOOPB | LISTEN | | WUPM | SLPAK | INITAK |
| | W | | | | | | | | |
| 0x0002 CANBTR0 | R | SJW1 | SJW0 | BRP5 | BRP4 | BRP3 | BRP2 | BRP1 | BRP0 |
| | W | | | | | | | | |
| 0x0003 CANBTR1 | R | SAMP | TSEG22 | TSEG21 | TSEG20 | TSEG13 | TSEG12 | TSEG11 | TSEG10 |
| | W | | | | | | | | |
| 0x0004 CANRFLG | R | WUPIF | CSCIF | RSTAT1 | RSTAT0 | TSTAT1 | TSTAT0 | OVRIF | RXF |
| | W | | | | | | | | |
| 0x0005 CANRIER | R | WUPIE | CSCIE | RSTATE1 | RSTATE0 | TSTATE1 | TSTATE0 | OVRIE | RXFIE |
| | W | | | | | | | | |
| 0x0006 CANTFLG | R | 0 | 0 | 0 | 0 | 0 | TXE2 | TXE1 | TXE0 |
| | W | | | | | | | | |
| 0x0007 CANTIER | R | 0 | 0 | 0 | 0 | 0 | TXEIE2 | TXEIE1 | TXEIE0 |
| | W | | | | | | | | |
| 0x0008 CANTARQ | R | 0 | 0 | 0 | 0 | 0 | ABTRQ2 | ABTRQ1 | ABTRQ0 |
| | W | | | | | | | | |
| 0x0009 CANTAAK | R | 0 | 0 | 0 | 0 | 0 | ABTAK2 | ABTAK1 | ABTAK0 |
| | W | | | | | | | | |
| 0x000A CANTBSEL | R | 0 | 0 | 0 | 0 | 0 | TX2 | TX1 | TX0 |
| | W | | | | | | | | |
| 0x000B CANIDAC | R | 0 | 0 | IDAM1 | IDAM0 | 0 | IDHIT2 | IDHIT1 | IDHIT0 |
| | W | | | | | | | | |
| 0x000C–0x000D Reserved | R | 0 | 0 | 0 | 0 | 0 | 0 | 0 | 0 |
| | W | | | | | | | | |
| 0x000E CANRXERR | R | RXERR7 | RXERR6 | RXERR5 | RXERR4 | RXERR3 | RXERR2 | RXERR1 | RXERR0 |
| | W | | | | | | | | |
| 0x000F CANTXERR | R | TXERR7 | TXERR6 | TXERR5 | TXERR4 | TXERR3 | TXERR2 | TXERR1 | TXERR0 |
| | W | | | | | | | | |

= Unimplemented or Reserved  u = Unaffected

**Figure 10-3. MSCAN Register Summary**

| Register Name | | Bit 7 | 6 | 5 | 4 | 3 | 2 | 1 | Bit 0 |
|---|---|---|---|---|---|---|---|---|---|
| 0x0010–0x0013 CANIDAR0–3 | R/W | AC7 | AC6 | AC5 | AC4 | AC3 | AC2 | AC1 | AC0 |
| 0x0014–0x0017 CANIDMRx | R/W | AM7 | AM6 | AM5 | AM4 | AM3 | AM2 | AM1 | AM0 |
| 0x0018–0x001B CANIDAR4–7 | R/W | AC7 | AC6 | AC5 | AC4 | AC3 | AC2 | AC1 | AC0 |
| 0x001C–0x001F CANIDMR4–7 | R/W | AM7 | AM6 | AM5 | AM4 | AM3 | AM2 | AM1 | AM0 |
| 0x0020–0x002F CANRXFG | R/W | See Section 10.3.3, "Programmer's Model of Message Storage" | | | | | | | |
| 0x0030–0x003F CANTXFG | R/W | See Section 10.3.3, "Programmer's Model of Message Storage" | | | | | | | |

= Unimplemented or Reserved  u = Unaffected

**Figure 10-3. MSCAN Register Summary (continued)**

## 10.3.2 Register Descriptions

This section describes in detail all the registers and register bits in the MSCAN module. Each description includes a standard register diagram with an associated figure number. Details of register bit and field function follow the register diagrams, in bit order. All bits of all registers in this module are completely synchronous to internal clocks during a register read.

### 10.3.2.1 MSCAN Control Register 0 (CANCTL0)

The CANCTL0 register provides various control bits of the MSCAN module as described below.

Module Base + 0x0000

| | 7 | 6 | 5 | 4 | 3 | 2 | 1 | 0 |
|---|---|---|---|---|---|---|---|---|
| R | RXFRM | RXACT | CSWAI | SYNCH | TIME | WUPE | SLPRQ | INITRQ |
| W | | | | | | | | |
| Reset: | 0 | 0 | 0 | 0 | 0 | 0 | 0 | 1 |

= Unimplemented

**Figure 10-4. MSCAN Control Register 0 (CANCTL0)**

**NOTE**

The CANCTL0 register, except WUPE, INITRQ, and SLPRQ, is held in the reset state when the initialization mode is active (INITRQ = 1 and INITAK = 1). This register is writable again as soon as the initialization mode is exited (INITRQ = 0 and INITAK = 0).

Read: Anytime

Write: Anytime when out of initialization mode; exceptions are read-only RXACT and SYNCH, RXFRM (which is set by the module only), and INITRQ (which is also writable in initialization mode).

**Table 10-1. CANCTL0 Register Field Descriptions**

| Field | Description |
|---|---|
| 7<br>RXFRM(1) | **Received Frame Flag** — This bit is read and clear only. It is set when a receiver has received a valid message correctly, independently of the filter configuration. After it is set, it remains set until cleared by software or reset. Clearing is done by writing a 1. Writing a 0 is ignored. This bit is not valid in loopback mode.<br>0 No valid message was received since last clearing this flag<br>1 A valid message was received since last clearing of this flag |
| 6<br>RXACT | **Receiver Active Status** — This read-only flag indicates the MSCAN is receiving a message. The flag is controlled by the receiver front end. This bit is not valid in loopback mode.<br>0 MSCAN is transmitting or idle[2]<br>1 MSCAN is receiving a message (including when arbitration is lost)(2) |
| 5<br>CSWAI(3) | **CAN Stops in Wait Mode** — Enabling this bit allows for lower power consumption in wait mode by disabling all the clocks at the CPU bus interface to the MSCAN module.<br>0 The module is not affected during wait mode<br>1 The module ceases to be clocked during wait mode |
| 4<br>SYNCH | **Synchronized Status** — This read-only flag indicates whether the MSCAN is synchronized to the CAN bus and able to participate in the communication process. It is set and cleared by the MSCAN.<br>0 MSCAN is not synchronized to the CAN bus<br>1 MSCAN is synchronized to the CAN bus |
| 3<br>TIME | **Timer Enable** — This bit activates an internal 16-bit wide free running timer which is clocked by the bit clock rate. If the timer is enabled, a 16-bit time stamp will be assigned to each transmitted/received message within the active TX/RX buffer. Right after the EOF of a valid message on the CAN bus, the time stamp is written to the highest bytes (0x000E, 0x000F) in the appropriate buffer (see Section 10.3.3, "Programmer's Model of Message Storage"). The internal timer is reset (all bits set to 0) when disabled. This bit is held low in initialization mode.<br>0 Disable internal MSCAN timer<br>1 Enable internal MSCAN timer |
| 2<br>WUPE(4) | **Wake-Up Enable** — This configuration bit allows the MSCAN to restart from sleep mode when traffic on CAN is detected (see Section 10.4.5.4, "MSCAN Sleep Mode").<br>0 Wake-up disabled — The MSCAN ignores traffic on CAN<br>1 Wake-up enabled — The MSCAN is able to restart |

**Table 10-1. CANCTL0 Register Field Descriptions (continued)**

| Field | Description |
|---|---|
| 1<br>SLPRQ[5] | **Sleep Mode Request** — This bit requests the MSCAN to enter sleep mode, which is an internal power saving mode (see Section 10.4.5.4, "MSCAN Sleep Mode"). The sleep mode request is serviced when the CAN bus is idle, i.e., the module is not receiving a message and all transmit buffers are empty. The module indicates entry to sleep mode by setting SLPAK = 1 (see Section 10.3.2.2, "MSCAN Control Register 1 (CANCTL1)"). SLPRQ cannot be set while the WUPIF flag is set (see Section 10.3.2.5, "MSCAN Receiver Flag Register (CANRFLG)"). Sleep mode will be active until SLPRQ is cleared by the CPU or, depending on the setting of WUPE, the MSCAN detects activity on the CAN bus and clears SLPRQ itself.<br>0 Running — The MSCAN functions normally<br>1 Sleep mode request — The MSCAN enters sleep mode when CAN bus idle |
| 0<br>INITRQ[6],[7] | **Initialization Mode Request** — When this bit is set by the CPU, the MSCAN skips to initialization mode (see Section 10.4.5.5, "MSCAN Initialization Mode"). Any ongoing transmission or reception is aborted and synchronization to the CAN bus is lost. The module indicates entry to initialization mode by setting INITAK = 1 (Section 10.3.2.2, "MSCAN Control Register 1 (CANCTL1)").<br>The following registers enter their hard reset state and restore their default values: CANCTL0[8], CANRFLG[9], CANRIER[10], CANTFLG, CANTIER, CANTARQ, CANTAAK, and CANTBSEL.<br>The registers CANCTL1, CANBTR0, CANBTR1, CANIDAC, CANIDAR0-7, and CANIDMR0-7 can only be written by the CPU when the MSCAN is in initialization mode (INITRQ = 1 and INITAK = 1). The values of the error counters are not affected by initialization mode.<br>When this bit is cleared by the CPU, the MSCAN restarts and then tries to synchronize to the CAN bus. If the MSCAN is not in bus-off state, it synchronizes after 11 consecutive recessive bits on the CAN bus; if the MSCAN is in bus-off state, it continues to wait for 128 occurrences of 11 consecutive recessive bits.<br>Writing to other bits in CANCTL0, CANRFLG, CANRIER, CANTFLG, or CANTIER must be done only after initialization mode is exited, which is INITRQ = 0 and INITAK = 0.<br>0 Normal operation<br>1 MSCAN in initialization mode |

1. The MSCAN must be in normal mode for this bit to become set.
2. See the Bosch CAN 2.0A/B specification for a detailed definition of transmitter and receiver states.
3. In order to protect from accidentally violating the CAN protocol, the TXCAN pin is immediately forced to a recessive state when the CPU enters wait (CSWAI = 1) or stop mode (see Section 10.4.5.2, "Operation in Wait Mode" and Section 10.4.5.3, "Operation in Stop Mode").
4. The CPU has to make sure that the WUPE register and the WUPIE wake-up interrupt enable register (see Section 10.3.2.6, "MSCAN Receiver Interrupt Enable Register (CANRIER)) is enabled, if the recovery mechanism from stop or wait is required.
5. The CPU cannot clear SLPRQ before the MSCAN has entered sleep mode (SLPRQ = 1 and SLPAK = 1).
6. The CPU cannot clear INITRQ before the MSCAN has entered initialization mode (INITRQ = 1 and INITAK = 1).
7. In order to protect from accidentally violating the CAN protocol, the TXCAN pin is immediately forced to a recessive state when the initialization mode is requested by the CPU. Thus, the recommended procedure is to bring the MSCAN into sleep mode (SLPRQ = 1 and SLPAK = 1) before requesting initialization mode.
8. Not including WUPE, INITRQ, and SLPRQ.
9. TSTAT1 and TSTAT0 are not affected by initialization mode.
10. RSTAT1 and RSTAT0 are not affected by initialization mode.

### 10.3.2.2 MSCAN Control Register 1 (CANCTL1)

The CANCTL1 register provides various control bits and handshake status information of the MSCAN module as described below.

Module Base + 0x0001

| | 7 | 6 | 5 | 4 | 3 | 2 | 1 | 0 |
|---|---|---|---|---|---|---|---|---|
| R | CANE | CLKSRC | LOOPB | LISTEN | | WUPM | SLPAK | INITAK |
| W | | | | | | | | |
| Reset: | 0 | 0 | 0 | 1 | 0 | 0 | 0 | 1 |

= Unimplemented

**Figure 10-5. MSCAN Control Register 1 (CANCTL1)**

Read: Anytime

Write: Anytime when INITRQ = 1 and INITAK = 1, except CANE which is write once in normal and anytime in special system operation modes when the MSCAN is in initialization mode (INITRQ = 1 and INITAK = 1).

**Table 10-2. CANCTL1 Register Field Descriptions**

| Field | Description |
|---|---|
| 7<br>CANE | **MSCAN Enable**<br>0 MSCAN module is disabled<br>1 MSCAN module is enabled |
| 6<br>CLKSRC | **MSCAN Clock Source** — This bit defines the clock source for the MSCAN module (only for systems with a clock generation module; Section 10.4.3.2, "Clock System," and Section Figure 10-42., "MSCAN Clocking Scheme,").<br>0 MSCAN clock source is the oscillator clock<br>1 MSCAN clock source is the bus clock |
| 5<br>LOOPB | **Loopback Self Test Mode** — When this bit is set, the MSCAN performs an internal loopback which can be used for self test operation. The bit stream output of the transmitter is fed back to the receiver internally. The RXCAN input pin is ignored and the TXCAN output goes to the recessive state (logic 1). The MSCAN behaves as it does normally when transmitting and treats its own transmitted message as a message received from a remote node. In this state, the MSCAN ignores the bit sent during the ACK slot in the CAN frame acknowledge field to ensure proper reception of its own message. Both transmit and receive interrupts are generated.<br>0 Loopback self test disabled<br>1 Loopback self test enabled |
| 4<br>LISTEN | **Listen Only Mode** — This bit configures the MSCAN as a CAN bus monitor. When LISTEN is set, all valid CAN messages with matching ID are received, but no acknowledgement or error frames are sent out (see Section 10.4.4.4, "Listen-Only Mode"). In addition, the error counters are frozen. Listen only mode supports applications which require "hot plugging" or throughput analysis. The MSCAN is unable to transmit any messages when listen only mode is active.<br>0 Normal operation<br>1 Listen only mode activated |
| 2<br>WUPM | **Wake-Up Mode** — If WUPE in CANCTL0 is enabled, this bit defines whether the integrated low-pass filter is applied to protect the MSCAN from spurious wake-up (see Section 10.4.5.4, "MSCAN Sleep Mode").<br>0 MSCAN wakes up on any dominant level on the CAN bus<br>1 MSCAN wakes up only in case of a dominant pulse on the CAN bus that has a length of $T_{wup}$ |

**Table 10-2. CANCTL1 Register Field Descriptions (continued)**

| Field | Description |
|---|---|
| 1<br>SLPAK | **Sleep Mode Acknowledge** — This flag indicates whether the MSCAN module has entered sleep mode (see Section 10.4.5.4, "MSCAN Sleep Mode"). It is used as a handshake flag for the SLPRQ sleep mode request. Sleep mode is active when SLPRQ = 1 and SLPAK = 1. Depending on the setting of WUPE, the MSCAN will clear the flag if it detects activity on the CAN bus while in sleep mode.<br>0 Running — The MSCAN operates normally<br>1 Sleep mode active — The MSCAN has entered sleep mode |
| 0<br>INITAK | **Initialization Mode Acknowledge** — This flag indicates whether the MSCAN module is in initialization mode (see Section 10.4.5.5, "MSCAN Initialization Mode"). It is used as a handshake flag for the INITRQ initialization mode request. Initialization mode is active when INITRQ = 1 and INITAK = 1. The registers CANCTL1, CANBTR0, CANBTR1, CANIDAC, CANIDAR0–CANIDAR7, and CANIDMR0–CANIDMR7 can be written only by the CPU when the MSCAN is in initialization mode.<br>0 Running — The MSCAN operates normally<br>1 Initialization mode active — The MSCAN has entered initialization mode |

### 10.3.2.3 MSCAN Bus Timing Register 0 (CANBTR0)

The CANBTR0 register configures various CAN bus timing parameters of the MSCAN module.

Module Base + 0x0002

| | 7 | 6 | 5 | 4 | 3 | 2 | 1 | 0 |
|---|---|---|---|---|---|---|---|---|
| R/W | SJW1 | SJW0 | BRP5 | BRP4 | BRP3 | BRP2 | BRP1 | BRP0 |
| Reset: | 0 | 0 | 0 | 0 | 0 | 0 | 0 | 0 |

**Figure 10-6. MSCAN Bus Timing Register 0 (CANBTR0)**

Read: Anytime
Write: Anytime in initialization mode (INITRQ = 1 and INITAK = 1)

**Table 10-3. CANBTR0 Register Field Descriptions**

| Field | Description |
|---|---|
| 7:6<br>SJW[1:0] | **Synchronization Jump Width** — The synchronization jump width defines the maximum number of time quanta (Tq) clock cycles a bit can be shortened or lengthened to achieve resynchronization to data transitions on the CAN bus (see Table 10-4). |
| 5:0<br>BRP[5:0] | **Baud Rate Prescaler** — These bits determine the time quanta (Tq) clock which is used to build up the bit timing (see Table 10-5). |

**Table 10-4. Synchronization Jump Width**

| SJW1 | SJW0 | Synchronization Jump Width |
|---|---|---|
| 0 | 0 | 1 Tq clock cycle |
| 0 | 1 | 2 Tq clock cycles |
| 1 | 0 | 3 Tq clock cycles |
| 1 | 1 | 4 Tq clock cycles |

**Table 10-5. Baud Rate Prescaler**

| BRP5 | BRP4 | BRP3 | BRP2 | BRP1 | BRP0 | Prescaler value (P) |
|---|---|---|---|---|---|---|
| 0 | 0 | 0 | 0 | 0 | 0 | 1 |
| 0 | 0 | 0 | 0 | 0 | 1 | 2 |
| 0 | 0 | 0 | 0 | 1 | 0 | 3 |
| 0 | 0 | 0 | 0 | 1 | 1 | 4 |
| : | : | : | : | : | : | : |
| 1 | 1 | 1 | 1 | 1 | 1 | 64 |

### 10.3.2.4 MSCAN Bus Timing Register 1 (CANBTR1)

The CANBTR1 register configures various CAN bus timing parameters of the MSCAN module.

Module Base + 0x0003

| | 7 | 6 | 5 | 4 | 3 | 2 | 1 | 0 |
|---|---|---|---|---|---|---|---|---|
| R/W | SAMP | TSEG22 | TSEG21 | TSEG20 | TSEG13 | TSEG12 | TSEG11 | TSEG10 |
| Reset: | 0 | 0 | 0 | 0 | 0 | 0 | 0 | 0 |

**Figure 10-7. MSCAN Bus Timing Register 1 (CANBTR1)**

Read: Anytime
Write: Anytime in initialization mode (INITRQ = 1 and INITAK = 1)

**Table 10-6. CANBTR1 Register Field Descriptions**

| Field | Description |
|---|---|
| 7<br>SAMP | **Sampling** — This bit determines the number of CAN bus samples taken per bit time.<br>0 One sample per bit.<br>1 Three samples per bit[1].<br>If SAMP = 0, the resulting bit value is equal to the value of the single bit positioned at the sample point. If SAMP = 1, the resulting bit value is determined by using majority rule on the three total samples. For higher bit rates, it is recommended that only one sample is taken per bit time (SAMP = 0). |
| 6:4<br>TSEG2[2:0] | **Time Segment 2** — Time segments within the bit time fix the number of clock cycles per bit time and the location of the sample point (see Figure 10-43). Time segment 2 (TSEG2) values are programmable as shown in Table 10-7. |
| 3:0<br>TSEG1[3:0] | **Time Segment 1** — Time segments within the bit time fix the number of clock cycles per bit time and the location of the sample point (see Figure 10-43). Time segment 1 (TSEG1) values are programmable as shown in Table 10-8. |

1. In this case, PHASE_SEG1 must be at least 2 time quanta (Tq).

**Table 10-7. Time Segment 2 Values**

| TSEG22 | TSEG21 | TSEG20 | Time Segment 2 |
|---|---|---|---|
| 0 | 0 | 0 | 1 Tq clock cycle[1] |
| 0 | 0 | 1 | 2 Tq clock cycles |
| : | : | : | : |
| 1 | 1 | 0 | 7 Tq clock cycles |
| 1 | 1 | 1 | 8 Tq clock cycles |

1. This setting is not valid. Please refer to Table 10-34 for valid settings.

**Table 10-8. Time Segment 1 Values**

| TSEG13 | TSEG12 | TSEG11 | TSEG10 | Time segment 1 |
|---|---|---|---|---|
| 0 | 0 | 0 | 0 | 1 Tq clock cycle[1] |
| 0 | 0 | 0 | 1 | 2 Tq clock cycles[1] |
| 0 | 0 | 1 | 0 | 3 Tq clock cycles[1] |
| 0 | 0 | 1 | 1 | 4 Tq clock cycles |
| : | : | : | : | : |
| 1 | 1 | 1 | 0 | 15 Tq clock cycles |
| 1 | 1 | 1 | 1 | 16 Tq clock cycles |

1. This setting is not valid. Please refer to Table 10-34 for valid settings.

The bit time is determined by the oscillator frequency, the baud rate prescaler, and the number of time quanta (Tq) clock cycles per bit (as shown in Table 10-7 and Table 10-8).

***Eqn. 10-1***

$$\text{Bit Time} = \frac{(\text{Prescaler value})}{f_{CANCLK}} \bullet (1 + \text{TimeSegment1} + \text{TimeSegment2})$$

### 10.3.2.5 MSCAN Receiver Flag Register (CANRFLG)

A flag can be cleared only by software (writing a 1 to the corresponding bit position) when the condition which caused the setting is no longer valid. Every flag has an associated interrupt enable bit in the CANRIER register.

Module Base + 0x0004

| | 7 | 6 | 5 | 4 | 3 | 2 | 1 | 0 |
|---|---|---|---|---|---|---|---|---|
| R | WUPIF | CSCIF | RSTAT1 | RSTAT0 | TSTAT1 | TSTAT0 | OVRIF | RXF |
| W | | | | | | | | |
| Reset: | 0 | 0 | 0 | 0 | 0 | 0 | 0 | 0 |

= Unimplemented

**Figure 10-8. MSCAN Receiver Flag Register (CANRFLG)**

**NOTE**

The CANRFLG register is held in the reset state[1] when the initialization mode is active (INITRQ = 1 and INITAK = 1). This register is writable again as soon as the initialization mode is exited (INITRQ = 0 and INITAK = 0).

Read: Anytime
Write: Anytime when out of initialization mode, except RSTAT[1:0] and TSTAT[1:0] flags which are read-only; write of 1 clears flag; write of 0 is ignored.

1. The RSTAT[1:0], TSTAT[1:0] bits are not affected by initialization mode.

**Table 10-9. CANRFLG Register Field Descriptions**

| Field | Description |
|---|---|
| 7<br>WUPIF | **Wake-Up Interrupt Flag** — If the MSCAN detects CAN bus activity while in sleep mode (see Section 10.4.5.4, "MSCAN Sleep Mode,") and WUPE = 1 in CANTCTL0 (see Section 10.3.2.1, "MSCAN Control Register 0 (CANCTL0)"), the module will set WUPIF. If not masked, a wake-up interrupt is pending while this flag is set.<br>0 No wake-up activity observed while in sleep mode<br>1 MSCAN detected activity on the CAN bus and requested wake-up |
| 6<br>CSCIF | **CAN Status Change Interrupt Flag** — This flag is set when the MSCAN changes its current CAN bus status due to the actual value of the transmit error counter (TEC) and the receive error counter (REC). An additional 4-bit (RSTAT[1:0], TSTAT[1:0]) status register, which is split into separate sections for TEC/REC, informs the system on the actual CAN bus status (see Section 10.3.2.6, "MSCAN Receiver Interrupt Enable Register (CANRIER)"). If not masked, an error interrupt is pending while this flag is set. CSCIF provides a blocking interrupt. That guarantees that the receiver/transmitter status bits (RSTAT/TSTAT) are only updated when no CAN status change interrupt is pending. If the TECs/RECs change their current value after the CSCIF is asserted, which would cause an additional state change in the RSTAT/TSTAT bits, these bits keep their status until the current CSCIF interrupt is cleared again.<br>0 No change in CAN bus status occurred since last interrupt<br>1 MSCAN changed current CAN bus status |
| 5:4<br>RSTAT[1:0] | **Receiver Status Bits** — The values of the error counters control the actual CAN bus status of the MSCAN. As soon as the status change interrupt flag (CSCIF) is set, these bits indicate the appropriate receiver related CAN bus status of the MSCAN. The coding for the bits RSTAT1, RSTAT0 is:<br>00 RxOK: 0 ≤ receive error counter ≤ 96<br>01 RxWRN: 96 < receive error counter ≤ 127<br>10 RxERR: 127 < receive error counter<br>11 Bus-off[1]: transmit error counter > 255 |
| 3:2<br>TSTAT[1:0] | **Transmitter Status Bits** — The values of the error counters control the actual CAN bus status of the MSCAN. As soon as the status change interrupt flag (CSCIF) is set, these bits indicate the appropriate transmitter related CAN bus status of the MSCAN. The coding for the bits TSTAT1, TSTAT0 is:<br>00 TxOK: 0 ≤ transmit error counter ≤ 96<br>01 TxWRN: 96 < transmit error counter ≤ 127<br>10 TxERR: 127 < transmit error counter ≤ 255<br>11 Bus-Off: transmit error counter > 255 |
| 1<br>OVRIF | **Overrun Interrupt Flag** — This flag is set when a data overrun condition occurs. If not masked, an error interrupt is pending while this flag is set.<br>0 No data overrun condition<br>1 A data overrun detected |
| 0<br>RXF[2] | **Receive Buffer Full Flag** — RXF is set by the MSCAN when a new message is shifted in the receiver FIFO. This flag indicates whether the shifted buffer is loaded with a correctly received message (matching identifier, matching cyclic redundancy code (CRC) and no other errors detected). After the CPU has read that message from the RxFG buffer in the receiver FIFO, the RXF flag must be cleared to release the buffer. A set RXF flag prohibits the shifting of the next FIFO entry into the foreground buffer (RxFG). If not masked, a receive interrupt is pending while this flag is set.<br>0 No new message available within the RxFG<br>1 The receiver FIFO is not empty. A new message is available in the RxFG |

1. Redundant information for the most critical CAN bus status which is "bus-off". This only occurs if the Tx error counter exceeds a number of 255 errors. Bus-off affects the receiver state. As soon as the transmitter leaves its bus-off state the receiver state skips to RxOK too. Refer also to TSTAT[1:0] coding in this register.
2. To ensure data integrity, do not read the receive buffer registers while the RXF flag is cleared. For MCUs with dual CPUs, reading the receive buffer registers while the RXF flag is cleared may result in a CPU fault condition.

### 10.3.2.6 MSCAN Receiver Interrupt Enable Register (CANRIER)

This register contains the interrupt enable bits for the interrupt flags described in the CANRFLG register.

Module Base + 0x0005

| | 7 | 6 | 5 | 4 | 3 | 2 | 1 | 0 |
|---|---|---|---|---|---|---|---|---|
| R<br>W | WUPIE | CSCIE | RSTATE1 | RSTATE0 | TSTATE1 | TSTATE0 | OVRIE | RXFIE |
| Reset: | 0 | 0 | 0 | 0 | 0 | 0 | 0 | 0 |

**Figure 10-9. MSCAN Receiver Interrupt Enable Register (CANRIER)**

**NOTE**

The CANRIER register is held in the reset state when the initialization mode is active (INITRQ=1 and INITAK=1). This register is writable when not in initialization mode (INITRQ=0 and INITAK=0).

The RSTATE[1:0], TSTATE[1:0] bits are not affected by initialization mode.

Read: Anytime
Write: Anytime when not in initialization mode

**Table 10-10. CANRIER Register Field Descriptions**

| Field | Description |
|---|---|
| 7<br>WUPIE[(1)] | **Wake-Up Interrupt Enable**<br>0 No interrupt request is generated from this event.<br>1 A wake-up event causes a Wake-Up interrupt request. |
| 6<br>CSCIE | **CAN Status Change Interrupt Enable**<br>0 No interrupt request is generated from this event.<br>1 A CAN Status Change event causes an error interrupt request. |
| 5:4<br>RSTATE[1:0] | **Receiver Status Change Enable** — These RSTAT enable bits control the sensitivity level in which receiver state changes are causing CSCIF interrupts. Independent of the chosen sensitivity level the RSTAT flags continue to indicate the actual receiver state and are only updated if no CSCIF interrupt is pending.<br>00 Do not generate any CSCIF interrupt caused by receiver state changes.<br>01 Generate CSCIF interrupt only if the receiver enters or leaves "bus-off" state. Discard other receiver state changes for generating CSCIF interrupt.<br>10 Generate CSCIF interrupt only if the receiver enters or leaves "RxErr" or "bus-off"[(2)] state. Discard other receiver state changes for generating CSCIF interrupt.<br>11 Generate CSCIF interrupt on all state changes. |
| 3:2<br>TSTATE[1:0] | **Transmitter Status Change Enable** — These TSTAT enable bits control the sensitivity level in which transmitter state changes are causing CSCIF interrupts. Independent of the chosen sensitivity level, the TSTAT flags continue to indicate the actual transmitter state and are only updated if no CSCIF interrupt is pending.<br>00 Do not generate any CSCIF interrupt caused by transmitter state changes.<br>01 Generate CSCIF interrupt only if the transmitter enters or leaves "bus-off" state. Discard other transmitter state changes for generating CSCIF interrupt.<br>10 Generate CSCIF interrupt only if the transmitter enters or leaves "TxErr" or "bus-off" state. Discard other transmitter state changes for generating CSCIF interrupt.<br>11 Generate CSCIF interrupt on all state changes. |

**Table 10-10. CANRIER Register Field Descriptions (continued)**

| Field | Description |
|---|---|
| 1<br>OVRIE | **Overrun Interrupt Enable**<br>0 No interrupt request is generated from this event.<br>1 An overrun event causes an error interrupt request. |
| 0<br>RXFIE | **Receiver Full Interrupt Enable**<br>0 No interrupt request is generated from this event.<br>1 A receive buffer full (successful message reception) event causes a receiver interrupt request. |

1. WUPIE and WUPE (see Section 10.3.2.1, "MSCAN Control Register 0 (CANCTL0)") must both be enabled if the recovery mechanism from stop or wait is required.
2. Bus-off state is defined by the CAN standard (see Bosch CAN 2.0A/B protocol specification: for only transmitters. Because the only possible state change for the transmitter from bus-off to TxOK also forces the receiver to skip its current state to RxOK, the coding of the RXSTAT[1:0] flags define an additional bus-off state for the receiver (see Section 10.3.2.5, "MSCAN Receiver Flag Register (CANRFLG)").

### 10.3.2.7 MSCAN Transmitter Flag Register (CANTFLG)

The transmit buffer empty flags each have an associated interrupt enable bit in the CANTIER register.

Module Base + 0x0006

| | 7 | 6 | 5 | 4 | 3 | 2 | 1 | 0 |
|---|---|---|---|---|---|---|---|---|
| R | 0 | 0 | 0 | 0 | 0 | TXE2 | TXE1 | TXE0 |
| W | | | | | | | | |
| Reset: | 0 | 0 | 0 | 0 | 0 | 1 | 1 | 1 |

= Unimplemented

**Figure 10-10. MSCAN Transmitter Flag Register (CANTFLG)**

**NOTE**

The CANTFLG register is held in the reset state when the initialization mode is active (INITRQ = 1 and INITAK = 1). This register is writable when not in initialization mode (INITRQ = 0 and INITAK = 0).

Read: Anytime
Write: Anytime for TXEx flags when not in initialization mode; write of 1 clears flag, write of 0 is ignored

**Table 10-11. CANTFLG Register Field Descriptions**

| Field | Description |
|---|---|
| 2:0<br>TXE[2:0] | **Transmitter Buffer Empty** — This flag indicates that the associated transmit message buffer is empty, and thus not scheduled for transmission. The CPU must clear the flag after a message is set up in the transmit buffer and is due for transmission. The MSCAN sets the flag after the message is sent successfully. The flag is also set by the MSCAN when the transmission request is successfully aborted due to a pending abort request (see Section 10.3.2.9, "MSCAN Transmitter Message Abort Request Register (CANTARQ)"). If not masked, a transmit interrupt is pending while this flag is set.<br>Clearing a TXEx flag also clears the corresponding ABTAKx (see Section 10.3.2.10, "MSCAN Transmitter Message Abort Acknowledge Register (CANTAAK)"). When a TXEx flag is set, the corresponding ABTRQx bit is cleared (see Section 10.3.2.9, "MSCAN Transmitter Message Abort Request Register (CANTARQ)").<br>When listen-mode is active (see Section 10.3.2.2, "MSCAN Control Register 1 (CANCTL1)") the TXEx flags cannot be cleared and no transmission is started.<br>Read and write accesses to the transmit buffer will be blocked, if the corresponding TXEx bit is cleared (TXEx = 0) and the buffer is scheduled for transmission.<br>0 The associated message buffer is full (loaded with a message due for transmission)<br>1 The associated message buffer is empty (not scheduled) |

### 10.3.2.8 MSCAN Transmitter Interrupt Enable Register (CANTIER)

This register contains the interrupt enable bits for the transmit buffer empty interrupt flags.

Module Base + 0x0007

| | 7 | 6 | 5 | 4 | 3 | 2 | 1 | 0 |
|---|---|---|---|---|---|---|---|---|
| R | 0 | 0 | 0 | 0 | 0 | TXEIE2 | TXEIE1 | TXEIE0 |
| W | | | | | | | | |
| Reset: | 0 | 0 | 0 | 0 | 0 | 0 | 0 | 0 |

= Unimplemented

**Figure 10-11. MSCAN Transmitter Interrupt Enable Register (CANTIER)**

**NOTE**

The CANTIER register is held in the reset state when the initialization mode is active (INITRQ = 1 and INITAK = 1). This register is writable when not in initialization mode (INITRQ = 0 and INITAK = 0).

Read: Anytime
Write: Anytime when not in initialization mode

**Table 10-12. CANTIER Register Field Descriptions**

| Field | Description |
|---|---|
| 2:0<br>TXEIE[2:0] | **Transmitter Empty Interrupt Enable**<br>0 No interrupt request is generated from this event.<br>1 A transmitter empty (transmit buffer available for transmission) event causes a transmitter empty interrupt request. |

### 10.3.2.9 MSCAN Transmitter Message Abort Request Register (CANTARQ)

The CANTARQ register allows abort request of queued messages as described below.

Module Base + 0x0008

| | 7 | 6 | 5 | 4 | 3 | 2 | 1 | 0 |
|---|---|---|---|---|---|---|---|---|
| R | 0 | 0 | 0 | 0 | 0 | ABTRQ2 | ABTRQ1 | ABTRQ0 |
| W | | | | | | | | |
| Reset: | 0 | 0 | 0 | 0 | 0 | 0 | 0 | 0 |

= Unimplemented

**Figure 10-12. MSCAN Transmitter Message Abort Request Register (CANTARQ)**

**NOTE**

The CANTARQ register is held in the reset state when the initialization mode is active (INITRQ = 1 and INITAK = 1). This register is writable when not in initialization mode (INITRQ = 0 and INITAK = 0).

Read: Anytime
Write: Anytime when not in initialization mode

**Table 10-13. CANTARQ Register Field Descriptions**

| Field | Description |
|---|---|
| 2:0<br>ABTRQ[2:0] | **Abort Request** — The CPU sets the ABTRQx bit to request that a scheduled message buffer (TXEx = 0) be aborted. The MSCAN grants the request if the message has not already started transmission, or if the transmission is not successful (lost arbitration or error). When a message is aborted, the associated TXE (see Section 10.3.2.7, "MSCAN Transmitter Flag Register (CANTFLG)") and abort acknowledge flags (ABTAK, see Section 10.3.2.10, "MSCAN Transmitter Message Abort Acknowledge Register (CANTAAK)") are set and a transmit interrupt occurs if enabled. The CPU cannot reset ABTRQx. ABTRQx is reset whenever the associated TXE flag is set.<br>0 No abort request<br>1 Abort request pending |

### 10.3.2.10 MSCAN Transmitter Message Abort Acknowledge Register (CANTAAK)

The CANTAAK register indicates the successful abort of a queued message, if requested by the appropriate bits in the CANTARQ register.

Module Base + 0x0009

| | 7 | 6 | 5 | 4 | 3 | 2 | 1 | 0 |
|---|---|---|---|---|---|---|---|---|
| R | 0 | 0 | 0 | 0 | 0 | ABTAK2 | ABTAK1 | ABTAK0 |
| W | | | | | | | | |
| Reset: | 0 | 0 | 0 | 0 | 0 | 0 | 0 | 0 |

= Unimplemented

**Figure 10-13. MSCAN Transmitter Message Abort Acknowledge Register (CANTAAK)**

**NOTE**

The CANTAAK register is held in the reset state when the initialization mode is active (INITRQ = 1 and INITAK = 1).

Read: Anytime
Write: Unimplemented for ABTAKx flags

**Table 10-14. CANTAAK Register Field Descriptions**

| Field | Description |
|---|---|
| 2:0<br>ABTAK[2:0] | **Abort Acknowledge** — This flag acknowledges that a message was aborted due to a pending abort request from the CPU. After a particular message buffer is flagged empty, this flag can be used by the application software to identify whether the message was aborted successfully or was sent anyway. The ABTAKx flag is cleared whenever the corresponding TXE flag is cleared.<br>0 The message was not aborted.<br>1 The message was aborted. |

### 10.3.2.11 MSCAN Transmit Buffer Selection Register (CANTBSEL)

The CANTBSEL register allows the selection of the actual transmit message buffer, which then will be accessible in the CANTXFG register space.

Module Base + 0x000A

| | 7 | 6 | 5 | 4 | 3 | 2 | 1 | 0 |
|---|---|---|---|---|---|---|---|---|
| R | 0 | 0 | 0 | 0 | 0 | TX2 | TX1 | TX0 |
| W | | | | | | | | |
| Reset: | 0 | 0 | 0 | 0 | 0 | 0 | 0 | 0 |

= Unimplemented

**Figure 10-14. MSCAN Transmit Buffer Selection Register (CANTBSEL)**

**NOTE**

The CANTBSEL register is held in the reset state when the initialization mode is active (INITRQ = 1 and INITAK=1). This register is writable when not in initialization mode (INITRQ = 0 and INITAK = 0).

Read: Find the lowest ordered bit set to 1, all other bits will be read as 0
Write: Anytime when not in initialization mode

**Table 10-15. CANTBSEL Register Field Descriptions**

| Field | Description |
|---|---|
| 2:0<br>TX[2:0] | **Transmit Buffer Select** — The lowest numbered bit places the respective transmit buffer in the CANTXFG register space (e.g., TX1 = 1 and TX0 = 1 selects transmit buffer TX0; TX1 = 1 and TX0 = 0 selects transmit buffer TX1). Read and write accesses to the selected transmit buffer will be blocked, if the corresponding TXEx bit is cleared and the buffer is scheduled for transmission (see Section 10.3.2.7, "MSCAN Transmitter Flag Register (CANTFLG)").<br>0 The associated message buffer is deselected<br>1 The associated message buffer is selected, if lowest numbered bit |

The following gives a short programming example of the usage of the CANTBSEL register:

To get the next available transmit buffer, application software must read the CANTFLG register and write this value back into the CANTBSEL register. In this example Tx buffers TX1 and TX2 are available. The value read from CANTFLG is therefore 0b0000_0110. When writing this value back to CANTBSEL, the Tx buffer TX1 is selected in the CANTXFG because the lowest numbered bit set to 1 is at bit position 1. Reading back this value out of CANTBSEL results in 0b0000_0010, because only the lowest numbered bit position set to 1 is presented. This mechanism eases the application software the selection of the next available Tx buffer.

- LDD CANTFLG; value read is 0b0000_0110
- STD CANTBSEL; value written is 0b0000_0110
- LDD CANTBSEL; value read is 0b0000_0010

If all transmit message buffers are deselected, no accesses are allowed to the CANTXFG registers.

### 10.3.2.12 MSCAN Identifier Acceptance Control Register (CANIDAC)

The CANIDAC register is used for identifier acceptance control as described below.

Module Base + 0x000B

| | 7 | 6 | 5 | 4 | 3 | 2 | 1 | 0 |
|---|---|---|---|---|---|---|---|---|
| R | 0 | 0 | IDAM1 | IDAM0 | 0 | IDHIT2 | IDHIT1 | IDHIT0 |
| W | | | | | | | | |
| Reset: | 0 | 0 | 0 | 0 | 0 | 0 | 0 | 0 |

= Unimplemented

**Figure 10-15. MSCAN Identifier Acceptance Control Register (CANIDAC)**

Read: Anytime
Write: Anytime in initialization mode (INITRQ = 1 and INITAK = 1), except bits IDHITx, which are read-only

**Table 10-16. CANIDAC Register Field Descriptions**

| Field | Description |
|---|---|
| 5:4<br>IDAM[1:0] | **Identifier Acceptance Mode** — The CPU sets these flags to define the identifier acceptance filter organization (see Section 10.4.3, "Identifier Acceptance Filter"). Table 10-17 summarizes the different settings. In filter closed mode, no message is accepted such that the foreground buffer is never reloaded. |
| 2:0<br>IDHIT[2:0] | Identifier Acceptance Hit Indicator — The MSCAN sets these flags to indicate an identifier acceptance hit (see Section 10.4.3, "Identifier Acceptance Filter"). Table 10-18 summarizes the different settings. |

**Table 10-17. Identifier Acceptance Mode Settings**

| IDAM1 | IDAM0 | Identifier Acceptance Mode |
|---|---|---|
| 0 | 0 | Two 32-bit acceptance filters |
| 0 | 1 | Four 16-bit acceptance filters |
| 1 | 0 | Eight 8-bit acceptance filters |
| 1 | 1 | Filter closed |

**Table 10-18. Identifier Acceptance Hit Indication**

| IDHIT2 | IDHIT1 | IDHIT0 | Identifier Acceptance Hit |
|---|---|---|---|
| 0 | 0 | 0 | Filter 0 hit |
| 0 | 0 | 1 | Filter 1 hit |
| 0 | 1 | 0 | Filter 2 hit |
| 0 | 1 | 1 | Filter 3 hit |
| 1 | 0 | 0 | Filter 4 hit |
| 1 | 0 | 1 | Filter 5 hit |
| 1 | 1 | 0 | Filter 6 hit |
| 1 | 1 | 1 | Filter 7 hit |

The IDHITx indicators are always related to the message in the foreground buffer (RxFG). When a message gets shifted into the foreground buffer of the receiver FIFO the indicators are updated as well.

### 10.3.2.13 MSCAN Reserved Registers

These registers are reserved for factory testing of the MSCAN module and is not available in normal system operation modes.

Module Base + 0x000C, 0x000D

| | 7 | 6 | 5 | 4 | 3 | 2 | 1 | 0 |
|---|---|---|---|---|---|---|---|---|
| R | 0 | 0 | 0 | 0 | 0 | 0 | 0 | 0 |
| W | | | | | | | | |
| Reset: | 0 | 0 | 0 | 0 | 0 | 0 | 0 | 0 |

= Unimplemented

**Figure 10-16. MSCAN Reserved Registers**

Read: Always read 0x0000 in normal system operation modes
Write: Unimplemented in normal system operation modes

**NOTE**

Writing to this register when in special modes can alter the MSCAN functionality.

### 10.3.2.14 MSCAN Receive Error Counter (CANRXERR)

This register reflects the status of the MSCAN receive error counter.

Module Base + 0x000E

| | 7 | 6 | 5 | 4 | 3 | 2 | 1 | 0 |
|---|---|---|---|---|---|---|---|---|
| R | RXERR7 | RXERR6 | RXERR5 | RXERR4 | RXERR3 | RXERR2 | RXERR1 | RXERR0 |
| W | | | | | | | | |
| Reset: | 0 | 0 | 0 | 0 | 0 | 0 | 0 | 0 |

= Unimplemented

**Figure 10-17. MSCAN Receive Error Counter (CANRXERR)**

Read: Only when in sleep mode (SLPRQ = 1 and SLPAK = 1) or initialization mode (INITRQ = 1 and INITAK = 1)

Write: Unimplemented

**NOTE**

Reading this register when in any other mode other than sleep or initialization mode may return an incorrect value. For MCUs with dual CPUs, this may result in a CPU fault condition.

Writing to this register when in special modes can alter the MSCAN functionality.

### 10.3.2.15 MSCAN Transmit Error Counter (CANTXERR)

This register reflects the status of the MSCAN transmit error counter.

Module Base + 0x000F

| | 7 | 6 | 5 | 4 | 3 | 2 | 1 | 0 |
|---|---|---|---|---|---|---|---|---|
| R | TXERR7 | TXERR6 | TXERR5 | TXERR4 | TXERR3 | TXERR2 | TXERR1 | TXERR0 |
| W | | | | | | | | |
| Reset: | 0 | 0 | 0 | 0 | 0 | 0 | 0 | 0 |

= Unimplemented

**Figure 10-18. MSCAN Transmit Error Counter (CANTXERR)**

Read: Only when in sleep mode (SLPRQ = 1 and SLPAK = 1) or initialization mode (INITRQ = 1 and INITAK = 1)

Write: Unimplemented

**NOTE**

Reading this register when in any other mode other than sleep or initialization mode, may return an incorrect value. For MCUs with dual CPUs, this may result in a CPU fault condition.

Writing to this register when in special modes can alter the MSCAN functionality.

### 10.3.2.16 MSCAN Identifier Acceptance Registers (CANIDAR0-7)

On reception, each message is written into the background receive buffer. The CPU is only signalled to read the message if it passes the criteria in the identifier acceptance and identifier mask registers (accepted); otherwise, the message is overwritten by the next message (dropped).

The acceptance registers of the MSCAN are applied on the IDR0–IDR3 registers (see Section 10.3.3.1, "Identifier Registers (IDR0–IDR3)") of incoming messages in a bit by bit manner (see Section 10.4.3, "Identifier Acceptance Filter").

For extended identifiers, all four acceptance and mask registers are applied. For standard identifiers, only the first two (CANIDAR0/1, CANIDMR0/1) are applied.

Module Base + 0x0010 (CANIDAR0)
0x0011 (CANIDAR1)
0x0012 (CANIDAR2)
0x0013 (CANIDAR3)

| | 7 | 6 | 5 | 4 | 3 | 2 | 1 | 0 |
|---|---|---|---|---|---|---|---|---|
| R/W | AC7 | AC6 | AC5 | AC4 | AC3 | AC2 | AC1 | AC0 |
| Reset | 0 | 0 | 0 | 0 | 0 | 0 | 0 | 0 |

| | 7 | 6 | 5 | 4 | 3 | 2 | 1 | 0 |
|---|---|---|---|---|---|---|---|---|
| R/W | AC7 | AC6 | AC5 | AC4 | AC3 | AC2 | AC1 | AC0 |
| Reset | 0 | 0 | 0 | 0 | 0 | 0 | 0 | 0 |

| | 7 | 6 | 5 | 4 | 3 | 2 | 1 | 0 |
|---|---|---|---|---|---|---|---|---|
| R/W | AC7 | AC6 | AC5 | AC4 | AC3 | AC2 | AC1 | AC0 |
| Reset | 0 | 0 | 0 | 0 | 0 | 0 | 0 | 0 |

| | 7 | 6 | 5 | 4 | 3 | 2 | 1 | 0 |
|---|---|---|---|---|---|---|---|---|
| R/W | AC7 | AC6 | AC5 | AC4 | AC3 | AC2 | AC1 | AC0 |
| Reset | 0 | 0 | 0 | 0 | 0 | 0 | 0 | 0 |

**Figure 10-19. MSCAN Identifier Acceptance Registers (First Bank) — CANIDAR0–CANIDAR3**

Read: Anytime

Write: Anytime in initialization mode (INITRQ = 1 and INITAK = 1)

**Table 10-19. CANIDAR0–CANIDAR3 Register Field Descriptions**

| Field | Description |
|---|---|
| 7:0<br>AC[7:0] | **Acceptance Code Bits** — AC[7:0] comprise a user-defined sequence of bits with which the corresponding bits of the related identifier register (IDRn) of the receive message buffer are compared. The result of this comparison is then masked with the corresponding identifier mask register. |

Module Base + 0x0018 (CANIDAR4)
0x0019 (CANIDAR5)
0x001A (CANIDAR6)
0x001B (CANIDAR7)

| | 7 | 6 | 5 | 4 | 3 | 2 | 1 | 0 |
|---|---|---|---|---|---|---|---|---|
| R/W | AC7 | AC6 | AC5 | AC4 | AC3 | AC2 | AC1 | AC0 |
| Reset | 0 | 0 | 0 | 0 | 0 | 0 | 0 | 0 |

| | 7 | 6 | 5 | 4 | 3 | 2 | 1 | 0 |
|---|---|---|---|---|---|---|---|---|
| R/W | AC7 | AC6 | AC5 | AC4 | AC3 | AC2 | AC1 | AC0 |
| Reset | 0 | 0 | 0 | 0 | 0 | 0 | 0 | 0 |

| | 7 | 6 | 5 | 4 | 3 | 2 | 1 | 0 |
|---|---|---|---|---|---|---|---|---|
| R/W | AC7 | AC6 | AC5 | AC4 | AC3 | AC2 | AC1 | AC0 |
| Reset | 0 | 0 | 0 | 0 | 0 | 0 | 0 | 0 |

| | 7 | 6 | 5 | 4 | 3 | 2 | 1 | 0 |
|---|---|---|---|---|---|---|---|---|
| R/W | AC7 | AC6 | AC5 | AC4 | AC3 | AC2 | AC1 | AC0 |
| Reset | 0 | 0 | 0 | 0 | 0 | 0 | 0 | 0 |

**Figure 10-20. MSCAN Identifier Acceptance Registers (Second Bank) — CANIDAR4–CANIDAR7**

Read: Anytime

Write: Anytime in initialization mode (INITRQ = 1 and INITAK = 1)

**Table 10-20. CANIDAR4–CANIDAR7 Register Field Descriptions**

| Field | Description |
|---|---|
| 7:0<br>AC[7:0] | **Acceptance Code Bits** — AC[7:0] comprise a user-defined sequence of bits with which the corresponding bits of the related identifier register (IDRn) of the receive message buffer are compared. The result of this comparison is then masked with the corresponding identifier mask register. |

### 10.3.2.17 MSCAN Identifier Mask Registers (CANIDMR0–CANIDMR7)

The identifier mask register specifies which of the corresponding bits in the identifier acceptance register are relevant for acceptance filtering. To receive standard identifiers in 32 bit filter mode, it is required to program the last three bits (AM[2:0]) in the mask registers CANIDMR1 and CANIDMR5 to "don't care." To receive standard identifiers in 16 bit filter mode, it is required to program the last three bits (AM[2:0]) in the mask registers CANIDMR1, CANIDMR3, CANIDMR5, and CANIDMR7 to "don't care."

Module Base + 0x0014 (CANIDMR0)
0x0015 (CANIDMR1)
0x0016 (CANIDMR2)
0x0017 (CANIDMR3)

| | 7 | 6 | 5 | 4 | 3 | 2 | 1 | 0 |
|---|---|---|---|---|---|---|---|---|
| R/W | AM7 | AM6 | AM5 | AM4 | AM3 | AM2 | AM1 | AM0 |
| Reset | 0 | 0 | 0 | 0 | 0 | 0 | 0 | 0 |

| | 7 | 6 | 5 | 4 | 3 | 2 | 1 | 0 |
|---|---|---|---|---|---|---|---|---|
| R/W | AM7 | AM6 | AM5 | AM4 | AM3 | AM2 | AM1 | AM0 |
| Reset | 0 | 0 | 0 | 0 | 0 | 0 | 0 | 0 |

| | 7 | 6 | 5 | 4 | 3 | 2 | 1 | 0 |
|---|---|---|---|---|---|---|---|---|
| R/W | AM7 | AM6 | AM5 | AM4 | AM3 | AM2 | AM1 | AM0 |
| Reset | 0 | 0 | 0 | 0 | 0 | 0 | 0 | 0 |

| | 7 | 6 | 5 | 4 | 3 | 2 | 1 | 0 |
|---|---|---|---|---|---|---|---|---|
| R/W | AM7 | AM6 | AM5 | AM4 | AM3 | AM2 | AM1 | AM0 |
| Reset | 0 | 0 | 0 | 0 | 0 | 0 | 0 | 0 |

**Figure 10-21. MSCAN Identifier Mask Registers (First Bank) — CANIDMR0–CANIDMR3**

Read: Anytime
Write: Anytime in initialization mode (INITRQ = 1 and INITAK = 1)

**Table 10-21. CANIDMR0–CANIDMR3 Register Field Descriptions**

| Field | Description |
|---|---|
| 7:0<br>AM[7:0] | **Acceptance Mask Bits** — If a particular bit in this register is cleared, this indicates that the corresponding bit in the identifier acceptance register must be the same as its identifier bit before a match is detected. The message is accepted if all such bits match. If a bit is set, it indicates that the state of the corresponding bit in the identifier acceptance register does not affect whether or not the message is accepted.<br>0 Match corresponding acceptance code register and identifier bits<br>1 Ignore corresponding acceptance code register bit |

Module Base + 0x001C (CANIDMR4)
0x001D (CANIDMR5)
0x001E (CANIDMR6)
0x001F (CANIDMR7)

| | 7 | 6 | 5 | 4 | 3 | 2 | 1 | 0 |
|---|---|---|---|---|---|---|---|---|
| R/W | AM7 | AM6 | AM5 | AM4 | AM3 | AM2 | AM1 | AM0 |
| Reset | 0 | 0 | 0 | 0 | 0 | 0 | 0 | 0 |

| | 7 | 6 | 5 | 4 | 3 | 2 | 1 | 0 |
|---|---|---|---|---|---|---|---|---|
| R/W | AM7 | AM6 | AM5 | AM4 | AM3 | AM2 | AM1 | AM0 |
| Reset | 0 | 0 | 0 | 0 | 0 | 0 | 0 | 0 |

| | 7 | 6 | 5 | 4 | 3 | 2 | 1 | 0 |
|---|---|---|---|---|---|---|---|---|
| R/W | AM7 | AM6 | AM5 | AM4 | AM3 | AM2 | AM1 | AM0 |
| Reset | 0 | 0 | 0 | 0 | 0 | 0 | 0 | 0 |

| | 7 | 6 | 5 | 4 | 3 | 2 | 1 | 0 |
|---|---|---|---|---|---|---|---|---|
| R/W | AM7 | AM6 | AM5 | AM4 | AM3 | AM2 | AM1 | AM0 |
| Reset | 0 | 0 | 0 | 0 | 0 | 0 | 0 | 0 |

**Figure 10-22. MSCAN Identifier Mask Registers (Second Bank) — CANIDMR4–CANIDMR7**

Read: Anytime
Write: Anytime in initialization mode (INITRQ = 1 and INITAK = 1)

**Table 10-22. CANIDMR4–CANIDMR7 Register Field Descriptions**

| Field | Description |
|---|---|
| 7:0<br>AM[7:0] | **Acceptance Mask Bits** — If a particular bit in this register is cleared, this indicates that the corresponding bit in the identifier acceptance register must be the same as its identifier bit before a match is detected. The message is accepted if all such bits match. If a bit is set, it indicates that the state of the corresponding bit in the identifier acceptance register does not affect whether or not the message is accepted.<br>0 Match corresponding acceptance code register and identifier bits<br>1 Ignore corresponding acceptance code register bit |

### 10.3.3 Programmer's Model of Message Storage

The following section details the organization of the receive and transmit message buffers and the associated control registers.

To simplify the programmer interface, the receive and transmit message buffers have the same outline. Each message buffer allocates 16 bytes in the memory map containing a 13 byte data structure.

An additional transmit buffer priority register (TBPR) is defined for the transmit buffers. Within the last two bytes of this memory map, the MSCAN stores a special 16-bit time stamp, which is sampled from an internal timer after successful transmission or reception of a message. This feature is only available for transmit and receiver buffers, if the TIME bit is set (see Section 10.3.2.1, "MSCAN Control Register 0 (CANCTL0)").

The time stamp register is written by the MSCAN. The CPU can only read these registers.

**Table 10-23. Message Buffer Organization**

| Offset Address | Register | Access |
|---|---|---|
| 0x00X0 | Identifier Register 0 | |
| 0x00X1 | Identifier Register 1 | |
| 0x00X2 | Identifier Register 2 | |
| 0x00X3 | Identifier Register 3 | |
| 0x00X4 | Data Segment Register 0 | |
| 0x00X5 | Data Segment Register 1 | |
| 0x00X6 | Data Segment Register 2 | |
| 0x00X7 | Data Segment Register 3 | |
| 0x00X8 | Data Segment Register 4 | |
| 0x00X9 | Data Segment Register 5 | |
| 0x00XA | Data Segment Register 6 | |
| 0x00XB | Data Segment Register 7 | |
| 0x00XC | Data Length Register | |
| 0x00XD | Transmit Buffer Priority Register(1) | |
| 0x00XE | Time Stamp Register (High Byte)(2) | |
| 0x00XF | Time Stamp Register (Low Byte)(3) | |

1. Not applicable for receive buffers
2. Read-only for CPU
3. Read-only for CPU

Figure 10-23 shows the common 13-byte data structure of receive and transmit buffers for extended identifiers. The mapping of standard identifiers into the IDR registers is shown in Figure 10-24.

All bits of the receive and transmit buffers are 'x' out of reset because of RAM-based implementation[1]. All reserved or unused bits of the receive and transmit buffers always read 'x'.

1. Exception: The transmit priority registers are 0 out of reset.

| Register Name | | Bit 7 | 6 | 5 | 4 | 3 | 2 | 1 | Bit0 |
|---|---|---|---|---|---|---|---|---|---|
| 0x00X0 IDR0 | R/W | ID28 | ID27 | ID26 | ID25 | ID24 | ID23 | ID22 | ID21 |
| 0x00X1 IDR1 | R/W | ID20 | ID19 | ID18 | SRR (=1) | IDE (=1) | ID17 | ID16 | ID15 |
| 0x00X2 IDR2 | R/W | ID14 | ID13 | ID12 | ID11 | ID10 | ID9 | ID8 | ID7 |
| 0x00X3 IDR3 | R/W | ID6 | ID5 | ID4 | ID3 | ID2 | ID1 | ID0 | RTR |
| 0x00X4 DSR0 | R/W | DB7 | DB6 | DB5 | DB4 | DB3 | DB2 | DB1 | DB0 |
| 0x00X5 DSR1 | R/W | DB7 | DB6 | DB5 | DB4 | DB3 | DB2 | DB1 | DB0 |
| 0x00X6 DSR2 | R/W | DB7 | DB6 | DB5 | DB4 | DB3 | DB2 | DB1 | DB0 |
| 0x00X7 DSR3 | R/W | DB7 | DB6 | DB5 | DB4 | DB3 | DB2 | DB1 | DB0 |
| 0x00X8 DSR4 | R/W | DB7 | DB6 | DB5 | DB4 | DB3 | DB2 | DB1 | DB0 |
| 0x00X9 DSR5 | R/W | DB7 | DB6 | DB5 | DB4 | DB3 | DB2 | DB1 | DB0 |
| 0x00XA DSR6 | R/W | DB7 | DB6 | DB5 | DB4 | DB3 | DB2 | DB1 | DB0 |
| 0x00XB DSR7 | R/W | DB7 | DB6 | DB5 | DB4 | DB3 | DB2 | DB1 | DB0 |
| 0x00XC DLR | R/W | | | | | DLC3 | DLC2 | DLC1 | DLC0 |

= Unused, always read 'x'

**Figure 10-23. Receive/Transmit Message Buffer — Extended Identifier Mapping**

Read: For transmit buffers, anytime when TXEx flag is set (see Section 10.3.2.7, "MSCAN Transmitter Flag Register (CANTFLG)") and the corresponding transmit buffer is selected in CANTBSEL (see Section 10.3.2.11, "MSCAN Transmit Buffer Selection Register (CANTBSEL)"). For receive buffers, only when RXF flag is set (see Section 10.3.2.5, "MSCAN Receiver Flag Register (CANRFLG)").

Write: For transmit buffers, anytime when TXEx flag is set (see Section 10.3.2.7, "MSCAN Transmitter Flag Register (CANTFLG)") and the corresponding transmit buffer is selected in CANTBSEL (see Section 10.3.2.11, "MSCAN Transmit Buffer Selection Register (CANTBSEL)"). Unimplemented for receive buffers.

Reset: Undefined (0x00XX) because of RAM-based implementation

| Register Name | | Bit 7 | 6 | 5 | 4 | 3 | 2 | 1 | Bit 0 |
|---|---|---|---|---|---|---|---|---|---|
| IDR0 0x00X0 | R/W | ID10 | ID9 | ID8 | ID7 | ID6 | ID5 | ID4 | ID3 |
| IDR1 0x00X1 | R/W | ID2 | ID1 | ID0 | RTR | IDE (=0) | | | |
| IDR2 0x00X2 | R/W | | | | | | | | |
| IDR3 0x00X3 | R/W | | | | | | | | |

= Unused, always read 'x'

**Figure 10-24. Receive/Transmit Message Buffer — Standard Identifier Mapping**

### 10.3.3.1 Identifier Registers (IDR0–IDR3)

The identifier registers for an extended format identifier consist of a total of 32 bits; ID[28:0], SRR, IDE, and RTR bits. The identifier registers for a standard format identifier consist of a total of 13 bits; ID[10:0], RTR, and IDE bits.

#### 10.3.3.1.1 IDR0–IDR3 for Extended Identifier Mapping

Module Base + 0x00X1

| | 7 | 6 | 5 | 4 | 3 | 2 | 1 | 0 |
|---|---|---|---|---|---|---|---|---|
| R/W | ID28 | ID27 | ID26 | ID25 | ID24 | ID23 | ID22 | ID21 |
| Reset: | x | x | x | x | x | x | x | x |

**Figure 10-25. Identifier Register 0 (IDR0) — Extended Identifier Mapping**

**Table 10-24. IDR0 Register Field Descriptions — Extended**

| Field | Description |
|---|---|
| 7:0 ID[28:21] | **Extended Format Identifier —** The identifiers consist of 29 bits (ID[28:0]) for the extended format. ID28 is the most significant bit and is transmitted first on the CAN bus during the arbitration procedure. The priority of an identifier is defined to be highest for the smallest binary number. |

Module Base + 0x00X1

| | 7 | 6 | 5 | 4 | 3 | 2 | 1 | 0 |
|---|---|---|---|---|---|---|---|---|
| R<br>W | ID20 | ID19 | ID18 | SRR (=1) | IDE (=1) | ID17 | ID16 | ID15 |
| Reset: | x | x | x | x | x | x | x | x |

**Figure 10-26. Identifier Register 1 (IDR1) — Extended Identifier Mapping**

**Table 10-25. IDR1 Register Field Descriptions — Extended**

| Field | Description |
|---|---|
| 7:5<br>ID[20:18] | **Extended Format Identifier —** The identifiers consist of 29 bits (ID[28:0]) for the extended format. ID28 is the most significant bit and is transmitted first on the CAN bus during the arbitration procedure. The priority of an identifier is defined to be highest for the smallest binary number. |
| 4<br>SRR | **Substitute Remote Request** — This fixed recessive bit is used only in extended format. It must be set to 1 by the user for transmission buffers and is stored as received on the CAN bus for receive buffers. |
| 3<br>IDE | **ID Extended** — This flag indicates whether the extended or standard identifier format is applied in this buffer. In the case of a receive buffer, the flag is set as received and indicates to the CPU how to process the buffer identifier registers. In the case of a transmit buffer, the flag indicates to the MSCAN what type of identifier to send.<br>0 Standard format (11 bit)<br>1 Extended format (29 bit) |
| 2:0<br>ID[17:15] | **Extended Format Identifier —** The identifiers consist of 29 bits (ID[28:0]) for the extended format. ID28 is the most significant bit and is transmitted first on the CAN bus during the arbitration procedure. The priority of an identifier is defined to be highest for the smallest binary number. |

Module Base + 0x00X2

| | 7 | 6 | 5 | 4 | 3 | 2 | 1 | 0 |
|---|---|---|---|---|---|---|---|---|
| R<br>W | ID14 | ID13 | ID12 | ID11 | ID10 | ID9 | ID8 | ID7 |
| Reset: | x | x | x | x | x | x | x | x |

**Figure 10-27. Identifier Register 2 (IDR2) — Extended Identifier Mapping**

**Table 10-26. IDR2 Register Field Descriptions — Extended**

| Field | Description |
|---|---|
| 7:0<br>ID[14:7] | **Extended Format Identifier —** The identifiers consist of 29 bits (ID[28:0]) for the extended format. ID28 is the most significant bit and is transmitted first on the CAN bus during the arbitration procedure. The priority of an identifier is defined to be highest for the smallest binary number. |

Module Base + 0x00X3

| | 7 | 6 | 5 | 4 | 3 | 2 | 1 | 0 |
|---|---|---|---|---|---|---|---|---|
| R<br>W | ID6 | ID5 | ID4 | ID3 | ID2 | ID1 | ID0 | RTR |
| Reset: | x | x | x | x | x | x | x | x |

**Figure 10-28. Identifier Register 3 (IDR3) — Extended Identifier Mapping**

**Table 10-27. IDR3 Register Field Descriptions — Extended**

| Field | Description |
|---|---|
| 7:1<br>ID[6:0] | **Extended Format Identifier —** The identifiers consist of 29 bits (ID[28:0]) for the extended format. ID28 is the most significant bit and is transmitted first on the CAN bus during the arbitration procedure. The priority of an identifier is defined to be highest for the smallest binary number. |
| 0<br>RTR | **Remote Transmission Request** — This flag reflects the status of the remote transmission request bit in the CAN frame. In the case of a receive buffer, it indicates the status of the received frame and supports the transmission of an answering frame in software. In the case of a transmit buffer, this flag defines the setting of the RTR bit to be sent.<br>0 Data frame<br>1 Remote frame |

### 10.3.3.1.2 IDR0–IDR3 for Standard Identifier Mapping

Module Base + 0x00X0

| | 7 | 6 | 5 | 4 | 3 | 2 | 1 | 0 |
|---|---|---|---|---|---|---|---|---|
| R<br>W | ID10 | ID9 | ID8 | ID7 | ID6 | ID5 | ID4 | ID3 |
| Reset: | x | x | x | x | x | x | x | x |

**Figure 10-29. Identifier Register 0 — Standard Mapping**

**Table 10-28. IDR0 Register Field Descriptions — Standard**

| Field | Description |
|---|---|
| 7:0<br>ID[10:3] | **Standard Format Identifier —** The identifiers consist of 11 bits (ID[10:0]) for the standard format. ID10 is the most significant bit and is transmitted first on the CAN bus during the arbitration procedure. The priority of an identifier is defined to be highest for the smallest binary number. See also ID bits in Table 10-29. |

Module Base + 0x00X1

| | 7 | 6 | 5 | 4 | 3 | 2 | 1 | 0 |
|---|---|---|---|---|---|---|---|---|
| R<br>W | ID2 | ID1 | ID0 | RTR | IDE (=0) | | | |
| Reset: | x | x | x | x | x | x | x | x |

= Unused; always read 'x'

**Figure 10-30. Identifier Register 1 — Standard Mapping**

**Table 10-29. IDR1 Register Field Descriptions**

| Field | Description |
|---|---|
| 7:5<br>ID[2:0] | **Standard Format Identifier —** The identifiers consist of 11 bits (ID[10:0]) for the standard format. ID10 is the most significant bit and is transmitted first on the CAN bus during the arbitration procedure. The priority of an identifier is defined to be highest for the smallest binary number. See also ID bits in Table 10-28. |
| 4<br>RTR | **Remote Transmission Request** — This flag reflects the status of the Remote Transmission Request bit in the CAN frame. In the case of a receive buffer, it indicates the status of the received frame and supports the transmission of an answering frame in software. In the case of a transmit buffer, this flag defines the setting of the RTR bit to be sent.<br>0 Data frame<br>1 Remote frame |
| 3<br>IDE | **ID Extended** — This flag indicates whether the extended or standard identifier format is applied in this buffer. In the case of a receive buffer, the flag is set as received and indicates to the CPU how to process the buffer identifier registers. In the case of a transmit buffer, the flag indicates to the MSCAN what type of identifier to send.<br>0 Standard format (11 bit)<br>1 Extended format (29 bit) |

Module Base + 0x00X2

| | 7 | 6 | 5 | 4 | 3 | 2 | 1 | 0 |
|---|---|---|---|---|---|---|---|---|
| R<br>W | | | | | | | | |
| Reset: | x | x | x | x | x | x | x | x |

= Unused; always read 'x'

**Figure 10-31. Identifier Register 2 — Standard Mapping**

Module Base + 0x00X3

| | 7 | 6 | 5 | 4 | 3 | 2 | 1 | 0 |
|---|---|---|---|---|---|---|---|---|
| R<br>W | | | | | | | | |
| Reset: | x | x | x | x | x | x | x | x |

= Unused; always read 'x'

**Figure 10-32. Identifier Register 3 — Standard Mapping**

### 10.3.3.2 Data Segment Registers (DSR0-7)

The eight data segment registers, each with bits DB[7:0], contain the data to be transmitted or received. The number of bytes to be transmitted or received is determined by the data length code in the corresponding DLR register.

Module Base + 0x0004 (DSR0)
0x0005 (DSR1)
0x0006 (DSR2)
0x0007 (DSR3)
0x0008 (DSR4)
0x0009 (DSR5)
0x000A (DSR6)
0x000B (DSR7)

| | 7 | 6 | 5 | 4 | 3 | 2 | 1 | 0 |
|---|---|---|---|---|---|---|---|---|
| R<br>W | DB7 | DB6 | DB5 | DB4 | DB3 | DB2 | DB1 | DB0 |
| Reset: | x | x | x | x | x | x | x | x |

**Figure 10-33. Data Segment Registers (DSR0–DSR7) — Extended Identifier Mapping**

**Table 10-30. DSR0–DSR7 Register Field Descriptions**

| Field | Description |
|---|---|
| 7:0<br>DB[7:0] | **Data bits 7:0** |

### 10.3.3.3 Data Length Register (DLR)

This register keeps the data length field of the CAN frame.

Module Base + 0x00XB

| | 7 | 6 | 5 | 4 | 3 | 2 | 1 | 0 |
|---|---|---|---|---|---|---|---|---|
| R<br>W | | | | | DLC3 | DLC2 | DLC1 | DLC0 |
| Reset: | x | x | x | x | x | x | x | x |

= Unused; always read "x"

**Figure 10-34. Data Length Register (DLR) — Extended Identifier Mapping**

**Table 10-31. DLR Register Field Descriptions**

| Field | Description |
|---|---|
| 3:0<br>DLC[3:0] | **Data Length Code Bits** — The data length code contains the number of bytes (data byte count) of the respective message. During the transmission of a remote frame, the data length code is transmitted as programmed while the number of transmitted data bytes is always 0. The data byte count ranges from 0 to 8 for a data frame. Table 10-32 shows the effect of setting the DLC bits. |

**Table 10-32. Data Length Codes**

| Data Length Code | | | | Data Byte Count |
|---|---|---|---|---|
| DLC3 | DLC2 | DLC1 | DLC0 | |
| 0 | 0 | 0 | 0 | 0 |
| 0 | 0 | 0 | 1 | 1 |
| 0 | 0 | 1 | 0 | 2 |
| 0 | 0 | 1 | 1 | 3 |
| 0 | 1 | 0 | 0 | 4 |
| 0 | 1 | 0 | 1 | 5 |
| 0 | 1 | 1 | 0 | 6 |
| 0 | 1 | 1 | 1 | 7 |
| 1 | 0 | 0 | 0 | 8 |

### 10.3.3.4 Transmit Buffer Priority Register (TBPR)

This register defines the local priority of the associated message buffer. The local priority is used for the internal prioritization process of the MSCAN and is defined to be highest for the smallest binary number. The MSCAN implements the following internal prioritization mechanisms:

- All transmission buffers with a cleared TXEx flag participate in the prioritization immediately before the SOF (start of frame) is sent.
- The transmission buffer with the lowest local priority field wins the prioritization.

In cases of more than one buffer having the same lowest priority, the message buffer with the lower index number wins.

Module Base + 0xXXXD

| | 7 | 6 | 5 | 4 | 3 | 2 | 1 | 0 |
|---|---|---|---|---|---|---|---|---|
| R<br>W | PRIO7 | PRIO6 | PRIO5 | PRIO4 | PRIO3 | PRIO2 | PRIO1 | PRIO0 |
| Reset: | 0 | 0 | 0 | 0 | 0 | 0 | 0 | 0 |

**Figure 10-35. Transmit Buffer Priority Register (TBPR)**

Read: Anytime when TXEx flag is set (see Section 10.3.2.7, "MSCAN Transmitter Flag Register (CANTFLG)") and the corresponding transmit buffer is selected in CANTBSEL (see Section 10.3.2.11, "MSCAN Transmit Buffer Selection Register (CANTBSEL)").

Write: Anytime when TXEx flag is set (see Section 10.3.2.7, "MSCAN Transmitter Flag Register (CANTFLG)") and the corresponding transmit buffer is selected in CANTBSEL (see Section 10.3.2.11, "MSCAN Transmit Buffer Selection Register (CANTBSEL)").

### 10.3.3.5 Time Stamp Register (TSRH–TSRL)

If the TIME bit is enabled, the MSCAN will write a time stamp to the respective registers in the active transmit or receive buffer right after the EOF of a valid message on the CAN bus (see Section 10.3.2.1, "MSCAN Control Register 0 (CANCTL0)"). In case of a transmission, the CPU can only read the time stamp after the respective transmit buffer has been flagged empty.

The timer value, which is used for stamping, is taken from a free running internal CAN bit clock. A timer overrun is not indicated by the MSCAN. The timer is reset (all bits set to 0) during initialization mode. The CPU can only read the time stamp registers.

Module Base + 0xXXXE

| | 7 | 6 | 5 | 4 | 3 | 2 | 1 | 0 |
|---|---|---|---|---|---|---|---|---|
| R | TSR15 | TSR14 | TSR13 | TSR12 | TSR11 | TSR10 | TSR9 | TSR8 |
| W | | | | | | | | |
| Reset: | x | x | x | x | x | x | x | x |

**Figure 10-36. Time Stamp Register — High Byte (TSRH)**

Module Base + 0xXXXF

| | 7 | 6 | 5 | 4 | 3 | 2 | 1 | 0 |
|---|---|---|---|---|---|---|---|---|
| R | TSR7 | TSR6 | TSR5 | TSR4 | TSR3 | TSR2 | TSR1 | TSR0 |
| W | | | | | | | | |
| Reset: | x | x | x | x | x | x | x | x |

**Figure 10-37. Time Stamp Register — Low Byte (TSRL)**

Read: Anytime when TXEx flag is set (see Section 10.3.2.7, "MSCAN Transmitter Flag Register (CANTFLG)") and the corresponding transmit buffer is selected in CANTBSEL (see Section 10.3.2.11, "MSCAN Transmit Buffer Selection Register (CANTBSEL)").

Write: Unimplemented

## 10.4 Functional Description

### 10.4.1 General

This section provides a complete functional description of the MSCAN. It describes each of the features and modes listed in the introduction.

### 10.4.2 Message Storage

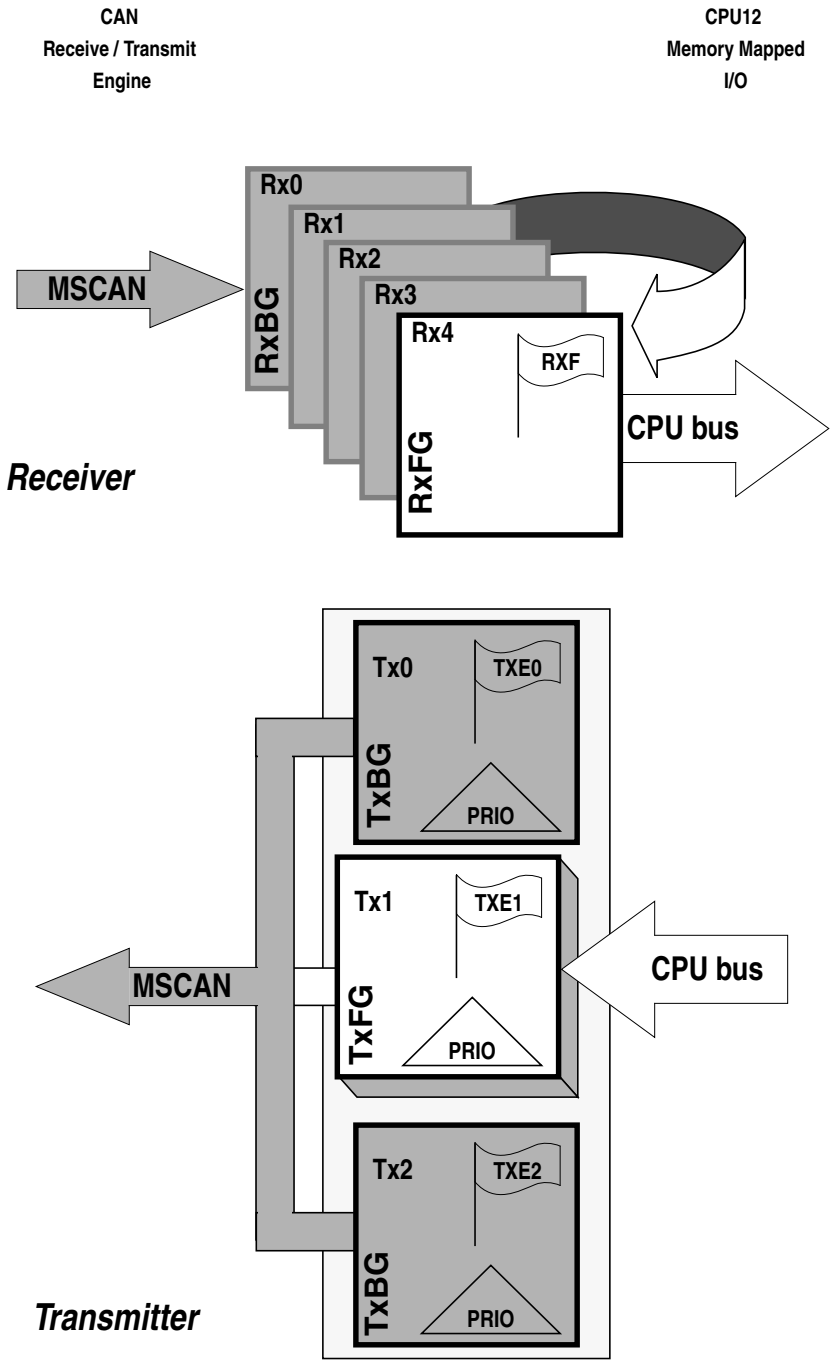


**Figure 10-38. User Model for Message Buffer Organization**

MSCAN facilitates a sophisticated message storage system which addresses the requirements of a broad range of network applications.

#### 10.4.2.1 Message Transmit Background

Modern application layer software is built upon two fundamental assumptions:

- Any CAN node is able to send out a stream of scheduled messages without releasing the CAN bus between the two messages. Such nodes arbitrate for the CAN bus immediately after sending the previous message and only release the CAN bus in case of lost arbitration.
- The internal message queue within any CAN node is organized such that the highest priority message is sent out first, if more than one message is ready to be sent.

The behavior described in the bullets above cannot be achieved with a single transmit buffer. That buffer must be reloaded immediately after the previous message is sent. This loading process lasts a finite amount of time and must be completed within the inter-frame sequence (IFS) to be able to send an uninterrupted stream of messages. Even if this is feasible for limited CAN bus speeds, it requires that the CPU reacts with short latencies to the transmit interrupt.

A double buffer scheme de-couples the reloading of the transmit buffer from the actual message sending and, therefore, reduces the reactiveness requirements of the CPU. Problems can arise if the sending of a message is finished while the CPU re-loads the second buffer. No buffer would then be ready for transmission, and the CAN bus would be released.

At least three transmit buffers are required to meet the first of the above requirements under all circumstances. The MSCAN has three transmit buffers.

The second requirement calls for some sort of internal prioritization which the MSCAN implements with the "local priority" concept described in Section 10.4.2.2, "Transmit Structures."

#### 10.4.2.2 Transmit Structures

The MSCAN triple transmit buffer scheme optimizes real-time performance by allowing multiple messages to be set up in advance. The three buffers are arranged as shown in Figure 10-38.

All three buffers have a 13-byte data structure similar to the outline of the receive buffers (see Section 10.3.3, "Programmer's Model of Message Storage"). An additional Section 10.3.3.4, "Transmit Buffer Priority Register (TBPR) contains an 8-bit local priority field (PRIO) (see Section 10.3.3.4, "Transmit Buffer Priority Register (TBPR)"). The remaining two bytes are used for time stamping of a message, if required (see Section 10.3.3.5, "Time Stamp Register (TSRH–TSRL)").

To transmit a message, the CPU must identify an available transmit buffer, which is indicated by a set transmitter buffer empty (TXEx) flag (see Section 10.3.2.7, "MSCAN Transmitter Flag Register (CANTFLG)"). If a transmit buffer is available, the CPU must set a pointer to this buffer by writing to the CANTBSEL register (see Section 10.3.2.11, "MSCAN Transmit Buffer Selection Register (CANTBSEL)"). This makes the respective buffer accessible within the CANTXFG address space (see Section 10.3.3, "Programmer's Model of Message Storage"). The algorithmic feature associated with the CANTBSEL register simplifies the transmit buffer selection. In addition, this scheme makes the handler software simpler because only one address area is applicable for the transmit process, and the required address space is minimized.

The CPU then stores the identifier, the control bits, and the data content into one of the transmit buffers. Finally, the buffer is flagged as ready for transmission by clearing the associated TXE flag.

The MSCAN then schedules the message for transmission and signals the successful transmission of the buffer by setting the associated TXE flag. A transmit interrupt (see Section 10.4.7.2, "Transmit Interrupt") is generated[1] when TXEx is set and can be used to drive the application software to re-load the buffer.

If more than one buffer is scheduled for transmission when the CAN bus becomes available for arbitration, the MSCAN uses the local priority setting of the three buffers to determine the prioritization. For this purpose, every transmit buffer has an 8-bit local priority field (PRIO). The application software programs this field when the message is set up. The local priority reflects the priority of this particular message relative to the set of messages being transmitted from this node. The lowest binary value of the PRIO field is defined to be the highest priority. The internal scheduling process takes place whenever the MSCAN arbitrates for the CAN bus. This is also the case after the occurrence of a transmission error.

When a high priority message is scheduled by the application software, it may become necessary to abort a lower priority message in one of the three transmit buffers. Because messages that are already in transmission cannot be aborted, the user must request the abort by setting the corresponding abort request bit (ABTRQ) (see Section 10.3.2.9, "MSCAN Transmitter Message Abort Request Register (CANTARQ)".) The MSCAN then grants the request, if possible, by:

1. Setting the corresponding abort acknowledge flag (ABTAK) in the CANTAAK register.
2. Setting the associated TXE flag to release the buffer.
3. Generating a transmit interrupt. The transmit interrupt handler software can determine from the setting of the ABTAK flag whether the message was aborted (ABTAK = 1) or sent (ABTAK = 0).

#### 10.4.2.3 Receive Structures

The received messages are stored in a five stage input FIFO. The five message buffers are alternately mapped into a single memory area (see Figure 10-38). The background receive buffer (RxBG) is exclusively associated with the MSCAN, but the foreground receive buffer (RxFG) is addressable by the CPU (see Figure 10-38). This scheme simplifies the handler software because only one address area is applicable for the receive process.

All receive buffers have a size of 15 bytes to store the CAN control bits, the identifier (standard or extended), the data contents, and a time stamp, if enabled (see Section 10.3.3, "Programmer's Model of Message Storage").

The receiver full flag (RXF) (see Section 10.3.2.5, "MSCAN Receiver Flag Register (CANRFLG)") signals the status of the foreground receive buffer. When the buffer contains a correctly received message with a matching identifier, this flag is set.

On reception, each message is checked to see whether it passes the filter (see Section 10.4.3, "Identifier Acceptance Filter") and simultaneously is written into the active RxBG. After successful reception of a valid message, the MSCAN shifts the content of RxBG into the receiver FIFO[2], sets the RXF flag, and generates a receive interrupt (see Section 10.4.7.3, "Receive Interrupt") to the CPU[3]. The user's receive handler must read the received message from the RxFG and then reset the RXF flag to acknowledge the interrupt and to release the foreground buffer. A new message, which can follow immediately after the IFS field of the CAN frame, is received into the next available RxBG. If the MSCAN receives an invalid

1. The transmit interrupt occurs only if not masked. A polling scheme can be applied on TXEx also.
2. Only if the RXF flag is not set.
3. The receive interrupt occurs only if not masked. A polling scheme can be applied on RXF also.

message in its RxBG (wrong identifier, transmission errors, etc.) the actual contents of the buffer will be over-written by the next message. The buffer will then not be shifted into the FIFO.

When the MSCAN module is transmitting, the MSCAN receives its own transmitted messages into the background receive buffer, RxBG, but does not shift it into the receiver FIFO, generate a receive interrupt, or acknowledge its own messages on the CAN bus. The exception to this rule is in loopback mode (see Section 10.3.2.2, "MSCAN Control Register 1 (CANCTL1)") where the MSCAN treats its own messages exactly like all other incoming messages. The MSCAN receives its own transmitted messages in the event that it loses arbitration. If arbitration is lost, the MSCAN must be prepared to become a receiver.

An overrun condition occurs when all receive message buffers in the FIFO are filled with correctly received messages with accepted identifiers and another message is correctly received from the CAN bus with an accepted identifier. The latter message is discarded and an error interrupt with overrun indication is generated if enabled (see Section 10.4.7.5, "Error Interrupt"). The MSCAN remains able to transmit messages while the receiver FIFO being filled, but all incoming messages are discarded. As soon as a receive buffer in the FIFO is available again, new valid messages will be accepted.

### 10.4.3 Identifier Acceptance Filter

The MSCAN identifier acceptance registers (see Section 10.3.2.12, "MSCAN Identifier Acceptance Control Register (CANIDAC)") define the acceptable patterns of the standard or extended identifier (ID[10:0] or ID[28:0]). Any of these bits can be marked 'don't care' in the MSCAN identifier mask registers (see Section 10.3.2.17, "MSCAN Identifier Mask Registers (CANIDMR0–CANIDMR7)").

A filter hit is indicated to the application software by a set receive buffer full flag (RXF = 1) and three bits in the CANIDAC register (see Section 10.3.2.12, "MSCAN Identifier Acceptance Control Register (CANIDAC)"). These identifier hit flags (IDHIT[2:0]) clearly identify the filter section that caused the acceptance. They simplify the application software's task to identify the cause of the receiver interrupt. If more than one hit occurs (two or more filters match), the lower hit has priority.

A very flexible programmable generic identifier acceptance filter has been introduced to reduce the CPU interrupt loading. The filter is programmable to operate in four different modes (see Bosch CAN 2.0A/B protocol specification):

- Two identifier acceptance filters, each to be applied to:
  - The full 29 bits of the extended identifier and to the following bits of the CAN 2.0B frame:
    - Remote transmission request (RTR)
    - Identifier extension (IDE)
    - Substitute remote request (SRR)
  - The 11 bits of the standard identifier plus the RTR and IDE bits of the CAN 2.0A/B messages[1]. This mode implements two filters for a full length CAN 2.0B compliant extended identifier. Figure 10-39 shows how the first 32-bit filter bank (CANIDAR0–CANIDAR3, CANIDMR0–CANIDMR3) produces a filter 0 hit. Similarly, the second filter bank (CANIDAR4–CANIDAR7, CANIDMR4–CANIDMR7) produces a filter 1 hit.
- Four identifier acceptance filters, each to be applied to

1. Although this mode can be used for standard identifiers, it is recommended to use the four or eight identifier acceptance filters for standard identifiers

— a) the 14 most significant bits of the extended identifier plus the SRR and IDE bits of CAN 2.0B messages or

— b) the 11 bits of the standard identifier, the RTR and IDE bits of CAN 2.0A/B messages. Figure 10-40 shows how the first 32-bit filter bank (CANIDAR0–CANIDA3, CANIDMR0–3CANIDMR) produces filter 0 and 1 hits. Similarly, the second filter bank (CANIDAR4–CANIDAR7, CANIDMR4–CANIDMR7) produces filter 2 and 3 hits.

- Eight identifier acceptance filters, each to be applied to the first 8 bits of the identifier. This mode implements eight independent filters for the first 8 bits of a CAN 2.0A/B compliant standard identifier or a CAN 2.0B compliant extended identifier. Figure 10-41 shows how the first 32-bit filter bank (CANIDAR0–CANIDAR3, CANIDMR0–CANIDMR3) produces filter 0 to 3 hits. Similarly, the second filter bank (CANIDAR4–CANIDAR7, CANIDMR4–CANIDMR7) produces filter 4 to 7 hits.
- Closed filter. No CAN message is copied into the foreground buffer RxFG, and the RXF flag is never set.

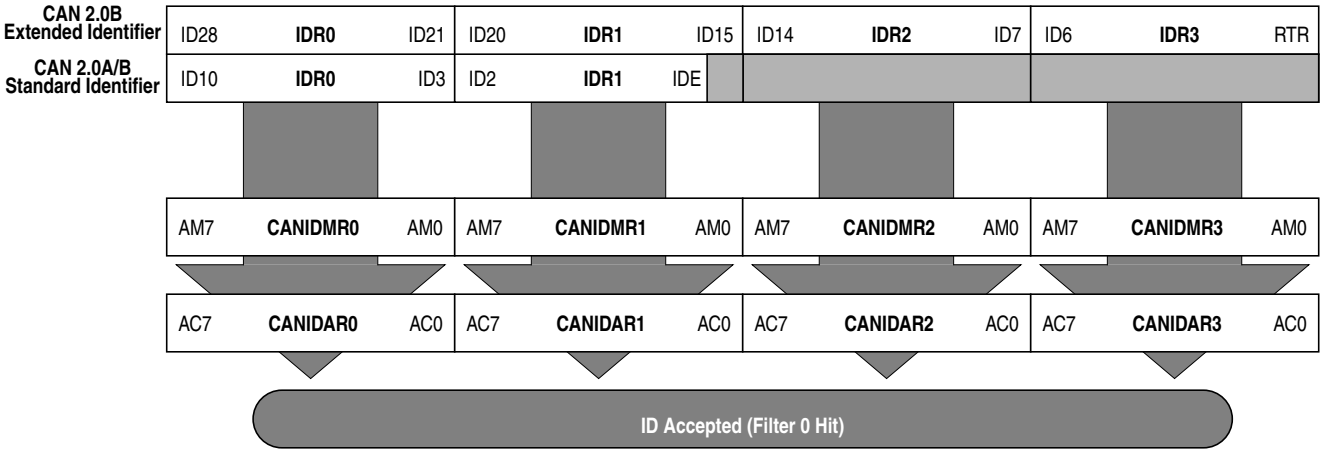


**Figure 10-39. 32-bit Maskable Identifier Acceptance Filter**

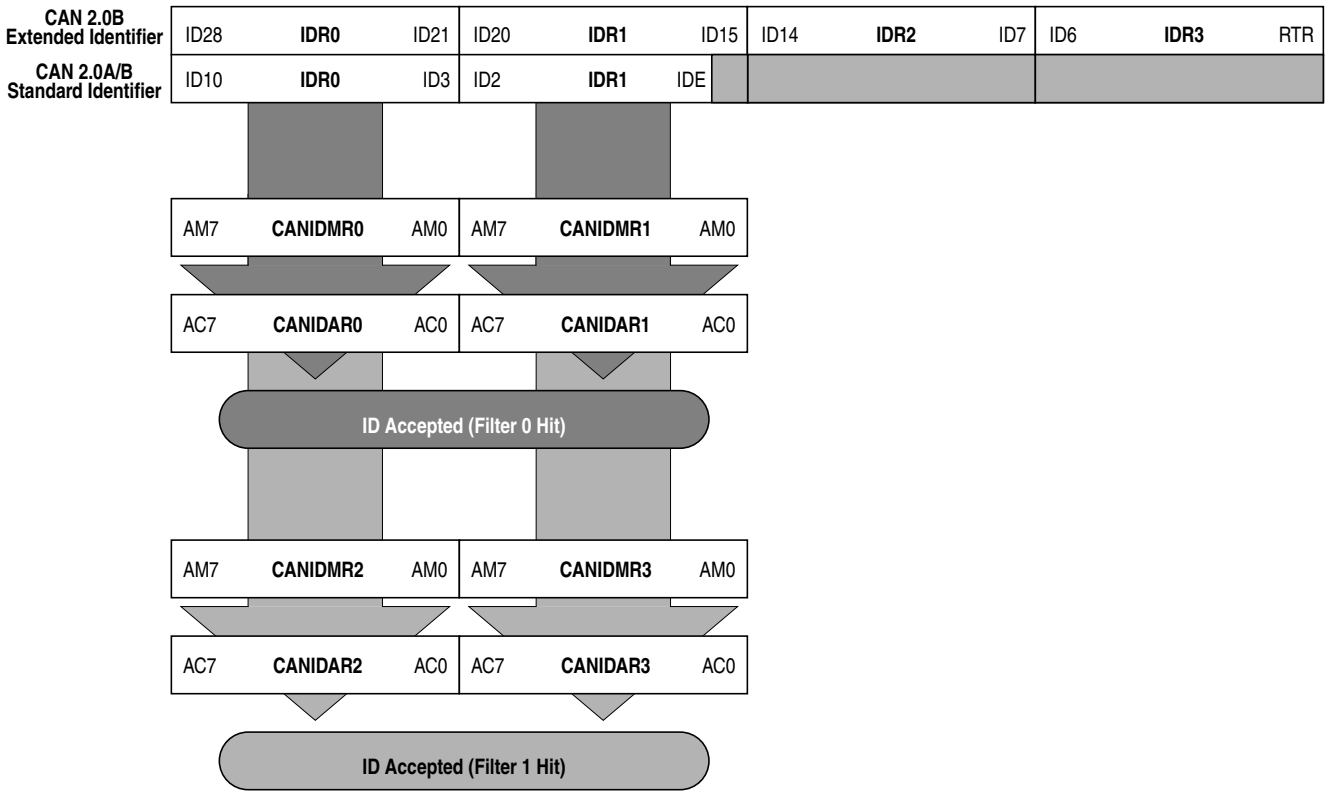


**Figure 10-40. 16-bit Maskable Identifier Acceptance Filters**

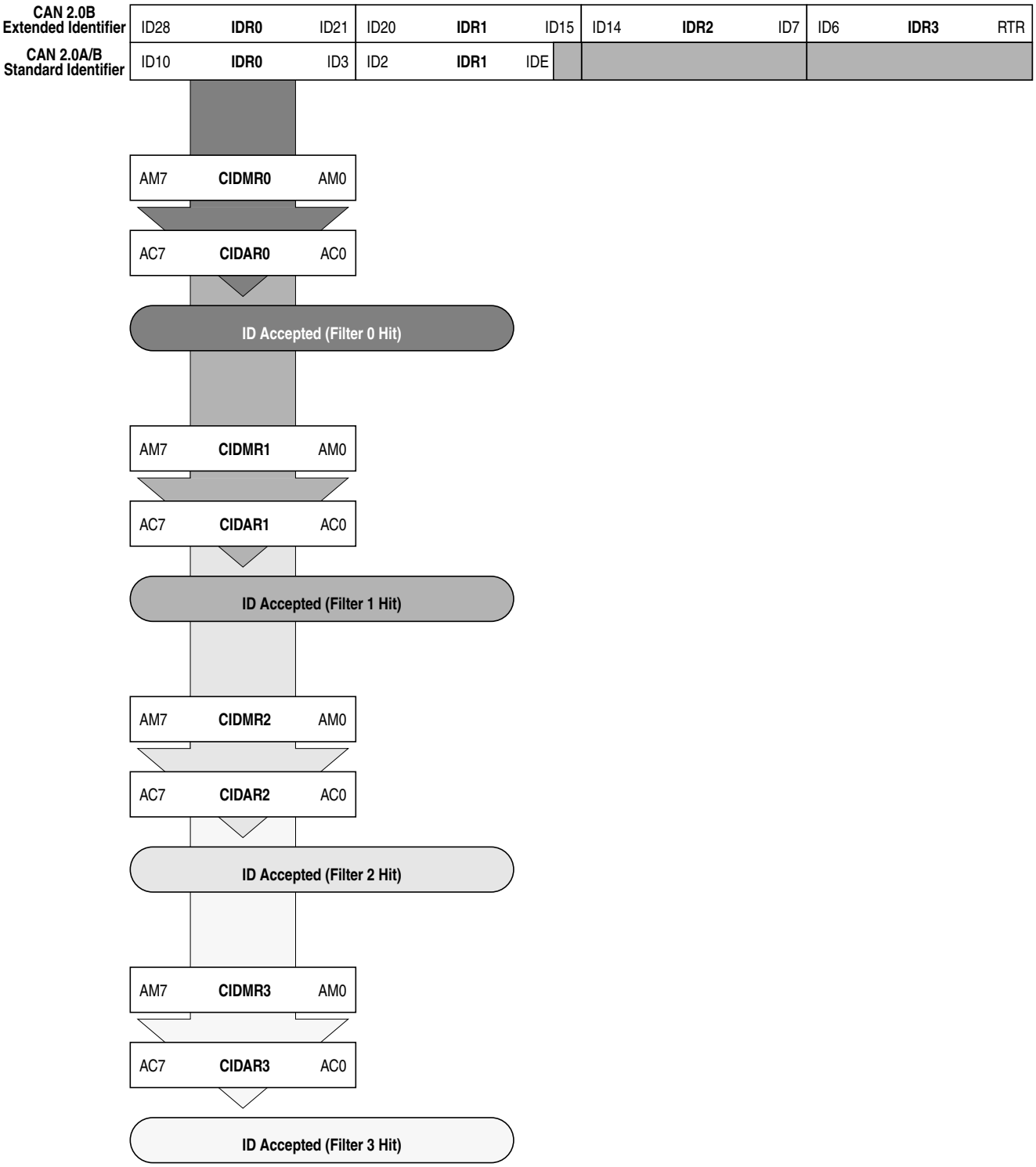


**Figure 10-41. 8-bit Maskable Identifier Acceptance Filters**

#### 10.4.3.1 Protocol Violation Protection

The MSCAN protects the user from accidentally violating the CAN protocol through programming errors. The protection logic implements the following features:

- The receive and transmit error counters cannot be written or otherwise manipulated.
- All registers which control the configuration of the MSCAN cannot be modified while the MSCAN is on-line. The MSCAN has to be in Initialization Mode. The corresponding INITRQ/INITAK handshake bits in the CANCTL0/CANCTL1 registers (see Section 10.3.2.1, "MSCAN Control Register 0 (CANCTL0)") serve as a lock to protect the following registers:
  - MSCAN control 1 register (CANCTL1)
  - MSCAN bus timing registers 0 and 1 (CANBTR0, CANBTR1)
  - MSCAN identifier acceptance control register (CANIDAC)
  - MSCAN identifier acceptance registers (CANIDAR0–CANIDAR7)
  - MSCAN identifier mask registers (CANIDMR0–CANIDMR7)
- The TXCAN pin is immediately forced to a recessive state when the MSCAN goes into the power down mode or initialization mode (see Section 10.4.5.6, "MSCAN Power Down Mode," and Section 10.4.5.5, "MSCAN Initialization Mode").
- The MSCAN enable bit (CANE) is writable only once in normal system operation modes, which provides further protection against inadvertently disabling the MSCAN.

#### 10.4.3.2 Clock System

Figure 10-42 shows the structure of the MSCAN clock generation circuitry.

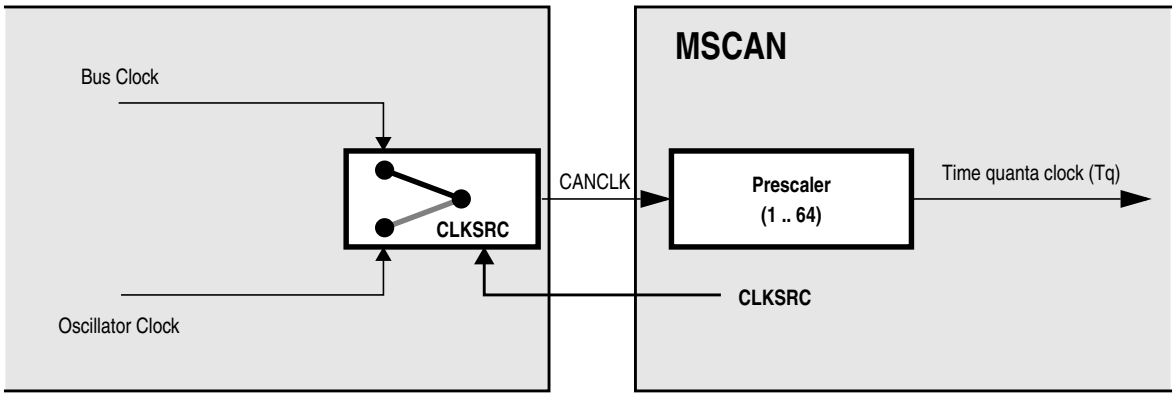


**Figure 10-42. MSCAN Clocking Scheme**

The clock source bit (CLKSRC) in the CANCTL1 register (10.3.2.2/10-294) defines whether the internal CANCLK is connected to the output of a crystal oscillator (oscillator clock) or to the bus clock.

The clock source has to be chosen such that the tight oscillator tolerance requirements (up to 0.4%) of the CAN protocol are met. Additionally, for high CAN bus rates (1 Mbps), a 45% to 55% duty cycle of the clock is required.

If the bus clock is generated from a PLL, it is recommended to select the oscillator clock rather than the bus clock due to jitter considerations, especially at the faster CAN bus rates.

For microcontrollers without a clock and reset generator (CRG), CANCLK is driven from the crystal oscillator (oscillator clock).

A programmable prescaler generates the time quanta (Tq) clock from CANCLK. A time quantum is the atomic unit of time handled by the MSCAN.

***Eqn. 10-2***

$$Tq = \frac{f_{CANCLK}}{(\text{Prescaler value})}$$

A bit time is subdivided into three segments as described in the Bosch CAN specification. (see Figure 10-43):

- SYNC_SEG: This segment has a fixed length of one time quantum. Signal edges are expected to happen within this section.
- Time Segment 1: This segment includes the PROP_SEG and the PHASE_SEG1 of the CAN standard. It can be programmed by setting the parameter TSEG1 to consist of 4 to 16 time quanta.
- Time Segment 2: This segment represents the PHASE_SEG2 of the CAN standard. It can be programmed by setting the TSEG2 parameter to be 2 to 8 time quanta long.

***Eqn. 10-3***

$$\text{Bit Rate} = \frac{f_{Tq}}{(\text{number of Time Quanta})}$$

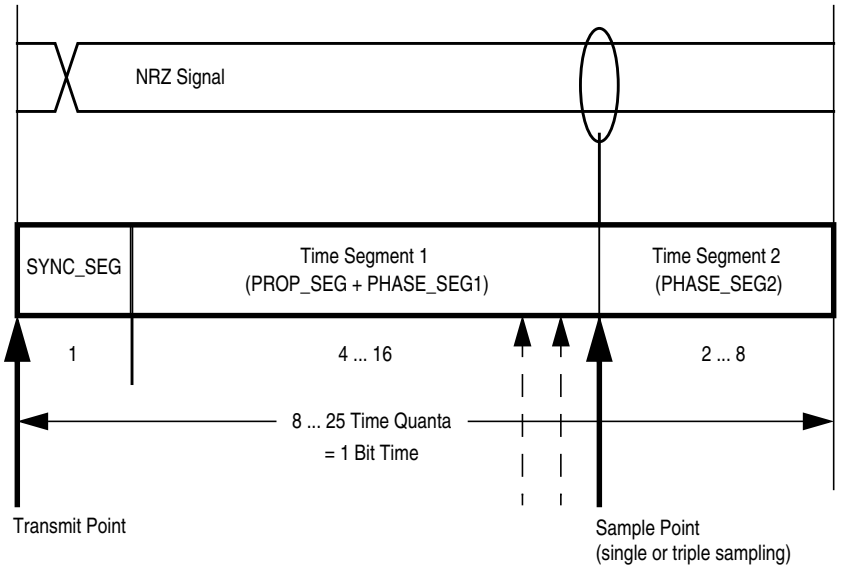


**Figure 10-43. Segments within the Bit Time**

**Table 10-33. Time Segment Syntax**

| Syntax | Description |
|---|---|
| SYNC_SEG | System expects transitions to occur on the CAN bus during this period. |
| Transmit Point | A node in transmit mode transfers a new value to the CAN bus at this point. |
| Sample Point | A node in receive mode samples the CAN bus at this point. If the three samples per bit option is selected, then this point marks the position of the third sample. |

The synchronization jump width (see the Bosch CAN specification for details) can be programmed in a range of 1 to 4 time quanta by setting the SJW parameter.

The SYNC_SEG, TSEG1, TSEG2, and SJW parameters are set by programming the MSCAN bus timing registers (CANBTR0, CANBTR1) (see Section 10.3.2.3, "MSCAN Bus Timing Register 0 (CANBTR0)" and Section 10.3.2.4, "MSCAN Bus Timing Register 1 (CANBTR1)").

Table 10-34 gives an overview of the CAN compliant segment settings and the related parameter values.

**NOTE**

It is the user's responsibility to ensure the bit time settings are in compliance with the CAN standard.

**Table 10-34. CAN Standard Compliant Bit Time Segment Settings**

| Time Segment 1 | TSEG1 | Time Segment 2 | TSEG2 | Synchronization Jump Width | SJW |
|---|---|---|---|---|---|
| 5 .. 10 | 4 .. 9 | 2 | 1 | 1 .. 2 | 0 .. 1 |
| 4 .. 11 | 3 .. 10 | 3 | 2 | 1 .. 3 | 0 .. 2 |
| 5 .. 12 | 4 .. 11 | 4 | 3 | 1 .. 4 | 0 .. 3 |
| 6 .. 13 | 5 .. 12 | 5 | 4 | 1 .. 4 | 0 .. 3 |
| 7 .. 14 | 6 .. 13 | 6 | 5 | 1 .. 4 | 0 .. 3 |
| 8 .. 15 | 7 .. 14 | 7 | 6 | 1 .. 4 | 0 .. 3 |
| 9 .. 16 | 8 .. 15 | 8 | 7 | 1 .. 4 | 0 .. 3 |

## 10.4.4 Modes of Operation

### 10.4.4.1 Normal Modes

The MSCAN module behaves as described within this specification in all normal system operation modes.

### 10.4.4.2 Special Modes

The MSCAN module behaves as described within this specification in all special system operation modes.

#### 10.4.4.3 Emulation Modes

In all emulation modes, the MSCAN module behaves just like normal system operation modes as described within this specification.

#### 10.4.4.4 Listen-Only Mode

In an optional CAN bus monitoring mode (listen-only), the CAN node is able to receive valid data frames and valid remote frames, but it sends only "recessive" bits on the CAN bus. In addition, it cannot start a transmision. If the MAC sub-layer is required to send a "dominant" bit (ACK bit, overload flag, or active error flag), the bit is rerouted internally so that the MAC sub-layer monitors this "dominant" bit, although the CAN bus may remain in recessive state externally.

#### 10.4.4.5 Security Modes

The MSCAN module has no security features.

### 10.4.5 Low-Power Options

If the MSCAN is disabled (CANE = 0), the MSCAN clocks are stopped for power saving.

If the MSCAN is enabled (CANE = 1), the MSCAN has two additional modes with reduced power consumption, compared to normal mode: sleep and power down mode. In sleep mode, power consumption is reduced by stopping all clocks except those to access the registers from the CPU side. In power down mode, all clocks are stopped and no power is consumed.

Table 10-35 summarizes the combinations of MSCAN and CPU modes. A particular combination of modes is entered by the given settings on the CSWAI and SLPRQ/SLPAK bits.

For all modes, an MSCAN wake-up interrupt can occur only if the MSCAN is in sleep mode (SLPRQ = 1 and SLPAK = 1), wake-up functionality is enabled (WUPE = 1), and the wake-up interrupt is enabled (WUPIE = 1).

**Table 10-35. CPU vs. MSCAN Operating Modes**

| CPU Mode | MSCAN Mode | | | |
|---|---|---|---|---|
| | Normal | Reduced Power Consumption | | |
| | | Sleep | Power Down | Disabled (CANE=0) |
| RUN | CSWAI = X[1]<br>SLPRQ = 0<br>SLPAK = 0 | CSWAI = X<br>SLPRQ = 1<br>SLPAK = 1 | | CSWAI = X<br>SLPRQ = X<br>SLPAK = X |
| WAIT | CSWAI = 0<br>SLPRQ = 0<br>SLPAK = 0 | CSWAI = 0<br>SLPRQ = 1<br>SLPAK = 1 | CSWAI = 1<br>SLPRQ = X<br>SLPAK = X | CSWAI = X<br>SLPRQ = X<br>SLPAK = X |
| STOP | | | CSWAI = X<br>SLPRQ = X<br>SLPAK = X | CSWAI = X<br>SLPRQ = X<br>SLPAK = X |

1. 'X' means don't care.

#### 10.4.5.1 Operation in Run Mode

As shown in Table 10-35, only MSCAN sleep mode is available as low power option when the CPU is in run mode.

#### 10.4.5.2 Operation in Wait Mode

The WAI instruction puts the MCU in a low power consumption stand-by mode. If the CSWAI bit is set, additional power can be saved in power down mode because the CPU clocks are stopped. After leaving this power down mode, the MSCAN restarts its internal controllers and enters normal mode again.

While the CPU is in wait mode, the MSCAN can be operated in normal mode and generate interrupts (registers can be accessed via background debug mode). The MSCAN can also operate in any of the low-power modes depending on the values of the SLPRQ/SLPAK and CSWAI bits as seen in Table 10-35.

#### 10.4.5.3 Operation in Stop Mode

The STOP instruction puts the MCU in a low power consumption stand-by mode. In stop mode, the MSCAN is set in power down mode regardless of the value of the SLPRQ/SLPAK and CSWAI bits Table 10-35.

#### 10.4.5.4 MSCAN Sleep Mode

The CPU can request the MSCAN to enter this low power mode by asserting the SLPRQ bit in the CANCTL0 register. The time when the MSCAN enters sleep mode depends on a fixed synchronization delay and its current activity:

- If there are one or more message buffers scheduled for transmission (TXEx = 0), the MSCAN will continue to transmit until all transmit message buffers are empty (TXEx = 1, transmitted successfully or aborted) and then goes into sleep mode.
- If the MSCAN is receiving, it continues to receive and goes into sleep mode as soon as the CAN bus next becomes idle.
- If the MSCAN is neither transmitting nor receiving, it immediately goes into sleep mode.

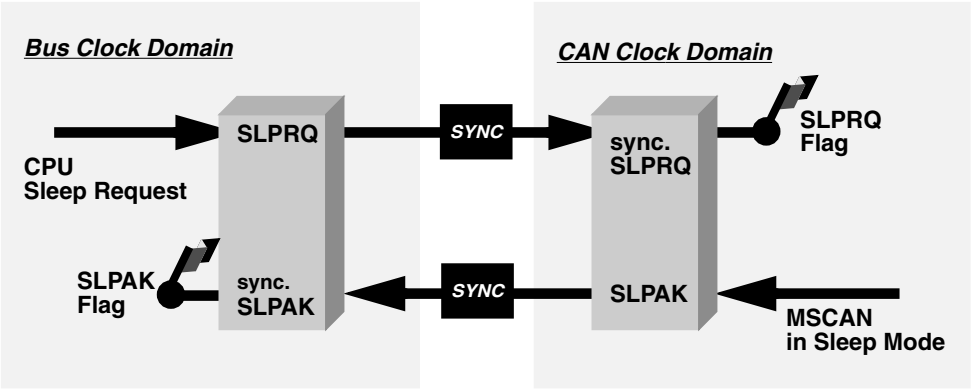


**Figure 10-44. Sleep Request / Acknowledge Cycle**

**NOTE**

The application software must avoid setting up a transmission (by clearing one or more TXEx flag(s)) and immediately request sleep mode (by setting SLPRQ). Whether the MSCAN starts transmitting or goes into sleep mode directly depends on the exact sequence of operations.

If sleep mode is active, the SLPRQ and SLPAK bits are set (Figure 10-44). The application software must use SLPAK as a handshake indication for the request (SLPRQ) to go into sleep mode.

When in sleep mode (SLPRQ = 1 and SLPAK = 1), the MSCAN stops its internal clocks. However, clocks that allow register accesses from the CPU side continue to run.

If the MSCAN is in bus-off state, it stops counting the 128 occurrences of 11 consecutive recessive bits due to the stopped clocks. The TXCAN pin remains in a recessive state. If RXF = 1, the message can be read and RXF can be cleared. Shifting a new message into the foreground buffer of the receiver FIFO (RxFG) does not take place while in sleep mode.

It is possible to access the transmit buffers and to clear the associated TXE flags. No message abort takes place while in sleep mode.

If the WUPE bit in CANCLT0 is not asserted, the MSCAN will mask any activity it detects on CAN. The RXCAN pin is therefore held internally in a recessive state. This locks the MSCAN in sleep mode (Figure 10-45). WUPE must be set before entering sleep mode to take effect.

The MSCAN is able to leave sleep mode (wake up) only when:

- CAN bus activity occurs and WUPE = 1

  or

- the CPU clears the SLPRQ bit

**NOTE**

The CPU cannot clear the SLPRQ bit before sleep mode (SLPRQ = 1 and SLPAK = 1) is active.

After wake-up, the MSCAN waits for 11 consecutive recessive bits to synchronize to the CAN bus. As a consequence, if the MSCAN is woken-up by a CAN frame, this frame is not received.

The receive message buffers (RxFG and RxBG) contain messages if they were received before sleep mode was entered. All pending actions will be executed upon wake-up; copying of RxBG into RxFG, message aborts and message transmissions. If the MSCAN remains in bus-off state after sleep mode was exited, it continues counting the 128 occurrences of 11 consecutive recessive bits.

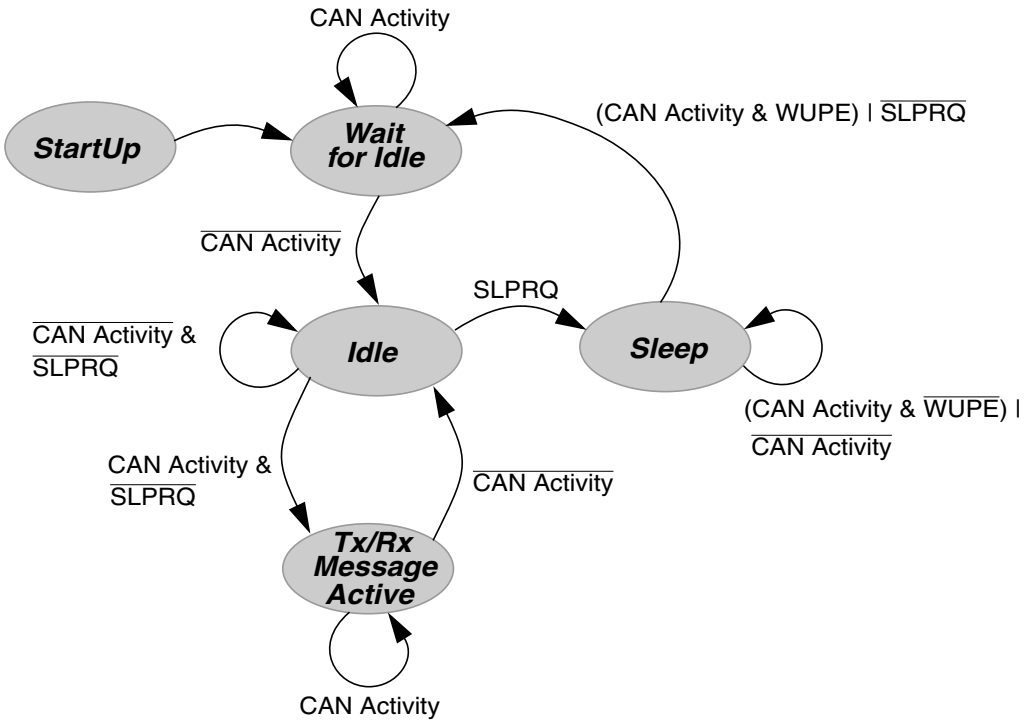


**Figure 10-45. Simplified State Transitions for Entering/Leaving Sleep Mode**

#### 10.4.5.5 MSCAN Initialization Mode

In initialization mode, any on-going transmission or reception is immediately aborted and synchronization to the CAN bus is lost, potentially causing CAN protocol violations. To protect the CAN bus system from fatal consequences of violations, the MSCAN immediately drives the TXCAN pin into a recessive state.

**NOTE**

The user is responsible for ensuring that the MSCAN is not active when initialization mode is entered. The recommended procedure is to bring the MSCAN into sleep mode (SLPRQ = 1 and SLPAK = 1) before setting the INITRQ bit in the CANCTL0 register. Otherwise, the abort of an on-going message can cause an error condition and can impact other CAN bus devices.

In initialization mode, the MSCAN is stopped. However, interface registers remain accessible. This mode is used to reset the CANCTL0, CANRFLG, CANRIER, CANTFLG, CANTIER, CANTARQ, CANTAAK, and CANTBSEL registers to their default values. In addition, the MSCAN enables the configuration of the CANBTR0, CANBTR1 bit timing registers; CANIDAC; and the CANIDAR, CANIDMR message filters. See Section 10.3.2.1, "MSCAN Control Register 0 (CANCTL0)," for a detailed description of the initialization mode.

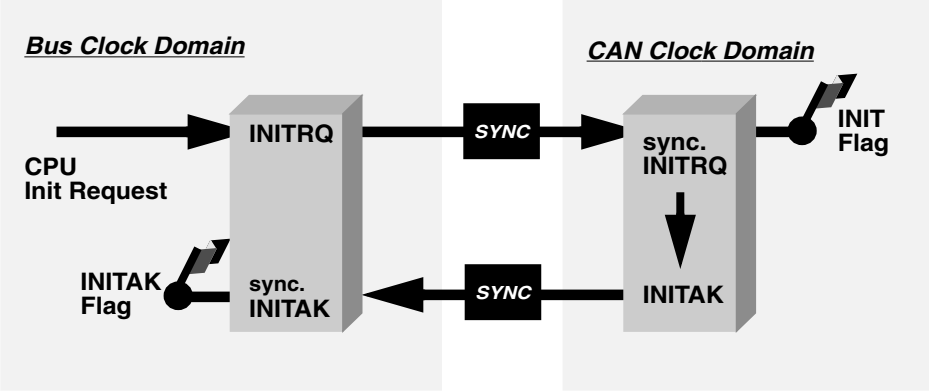


**Figure 10-46. Initialization Request/Acknowledge Cycle**

Due to independent clock domains within the MSCAN, INITRQ must be synchronized to all domains by using a special handshake mechanism. This handshake causes additional synchronization delay (see Section Figure 10-46., "Initialization Request/Acknowledge Cycle").

If there is no message transfer ongoing on the CAN bus, the minimum delay will be two additional bus clocks and three additional CAN clocks. When all parts of the MSCAN are in initialization mode, the INITAK flag is set. The application software must use INITAK as a handshake indication for the request (INITRQ) to go into initialization mode.

**NOTE**

The CPU cannot clear INITRQ before initialization mode (INITRQ = 1 and INITAK = 1) is active.

#### 10.4.5.6 MSCAN Power Down Mode

The MSCAN is in power down mode (Table 10-35) when

- CPU is in stop mode

  or
- CPU is in wait mode and the CSWAI bit is set

When entering the power down mode, the MSCAN immediately stops all ongoing transmissions and receptions, potentially causing CAN protocol violations. To protect the CAN bus system from fatal consequences of violations to the above rule, the MSCAN immediately drives the TXCAN pin into a recessive state.

**NOTE**

The user is responsible for ensuring that the MSCAN is not active when power down mode is entered. The recommended procedure is to bring the MSCAN into Sleep mode before the STOP or WAI instruction (if CSWAI is set) is executed. Otherwise, the abort of an ongoing message can cause an error condition and impact other CAN bus devices.

In power down mode, all clocks are stopped and no registers can be accessed. If the MSCAN was not in sleep mode before power down mode became active, the module performs an internal recovery cycle after powering up. This causes some fixed delay before the module enters normal mode again.

#### 10.4.5.7 Programmable Wake-Up Function

The MSCAN can be programmed to wake up the MSCAN as soon as CAN bus activity is detected (see control bit WUPE in Section 10.3.2.1, "MSCAN Control Register 0 (CANCTL0)"). The sensitivity to existing CAN bus action can be modified by applying a low-pass filter function to the RXCAN input line while in sleep mode (see control bit WUPM in Section 10.3.2.2, "MSCAN Control Register 1 (CANCTL1)").

This feature can be used to protect the MSCAN from wake-up due to short glitches on the CAN bus lines. Such glitches can result from—for example—electromagnetic interference within noisy environments.

### 10.4.6 Reset Initialization

The reset state of each individual bit is listed in Section 10.3.2, "Register Descriptions," which details all the registers and their bit-fields.

### 10.4.7 Interrupts

This section describes all interrupts originated by the MSCAN. It documents the enable bits and generated flags. Each interrupt is listed and described separately.

#### 10.4.7.1 Description of Interrupt Operation

The MSCAN supports four interrupt vectors (see Table 10-36), any of which can be individually masked (for details see sections from Section 10.3.2.6, "MSCAN Receiver Interrupt Enable Register (CANRIER)," to Section 10.3.2.8, "MSCAN Transmitter Interrupt Enable Register (CANTIER)").

**NOTE**

The dedicated interrupt vector addresses are defined in the Resets and Interrupts chapter.

**Table 10-36. Interrupt Vectors**

| Interrupt Source | CCR Mask | Local Enable |
|---|---|---|
| Wake-Up Interrupt (WUPIF) | I bit | CANRIER (WUPIE) |
| Error Interrupts Interrupt (CSCIF, OVRIF) | I bit | CANRIER (CSCIE, OVRIE) |
| Receive Interrupt (RXF) | I bit | CANRIER (RXFIE) |
| Transmit Interrupts (TXE[2:0]) | I bit | CANTIER (TXEIE[2:0]) |

#### 10.4.7.2 Transmit Interrupt

At least one of the three transmit buffers is empty (not scheduled) and can be loaded to schedule a message for transmission. The TXEx flag of the empty message buffer is set.

#### 10.4.7.3 Receive Interrupt

A message is successfully received and shifted into the foreground buffer (RxFG) of the receiver FIFO. This interrupt is generated immediately after receiving the EOF symbol. The RXF flag is set. If there are multiple messages in the receiver FIFO, the RXF flag is set as soon as the next message is shifted to the foreground buffer.

#### 10.4.7.4 Wake-Up Interrupt

A wake-up interrupt is generated if activity on the CAN bus occurs during MSCN internal sleep mode. WUPE (see Section 10.3.2.1, "MSCAN Control Register 0 (CANCTL0)") must be enabled.

#### 10.4.7.5 Error Interrupt

An error interrupt is generated if an overrun of the receiver FIFO, error, warning, or bus-off condition occurrs. Section 10.3.2.5, "MSCAN Receiver Flag Register (CANRFLG) indicates one of the following conditions:

- **Overrun** — An overrun condition of the receiver FIFO as described in Section 10.4.2.3, "Receive Structures," occurred.
- **CAN Status Change** — The actual value of the transmit and receive error counters control the CAN bus state of the MSCAN. As soon as the error counters skip into a critical range (Tx/Rx-warning, Tx/Rx-error, bus-off) the MSCAN flags an error condition. The status change, which caused the error condition, is indicated by the TSTAT and RSTAT flags (see Section 10.3.2.5,

"MSCAN Receiver Flag Register (CANRFLG)" and Section 10.3.2.6, "MSCAN Receiver Interrupt Enable Register (CANRIER)").

#### 10.4.7.6 Interrupt Acknowledge

Interrupts are directly associated with one or more status flags in either the Section 10.3.2.5, "MSCAN Receiver Flag Register (CANRFLG)" or the Section 10.3.2.7, "MSCAN Transmitter Flag Register (CANTFLG)." Interrupts are pending as long as one of the corresponding flags is set. The flags in CANRFLG and CANTFLG must be reset within the interrupt handler to handshake the interrupt. The flags are reset by writing a 1 to the corresponding bit position. A flag cannot be cleared if the respective condition prevails.

**NOTE**

It must be guaranteed that the CPU clears only the bit causing the current interrupt. For this reason, bit manipulation instructions (BSET) must not be used to clear interrupt flags. These instructions may cause accidental clearing of interrupt flags which are set after entering the current interrupt service routine.

#### 10.4.7.7 Recovery from Stop or Wait

The MSCAN can recover from stop or wait via the wake-up interrupt. This interrupt can only occur if the MSCAN was in sleep mode (SLPRQ = 1 and SLPAK = 1) before entering power down mode, the wake-up option is enabled (WUPE = 1), and the wake-up interrupt is enabled (WUPIE = 1).

## 10.5 Initialization/Application Information

### 10.5.1 MSCAN initialization

The procedure to initially start up the MSCAN module out of reset is as follows:

1. Assert CANE
2. Write to the configuration registers in initialization mode
3. Clear INITRQ to leave initialization mode and enter normal mode

If the configuration of registers which are writable in initialization mode needs to be changed only when the MSCAN module is in normal mode:

1. Bring the module into sleep mode by setting SLPRQ and awaiting SLPAK to assert after the CAN bus becomes idle.
2. Enter initialization mode: assert INITRQ and await INITAK
3. Write to the configuration registers in initialization mode
4. Clear INITRQ to leave initialization mode and continue in normal mode

# Chapter 11
# Oscillator (OSCV2) Block Description

## 11.1 Introduction

The OSCV2 module provides two alternative oscillator concepts:

- A low noise and low power Colpitts oscillator with amplitude limitation control (ALC)
- A robust full swing Pierce oscillator with the possibility to feed in an external square wave

### 11.1.1 Features

The Colpitts OSCV2 option provides the following features:

- Amplitude limitation control (ALC) loop:
  - Low power consumption and low current induced RF emission
  - Sinusoidal waveform with low RF emission
  - Low crystal stress (an external damping resistor is not required)
  - Normal and low amplitude mode for further reduction of power and emission
- An external biasing resistor is not required

The Pierce OSC option provides the following features:

- Wider high frequency operation range
- No DC voltage applied across the crystal
- Full rail-to-rail (2.5 V nominal) swing oscillation with low EM susceptibility
- Fast start up

Common features:

- Clock monitor (CM)
- Operation from the $V_{DDPLL}$ 2.5 V (nominal) supply rail

### 11.1.2 Modes of Operation

Two modes of operation exist:

- Amplitude limitation controlled Colpitts oscillator mode suitable for power and emission critical applications
- Full swing Pierce oscillator mode that can also be used to feed in an externally generated square wave suitable for high frequency operation and harsh environments

## 11.2 External Signal Description

This section lists and describes the signals that connect off chip.

### 11.2.1 $V_{DDPLL}$ and $V_{SSPLL}$ — PLL Operating Voltage, PLL Ground

These pins provide the operating voltage ($V_{DDPLL}$) and ground ($V_{SSPLL}$) for the OSCV2 circuitry. This allows the supply voltage to the OSCV2 to be independently bypassed.

### 11.2.2 EXTAL and XTAL — Clock/Crystal Source Pins

These pins provide the interface for either a crystal or a CMOS compatible clock to control the internal clock generator circuitry. EXTAL is the external clock input or the input to the crystal oscillator amplifier. XTAL is the output of the crystal oscillator amplifier. All the MCU internal system clocks are derived from the EXTAL input frequency. In full stop mode (PSTP = 0) the EXTAL pin is pulled down by an internal resistor of typical 200 kΩ.

**NOTE**

Freescale Semiconductor recommends an evaluation of the application board and chosen resonator or crystal by the resonator or crystal supplier.

The Crystal circuit is changed from standard.

The Colpitts circuit is not suited for overtone resonators and crystals.

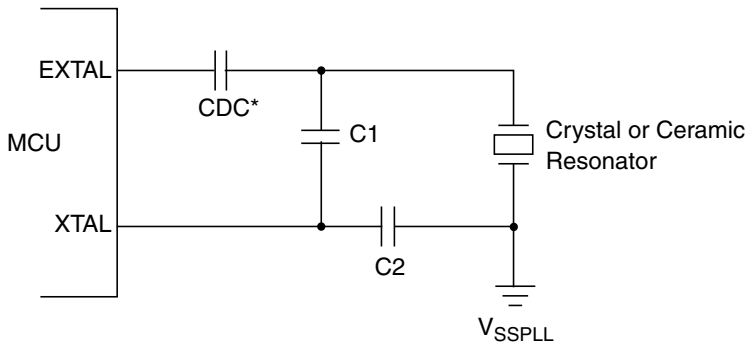


* Due to the nature of a translated ground Colpitts oscillator a DC voltage bias is applied to the crystal.

Please contact the crystal manufacturer for crystal DC bias conditions and recommended capacitor value CDC.

**Figure 11-1. Colpitts Oscillator Connections (XCLKS = 0)**

**NOTE**

The Pierce circuit is not suited for overtone resonators and crystals without a careful component selection.

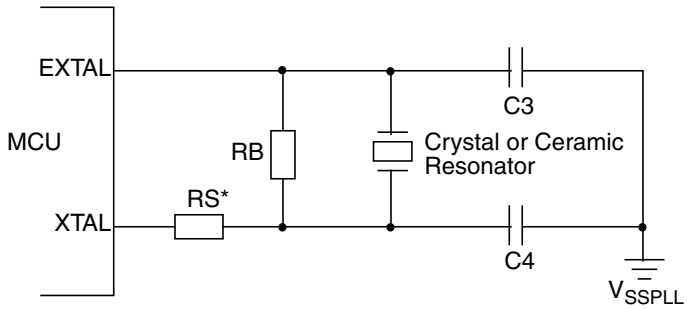


* Rs can be zero (shorted) when used with higher frequency crystals.
Refer to manufacturer's data.

**Figure 11-2. Pierce Oscillator Connections (XCLKS = 1)**

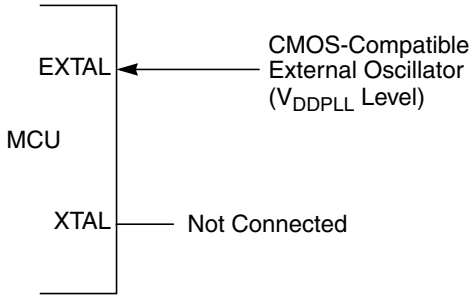


**Figure 11-3. External Clock Connections (XCLKS = 1)**

## 11.2.3 XCLKS — Colpitts/Pierce Oscillator Selection Signal

The XCLKS is an input signal which controls whether a crystal in combination with the internal Colpitts (low power) oscillator is used or whether the Pierce oscillator/external clock circuitry is used. The XCLKS signal is sampled during reset with the rising edge of $\overline{\text{RESET}}$. Table 11-1 lists the state coding of the sampled XCLKS signal. Refer to the device overview chapter for polarity of the XCLKS pin.

**Table 11-1. Clock Selection Based on XCLKS**

| XCLKS | Description |
|---|---|
| 0 | Colpitts oscillator selected |
| 1 | Pierce oscillator/external clock selected |

## 11.3 Memory Map and Register Definition

The CRG contains the registers and associated bits for controlling and monitoring the OSCV2 module.

## 11.4 Functional Description

The OSCV2 block has two external pins, EXTAL and XTAL. The oscillator input pin, EXTAL, is intended to be connected to either a crystal or an external clock source. The selection of Colpitts oscillator or Pierce oscillator/external clock depends on the XCLKS signal which is sampled during reset. The XTAL pin is an output signal that provides crystal circuit feedback.

A buffered EXTAL signal, OSCCLK, becomes the internal reference clock. To improve noise immunity, the oscillator is powered by the $V_{DDPLL}$ and $V_{SSPLL}$ power supply pins.

The Pierce oscillator can be used for higher frequencies compared to the low power Colpitts oscillator.

### 11.4.1 Amplitude Limitation Control (ALC)

The Colpitts oscillator is equipped with a feedback system which does not waste current by generating harmonics. Its configuration is “Colpitts oscillator with translated ground.” The transconductor used is driven by a current source under the control of a peak detector which will measure the amplitude of the AC signal appearing on EXTAL node in order to implement an amplitude limitation control (ALC) loop. The ALC loop is in charge of reducing the quiescent current in the transconductor as a result of an increase in the oscillation amplitude. The oscillation amplitude can be limited to two values. The normal amplitude which is intended for non power saving modes and a small amplitude which is intended for low power operation modes. Please refer to the CRG block description chapter for the control and assignment of the amplitude value to operation modes.

### 11.4.2 Clock Monitor (CM)

The clock monitor circuit is based on an internal resistor-capacitor (RC) time delay so that it can operate without any MCU clocks. If no OSCCLK edges are detected within this RC time delay, the clock monitor indicates a failure which asserts self clock mode or generates a system reset depending on the state of SCME bit. If the clock monitor is disabled or the presence of clocks is detected no failure is indicated.The clock monitor function is enabled/disabled by the CME control bit, described in the CRG block description chapter.

## 11.5 Interrupts

OSCV2 contains a clock monitor, which can trigger an interrupt or reset. The control bits and status bits for the clock monitor are described in the CRG block description chapter.

# Chapter 12
# Pulse-Width Modulator (PWM8B6CV1) Block Description

## 12.1 Introduction

The pulse width modulation (PWM) definition is based on the HC12 PWM definitions. The PWM8B6CV1 module contains the basic features from the HC11 with some of the enhancements incorporated on the HC12, that is center aligned output mode and four available clock sources. The PWM8B6CV1 module has six channels with independent control of left and center aligned outputs on each channel.

Each of the six PWM channels has a programmable period and duty cycle as well as a dedicated counter. A flexible clock select scheme allows a total of four different clock sources to be used with the counters. Each of the modulators can create independent continuous waveforms with software-selectable duty rates from 0% to 100%. The PWM outputs can be programmed as left aligned outputs or center aligned outputs

### 12.1.1 Features

- Six independent PWM channels with programmable period and duty cycle
- Dedicated counter for each PWM channel
- Programmable PWM enable/disable for each channel
- Software selection of PWM duty pulse polarity for each channel
- Period and duty cycle are double buffered. Change takes effect when the end of the effective period is reached (PWM counter reaches 0) or when the channel is disabled.
- Programmable center or left aligned outputs on individual channels
- Six 8-bit channel or three 16-bit channel PWM resolution
- Four clock sources (A, B, SA, and SB) provide for a wide range of frequencies.
- Programmable clock select logic
- Emergency shutdown

### 12.1.2 Modes of Operation

There is a software programmable option for low power consumption in wait mode that disables the input clock to the prescaler.

In freeze mode there is a software programmable option to disable the input clock to the prescaler. This is useful for emulation.

### 12.1.3 Block Diagram

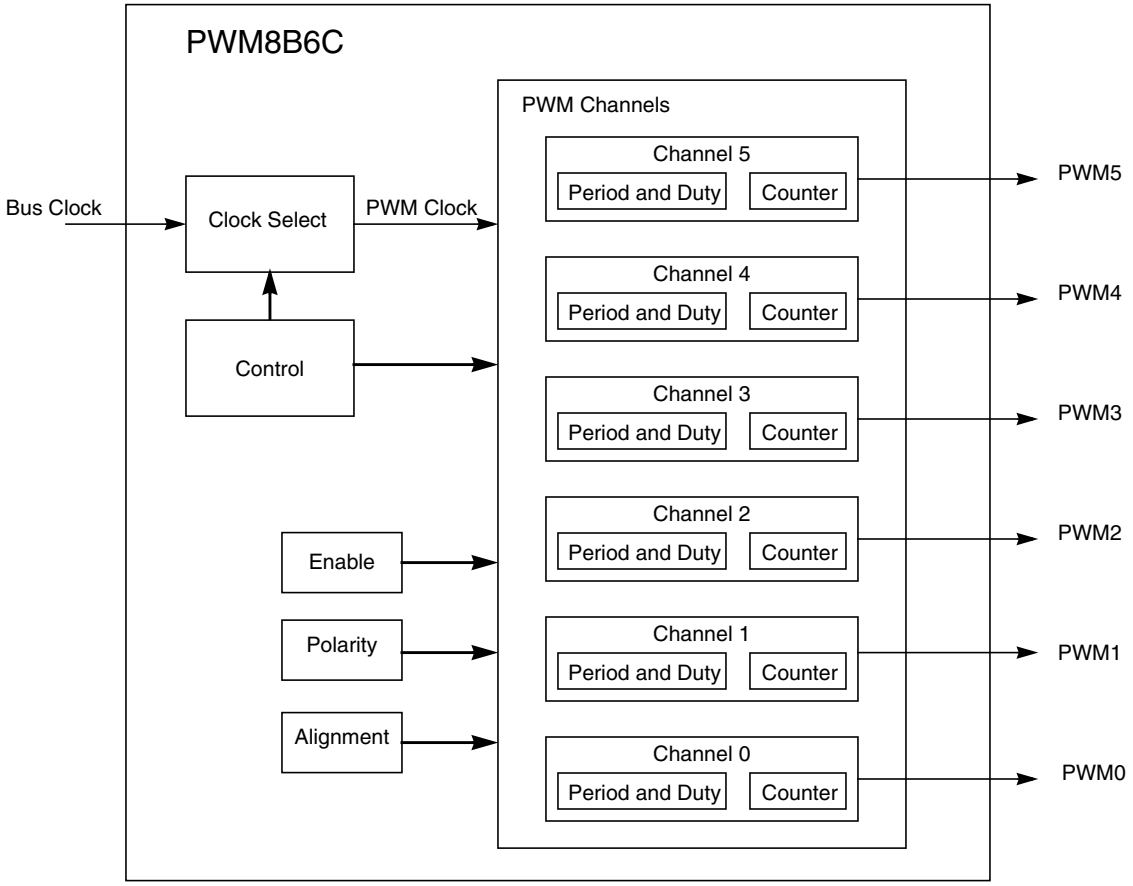


**Figure 12-1. PWM8B6CV1 Block Diagram**

## 12.2 External Signal Description

The PWM8B6CV1 module has a total of six external pins.

### 12.2.1 PWM5 — Pulse Width Modulator Channel 5 Pin

This pin serves as waveform output of PWM channel 5 and as an input for the emergency shutdown feature.

### 12.2.2 PWM4 — Pulse Width Modulator Channel 4 Pin

This pin serves as waveform output of PWM channel 4.

### 12.2.3 PWM3 — Pulse Width Modulator Channel 3 Pin

This pin serves as waveform output of PWM channel 3.

### 12.2.4 PWM2 — Pulse Width Modulator Channel 2 Pin

This pin serves as waveform output of PWM channel 2.

### 12.2.5 PWM1 — Pulse Width Modulator Channel 1 Pin

This pin serves as waveform output of PWM channel 1.

### 12.2.6 PWM0 — Pulse Width Modulator Channel 0 Pin

This pin serves as waveform output of PWM channel 0.

## 12.3 Memory Map and Register Definition

This subsection describes in detail all the registers and register bits in the PWM8B6CV1 module.

The special-purpose registers and register bit functions that would not normally be made available to device end users, such as factory test control registers and reserved registers are clearly identified by means of shading the appropriate portions of address maps and register diagrams. Notes explaining the reasons for restricting access to the registers and functions are also explained in the individual register descriptions.

### 12.3.1 Module Memory Map

The following paragraphs describe the content of the registers in the PWM8B6CV1 module. The base address of the PWM8B6CV1 module is determined at the MCU level when the MCU is defined. The register decode map is fixed and begins at the first address of the module address offset. Table 12-1 shows the registers associated with the PWM and their relative offset from the base address. The register detail description follows the order in which they appear in the register map.

Reserved bits within a register will always read as 0 and the write will be unimplemented. Unimplemented functions are indicated by shading the bit.

Table 12-1 shows the memory map for the PWM8B6CV1 module.

**NOTE**

Register address = base address + address offset, where the base address is defined at the MCU level and the address offset is defined at the module level.

**Table 12-1. PWM8B6CV1 Memory Map**

| Address Offset | Register | Access |
|---|---|---|
| 0x0000 | PWM Enable Register (PWME) | R/W |
| 0x0001 | PWM Polarity Register (PWMPOL) | R/W |
| 0x0002 | PWM Clock Select Register (PWMCLK) | R/W |
| 0x0003 | PWM Prescale Clock Select Register (PWMPRCLK) | R/W |
| 0x0004 | PWM Center Align Enable Register (PWMCAE) | R/W |
| 0x0005 | PWM Control Register (PWMCTL) | R/W |
| 0x0006 | PWM Test Register (PWMTST)[1] | R/W |
| 0x0007 | PWM Prescale Counter Register (PWMPRSC)[2] | R/W |
| 0x0008 | PWM Scale A Register (PWMSCLA) | R/W |
| 0x0009 | PWM Scale B Register (PWMSCLB) | R/W |
| 0x000A | PWM Scale A Counter Register (PWMSCNTA)[3] | R/W |
| 0x000B | PWM Scale B Counter Register (PWMSCNTB)[4] | R/W |
| 0x000C | PWM Channel 0 Counter Register (PWMCNT0) | R/W |
| 0x000D | PWM Channel 1 Counter Register (PWMCNT1) | R/W |
| 0x000E | PWM Channel 2 Counter Register (PWMCNT2) | R/W |
| 0x000F | PWM Channel 3 Counter Register (PWMCNT3) | R/W |
| 0x0010 | PWM Channel 4 Counter Register (PWMCNT4) | R/W |
| 0x0011 | PWM Channel 5 Counter Register (PWMCNT5) | R/W |
| 0x0012 | PWM Channel 0 Period Register (PWMPER0) | R/W |
| 0x0013 | PWM Channel 1 Period Register (PWMPER1) | R/W |
| 0x0014 | PWM Channel 2 Period Register (PWMPER2) | R/W |
| 0x0015 | PWM Channel 3 Period Register (PWMPER3) | R/W |
| 0x0016 | PWM Channel 4 Period Register (PWMPER4) | R/W |
| 0x0017 | PWM Channel 5 Period Register (PWMPER5) | R/W |
| 0x0018 | PWM Channel 0 Duty Register (PWMDTY0) | R/W |
| 0x0019 | PWM Channel 1 Duty Register (PWMDTY1) | R/W |
| 0x001A | PWM Channel 2 Duty Register (PWMDTY2) | R/W |
| 0x001B | PWM Channel 3 Duty Register (PWMDTY3) | R/W |
| 0x001C | PWM Channel 4 Duty Register (PWMDTY4) | R/W |
| 0x001D | PWM Channel 5 Duty Register (PWMDTY5) | R/W |
| 0x001E | PWM Shutdown Register (PWMSDN) | R/W |

1. PWMTST is intended for factory test purposes only.
2. PWMPRSC is intended for factory test purposes only.
3. PWMSCNTA is intended for factory test purposes only.
4. PWMSCNTB is intended for factory test purposes only.

### 12.3.2 Register Descriptions

The following paragraphs describe in detail all the registers and register bits in the PWM8B6CV1 module.

| Register Name | | Bit 7 | 6 | 5 | 4 | 3 | 2 | 1 | Bit 0 |
|---|---|---|---|---|---|---|---|---|---|
| 0x0000 PWME | R | 0 | 0 | PWME5 | PWME4 | PWME3 | PWME2 | PWME1 | PWME0 |
| | W | | | | | | | | |
| 0x0001 PWMPOL | R | 0 | 0 | PPOL5 | PPOL4 | PPOL3 | PPOL2 | PPOL1 | PPOL0 |
| | W | | | | | | | | |
| 0x0002 PWMCLK | R | 0 | 0 | PCLK5 | PCLK4 | PCLK3 | PCLK2 | PCLK1 | PCLK0 |
| | W | | | | | | | | |
| 0x0003 PWMPRCLK | R | 0 | PCKB2 | PCKB1 | PCKB0 | 0 | PCKA2 | PCKA1 | PCKA0 |
| | W | | | | | | | | |
| 0x0004 PWMCAE | R | 0 | 0 | CAE5 | CAE4 | CAE2 | CAE2 | CAE1 | CAE0 |
| | W | | | | | | | | |
| 0x0005 PWMCTL | R | 0 | CON45 | CON23 | CON01 | PSWAI | PFRZ | 0 | 0 |
| | W | | | | | | | | |
| 0x0006 PWMTST | R | 0 | 0 | 0 | 0 | 0 | 0 | 0 | 0 |
| | W | | | | | | | | |
| 0x0007 PWMPRSC | R | 0 | 0 | 0 | 0 | 0 | 0 | 0 | 0 |
| | W | | | | | | | | |
| 0x0008 PWMSCLA | R | Bit 7 | 6 | 5 | 4 | 3 | 2 | 1 | Bit 0 |
| | W | | | | | | | | |
| 0x0009 PWMSCLB | R | Bit 7 | 6 | 5 | 4 | 3 | 2 | 1 | Bit 0 |
| | W | | | | | | | | |
| 0x000A PWMSCNTA | R | 0 | 0 | 0 | 0 | 0 | 0 | 0 | 0 |
| | W | | | | | | | | |
| 0x000B PWMSCNTB | R | 0 | 0 | 0 | 0 | 0 | 0 | 0 | 0 |
| | W | | | | | | | | |
| 0x000C PWMCNT0 | R | Bit 7 | 6 | 5 | 4 | 3 | 2 | 1 | Bit 0 |
| | W | 0 | 0 | 0 | 0 | 0 | 0 | 0 | 0 |
| 0x000D PWMCNT1 | R | Bit 7 | 6 | 5 | 4 | 3 | 2 | 1 | Bit 0 |
| | W | 0 | 0 | 0 | 0 | 0 | 0 | 0 | 0 |
| 0x000E PWMCNT2 | R | Bit 7 | 6 | 5 | 4 | 3 | 2 | 1 | Bit 0 |
| | W | 0 | 0 | 0 | 0 | 0 | 0 | 0 | 0 |

= Unimplemented or Reserved

**Figure 12-2. PWM Register Summary**

| Register Name | | Bit 7 | 6 | 5 | 4 | 3 | 2 | 1 | Bit 0 |
|---|---|---|---|---|---|---|---|---|---|
| 0x000F PWMCNT3 | R | Bit 7 | 6 | 5 | 4 | 3 | 2 | 1 | Bit 0 |
| | W | 0 | 0 | 0 | 0 | 0 | 0 | 0 | 0 |
| 0x0010 PWMCNT4 | R | Bit 7 | 6 | 5 | 4 | 3 | 2 | 1 | Bit 0 |
| | W | 0 | 0 | 0 | 0 | 0 | 0 | 0 | 0 |
| 0x0011 PWMCNT5 | R | Bit 7 | 6 | 5 | 4 | 3 | 2 | 1 | Bit 0 |
| | W | 0 | 0 | 0 | 0 | 0 | 0 | 0 | 0 |
| 0x0012 PWMPER0 | R/W | Bit 7 | 6 | 5 | 4 | 3 | 2 | 1 | Bit 0 |
| 0x0013 PWMPER1 | R/W | Bit 7 | 6 | 5 | 4 | 3 | 2 | 1 | Bit 0 |
| 0x0014 PWMPER2 | R/W | Bit 7 | 6 | 5 | 4 | 3 | 2 | 1 | Bit 0 |
| 0x0015 PWMPER3 | R/W | Bit 7 | 6 | 5 | 4 | 3 | 2 | 1 | Bit 0 |
| 0x0016 PWMPER4 | R/W | Bit 7 | 6 | 5 | 4 | 3 | 2 | 1 | Bit 0 |
| 0x0017 PWMPER5 | R/W | Bit 7 | 6 | 5 | 4 | 3 | 2 | 1 | Bit 0 |
| 0x0018 PWMDTY0 | R/W | Bit 7 | 6 | 5 | 4 | 3 | 2 | 1 | Bit 0 |
| 0x0019 PWMPER1 | R/W | Bit 7 | 6 | 5 | 4 | 3 | 2 | 1 | Bit 0 |
| 0x001A PWMPER2 | R/W | Bit 7 | 6 | 5 | 4 | 3 | 2 | 1 | Bit 0 |
| 0x001B PWMPER3 | R/W | Bit 7 | 6 | 5 | 4 | 3 | 2 | 1 | Bit 0 |
| 0x001C PWMPER4 | R/W | Bit 7 | 6 | 5 | 4 | 3 | 2 | 1 | Bit 0 |
| 0x001D PWMPER5 | R/W | Bit 7 | 6 | 5 | 4 | 3 | 2 | 1 | Bit 0 |
| 0x001E PWMSDB | R | PWMIF | PWMIE | 0 | PWMLVL | 0 | PWM5IN | PWM5INL | PWM5ENA |
| | W | | | PWMRSTRT | | | | | |

= Unimplemented or Reserved

**Figure 12-2. PWM Register Summary (continued)**

### 12.3.2.1 PWM Enable Register (PWME)

Each PWM channel has an enable bit (PWMEx) to start its waveform output. When any of the PWMEx bits are set (PWMEx = 1), the associated PWM output is enabled immediately. However, the actual PWM waveform is not available on the associated PWM output until its clock source begins its next cycle due to the synchronization of PWMEx and the clock source.

**NOTE**

The first PWM cycle after enabling the channel can be irregular.

An exception to this is when channels are concatenated. After concatenated mode is enabled (CONxx bits set in PWMCTL register), enabling/disabling the corresponding 16-bit PWM channel is controlled by the low-order PWMEx bit. In this case, the high-order bytes PWMEx bits have no effect and their corresponding PWM output lines are disabled.

While in run mode, if all six PWM channels are disabled (PWME5–PWME0 = 0), the prescaler counter shuts off for power savings.

Module Base + 0x0000

| | 7 | 6 | 5 | 4 | 3 | 2 | 1 | 0 |
|---|---|---|---|---|---|---|---|---|
| R | 0 | 0 | PWME5 | PWME4 | PWME3 | PWME2 | PWME1 | PWME0 |
| W | | | | | | | | |
| Reset | 0 | 0 | 0 | 0 | 0 | 0 | 0 | 0 |

= Unimplemented or Reserved

**Figure 12-3. PWM Enable Register (PWME)**

Read: anytime

Write: anytime

**Table 12-2. PWME Field Descriptions**

| Field | Description |
|---|---|
| 5<br>PWME5 | **Pulse Width Channel 5 Enable**<br>0 Pulse width channel 5 is disabled.<br>1 Pulse width channel 5 is enabled. The pulse modulated signal becomes available at PWM,output bit 5 when its clock source begins its next cycle. |
| 4<br>PWME4 | **Pulse Width Channel 4 Enable**<br>0 Pulse width channel 4 is disabled.<br>1 Pulse width channel 4 is enabled. The pulse modulated signal becomes available at PWM, output bit 4 when its clock source begins its next cycle. If CON45 = 1, then bit has no effect and PWM output line 4 is disabled. |
| 3<br>PWME3 | **Pulse Width Channel 3 Enable**<br>0 Pulse width channel 3 is disabled.<br>1 Pulse width channel 3 is enabled. The pulse modulated signal becomes available at PWM, output bit 3 when its clock source begins its next cycle. |
| 2<br>PWME2 | **Pulse Width Channel 2 Enable**<br>0 Pulse width channel 2 is disabled.<br>1 Pulse width channel 2 is enabled. The pulse modulated signal becomes available at PWM, output bit 2 when its clock source begins its next cycle. If CON23 = 1, then bit has no effect and PWM output line 2 is disabled. |

**Table 12-2. PWME Field Descriptions (continued)**

| Field | Description |
|---|---|
| 1<br>PWME1 | **Pulse Width Channel 1 Enable**<br>0 Pulse width channel 1 is disabled.<br>1 Pulse width channel 1 is enabled. The pulse modulated signal becomes available at PWM, output bit 1 when its clock source begins its next cycle. |
| 0<br>PWME0 | **Pulse Width Channel 0 Enable**<br>0 Pulse width channel 0 is disabled.<br>1 Pulse width channel 0 is enabled. The pulse modulated signal becomes available at PWM, output bit 0 when its clock source begins its next cycle. If CON01 = 1, then bit has no effect and PWM output line 0 is disabled. |

### 12.3.2.2 PWM Polarity Register (PWMPOL)

The starting polarity of each PWM channel waveform is determined by the associated PPOLx bit in the PWMPOL register. If the polarity bit is 1, the PWM channel output is high at the beginning of the cycle and then goes low when the duty count is reached. Conversely, if the polarity bit is 0 the output starts low and then goes high when the duty count is reached.

Module Base + 0x0001

| | 7 | 6 | 5 | 4 | 3 | 2 | 1 | 0 |
|---|---|---|---|---|---|---|---|---|
| R | 0 | 0 | PPOL5 | PPOL4 | PPOL3 | PPOL2 | PPOL1 | PPOL0 |
| W | | | | | | | | |
| Reset | 0 | 0 | 0 | 0 | 0 | 0 | 0 | 0 |

= Unimplemented or Reserved

**Figure 12-4. PWM Polarity Register (PWMPOL)**

Read: anytime

Write: anytime

**NOTE**

PPOLx register bits can be written anytime. If the polarity is changed while a PWM signal is being generated, a truncated or stretched pulse can occur during the transition

**Table 12-3. PWMPOL Field Descriptions**

| Field | Description |
|---|---|
| 5<br>PPOL5 | **Pulse Width Channel 5 Polarity**<br>0 PWM channel 5 output is low at the beginning of the period, then goes high when the duty count is reached.<br>1 PWM channel 5 output is high at the beginning of the period, then goes low when the duty count is reached. |
| 4<br>PPOL4 | **Pulse Width Channel 4 Polarity**<br>0 PWM channel 4 output is low at the beginning of the period, then goes high when the duty count is reached.<br>1 PWM channel 4 output is high at the beginning of the period, then goes low when the duty count is reached. |

**Table 12-3. PWMPOL Field Descriptions (continued)**

| Field | Description |
|---|---|
| 3<br>PPOL3 | **Pulse Width Channel 3 Polarity**<br>0 PWM channel 3 output is low at the beginning of the period, then goes high when the duty count is reached.<br>1 PWM channel 3 output is high at the beginning of the period, then goes low when the duty count is reached. |
| 2<br>PPOL2 | **Pulse Width Channel 2 Polarity**<br>0 PWM channel 2 output is low at the beginning of the period, then goes high when the duty count is reached.<br>1 PWM channel 2 output is high at the beginning of the period, then goes low when the duty count is reached. |
| 1<br>PPOL1 | **Pulse Width Channel 1 Polarity**<br>0 PWM channel 1 output is low at the beginning of the period, then goes high when the duty count is reached.<br>1 PWM channel 1 output is high at the beginning of the period, then goes low when the duty count is reached. |
| 0<br>PPOL0 | **Pulse Width Channel 0 Polarity**<br>0 PWM channel 0 output is low at the beginning of the period, then goes high when the duty count is reached<br>1 PWM channel 0 output is high at the beginning of the period, then goes low when the duty count is reached. |

### 12.3.2.3 PWM Clock Select Register (PWMCLK)

Each PWM channel has a choice of two clocks to use as the clock source for that channel as described below.

Module Base + 0x0002

| | 7 | 6 | 5 | 4 | 3 | 2 | 1 | 0 |
|---|---|---|---|---|---|---|---|---|
| R | 0 | 0 | PCLK5 | PCLK4 | PCLK3 | PCLK2 | PCLK1 | PCLK0 |
| W | | | | | | | | |
| Reset | 0 | 0 | 0 | 0 | 0 | 0 | 0 | 0 |

= Unimplemented or Reserved

**Figure 12-5. PWM Clock Select Register (PWMCLK)**

Read: anytime

Write: anytime

**NOTE**

Register bits PCLK0 to PCLK5 can be written anytime. If a clock select is changed while a PWM signal is being generated, a truncated or stretched pulse can occur during the transition.

**Table 12-4. PWMCLK Field Descriptions**

| Field | Description |
|---|---|
| 5<br>PCLK5 | **Pulse Width Channel 5 Clock Select**<br>0 Clock A is the clock source for PWM channel 5.<br>1 Clock SA is the clock source for PWM channel 5. |
| 4<br>PCLK4 | **Pulse Width Channel 4 Clock Select**<br>0 Clock A is the clock source for PWM channel 4.<br>1 Clock SA is the clock source for PWM channel 4. |
| 3<br>PCLK3 | **Pulse Width Channel 3 Clock Select**<br>0 Clock B is the clock source for PWM channel 3.<br>1 Clock SB is the clock source for PWM channel 3. |
| 2<br>PCLK2 | **Pulse Width Channel 2 Clock Select**<br>0 Clock B is the clock source for PWM channel 2.<br>1 Clock SB is the clock source for PWM channel 2. |
| 1<br>PCLK1 | **Pulse Width Channel 1 Clock Select**<br>0 Clock A is the clock source for PWM channel 1.<br>1 Clock SA is the clock source for PWM channel 1. |
| 0<br>PCLK0 | **Pulse Width Channel 0 Clock Select**<br>0 Clock A is the clock source for PWM channel 0.<br>1 Clock SA is the clock source for PWM channel 0. |

### 12.3.2.4 PWM Prescale Clock Select Register (PWMPRCLK)

This register selects the prescale clock source for clocks A and B independently.

Module Base + 0x0003

| | 7 | 6 | 5 | 4 | 3 | 2 | 1 | 0 |
|---|---|---|---|---|---|---|---|---|
| R | 0 | PCKB2 | PCKB1 | PCKB0 | 0 | PCKA2 | PCKA1 | PCKA0 |
| W | | | | | | | | |
| Reset | 0 | 0 | 0 | 0 | 0 | 0 | 0 | 0 |

= Unimplemented or Reserved

**Figure 12-6. PWM Prescaler Clock Select Register (PWMPRCLK)**

Read: anytime

Write: anytime

**NOTE**

PCKB2–PCKB0 and PCKA2–PCKA0 register bits can be written anytime. If the clock prescale is changed while a PWM signal is being generated, a truncated or stretched pulse can occur during the transition.

**Table 12-5. PWMPRCLK Field Descriptions**

| Field | Description |
|---|---|
| 6:5<br>PCKB[2:0] | **Prescaler Select for Clock B** — Clock B is 1 of two clock sources which can be used for channels 2 or 3. These three bits determine the rate of clock B, as shown in Table 12-6**.** |
| 2:0<br>PCKA[2:0] | **Prescaler Select for Clock A** — Clock A is 1 of two clock sources which can be used for channels 0, 1, 4, or 5. These three bits determine the rate of clock A, as shown in Table 12-7. |

**Table 12-6. Clock B Prescaler Selects**

| PCKB2 | PCKB1 | PCKB0 | Value of Clock B |
|---|---|---|---|
| 0 | 0 | 0 | Bus Clock |
| 0 | 0 | 1 | Bus Clock / 2 |
| 0 | 1 | 0 | Bus Clock / 4 |
| 0 | 1 | 1 | Bus Clock / 8 |
| 1 | 0 | 0 | Bus Clock / 16 |
| 1 | 0 | 1 | Bus Clock / 32 |
| 1 | 1 | 0 | Bus Clock / 64 |
| 1 | 1 | 1 | Bus Clock / 128 |

**Table 12-7. Clock A Prescaler Selects**

| PCKA2 | PCKA1 | PCKA0 | Value of Clock A |
|---|---|---|---|
| 0 | 0 | 0 | Bus Clock |
| 0 | 0 | 1 | Bus Clock / 2 |
| 0 | 1 | 0 | Bus Clock / 4 |
| 0 | 1 | 1 | Bus Clock / 8 |
| 1 | 0 | 0 | Bus Clock / 16 |
| 1 | 0 | 1 | Bus Clock / 32 |
| 1 | 1 | 0 | Bus Clock / 64 |
| 1 | 1 | 1 | Bus Clock / 128 |

### 12.3.2.5 PWM Center Align Enable Register (PWMCAE)

The PWMCAE register contains six control bits for the selection of center aligned outputs or left aligned outputs for each PWM channel. If the CAEx bit is set to a 1, the corresponding PWM output will be center aligned. If the CAEx bit is cleared, the corresponding PWM output will be left aligned. Reference Section 12.4.2.5, “Left Aligned Outputs,” and Section 12.4.2.6, “Center Aligned Outputs,” for a more detailed description of the PWM output modes.

Module Base + 0x0004

| | 7 | 6 | 5 | 4 | 3 | 2 | 1 | 0 |
|---|---|---|---|---|---|---|---|---|
| R | 0 | 0 | CAE5 | CAE4 | CAE3 | CAE2 | CAE1 | CAE0 |
| W | | | | | | | | |
| Reset | 0 | 0 | 0 | 0 | 0 | 0 | 0 | 0 |

= Unimplemented or Reserved

**Figure 12-7. PWM Center Align Enable Register (PWMCAE)**

Read: anytime

Write: anytime

**NOTE**

Write these bits only when the corresponding channel is disabled.

**Table 12-8. PWMCAE Field Descriptions**

| Field | Description |
|---|---|
| 5<br>CAE5 | **Center Aligned Output Mode on Channel 5**<br>0 Channel 5 operates in left aligned output mode.<br>1 Channel 5 operates in center aligned output mode. |
| 4<br>CAE4 | **Center Aligned Output Mode on Channel 4**<br>0 Channel 4 operates in left aligned output mode.<br>1 Channel 4 operates in center aligned output mode. |
| 3<br>CAE3 | **Center Aligned Output Mode on Channel 3**<br>1 Channel 3 operates in left aligned output mode.<br>1 Channel 3 operates in center aligned output mode. |
| 2<br>CAE2 | **Center Aligned Output Mode on Channel 2**<br>0 Channel 2 operates in left aligned output mode.<br>1 Channel 2 operates in center aligned output mode. |
| 1<br>CAE1 | **Center Aligned Output Mode on Channel 1**<br>0 Channel 1 operates in left aligned output mode.<br>1 Channel 1 operates in center aligned output mode. |
| 0<br>CAE0 | **Center Aligned Output Mode on Channel 0**<br>0 Channel 0 operates in left aligned output mode.<br>1 Channel 0 operates in center aligned output mode. |

### 12.3.2.6 PWM Control Register (PWMCTL)

The PWMCTL register provides for various control of the PWM module.

Module Base + 0x0005

| | 7 | 6 | 5 | 4 | 3 | 2 | 1 | 0 |
|---|---|---|---|---|---|---|---|---|
| R | 0 | CON45 | CON23 | CON01 | PSWAI | PFRZ | 0 | 0 |
| W | | | | | | | | |
| Reset | 0 | 0 | 0 | 0 | 0 | 0 | 0 | 0 |

= Unimplemented or Reserved

**Figure 12-8. PWM Control Register (PWMCTL)**

Read: anytime

Write: anytime

There are three control bits for concatenation, each of which is used to concatenate a pair of PWM channels into one 16-bit channel. When channels 4 and 5 are concatenated, channel 4 registers become the high-order bytes of the double-byte channel. When channels 2 and 3 are concatenated, channel 2 registers become the high-order bytes of the double-byte channel. When channels 0 and 1 are concatenated, channel 0 registers become the high-order bytes of the double-byte channel.

Reference Section 12.4.2.7, “PWM 16-Bit Functions,” for a more detailed description of the concatenation PWM function.

**NOTE**

Change these bits only when both corresponding channels are disabled.

**Table 12-9. PWMCTL Field Descriptions**

| Field | Description |
|---|---|
| 6<br>CON45 | **Concatenate Channels 4 and 5**<br>0 Channels 4 and 5 are separate 8-bit PWMs.<br>1 Channels 4 and 5 are concatenated to create one 16-bit PWM channel. Channel 4 becomes the high-order byte and channel 5 becomes the low-order byte. Channel 5 output pin is used as the output for this 16-bit PWM (bit 5 of port PWMP). Channel 5 clock select control bit determines the clock source, channel 5 polarity bit determines the polarity, channel 5 enable bit enables the output and channel 5 center aligned enable bit determines the output mode. |
| 5<br>CON23 | **Concatenate Channels 2 and 3**<br>0 Channels 2 and 3 are separate 8-bit PWMs.<br>1 Channels 2 and 3 are concatenated to create one 16-bit PWM channel. Channel 2 becomes the high-order byte and channel 3 becomes the low-order byte. Channel 3 output pin is used as the output for this 16-bit PWM (bit 3 of port PWMP). Channel 3 clock select control bit determines the clock source, channel 3 polarity bit determines the polarity, channel 3 enable bit enables the output and channel 3 center aligned enable bit determines the output mode. |
| 4<br>CON01 | **Concatenate Channels 0 and 1**<br>0 Channels 0 and 1 are separate 8-bit PWMs.<br>1 Channels 0 and 1 are concatenated to create one 16-bit PWM channel. Channel 0 becomes the high-order byte and channel 1 becomes the low-order byte. Channel 1 output pin is used as the output for this 16-bit PWM (bit 1 of port PWMP). Channel 1 clock select control bit determines the clock source, channel 1 polarity bit determines the polarity, channel 1 enable bit enables the output and channel 1 center aligned enable bit determines the output mode. |
| 3<br>PSWAI | **PWM Stops in Wait Mode** — Enabling this bit allows for lower power consumption in wait mode by disabling the input clock to the prescaler.<br>0 Allow the clock to the prescaler to continue while in wait mode.<br>1 Stop the input clock to the prescaler whenever the MCU is in wait mode. |
| 2<br>PFRZ | **PWM Counters Stop in Freeze Mode** — In freeze mode, there is an option to disable the input clock to the prescaler by setting the PFRZ bit in the PWMCTL register. If this bit is set, whenever the MCU is in freeze mode the input clock to the prescaler is disabled. This feature is useful during emulation as it allows the PWM function to be suspended. In this way, the counters of the PWM can be stopped while in freeze mode so that after normal program flow is continued, the counters are re-enabled to simulate real-time operations. Because the registers remain accessible in this mode, to re-enable the prescaler clock, either disable the PFRZ bit or exit freeze mode.<br>0 Allow PWM to continue while in freeze mode.<br>1 Disable PWM input clock to the prescaler whenever the part is in freeze mode. This is useful for emulation. |

### 12.3.2.7 Reserved Register (PWMTST)

This register is reserved for factory testing of the PWM module and is not available in normal modes.

Module Base + 0x0006

| | 7 | 6 | 5 | 4 | 3 | 2 | 1 | 0 |
|---|---|---|---|---|---|---|---|---|
| R | 0 | 0 | 0 | 0 | 0 | 0 | 0 | 0 |
| W | | | | | | | | |
| Reset | 0 | 0 | 0 | 0 | 0 | 0 | 0 | 0 |

= Unimplemented or Reserved

**Figure 12-9. Reserved Register (PWMTST)**

Read: always read 0x0000 in normal modes

Write: unimplemented in normal modes

**NOTE**

Writing to this register when in special modes can alter the PWM functionality.

### 12.3.2.8 Reserved Register (PWMPRSC)

This register is reserved for factory testing of the PWM module and is not available in normal modes.

Module Base + 0x0007

| | 7 | 6 | 5 | 4 | 3 | 2 | 1 | 0 |
|---|---|---|---|---|---|---|---|---|
| R | 0 | 0 | 0 | 0 | 0 | 0 | 0 | 0 |
| W | | | | | | | | |
| Reset | 0 | 0 | 0 | 0 | 0 | 0 | 0 | 0 |

= Unimplemented or Reserved

**Figure 12-10. Reserved Register (PWMPRSC)**

Read: always read 0x0000 in normal modes

Write: unimplemented in normal modes

**NOTE**

Writing to this register when in special modes can alter the PWM functionality.

### 12.3.2.9 PWM Scale A Register (PWMSCLA)

PWMSCLA is the programmable scale value used in scaling clock A to generate clock SA. Clock SA is generated by taking clock A, dividing it by the value in the PWMSCLA register and dividing that by two.

Clock SA = Clock A / (2 * PWMSCLA)

**NOTE**

When PWMSCLA = 0x0000, PWMSCLA value is considered a full scale value of 256. Clock A is thus divided by 512.

Any value written to this register will cause the scale counter to load the new scale value (PWMSCLA).

Module Base + 0x0008

| | 7 | 6 | 5 | 4 | 3 | 2 | 1 | 0 |
|---|---|---|---|---|---|---|---|---|
| R<br>W | Bit 7 | 6 | 5 | 4 | 3 | 2 | 1 | Bit 0 |
| Reset | 0 | 0 | 0 | 0 | 0 | 0 | 0 | 0 |

**Figure 12-11. PWM Scale A Register (PWMSCLA)**

Read: anytime

Write: anytime (causes the scale counter to load the PWMSCLA value)

### 12.3.2.10 PWM Scale B Register (PWMSCLB)

PWMSCLB is the programmable scale value used in scaling clock B to generate clock SB. Clock SB is generated by taking clock B, dividing it by the value in the PWMSCLB register and dividing that by two.

Clock SB = Clock B / (2 * PWMSCLB)

**NOTE**

When PWMSCLB = 0x0000, PWMSCLB value is considered a full scale value of 256. Clock B is thus divided by 512.

Any value written to this register will cause the scale counter to load the new scale value (PWMSCLB).

Module Base + 0x0009

| | 7 | 6 | 5 | 4 | 3 | 2 | 1 | 0 |
|---|---|---|---|---|---|---|---|---|
| R<br>W | Bit 7 | 6 | 5 | 4 | 3 | 2 | 1 | Bit 0 |
| Reset | 0 | 0 | 0 | 0 | 0 | 0 | 0 | 0 |

**Figure 12-12. PWM Scale B Register (PWMSCLB)**

Read: anytime

Write: anytime (causes the scale counter to load the PWMSCLB value).

### 12.3.2.11 Reserved Registers (PWMSCNTx)

The registers PWMSCNTA and PWMSCNTB are reserved for factory testing of the PWM module and are not available in normal modes.

Module Base + 0x000A

| | 7 | 6 | 5 | 4 | 3 | 2 | 1 | 0 |
|---|---|---|---|---|---|---|---|---|
| R | 0 | 0 | 0 | 0 | 0 | 0 | 0 | 0 |
| W | | | | | | | | |
| Reset | 0 | 0 | 0 | 0 | 0 | 0 | 0 | 0 |

= Unimplemented or Reserved

**Figure 12-13. Reserved Register (PWMSCNTA)**

Module Base + 0x000B

| | 7 | 6 | 5 | 4 | 3 | 2 | 1 | 0 |
|---|---|---|---|---|---|---|---|---|
| R | 0 | 0 | 0 | 0 | 0 | 0 | 0 | 0 |
| W | | | | | | | | |
| Reset | 0 | 0 | 0 | 0 | 0 | 0 | 0 | 0 |

= Unimplemented or Reserved

**Figure 12-14. Reserved Register (PWMSCNTB)**

Read: always read 0x0000 in normal modes

Write: unimplemented in normal modes

**NOTE**

Writing to these registers when in special modes can alter the PWM functionality.

### 12.3.2.12 PWM Channel Counter Registers (PWMCNTx)

Each channel has a dedicated 8-bit up/down counter which runs at the rate of the selected clock source. The counter can be read at any time without affecting the count or the operation of the PWM channel. In left aligned output mode, the counter counts from 0 to the value in the period register – 1. In center aligned output mode, the counter counts from 0 up to the value in the period register and then back down to 0.

Any value written to the counter causes the counter to reset to 0x0000, the counter direction to be set to up, the immediate load of both duty and period registers with values from the buffers, and the output to change according to the polarity bit. The counter is also cleared at the end of the effective period (see Section 12.4.2.5, "Left Aligned Outputs," and Section 12.4.2.6, "Center Aligned Outputs," for more details). When the channel is disabled (PWMEx = 0), the PWMCNTx register does not count. When a channel becomes enabled (PWMEx = 1), the associated PWM counter starts at the count in the PWMCNTx register. For more detailed information on the operation of the counters, reference Section 12.4.2.4, "PWM Timer Counters."

In concatenated mode, writes to the 16-bit counter by using a 16-bit access or writes to either the low- or high-order byte of the counter will reset the 16-bit counter. Reads of the 16-bit counter must be made by 16-bit access to maintain data coherency.

**NOTE**

*Writing to the counter while the channel is enabled can cause an irregular PWM cycle to occur.*

Module Base + 0x000C

| | 7 | 6 | 5 | 4 | 3 | 2 | 1 | 0 |
|---|---|---|---|---|---|---|---|---|
| R | Bit 7 | 6 | 5 | 4 | 3 | 2 | 1 | Bit 0 |
| W | 0 | 0 | 0 | 0 | 0 | 0 | 0 | 0 |
| Reset | 0 | 0 | 0 | 0 | 0 | 0 | 0 | 0 |

**Figure 12-15. PWM Channel Counter Registers (PWMCNT0)**

Module Base + 0x000D

| | 7 | 6 | 5 | 4 | 3 | 2 | 1 | 0 |
|---|---|---|---|---|---|---|---|---|
| R | Bit 7 | 6 | 5 | 4 | 3 | 2 | 1 | Bit 0 |
| W | 0 | 0 | 0 | 0 | 0 | 0 | 0 | 0 |
| Reset | 0 | 0 | 0 | 0 | 0 | 0 | 0 | 0 |

**Figure 12-16. PWM Channel Counter Registers (PWMCNT1)**

Module Base + 0x000E

| | 7 | 6 | 5 | 4 | 3 | 2 | 1 | 0 |
|---|---|---|---|---|---|---|---|---|
| R | Bit 7 | 6 | 5 | 4 | 3 | 2 | 1 | Bit 0 |
| W | 0 | 0 | 0 | 0 | 0 | 0 | 0 | 0 |
| Reset | 0 | 0 | 0 | 0 | 0 | 0 | 0 | 0 |

**Figure 12-17. PWM Channel Counter Registers (PWMCNT2)**

Module Base + 0x000F

| | 7 | 6 | 5 | 4 | 3 | 2 | 1 | 0 |
|---|---|---|---|---|---|---|---|---|
| R | Bit 7 | 6 | 5 | 4 | 3 | 2 | 1 | Bit 0 |
| W | 0 | 0 | 0 | 0 | 0 | 0 | 0 | 0 |
| Reset | 0 | 0 | 0 | 0 | 0 | 0 | 0 | 0 |

**Figure 12-18. PWM Channel Counter Registers (PWMCNT3)**

Module Base + 0x00010

| | 7 | 6 | 5 | 4 | 3 | 2 | 1 | 0 |
|---|---|---|---|---|---|---|---|---|
| R | Bit 7 | 6 | 5 | 4 | 3 | 2 | 1 | Bit 0 |
| W | 0 | 0 | 0 | 0 | 0 | 0 | 0 | 0 |
| Reset | 0 | 0 | 0 | 0 | 0 | 0 | 0 | 0 |

**Figure 12-19. PWM Channel Counter Registers (PWMCNT4)**

Module Base + 0x00011

| | 7 | 6 | 5 | 4 | 3 | 2 | 1 | 0 |
|---|---|---|---|---|---|---|---|---|
| R | Bit 7 | 6 | 5 | 4 | 3 | 2 | 1 | Bit 0 |
| W | 0 | 0 | 0 | 0 | 0 | 0 | 0 | 0 |
| Reset | 0 | 0 | 0 | 0 | 0 | 0 | 0 | 0 |

**Figure 12-20. PWM Channel Counter Registers (PWMCNT5)**

Read: anytime

Write: anytime (any value written causes PWM counter to be reset to 0x0000).

### 12.3.2.13 PWM Channel Period Registers (PWMPERx)

There is a dedicated period register for each channel. The value in this register determines the period of the associated PWM channel.

The period registers for each channel are double buffered so that if they change while the channel is enabled, the change will NOT take effect until one of the following occurs:

- The effective period ends
- The counter is written (counter resets to 0x0000)

- The channel is disabled

In this way, the output of the PWM will always be either the old waveform or the new waveform, not some variation in between. If the channel is not enabled, then writes to the period register will go directly to the latches as well as the buffer.

**NOTE**

Reads of this register return the most recent value written. Reads do not necessarily return the value of the currently active period due to the double buffering scheme.

Reference Section 12.4.2.3, “PWM Period and Duty,” for more information.

To calculate the output period, take the selected clock source period for the channel of interest (A, B, SA, or SB) and multiply it by the value in the period register for that channel:

- Left aligned output (CAEx = 0)
- PWMx period = channel clock period * PWMPERx center aligned output (CAEx = 1)
- PWMx period = channel clock period * (2 * PWMPERx)

For boundary case programming values, please refer to Section 12.4.2.8, “PWM Boundary Cases.”

Module Base + 0x0012

| | 7 | 6 | 5 | 4 | 3 | 2 | 1 | 0 |
|---|---|---|---|---|---|---|---|---|
| R/W | Bit 7 | 6 | 5 | 4 | 3 | 2 | 1 | Bit 0 |
| Reset | 0 | 0 | 0 | 0 | 0 | 0 | 0 | 0 |

**Figure 12-21. PWM Channel Period Registers (PWMPER0)**

Module Base + 0x0013

| | 7 | 6 | 5 | 4 | 3 | 2 | 1 | 0 |
|---|---|---|---|---|---|---|---|---|
| R/W | Bit 7 | 6 | 5 | 4 | 3 | 2 | 1 | Bit 0 |
| Reset | 0 | 0 | 0 | 0 | 0 | 0 | 0 | 0 |

**Figure 12-22. PWM Channel Period Registers (PWMPER1)**

Module Base + 0x0014

| | 7 | 6 | 5 | 4 | 3 | 2 | 1 | 0 |
|---|---|---|---|---|---|---|---|---|
| R/W | Bit 7 | 6 | 5 | 4 | 3 | 2 | 1 | Bit 0 |
| Reset | 0 | 0 | 0 | 0 | 0 | 0 | 0 | 0 |

**Figure 12-23. PWM Channel Period Registers (PWMPER2)**

Module Base + 0x0015

| | 7 | 6 | 5 | 4 | 3 | 2 | 1 | 0 |
|---|---|---|---|---|---|---|---|---|
| R/W | Bit 7 | 6 | 5 | 4 | 3 | 2 | 1 | Bit 0 |
| Reset | 0 | 0 | 0 | 0 | 0 | 0 | 0 | 0 |

**Figure 12-24. PWM Channel Period Registers (PWMPER3)**

Module Base + 0x0016

| | 7 | 6 | 5 | 4 | 3 | 2 | 1 | 0 |
|---|---|---|---|---|---|---|---|---|
| R/W | Bit 7 | 6 | 5 | 4 | 3 | 2 | 1 | Bit 0 |
| Reset | 0 | 0 | 0 | 0 | 0 | 0 | 0 | 0 |

**Figure 12-25. PWM Channel Period Registers (PWMPER4)**

Module Base + 0x0017

| | 7 | 6 | 5 | 4 | 3 | 2 | 1 | 0 |
|---|---|---|---|---|---|---|---|---|
| R/W | Bit 7 | 6 | 5 | 4 | 3 | 2 | 1 | Bit 0 |
| Reset | 0 | 0 | 0 | 0 | 0 | 0 | 0 | 0 |

**Figure 12-26. PWM Channel Period Registers (PWMPER5)**

Read: anytime

Write: anytime

### 12.3.2.14 PWM Channel Duty Registers (PWMDTYx)

There is a dedicated duty register for each channel. The value in this register determines the duty of the associated PWM channel. The duty value is compared to the counter and if it is equal to the counter value a match occurs and the output changes state.

The duty registers for each channel are double buffered so that if they change while the channel is enabled, the change will NOT take effect until one of the following occurs:

- The effective period ends
- The counter is written (counter resets to 0x0000)
- The channel is disabled

In this way, the output of the PWM will always be either the old duty waveform or the new duty waveform, not some variation in between. If the channel is not enabled, then writes to the duty register will go directly to the latches as well as the buffer.

**NOTE**

Reads of this register return the most recent value written. Reads do not necessarily return the value of the currently active duty due to the double buffering scheme.

Reference Section 12.4.2.3, “PWM Period and Duty,” for more information.

**NOTE**

Depending on the polarity bit, the duty registers will contain the count of either the high time or the low time. If the polarity bit is 1, the output starts high and then goes low when the duty count is reached, so the duty registers contain a count of the high time. If the polarity bit is 0, the output starts low and then goes high when the duty count is reached, so the duty registers contain a count of the low time.

To calculate the output duty cycle (high time as a % of period) for a particular channel:

- Polarity = 0 (PPOLx = 0)
  Duty cycle = [(PWMPERx PWMDTYx)/PWMPERx] * 100%
- Polarity = 1 (PPOLx = 1)
  Duty cycle = [PWMDTYx / PWMPERx] * 100%
- For boundary case programming values, please refer to Section 12.4.2.8, “PWM Boundary Cases.”

Module Base + 0x0018

| | 7 | 6 | 5 | 4 | 3 | 2 | 1 | 0 |
|---|---|---|---|---|---|---|---|---|
| R/W | Bit 7 | 6 | 5 | 4 | 3 | 2 | 1 | Bit 0 |
| Reset | 1 | 1 | 1 | 1 | 1 | 1 | 1 | 1 |

**Figure 12-27. PWM Channel Duty Registers (PWMDTY0)**

Module Base + 0x0019

| | 7 | 6 | 5 | 4 | 3 | 2 | 1 | 0 |
|---|---|---|---|---|---|---|---|---|
| R/W | Bit 7 | 6 | 5 | 4 | 3 | 2 | 1 | Bit 0 |
| Reset | 1 | 1 | 1 | 1 | 1 | 1 | 1 | 1 |

**Figure 12-28. PWM Channel Duty Registers (PWMDTY1)**

Module Base + 0x001A

| | 7 | 6 | 5 | 4 | 3 | 2 | 1 | 0 |
|---|---|---|---|---|---|---|---|---|
| R/W | Bit 7 | 6 | 5 | 4 | 3 | 2 | 1 | Bit 0 |
| Reset | 1 | 1 | 1 | 1 | 1 | 1 | 1 | 1 |

**Figure 12-29. PWM Channel Duty Registers (PWMDTY2)**

Module Base + 0x001B

| | 7 | 6 | 5 | 4 | 3 | 2 | 1 | 0 |
|---|---|---|---|---|---|---|---|---|
| R/W | Bit 7 | 6 | 5 | 4 | 3 | 2 | 1 | Bit 0 |
| Reset | 1 | 1 | 1 | 1 | 1 | 1 | 1 | 1 |

**Figure 12-30. PWM Channel Duty Registers (PWMDTY3)**

Module Base + 0x001C

| | 7 | 6 | 5 | 4 | 3 | 2 | 1 | 0 |
|---|---|---|---|---|---|---|---|---|
| R/W | Bit 7 | 6 | 5 | 4 | 3 | 2 | 1 | Bit 0 |
| Reset | 1 | 1 | 1 | 1 | 1 | 1 | 1 | 1 |

**Figure 12-31. PWM Channel Duty Registers (PWMDTY4)**

Module Base + 0x001D

| | 7 | 6 | 5 | 4 | 3 | 2 | 1 | 0 |
|---|---|---|---|---|---|---|---|---|
| R/W | Bit 7 | 6 | 5 | 4 | 3 | 2 | 1 | Bit 0 |
| Reset | 1 | 1 | 1 | 1 | 1 | 1 | 1 | 1 |

**Figure 12-32. PWM Channel Duty Registers (PWMDTY5)**

Read: anytime

Write: anytime

### 12.3.2.15 PWM Shutdown Register (PWMSDN)

The PWMSDN register provides for the shutdown functionality of the PWM module in the emergency cases.

Module Base + 0x00E

| | 7 | 6 | 5 | 4 | 3 | 2 | 1 | 0 |
|---|---|---|---|---|---|---|---|---|
| R | PWMIF | PWMIE | 0 | PWMLVL | 0 | PWM5IN | PWM5INL | PWM5ENA |
| W | | | PWMRSTRT | | | | | |
| Reset | 0 | 0 | 0 | 0 | 0 | 0 | 0 | 0 |

= Unimplemented or Reserved

**Figure 12-33. PWM Shutdown Register (PWMSDN)**

Read: anytime

Write: anytime

**Table 12-10. PWMSDN Field Descriptions**

| Field | Description |
|---|---|
| 7<br>PWMIF | **PWM Interrupt Flag** — Any change from passive to asserted (active) state or from active to passive state will be flagged by setting the PWMIF flag = 1. The flag is cleared by writing a logic 1 to it. Writing a 0 has no effect.<br>0 No change on PWM5IN input.<br>1 Change on PWM5IN input |
| 6<br>PWMIE | **PWM Interrupt Enable** — If interrupt is enabled an interrupt to the CPU is asserted.<br>0 PWM interrupt is disabled.<br>1 PWM interrupt is enabled. |
| 5<br>PWMRSTRT | **PWM Restart** — The PWM can only be restarted if the PWM channel input 5 is deasserted. After writing a logic 1 to the PWMRSTRT bit (trigger event) the PWM channels start running after the corresponding counter passes next “counter = 0” phase.<br>Also, if the PWM5ENA bit is reset to 0, the PWM do not start before the counter passes 0x0000.<br>The bit is always read as 0. |
| 4<br>PWMLVL | **PWM Shutdown Output Level** — If active level as defined by the PWM5IN input, gets asserted all enabled PWM channels are immediately driven to the level defined by PWMLVL.<br>0 PWM outputs are forced to 0<br>1 PWM outputs are forced to 1. |
| 2<br>PWM5IN | **PWM Channel 5 Input Status** — This reflects the current status of the PWM5 pin. |
| 1<br>PWM5INL | **PWM Shutdown Active Input Level for Channel 5** — If the emergency shutdown feature is enabled (PWM5ENA = 1), this bit determines the active level of the PWM5 channel.<br>0 Active level is low<br>1 Active level is high |
| 0<br>PWM5ENA | **PWM Emergency Shutdown Enable** — If this bit is logic 1 the pin associated with channel 5 is forced to input and the emergency shutdown feature is enabled. All the other bits in this register are meaningful only if PWM5ENA = 1.<br>0 PWM emergency feature disabled.<br>1 PWM emergency feature is enabled. |

## 12.4 Functional Description

### 12.4.1 PWM Clock Select

There are four available clocks called clock A, clock B, clock SA (scaled A), and clock SB (scaled B). These four clocks are based on the bus clock**.**

Clock A and B can be software selected to be 1, 1/2, 1/4, 1/8,..., 1/64, 1/128 times the bus clock. Clock SA uses clock A as an input and divides it further with a reloadable counter. Similarly, clock SB uses clock B as an input and divides it further with a reloadable counter. The rates available for clock SA are software selectable to be clock A divided by 2, 4, 6, 8, ..., or 512 in increments of divide by 2. Similar rates are available for clock SB. Each PWM channel has the capability of selecting one of two clocks, either the pre-scaled clock (clock A or B) or the scaled clock (clock SA or SB).

The block diagram in Figure 12-34 shows the four different clocks and how the scaled clocks are created.

#### 12.4.1.1 Prescale

The input clock to the PWM prescaler is the bus clock. It can be disabled whenever the part is in freeze mode by setting the PFRZ bit in the PWMCTL register. If this bit is set, whenever the MCU is in freeze mode the input clock to the prescaler is disabled. This is useful for emulation in order to freeze the PWM. The input clock can also be disabled when all six PWM channels are disabled (PWME5–PWME0 = 0) This is useful for reducing power by disabling the prescale counter.

Clock A and clock B are scaled values of the input clock. The value is software selectable for both clock A and clock B and has options of 1, 1/2, 1/4, 1/8, 1/16, 1/32, 1/64, or 1/128 times the bus clock. The value selected for clock A is determined by the PCKA2, PCKA1, and PCKA0 bits in the PWMPRCLK register. The value selected for clock B is determined by the PCKB2, PCKB1, and PCKB0 bits also in the PWMPRCLK register.

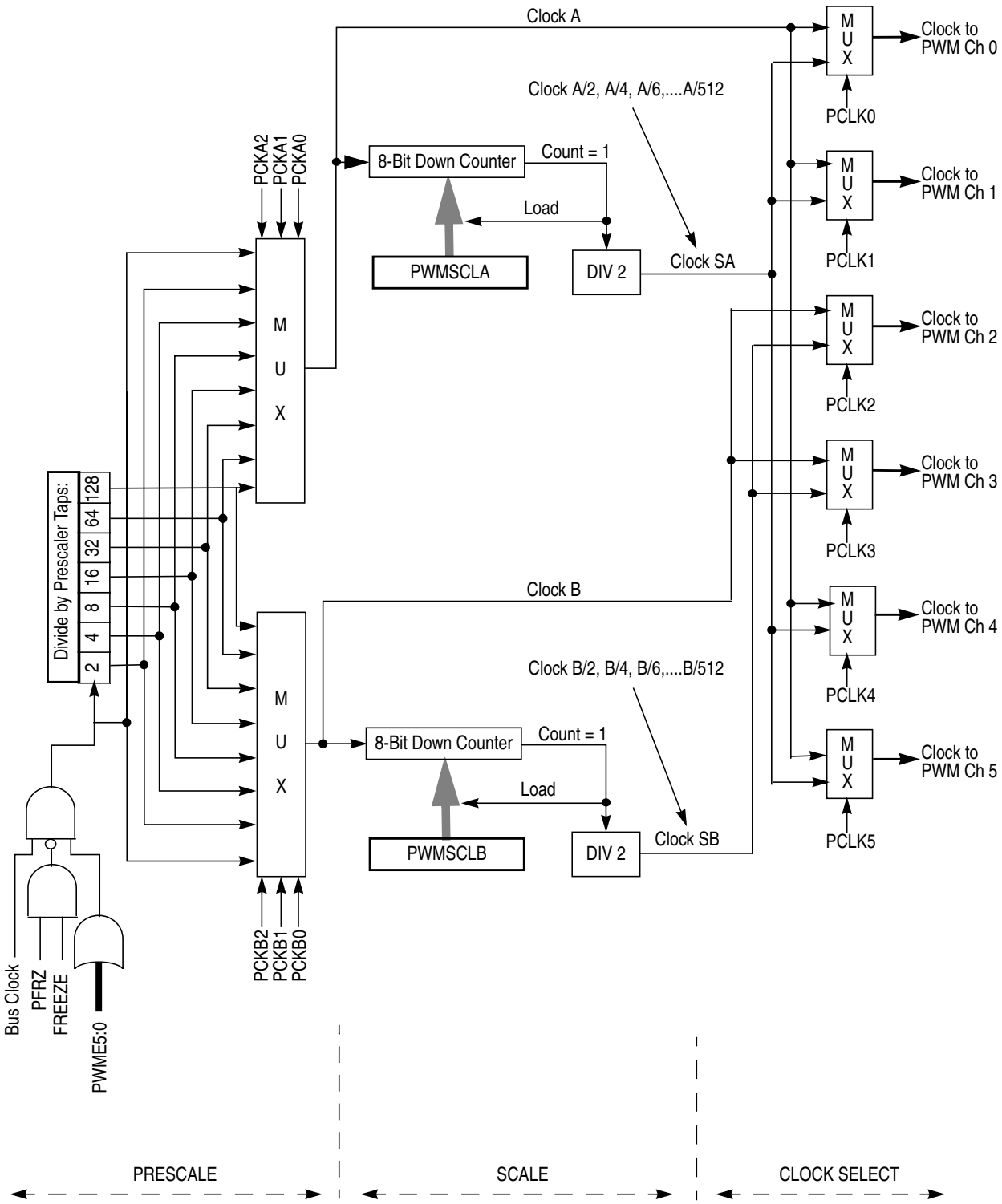


**Figure 12-34. PWM Clock Select Block Diagram**

#### 12.4.1.2 Clock Scale

The scaled A clock uses clock A as an input and divides it further with a user programmable value and then divides this by 2. The scaled B clock uses clock B as an input and divides it further with a user programmable value and then divides this by 2. The rates available for clock SA are software selectable to be clock A divided by 2, 4, 6, 8, ..., or 512 in increments of divide by 2. Similar rates are available for clock SB.

Clock A is used as an input to an 8-bit down counter. This down counter loads a user programmable scale value from the scale register (PWMSCLA). When the down counter reaches 1, two things happen; a pulse is output and the 8-bit counter is re-loaded. The output signal from this circuit is further divided by two.

This gives a greater range with only a slight reduction in granularity. Clock SA equals clock A divided by two times the value in the PWMSCLA register.

**NOTE**

Clock SA = Clock A / (2 * PWMSCLA)

When PWMSCLA = 0x0000, PWMSCLA value is considered a full scale value of 256. Clock A is thus divided by 512.

Similarly, clock B is used as an input to an 8-bit down counter followed by a divide by two producing clock SB. Thus, clock SB equals clock B divided by two times the value in the PWMSCLB register.

**NOTE**

Clock SB = Clock B / (2 * PWMSCLB)

When PWMSCLB = 0x0000, PWMSCLB value is considered a full scale value of 256. Clock B is thus divided by 512.

As an example, consider the case in which the user writes 0x00FF into the PWMSCLA register. Clock A for this case will be bus clock divided by 4. A pulse will occur at a rate of once every 255 x 4 bus cycles. Passing this through the divide by two circuit produces a clock signal at a bus clock divided by 2040 rate. Similarly, a value of 0x0001 in the PWMSCLA register when clock A is bus clock divided by 4 will produce a bus clock divided by 8 rate.

Writing to PWMSCLA or PWMSCLB causes the associated 8-bit down counter to be re-loaded. Otherwise, when changing rates the counter would have to count down to 0x0001 before counting at the proper rate. Forcing the associated counter to re-load the scale register value every time PWMSCLA or PWMSCLB is written prevents this.

**NOTE**

Writing to the scale registers while channels are operating can cause irregularities in the PWM outputs.

#### 12.4.1.3 Clock Select

Each PWM channel has the capability of selecting one of two clocks. For channels 0, 1, 4, and 5 the clock choices are clock A or clock SA. For channels 2 and 3 the choices are clock B or clock SB. The clock selection is done with the PCLKx control bits in the PWMCLK register.

**NOTE**

Changing clock control bits while channels are operating can cause irregularities in the PWM outputs.

### 12.4.2 PWM Channel Timers

The main part of the PWM module are the actual timers. Each of the timer channels has a counter, a period register and a duty register (each are 8 bit). The waveform output period is controlled by a match between the period register and the value in the counter. The duty is controlled by a match between the duty register and the counter value and causes the state of the output to change during the period. The starting polarity of the output is also selectable on a per channel basis. Figure 12-35 shows a block diagram for PWM timer.

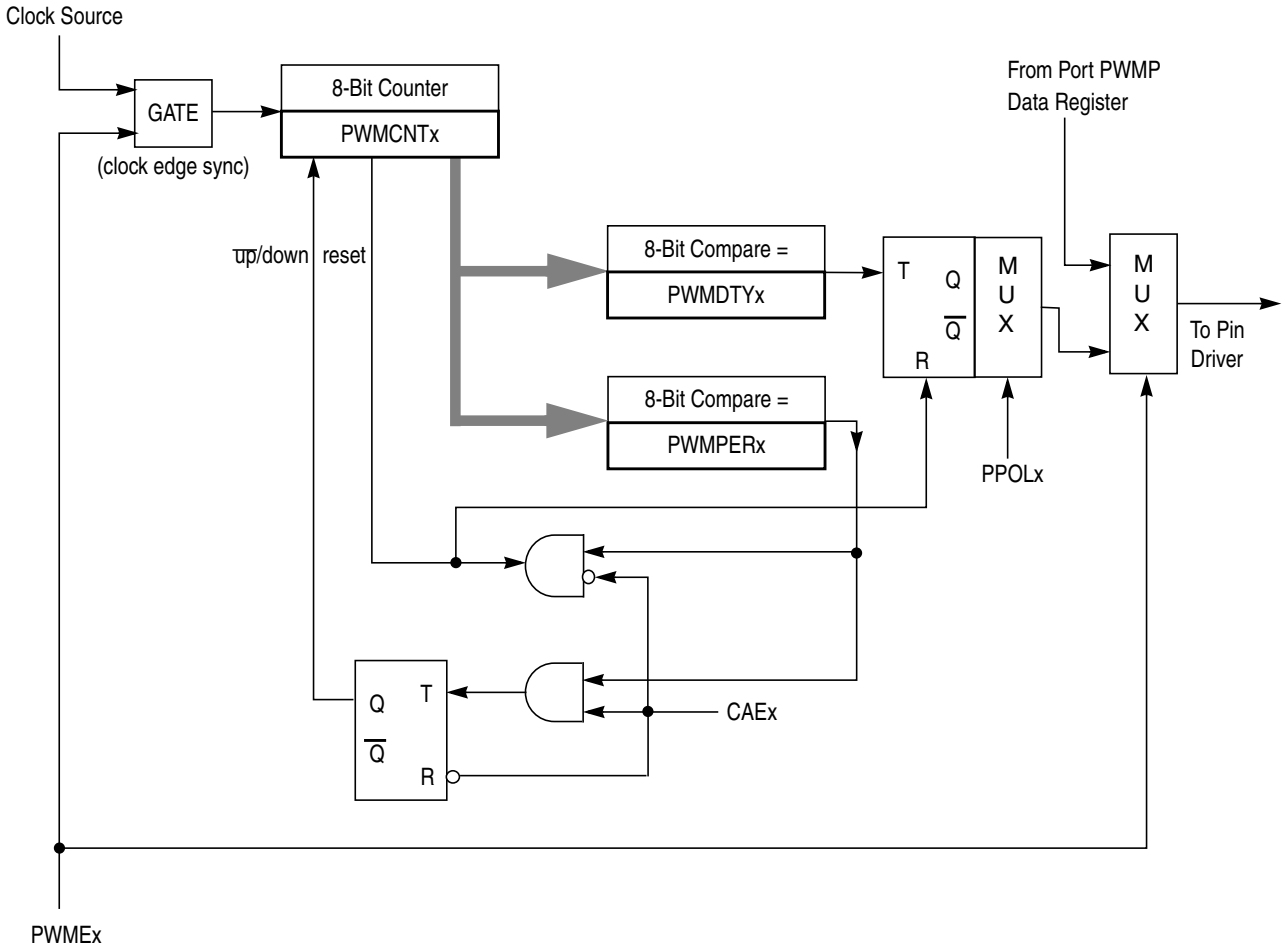


**Figure 12-35. PWM Timer Channel Block Diagram**

#### 12.4.2.1 PWM Enable

Each PWM channel has an enable bit (PWMEx) to start its waveform output. When any of the PWMEx bits are set (PWMEx = 1), the associated PWM output signal is enabled immediately. However, the actual PWM waveform is not available on the associated PWM output until its clock source begins its next cycle due to the synchronization of PWMEx and the clock source. An exception to this is when channels are concatenated. Refer to Section 12.4.2.7, "PWM 16-Bit Functions," for more detail.

**NOTE**

The first PWM cycle after enabling the channel can be irregular.

On the front end of the PWM timer, the clock is enabled to the PWM circuit by the PWMEx bit being high. There is an edge-synchronizing circuit to guarantee that the clock will only be enabled or disabled at an edge. When the channel is disabled (PWMEx = 0), the counter for the channel does not count.

#### 12.4.2.2 PWM Polarity

Each channel has a polarity bit to allow starting a waveform cycle with a high or low signal. This is shown on the block diagram as a mux select of either the Q output or the $\overline{Q}$ output of the PWM output flip-flop. When one of the bits in the PWMPOL register is set, the associated PWM channel output is high at the beginning of the waveform, then goes low when the duty count is reached. Conversely, if the polarity bit is 0, the output starts low and then goes high when the duty count is reached.

#### 12.4.2.3 PWM Period and Duty

Dedicated period and duty registers exist for each channel and are double buffered so that if they change while the channel is enabled, the change will NOT take effect until one of the following occurs:

- The effective period ends
- The counter is written (counter resets to 0x0000)
- The channel is disabled

In this way, the output of the PWM will always be either the old waveform or the new waveform, not some variation in between. If the channel is not enabled, then writes to the period and duty registers will go directly to the latches as well as the buffer.

A change in duty or period can be forced into effect "immediately" by writing the new value to the duty and/or period registers and then writing to the counter. This forces the counter to reset and the new duty and/or period values to be latched. In addition, because the counter is readable it is possible to know where the count is with respect to the duty value and software can be used to make adjustments.

**NOTE**

When forcing a new period or duty into effect immediately, an irregular PWM cycle can occur.

Depending on the polarity bit, the duty registers will contain the count of either the high time or the low time.

#### 12.4.2.4 PWM Timer Counters

Each channel has a dedicated 8-bit up/down counter which runs at the rate of the selected clock source (reference Figure 12-34 for the available clock sources and rates). The counter compares to two registers, a duty register and a period register as shown in Figure 12-35. When the PWM counter matches the duty register the output flip-flop changes state causing the PWM waveform to also change state. A match between the PWM counter and the period register behaves differently depending on what output mode is selected as shown in Figure 12-35 and described in Section 12.4.2.5, "Left Aligned Outputs," and Section 12.4.2.6, "Center Aligned Outputs."

Each channel counter can be read at anytime without affecting the count or the operation of the PWM channel.

Any value written to the counter causes the counter to reset to 0x0000, the counter direction to be set to up, the immediate load of both duty and period registers with values from the buffers, and the output to change according to the polarity bit. When the channel is disabled (PWMEx = 0), the counter stops. When a channel becomes enabled (PWMEx = 1), the associated PWM counter continues from the count in the PWMCNTx register. This allows the waveform to resume when the channel is re-enabled. When the channel is disabled, writing 0 to the period register will cause the counter to reset on the next selected clock.

**NOTE**

If the user wants to start a new "clean" PWM waveform without any "history" from the old waveform, the user must write to channel counter (PWMCNTx) prior to enabling the PWM channel (PWMEx = 1).

Generally, writes to the counter are done prior to enabling a channel to start from a known state. However, writing a counter can also be done while the PWM channel is enabled (counting). The effect is similar to writing the counter when the channel is disabled except that the new period is started immediately with the output set according to the polarity bit.

**NOTE**

Writing to the counter while the channel is enabled can cause an irregular PWM cycle to occur.

The counter is cleared at the end of the effective period (see Section 12.4.2.5, "Left Aligned Outputs," and Section 12.4.2.6, "Center Aligned Outputs," for more details).

**Table 12-11. PWM Timer Counter Conditions**

| Counter Clears (0x0000) | Counter Counts | Counter Stops |
|---|---|---|
| When PWMCNTx register written to any value | When PWM channel is enabled (PWMEx = 1). Counts from last value in PWMCNTx. | When PWM channel is disabled (PWMEx = 0) |
| Effective period ends | | |

#### 12.4.2.5 Left Aligned Outputs

The PWM timer provides the choice of two types of outputs, left aligned or center aligned outputs. They are selected with the CAEx bits in the PWMCAE register. If the CAEx bit is cleared (CAEx = 0), the corresponding PWM output will be left aligned.

In left aligned output mode, the 8-bit counter is configured as an up counter only. It compares to two registers, a duty register and a period register as shown in the block diagram in Figure 12-35. When the PWM counter matches the duty register the output flip-flop changes state causing the PWM waveform to also change state. A match between the PWM counter and the period register resets the counter and the output flip-flop as shown in Figure 12-35 as well as performing a load from the double buffer period and duty register to the associated registers as described in Section 12.4.2.3, "PWM Period and Duty." The counter counts from 0 to the value in the period register – 1.

**NOTE**

Changing the PWM output mode from left aligned output to center aligned output (or vice versa) while channels are operating can cause irregularities in the PWM output. It is recommended to program the output mode before enabling the PWM channel.

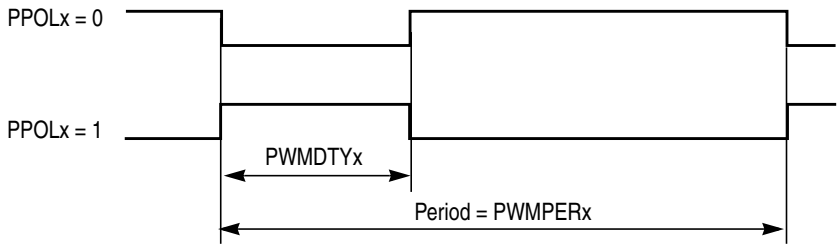


**Figure 12-36. PWM Left Aligned Output Waveform**

To calculate the output frequency in left aligned output mode for a particular channel, take the selected clock source frequency for the channel (A, B, SA, or SB) and divide it by the value in the period register for that channel.

- PWMx frequency = clock (A, B, SA, or SB) / PWMPERx
- PWMx duty cycle (high time as a% of period):
  - Polarity = 0 (PPOLx = 0)
    Duty cycle = [(PWMPERx-PWMDTYx)/PWMPERx] * 100%
  - Polarity = 1 (PPOLx = 1)
    Duty cycle = [PWMDTYx / PWMPERx] * 100%

As an example of a left aligned output, consider the following case:

Clock source = bus clock, where bus clock = 10 MHz (100 ns period)
PPOLx = 0
PWMPERx = 4
PWMDTYx = 1
PWMx frequency = 10 MHz/4 = 2.5 MHz
PWMx period = 400 ns
PWMx duty cycle = 3/4 *100% = 75%

Shown below is the output waveform generated.

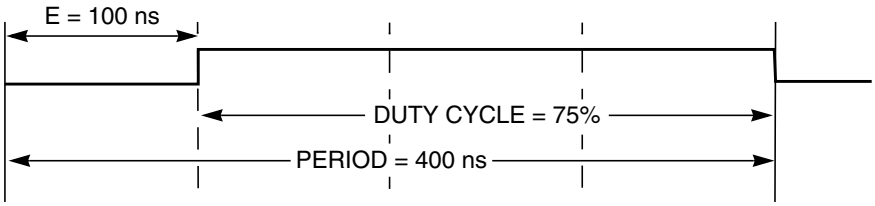


**Figure 12-37. PWM Left Aligned Output Example Waveform**

### 12.4.2.6 Center Aligned Outputs

For center aligned output mode selection, set the CAEx bit (CAEx = 1) in the PWMCAE register and the corresponding PWM output will be center aligned.

The 8-bit counter operates as an up/down counter in this mode and is set to up whenever the counter is equal to 0x0000. The counter compares to two registers, a duty register and a period register as shown in the block diagram in Figure 12-35. When the PWM counter matches the duty register the output flip-flop changes state causing the PWM waveform to also change state. A match between the PWM counter and the period register changes the counter direction from an up-count to a down-count. When the PWM counter decrements and matches the duty register again, the output flip-flop changes state causing the PWM output to also change state. When the PWM counter decrements and reaches 0, the counter direction changes from a down-count back to an up-count and a load from the double buffer period and duty registers to the associated registers is performed as described in Section 12.4.2.3, “PWM Period and Duty.” The counter counts from 0 up to the value in the period register and then back down to 0. Thus the effective period is PWMPERx*2.

**NOTE**

Changing the PWM output mode from left aligned output to center aligned output (or vice versa) while channels are operating can cause irregularities in the PWM output. It is recommended to program the output mode before enabling the PWM channel.

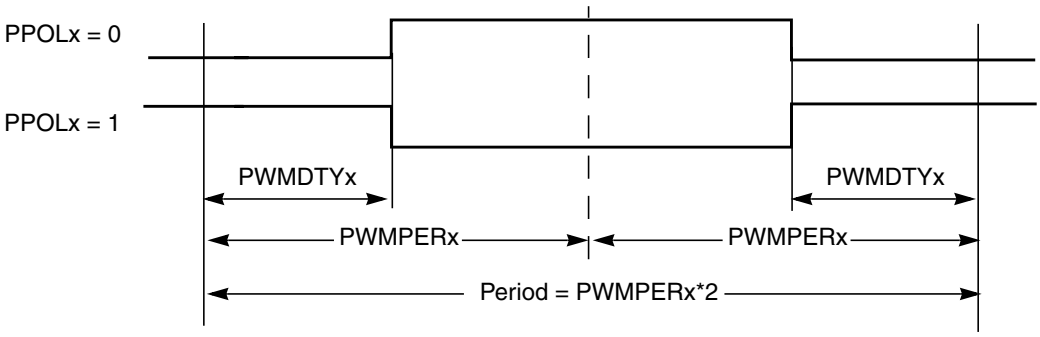


**Figure 12-38. PWM Center Aligned Output Waveform**

To calculate the output frequency in center aligned output mode for a particular channel, take the selected clock source frequency for the channel (A, B, SA, or SB) and divide it by twice the value in the period register for that channel.

- PWMx frequency = clock (A, B, SA, or SB) / (2*PWMPERx)
- PWMx duty cycle (high time as a% of period):
  - Polarity = 0 (PPOLx = 0)
    Duty cycle = [(PWMPERx-PWMDTYx)/PWMPERx] * 100%
  - Polarity = 1 (PPOLx = 1)
    Duty cycle = [PWMDTYx / PWMPERx] * 100%

As an example of a center aligned output, consider the following case:

Clock source = bus clock, where bus clock = 10 MHz (100 ns period)

PPOLx = 0

PWMPERx = 4

PWMDTYx = 1

PWMx frequency = 10 MHz/8 = 1.25 MHz

PWMx period = 800 ns

PWMx duty cycle = 3/4 *100% = 75%

Shown below is the output waveform generated.

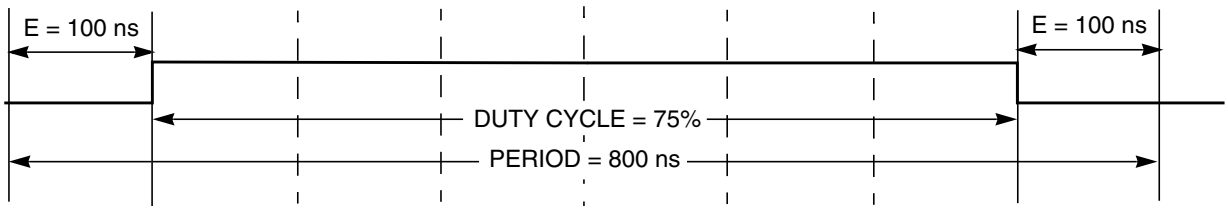


**Figure 12-39. PWM Center Aligned Output Example Waveform**

### 12.4.2.7 PWM 16-Bit Functions

The PWM timer also has the option of generating 6-channels of 8-bits or 3-channels of 16-bits for greater PWM resolution}. This 16-bit channel option is achieved through the concatenation of two 8-bit channels.

The PWMCTL register contains three control bits, each of which is used to concatenate a pair of PWM channels into one 16-bit channel. Channels 4 and 5 are concatenated with the CON45 bit, channels 2 and 3 are concatenated with the CON23 bit, and channels 0 and 1 are concatenated with the CON01 bit.

**NOTE**

Change these bits only when both corresponding channels are disabled.

When channels 4 and 5 are concatenated, channel 4 registers become the high-order bytes of the double byte channel as shown in Figure 12-40. Similarly, when channels 2 and 3 are concatenated, channel 2 registers become the high-order bytes of the double byte channel. When channels 0 and 1 are concatenated, channel 0 registers become the high-order bytes of the double byte channel.

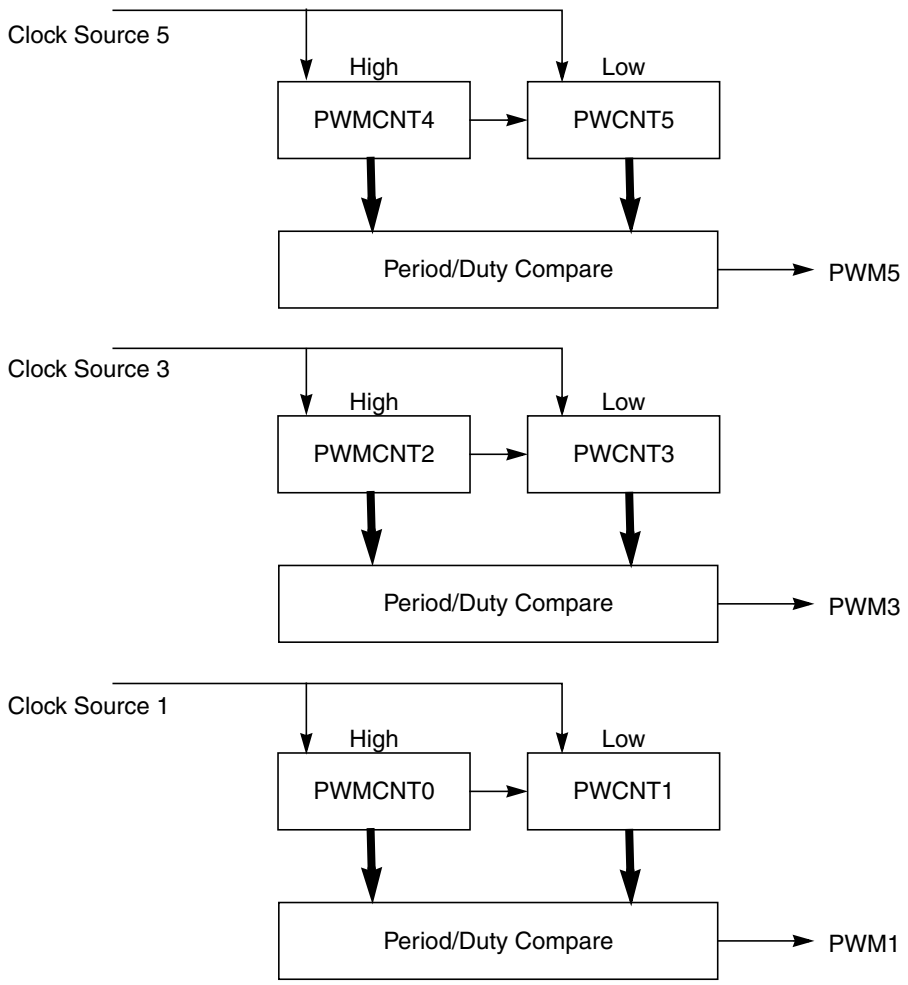


**Figure 12-40. PWM 16-Bit Mode**

When using the 16-bit concatenated mode, the clock source is determined by the low-order 8-bit channel clock select control bits. That is channel 5 when channels 4 and 5 are concatenated, channel 3 when channels 2 and 3 are concatenated, and channel 1 when channels 0 and 1 are concatenated. The resulting PWM is output to the pins of the corresponding low-order 8-bit channel as also shown in Figure 12-40. The polarity of the resulting PWM output is controlled by the PPOLx bit of the corresponding low-order 8-bit channel as well.

After concatenated mode is enabled (CONxx bits set in PWMCTL register), enabling/disabling the corresponding 16-bit PWM channel is controlled by the low-order PWMEx bit. In this case, the high-order bytes PWMEx bits have no effect and their corresponding PWM output is disabled.

In concatenated mode, writes to the 16-bit counter by using a 16-bit access or writes to either the low or high-order byte of the counter will reset the 16-bit counter. Reads of the 16-bit counter must be made by 16-bit access to maintain data coherency.

Either left aligned or center aligned output mode can be used in concatenated mode and is controlled by the low-order CAEx bit. The high-order CAEx bit has no effect.

Table 12-12 is used to summarize which channels are used to set the various control bits when in 16-bit mode.

**Table 12-12. 16-bit Concatenation Mode Summary**

| CONxx | PWMEx | PPOLx | PCLKx | CAEx | PWMx Output |
|---|---|---|---|---|---|
| CON45 | PWME5 | PPOL5 | PCLK5 | CAE5 | PWM5 |
| CON23 | PWME3 | PPOL3 | PCLK3 | CAE3 | PWM3 |
| CON01 | PWME1 | PPOL1 | PCLK1 | CAE1 | PWM1 |

### 12.4.2.8 PWM Boundary Cases

Table 12-13 summarizes the boundary conditions for the PWM regardless of the output mode (left aligned or center aligned) and 8-bit (normal) or 16-bit (concatenation):

**Table 12-13. PWM Boundary Cases**

| PWMDTYx | PWMPERx | PPOLx | PWMx Output |
|---|---|---|---|
| 0x0000 (indicates no duty) | >0x0000 | 1 | Always Low |
| 0x0000 (indicates no duty) | >0x0000 | 0 | Always High |
| XX | 0x0000[1] (indicates no period) | 1 | Always High |
| XX | 0x0000[1] (indicates no period) | 0 | Always Low |
| >= PWMPERx | XX | 1 | Always High |
| >= PWMPERx | XX | 0 | Always Low |

1. Counter = 0x0000 and does not count.

## 12.5 Resets

The reset state of each individual bit is listed within the register description section (see Section 12.3, “Memory Map and Register Definition,” which details the registers and their bit-fields. All special functions or modes which are initialized during or just following reset are described within this section.

- The 8-bit up/down counter is configured as an up counter out of reset.
- All the channels are disabled and all the counters don’t count.

## 12.6 Interrupts

The PWM8B6CV1 module has only one interrupt which is generated at the time of emergency shutdown, if the corresponding enable bit (PWMIE) is set. This bit is the enable for the interrupt. The interrupt flag PWMIF is set whenever the input level of the PWM5 channel changes while PWM5ENA=1 or when PWMENA is being asserted while the level at PWM5 is active.

A description of the registers involved and affected due to this interrupt is explained in Section 12.3.2.15, “PWM Shutdown Register (PWMSDN).”

# Chapter 13
# Serial Communications Interface (S12SCIV2) Block Description

## 13.1 Introduction

This block guide provide an overview of serial communication interface (SCI) module. The SCI allows asynchronous serial communications with peripheral devices and other CPUs.

### 13.1.1 Glossary

IRQ — Interrupt Request

LSB — Least Significant Bit

MSB — Most Significant Bit

NRZ — Non-Return-to-Zero

RZI — Return-to-Zero-Inverted

RXD — Receive Pin

SCI — Serial Communication Interface

TXD — Transmit Pin

### 13.1.2 Features

The SCI includes these distinctive features:

- Full-duplex operation
- Standard mark/space non-return-to-zero (NRZ) format
- 13-bit baud rate selection
- Programmable 8-bit or 9-bit data format
- Separately enabled transmitter and receiver
- Programmable transmitter output parity
- Two receiver wake up methods:
  - Idle line wake-up
  - Address mark wake-up
- Interrupt-driven operation with eight flags:
  - Transmitter empty

  - Transmission complete
  - Receiver full
  - Idle receiver input
  - Receiver overrun
  - Noise error
  - Framing error
  - Parity error
- Receiver framing error detection
- Hardware parity checking
- 1/16 bit-time noise detection

## 13.1.3 Modes of Operation

The SCI operation is the same independent of device resource mapping and bus interface mode. Different power modes are available to facilitate power saving.

### 13.1.3.1 Run Mode

Normal mode of operation.

### 13.1.3.2 Wait Mode

SCI operation in wait mode depends on the state of the SCISWAI bit in the SCI control register 1 (SCICR1).

- If SCISWAI is clear, the SCI operates normally when the CPU is in wait mode.
- If SCISWAI is set, SCI clock generation ceases and the SCI module enters a power-conservation state when the CPU is in wait mode. Setting SCISWAI does not affect the state of the receiver enable bit, RE, or the transmitter enable bit, TE.
- If SCISWAI is set, any transmission or reception in progress stops at wait mode entry. The transmission or reception resumes when either an internal or external interrupt brings the CPU out of wait mode. Exiting wait mode by reset aborts any transmission or reception in progress and resets the SCI.

### 13.1.3.3 Stop Mode

The SCI is inactive during stop mode for reduced power consumption. The STOP instruction does not affect the SCI register states, but the SCI module clock will be disabled. The SCI operation resumes from where it left off after an external interrupt brings the CPU out of stop mode. Exiting stop mode by reset aborts any transmission or reception in progress and resets the SCI.

### 13.1.4 Block Diagram

Figure 13-1 is a high level block diagram of the SCI module, showing the interaction of various functional blocks.

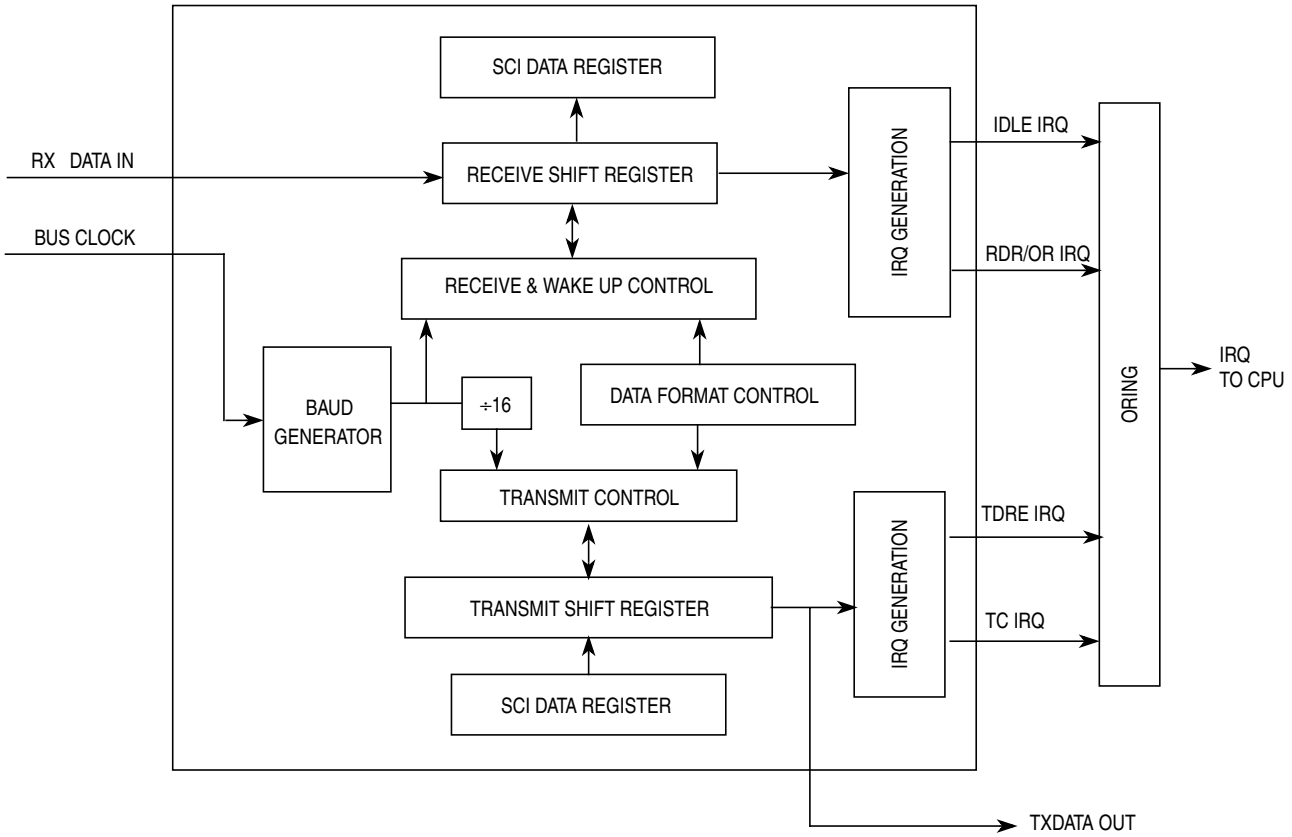


**Figure 13-1. SCI Block Diagram**

## 13.2 External Signal Description

The SCI module has a total of two external pins:

### 13.2.1 TXD-SCI Transmit Pin

This pin serves as transmit data output of SCI.

### 13.2.2 RXD-SCI Receive Pin

This pin serves as receive data input of the SCI.

## 13.3 Memory Map and Registers

This section provides a detailed description of all memory and registers.

### 13.3.1 Module Memory Map

The memory map for the SCI module is given below in Figure 13-2. The Address listed for each register is the address offset. The total address for each register is the sum of the base address for the SCI module and the address offset for each register.

| Address | Name | | Bit 7 | 6 | 5 | 4 | 3 | 2 | 1 | Bit 0 |
|---|---|---|---|---|---|---|---|---|---|---|
| 0x0000 | SCIBDH | R | 0 | 0 | 0 | SBR12 | SBR11 | SBR10 | SBR9 | SBR8 |
| | | W | | | | | | | | |
| 0x0001 | SCIBDL | R/W | SBR7 | SBR6 | SBR5 | SBR4 | SBR3 | SBR2 | SBR1 | SBR0 |
| 0x0002 | SCICR1 | R/W | LOOPS | SCISWAI | RSRC | M | WAKE | ILT | PE | PT |
| 0x0003 | SCICR2 | R/W | TIE | TCIE | RIE | ILIE | TE | RE | RWU | SBK |
| 0x0004 | SCISR1 | R | TDRE | TC | RDRF | IDLE | OR | NF | FE | PF |
| | | W | | | | | | | | |
| 0x0005 | SCISR2 | R | 0 | 0 | 0 | 0 | 0 | BRK13 | TXDIR | RAF |
| | | W | | | | | | | | |
| 0x0006 | SCIDRH | R | R8 | T8 | 0 | 0 | 0 | 0 | 0 | 0 |
| | | W | | | | | | | | |
| 0x0007 | SCIDRL | R | R7 | R6 | R5 | R4 | R3 | R2 | R1 | R0 |
| | | W | T7 | T6 | T5 | T4 | T3 | T2 | T1 | T0 |

= Unimplemented or Reserved

**Figure 13-2. SCI Register Summary**

### 13.3.2 Register Descriptions

This section consists of register descriptions in address order. Each description includes a standard register diagram with an associated figure number. Writes to a reserved register location do not have any effect and reads of these locations return a zero. Details of register bit and field function follow the register diagrams, in bit order.

### 13.3.2.1 SCI Baud Rate Registers (SCIBDH and SCHBDL)

Module Base + 0x_0000

| | 7 | 6 | 5 | 4 | 3 | 2 | 1 | 0 |
|---|---|---|---|---|---|---|---|---|
| R | 0 | 0 | 0 | SBR12 | SBR11 | SBR10 | SBR9 | SBR8 |
| W | | | | | | | | |
| Reset | 0 | 0 | 0 | 0 | 0 | 0 | 0 | 0 |

Module Base + 0x_0001

| | 7 | 6 | 5 | 4 | 3 | 2 | 1 | 0 |
|---|---|---|---|---|---|---|---|---|
| R<br>W | SBR7 | SBR6 | SBR5 | SBR4 | SBR3 | SBR2 | SBR1 | SBR0 |
| Reset | 0 | 0 | 0 | 0 | 0 | 1 | 0 | 0 |

= Unimplemented or Reserved

**Figure 13-3. SCI Baud Rate Registers (SCIBDH and SCIBDL)**

The SCI Baud Rate Register is used by the counter to determine the baud rate of the SCI. The formula for calculating the baud rate is:

SCI baud rate = SCI module clock / (16 x BR)

where:

BR is the content of the SCI baud rate registers, bits SBR12 through SBR0. The baud rate registers can contain a value from 1 to 8191.

Read: Anytime. If only SCIBDH is written to, a read will not return the correct data until SCIBDL is written to as well, following a write to SCIBDH.

Write: Anytime

**Table 13-1. SCIBDH AND SCIBDL Field Descriptions**

| Field | Description |
|---|---|
| 4–0<br>7–0<br>SBR[12:0] | **SCI Baud Rate Bits** — The baud rate for the SCI is determined by these 13 bits.<br>**Note:** The baud rate generator is disabled until the TE bit or the RE bit is set for the first time after reset. The baud rate generator is disabled when BR = 0.<br>Writing to SCIBDH has no effect without writing to SCIBDL, since writing to SCIBDH puts the data in a temporary location until SCIBDL is written to. |

### 13.3.2.2 SCI Control Register 1 (SCICR1)

Module Base + 0x_0002

| | 7 | 6 | 5 | 4 | 3 | 2 | 1 | 0 |
|---|---|---|---|---|---|---|---|---|
| R<br>W | LOOPS | SCISWAI | RSRC | M | WAKE | ILT | PE | PT |
| Reset | 0 | 0 | 0 | 0 | 0 | 0 | 0 | 0 |

**Figure 13-4. SCI Control Register 1 (SCICR1)**

Read: Anytime

Write: Anytime

**Table 13-2. SCICR1 Field Descriptions**

| Field | Description |
|---|---|
| 7<br>LOOPS | **Loop Select Bit** — LOOPS enables loop operation. In loop operation, the RXD pin is disconnected from the SCI and the transmitter output is internally connected to the receiver input. Both the transmitter and the receiver must be enabled to use the loop function.See Table 13-3.<br>0 Normal operation enabled<br>1 Loop operation enabled<br>**Note:** The receiver input is determined by the RSRC bit. |
| 6<br>SCISWAI | **SCI Stop in Wait Mode Bit** — SCISWAI disables the SCI in wait mode.<br>0 SCI enabled in wait mode<br>1 SCI disabled in wait mode |
| 5<br>RSRC | **Receiver Source Bit** — When LOOPS = 1, the RSRC bit determines the source for the receiver shift register input.<br>0 Receiver input internally connected to transmitter output<br>1 Receiver input connected externally to transmitter |
| 4<br>M | **Data Format Mode Bit** — MODE determines whether data characters are eight or nine bits long.<br>0 One start bit, eight data bits, one stop bit<br>1 One start bit, nine data bits, one stop bit |
| 3<br>WAKE | **Wakeup Condition Bit** — WAKE determines which condition wakes up the SCI: a logic 1 (address mark) in the most significant bit position of a received data character or an idle condition on the RXD.<br>0 Idle line wakeup<br>1 Address mark wakeup |
| 2<br>ILT | **Idle Line Type Bit** — ILT determines when the receiver starts counting logic 1s as idle character bits. The counting begins either after the start bit or after the stop bit. If the count begins after the start bit, then a string of logic 1s preceding the stop bit may cause false recognition of an idle character. Beginning the count after the stop bit avoids false idle character recognition, but requires properly synchronized transmissions.<br>0 Idle character bit count begins after start bit<br>1 Idle character bit count begins after stop bit |
| 1<br>PE | **Parity Enable Bit** — PE enables the parity function. When enabled, the parity function inserts a parity bit in the most significant bit position.<br>0 Parity function disabled<br>1 Parity function enabled |
| 0<br>PT | **Parity Type Bit** — PT determines whether the SCI generates and checks for even parity or odd parity. With even parity, an even number of 1s clears the parity bit and an odd number of 1s sets the parity bit. With odd parity, an odd number of 1s clears the parity bit and an even number of 1s sets the parity bit.<br>0 Even parity<br>1 Odd parity |

**Table 13-3. Loop Functions**

| LOOPS | RSRC | Function |
|---|---|---|
| 0 | x | Normal operation |
| 1 | 0 | Loop mode with Rx input internally connected to Tx output |
| 1 | 1 | Single-wire mode with Rx input connected to TXD |

### 13.3.2.3 SCI Control Register 2 (SCICR2)

Module Base + 0x_0003

| | 7 | 6 | 5 | 4 | 3 | 2 | 1 | 0 |
|---|---|---|---|---|---|---|---|---|
| R/W | TIE | TCIE | RIE | ILIE | TE | RE | RWU | SBK |
| Reset | 0 | 0 | 0 | 0 | 0 | 0 | 0 | 0 |

**Figure 13-5. SCI Control Register 2 (SCICR2)**

Read: Anytime

Write: Anytime

**Table 13-4. SCICR2 Field Descriptions**

| Field | Description |
|---|---|
| 7<br>TIE | **Transmitter Interrupt Enable Bit** — TIE enables the transmit data register empty flag, TDRE, to generate interrupt requests.<br>0 TDRE interrupt requests disabled<br>1 TDRE interrupt requests enabled |
| 6<br>TCIE | **Transmission Complete Interrupt Enable Bit** — TCIE enables the transmission complete flag, TC, to generate interrupt requests.<br>0 TC interrupt requests disabled<br>1 TC interrupt requests enabled |
| 5<br>RIE | **Receiver Full Interrupt Enable Bit** — RIE enables the receive data register full flag, RDRF, or the overrun flag, OR, to generate interrupt requests.<br>0 RDRF and OR interrupt requests disabled<br>1 RDRF and OR interrupt requests enabled |
| 4<br>ILIE | **Idle Line Interrupt Enable Bit** — ILIE enables the idle line flag, IDLE, to generate interrupt requests.<br>0 IDLE interrupt requests disabled<br>1 IDLE interrupt requests enabled |
| 3<br>TE | **Transmitter Enable Bit** — TE enables the SCI transmitter and configures the TXD pin as being controlled by the SCI. The TE bit can be used to queue an idle preamble.<br>0 Transmitter disabled<br>1 Transmitter enabled |
| 2<br>RE | **Receiver Enable Bit** — RE enables the SCI receiver.<br>0 Receiver disabled<br>1 Receiver enabled |

**Table 13-4. SCICR2 Field Descriptions (continued)**

| Field | Description |
|---|---|
| 1<br>RWU | **Receiver Wakeup Bit** — Standby state<br>0 Normal operation.<br>1 RWU enables the wakeup function and inhibits further receiver interrupt requests. Normally, hardware wakes the receiver by automatically clearing RWU. |
| 0<br>SBK | **Send Break Bit** — Toggling SBK sends one break character (10 or 11 logic 0s, respectively 13 or 14 logics 0s if BRK13 is set). Toggling implies clearing the SBK bit before the break character has finished transmitting. As long as SBK is set, the transmitter continues to send complete break characters (10 or 11 bits, respectively 13 or 14 bits).<br>0 No break characters<br>1 Transmit break characters |

### 13.3.2.4 SCI Status Register 1 (SCISR1)

The SCISR1 and SCISR2 registers provides inputs to the MCU for generation of SCI interrupts. Also, these registers can be polled by the MCU to check the status of these bits. The flag-clearing procedures require that the status register be read followed by a read or write to the SCI Data Register.It is permissible to execute other instructions between the two steps as long as it does not compromise the handling of I/O, but the order of operations is important for flag clearing.

Module Base + 0x_0004

| | 7 | 6 | 5 | 4 | 3 | 2 | 1 | 0 |
|---|---|---|---|---|---|---|---|---|
| R | TDRE | TC | RDRF | IDLE | OR | NF | FE | PF |
| W | | | | | | | | |
| Reset | 0 | 0 | 0 | 0 | 0 | 0 | 0 | 0 |

= Unimplemented or Reserved

**Figure 13-6. SCI Status Register 1 (SCISR1)**

Read: Anytime

Write: Has no meaning or effect

**Table 13-5. SCISR1 Field Descriptions**

| Field | Description |
|---|---|
| 7<br>TDRE | **Transmit Data Register Empty Flag** — TDRE is set when the transmit shift register receives a byte from the SCI data register. When TDRE is 1, the transmit data register (SCIDRH/L) is empty and can receive a new value to transmit.Clear TDRE by reading SCI status register 1 (SCISR1), with TDRE set and then writing to SCI data register low (SCIDRL).<br>0 No byte transferred to transmit shift register<br>1 Byte transferred to transmit shift register; transmit data register empty |
| 6<br>TC | **Transmit Complete Flag** — TC is set low when there is a transmission in progress or when a preamble or break character is loaded. TC is set high when the TDRE flag is set and no data, preamble, or break character is being transmitted.When TC is set, the TXD out signal becomes idle (logic 1). Clear TC by reading SCI status register 1 (SCISR1) with TC set and then writing to SCI data register low (SCIDRL). TC is cleared automatically when data, preamble, or break is queued and ready to be sent. TC is cleared in the event of a simultaneous set and clear of the TC flag (transmission not complete).<br>0 Transmission in progress<br>1 No transmission in progress |

**Table 13-5. SCISR1 Field Descriptions (continued)**

| Field | Description |
|---|---|
| 5<br>RDRF | **Receive Data Register Full Flag** — RDRF is set when the data in the receive shift register transfers to the SCI data register. Clear RDRF by reading SCI status register 1 (SCISR1) with RDRF set and then reading SCI data register low (SCIDRL).<br>0 Data not available in SCI data register<br>1 Received data available in SCI data register |
| 4<br>IDLE | **Idle Line Flag** — IDLE is set when 10 consecutive logic 1s (if M=0) or 11 consecutive logic 1s (if M=1) appear on the receiver input. Once the IDLE flag is cleared, a valid frame must again set the RDRF flag before an idle condition can set the IDLE flag.Clear IDLE by reading SCI status register 1 (SCISR1) with IDLE set and then reading SCI data register low (SCIDRL).<br>0 Receiver input is either active now or has never become active since the IDLE flag was last cleared<br>1 Receiver input has become idle<br>**Note:** When the receiver wakeup bit (RWU) is set, an idle line condition does not set the IDLE flag. |
| 3<br>OR | **Overrun Flag** — OR is set when software fails to read the SCI data register before the receive shift register receives the next frame. The OR bit is set immediately after the stop bit has been completely received for the second frame. The data in the shift register is lost, but the data already in the SCI data registers is not affected. Clear OR by reading SCI status register 1 (SCISR1) with OR set and then reading SCI data register low (SCIDRL).<br>0 No overrun<br>1 Overrun<br>**Note:** OR flag may read back as set when RDRF flag is clear. This may happen if the following sequence of events occurs:<br>1. After the first frame is received, read status register SCISR1 (returns RDRF set and OR flag clear);<br>2. Receive second frame without reading the first frame in the data register (the second frame is not received and OR flag is set);<br>3. Read data register SCIDRL (returns first frame and clears RDRF flag in the status register);<br>4. Read status register SCISR1 (returns RDRF clear and OR set).<br>Event 3 may be at exactly the same time as event 2 or any time after. When this happens, a dummy SCIDRL read following event 4 will be required to clear the OR flag if further frames are to be received. |
| 2<br>NF | **Noise Flag** — NF is set when the SCI detects noise on the receiver input. NF bit is set during the same cycle as the RDRF flag but does not get set in the case of an overrun. Clear NF by reading SCI status register 1(SCISR1), and then reading SCI data register low (SCIDRL).<br>0 No noise<br>1 Noise |
| 1<br>FE | **Framing Error Flag** — FE is set when a logic 0 is accepted as the stop bit. FE bit is set during the same cycle as the RDRF flag but does not get set in the case of an overrun. FE inhibits further data reception until it is cleared. Clear FE by reading SCI status register 1 (SCISR1) with FE set and then reading the SCI data register low (SCIDRL).<br>0 No framing error<br>1 Framing error |
| 0<br>PF | **Parity Error Flag** — PF is set when the parity enable bit (PE) is set and the parity of the received data does not match the parity type bit (PT). PF bit is set during the same cycle as the RDRF flag but does not get set in the case of an overrun. Clear PF by reading SCI status register 1 (SCISR1), and then reading SCI data register low (SCIDRL).<br>0 No parity error<br>1 Parity error |

### 13.3.2.5 SCI Status Register 2 (SCISR2)

Module Base + 0x_0005

| | 7 | 6 | 5 | 4 | 3 | 2 | 1 | 0 |
|---|---|---|---|---|---|---|---|---|
| R | 0 | 0 | 0 | 0 | 0 | BK13 | TXDIR | RAF |
| W | | | | | | | | |
| Reset | 0 | 0 | 0 | 0 | 0 | 0 | 0 | 0 |

= Unimplemented or Reserved

**Figure 13-7. SCI Status Register 2 (SCISR2)**

Read: Anytime

Write: Anytime; writing accesses SCI status register 2; writing to any bits except TXDIR and BRK13 (SCISR2[1] & [2]) has no effect

**Table 13-6. SCISR2 Field Descriptions**

| Field | Description |
|---|---|
| 2<br>BK13 | **Break Transmit Character Length** — This bit determines whether the transmit break character is 10 or 11 bit respectively 13 or 14 bits long. The detection of a framing error is not affected by this bit.<br>0 Break Character is 10 or 11 bit long<br>1 Break character is 13 or 14 bit long |
| 1<br>TXDIR | **Transmitter Pin Data Direction in Single-Wire Mode.** — This bit determines whether the TXD pin is going to be used as an input or output, in the Single-Wire mode of operation. This bit is only relevant in the Single-Wire mode of operation.<br>0 TXD pin to be used as an input in Single-Wire mode<br>1 TXD pin to be used as an output in Single-Wire mode |
| 0<br>RAF | **Receiver Active Flag** — RAF is set when the receiver detects a logic 0 during the RT1 time period of the start bit search. RAF is cleared when the receiver detects an idle character.<br>0 No reception in progress<br>1 Reception in progress |

### 13.3.2.6 SCI Data Registers (SCIDRH and SCIDRL)

Module Base + 0x_0006

| | 7 | 6 | 5 | 4 | 3 | 2 | 1 | 0 |
|---|---|---|---|---|---|---|---|---|
| R | R8 | T8 | 0 | 0 | 0 | 0 | 0 | 0 |
| W | | | | | | | | |
| Reset | 0 | 0 | 0 | 0 | 0 | 0 | 0 | 0 |

Module Base + 0x_0007

| | 7 | 6 | 5 | 4 | 3 | 2 | 1 | 0 |
|---|---|---|---|---|---|---|---|---|
| R | R7 | R6 | R5 | R4 | R3 | R2 | R1 | R0 |
| W | T7 | T6 | T5 | T4 | T3 | T2 | T1 | T0 |
| Reset | 0 | 0 | 0 | 0 | 0 | 0 | 0 | 0 |

= Unimplemented or Reserved

**Figure 13-8. SCI Data Registers (SCIDRH and SCIDRL)**

Read: Anytime; reading accesses SCI receive data register

Write: Anytime; writing accesses SCI transmit data register; writing to R8 has no effect

**Table 13-7. SCIDRH AND SCIDRL Field Descriptions**

| Field | Description |
|---|---|
| 7<br>R8 | **Received Bit 8** — R8 is the ninth data bit received when the SCI is configured for 9-bit data format (M = 1). |
| 6<br>T8 | **Transmit Bit 8** — T8 is the ninth data bit transmitted when the SCI is configured for 9-bit data format (M = 1). |
| 7–0<br>R[7:0]<br>T[7:0] | **Received Bits** — Received bits seven through zero for 9-bit or 8-bit data formats<br><br>**Transmit Bits** — Transmit bits seven through zero for 9-bit or 8-bit formats |

**NOTE**

If the value of T8 is the same as in the previous transmission, T8 does not have to be rewritten.The same value is transmitted until T8 is rewritten

In 8-bit data format, only SCI data register low (SCIDRL) needs to be accessed.

When transmitting in 9-bit data format and using 8-bit write instructions, write first to SCI data register high (SCIDRH), then SCIDRL.

## 13.4 Functional Description

This section provides a complete functional description of the SCI block, detailing the operation of the design from the end user perspective in a number of subsections.

Figure 13-9 shows the structure of the SCI module. The SCI allows full duplex, asynchronous, NRZ serial communication between the CPU and remote devices, including other CPUs. The SCI transmitter and receiver operate independently, although they use the same baud rate generator. The CPU monitors the status of the SCI, writes the data to be transmitted, and processes received data.

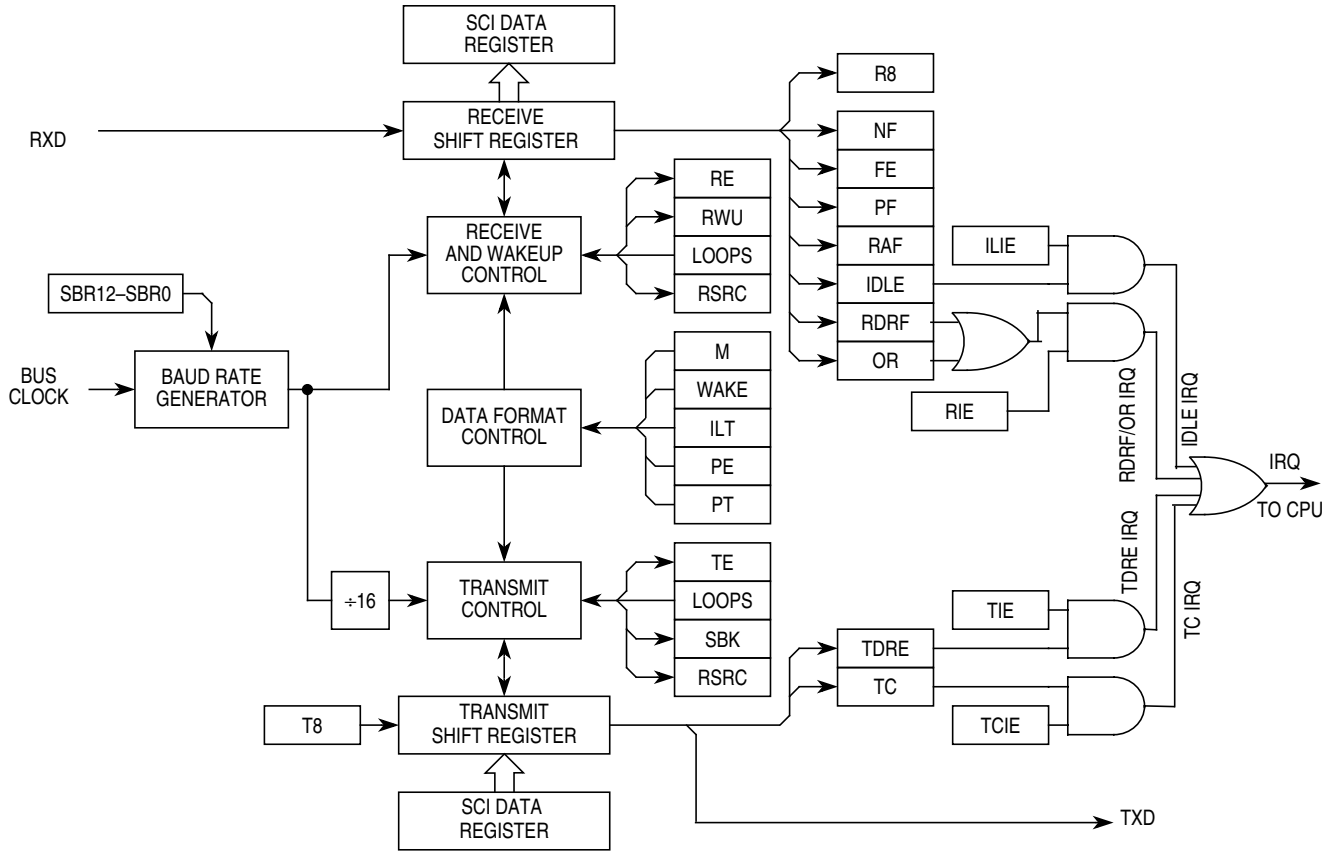


**Figure 13-9. SCI Block Diagram**

### 13.4.1 Data Format

The SCI uses the standard NRZ mark/space data format illustrated in Figure 13-10 below.

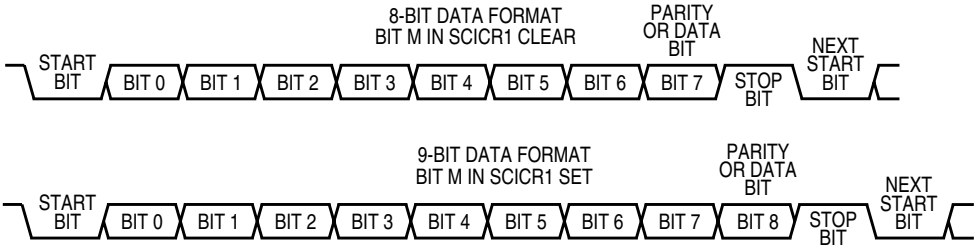


**Figure 13-10. SCI Data Formats**

Each data character is contained in a frame that includes a start bit, eight or nine data bits, and a stop bit. Clearing the M bit in SCI control register 1 configures the SCI for 8-bit data characters.A frame with eight data bits has a total of 10 bits. Setting the M bit configures the SCI for nine-bit data characters. A frame with nine data bits has a total of 11 bits

**Table 13-8. Example of 8-Bit Data Formats**

| Start Bit | Data Bits | Address Bits | Parity Bits | Stop Bit |
|---|---|---|---|---|
| 1 | 8 | 0 | 0 | 1 |
| 1 | 7 | 0 | 1 | 1 |
| 1 | 7 | 1[(1)] | 0 | 1 |

1. The address bit identifies the frame as an address character. See Section 13.4.4.6, “Receiver Wakeup”.

When the SCI is configured for 9-bit data characters, the ninth data bit is the T8 bit in SCI data register high (SCIDRH). It remains unchanged after transmission and can be used repeatedly without rewriting it. A frame with nine data bits has a total of 11 bits.

**Table 13-9. Example of 9-Bit Data Formats**

| Start Bit | Data Bits | Address Bits | Parity Bits | Stop Bit |
|---|---|---|---|---|
| 1 | 9 | 0 | 0 | 1 |
| 1 | 8 | 0 | 1 | 1 |
| 1 | 8 | 1[(1)] | 0 | 1 |

1. The address bit identifies the frame as an address character. See Section 13.4.4.6, “Receiver Wakeup”.

### 13.4.2 Baud Rate Generation

A 13-bit modulus counter in the baud rate generator derives the baud rate for both the receiver and the transmitter. The value from 0 to 8191 written to the SBR12–SBR0 bits determines the module clock divisor. The SBR bits are in the SCI baud rate registers (SCIBDH and SCIBDL). The baud rate clock is synchronized with the bus clock and drives the receiver. The baud rate clock divided by 16 drives the transmitter. The receiver has an acquisition rate of 16 samples per bit time.

Baud rate generation is subject to one source of error:

Integer division of the module clock may not give the exact target frequency.

Table 13-10 lists some examples of achieving target baud rates with a module clock frequency of 25 MHz

SCI baud rate = SCI module clock / (16 * SCIBR[12:0])

**Table 13-10. Baud Rates (Example: Module Clock = 25 MHz)**

| Bits SBR[12-0] | Receiver Clock (Hz) | Transmitter Clock (Hz) | Target Baud Rate | Error (%) |
|---|---|---|---|---|
| 41 | 609,756.1 | 38,109.8 | 38,400 | .76 |
| 81 | 308,642.0 | 19,290.1 | 19,200 | .47 |
| 163 | 153,374.2 | 9585.9 | 9600 | .16 |
| 326 | 76,687.1 | 4792.9 | 4800 | .15 |
| 651 | 38,402.5 | 2400.2 | 2400 | .01 |
| 1302 | 19,201.2 | 1200.1 | 1200 | .01 |
| 2604 | 9600.6 | 600.0 | 600 | .00 |
| 5208 | 4800.0 | 300.0 | 300 | .00 |

### 13.4.3 Transmitter

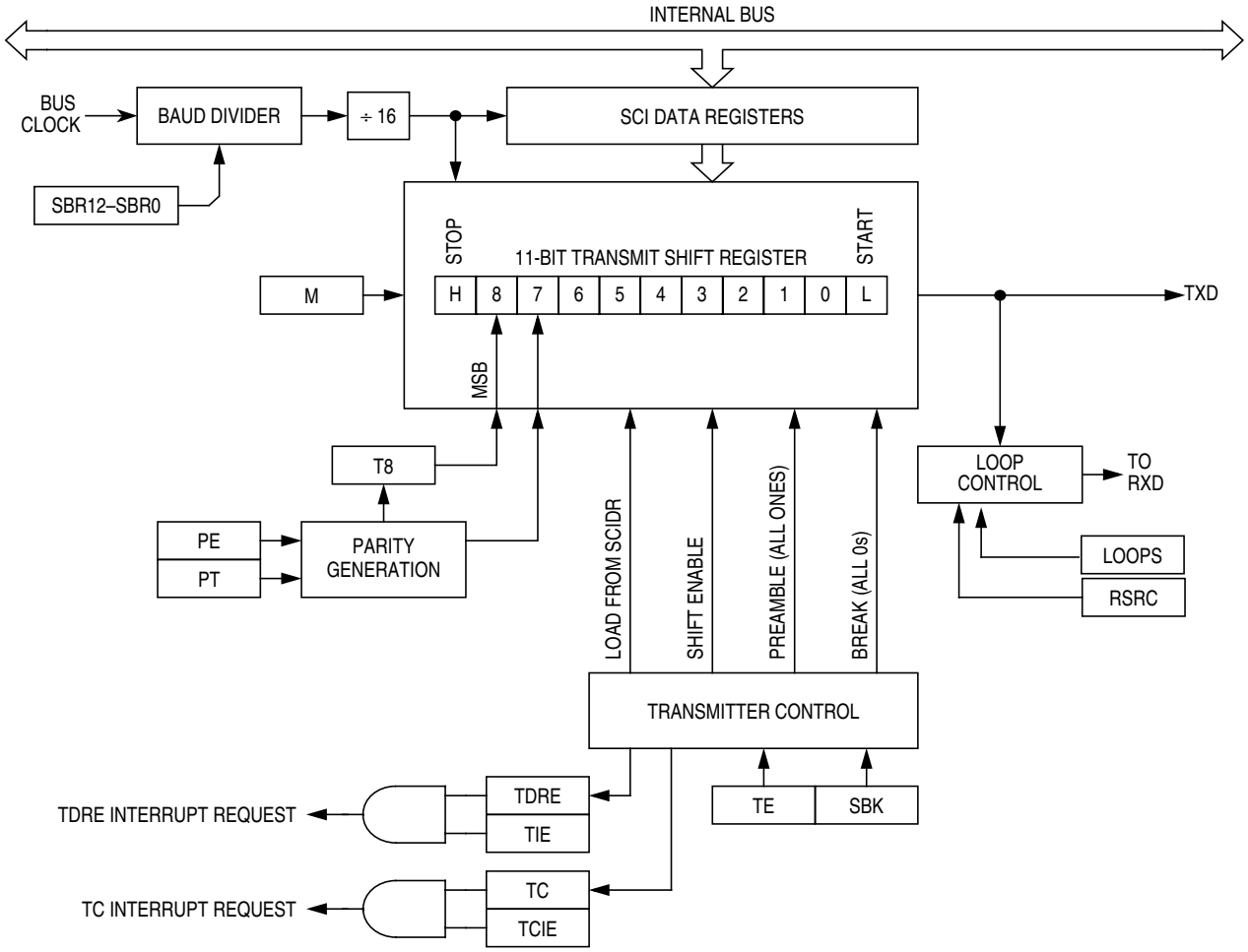


**Figure 13-11. Transmitter Block Diagram**

#### 13.4.3.1 Transmitter Character Length

The SCI transmitter can accommodate either 8-bit or 9-bit data characters. The state of the M bit in SCI control register 1 (SCICR1) determines the length of data characters. When transmitting 9-bit data, bit T8 in SCI data register high (SCIDRH) is the ninth bit (bit 8).

#### 13.4.3.2 Character Transmission

To transmit data, the MCU writes the data bits to the SCI data registers (SCIDRH/SCIDRL), which in turn are transferred to the transmitter shift register. The transmit shift register then shifts a frame out through the **Tx output** signal, after it has prefaced them with a start bit and appended them with a stop bit. The SCI data registers (SCIDRH and SCIDRL) are the write-only buffers between the internal data bus and the transmit shift register.

The SCI also sets a flag, the transmit data register empty flag (TDRE), every time it transfers data from the buffer (SCIDRH/L) to the transmitter shift register.The transmit driver routine may respond to this flag by

writing another byte to the Transmitter buffer (SCIDRH/SCIDRL), while the shift register is still shifting out the first byte.

To initiate an SCI transmission:

1. Configure the SCI:
   a) Select a baud rate. Write this value to the SCI baud registers (SCIBDH/L) to begin the baud rate generator. Remember that the baud rate generator is disabled when the baud rate is zero. Writing to the SCIBDH has no effect without also writing to SCIBDL.
   b) Write to SCICR1 to configure word length, parity, and other configuration bits (LOOPS,RSRC,M,WAKE,ILT,PE,PT).
   c) Enable the transmitter, interrupts, receive, and wake up as required, by writing to the SCICR2 register bits (TIE,TCIE,RIE,ILIE,TE,RE,RWU,SBK). A preamble or idle character will now be shifted out of the transmitter shift register.
2. Transmit Procedure for Each Byte:
   a. Poll the TDRE flag by reading the SCISR1 or responding to the TDRE interrupt. Keep in mind that the TDRE bit resets to one.
   d) If the TDRE flag is set, write the data to be transmitted to SCIDRH/L, where the ninth bit is written to the T8 bit in SCIDRH if the SCI is in 9-bit data format. A new transmission will not result until the TDRE flag has been cleared.
3. Repeat step 2 for each subsequent transmission.

**NOTE**

The TDRE flag is set when the shift register is loaded with the next data to be transmitted from SCIDRH/L, which happens, generally speaking, a little over half-way through the stop bit of the previous frame. Specifically, this transfer occurs 9/16ths of a bit time AFTER the start of the stop bit of the previous frame.

Writing the TE bit from 0 to a 1 automatically loads the transmit shift register with a preamble of 10 logic 1s (if M = 0) or 11 logic 1s (if M = 1). After the preamble shifts out, control logic transfers the data from the SCI data register into the transmit shift register. A logic 0 start bit automatically goes into the least significant bit position of the transmit shift register. A logic 1 stop bit goes into the most significant bit position.

Hardware supports odd or even parity. When parity is enabled, the most significant bit (msb) of the data character is the parity bit.

The transmit data register empty flag, TDRE, in SCI status register 1 (SCISR1) becomes set when the SCI data register transfers a byte to the transmit shift register. The TDRE flag indicates that the SCI data register can accept new data from the internal data bus. If the transmit interrupt enable bit, TIE, in SCI control register 2 (SCICR2) is also set, the TDRE flag generates a transmitter interrupt request.

When the transmit shift register is not transmitting a frame, the **Tx output** signal goes to the idle condition, logic 1. If at any time software clears the TE bit in SCI control register 2 (SCICR2), the transmitter enable signal goes low and the transmit signal goes idle.

If software clears TE while a transmission is in progress (TC = 0), the frame in the transmit shift register continues to shift out. To avoid accidentally cutting off the last frame in a message, always wait for TDRE to go high after the last frame before clearing TE.

To separate messages with preambles with minimum idle line time, use this sequence between messages:

1. Write the last byte of the first message to SCIDRH/L.
2. Wait for the TDRE flag to go high, indicating the transfer of the last frame to the transmit shift register.
3. Queue a preamble by clearing and then setting the TE bit.
4. Write the first byte of the second message to SCIDRH/L.

#### 13.4.3.3 Break Characters

Writing a logic 1 to the send break bit, SBK, in SCI control register 2 (SCICR2) loads the transmit shift register with a break character. A break character contains all logic 0s and has no start, stop, or parity bit. Break character length depends on the M bit in SCI control register 1 (SCICR1). As long as SBK is at logic 1, transmitter logic continuously loads break characters into the transmit shift register. After software clears the SBK bit, the shift register finishes transmitting the last break character and then transmits at least one logic 1. The automatic logic 1 at the end of a break character guarantees the recognition of the start bit of the next frame.

The SCI recognizes a break character when a start bit is followed by eight or nine logic 0 data bits and a logic 0 where the stop bit should be. Receiving a break character has these effects on SCI registers:

- Sets the framing error flag, FE
- Sets the receive data register full flag, RDRF
- Clears the SCI data registers (SCIDRH/L)
- May set the overrun flag, OR, noise flag, NF, parity error flag, PE, or the receiver active flag, RAF (see Section 13.3.2.4, “SCI Status Register 1 (SCISR1)” and Section 13.3.2.5, “SCI Status Register 2 (SCISR2)”

#### 13.4.3.4 Idle Characters

An idle character contains all logic 1s and has no start, stop, or parity bit. Idle character length depends on the M bit in SCI control register 1 (SCICR1). The preamble is a synchronizing idle character that begins the first transmission initiated after writing the TE bit from 0 to 1.

If the TE bit is cleared during a transmission, the **Tx output** signal becomes idle after completion of the transmission in progress. Clearing and then setting the TE bit during a transmission queues an idle character to be sent after the frame currently being transmitted.

**NOTE**

When queueing an idle character, return the TE bit to logic 1 before the stop bit of the current frame shifts out through the **Tx output** signal. Setting TE after the stop bit appears on **Tx output signal** causes data previously written to the SCI data register to be lost. Toggle the TE bit for a queued idle character while the TDRE flag is set and immediately before writing the next byte to the SCI data register.

**NOTE**

If the TE bit is clear and the transmission is complete, the SCI is not the master of the TXD pin

## 13.4.4 Receiver

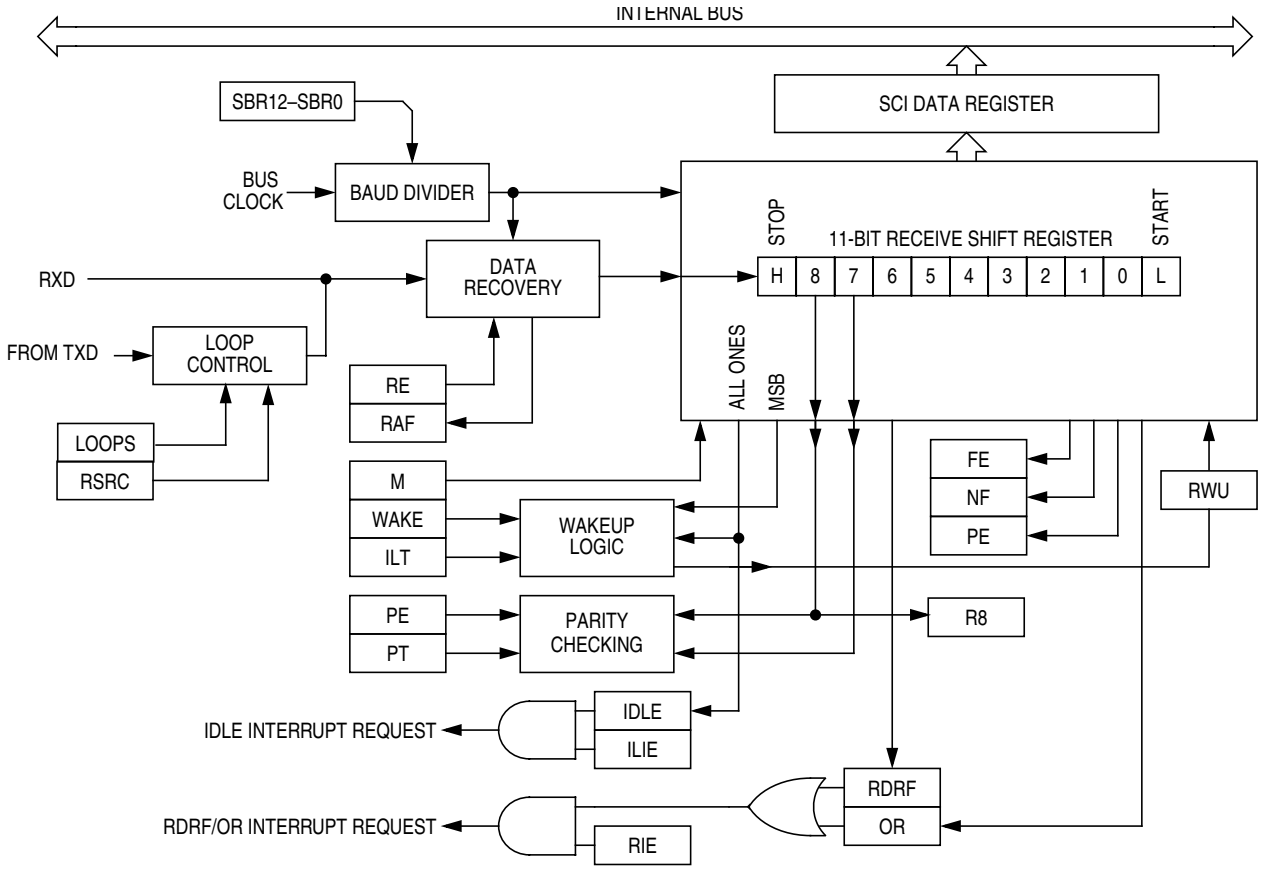


**Figure 13-12. SCI Receiver Block Diagram**

### 13.4.4.1 Receiver Character Length

The SCI receiver can accommodate either 8-bit or 9-bit data characters. The state of the M bit in SCI control register 1 (SCICR1) determines the length of data characters. When receiving 9-bit data, bit R8 in SCI data register high (SCIDRH) is the ninth bit (bit 8).

### 13.4.4.2 Character Reception

During an SCI reception, the receive shift register shifts a frame in from the **Rx input** signal. The SCI data register is the read-only buffer between the internal data bus and the receive shift register.

After a complete frame shifts into the receive shift register, the data portion of the frame transfers to the SCI data register. The receive data register full flag, RDRF, in SCI status register 1 (SCISR1) becomes set, indicating that the received byte can be read. If the receive interrupt enable bit, RIE, in SCI control register 2 (SCICR2) is also set, the RDRF flag generates an RDRF interrupt request.

### 13.4.4.3 Data Sampling

The receiver samples the **Rx input** signal at the RT clock rate. The RT clock is an internal signal with a frequency 16 times the baud rate. To adjust for baud rate mismatch, the RT clock (see Figure 13-13) is re-synchronized:

- After every start bit
- After the receiver detects a data bit change from logic 1 to logic 0 (after the majority of data bit samples at RT8, RT9, and RT10 returns a valid logic 1 and the majority of the next RT8, RT9, and RT10 samples returns a valid logic 0)

To locate the start bit, data recovery logic does an asynchronous search for a logic 0 preceded by three logic 1s.When the falling edge of a possible start bit occurs, the RT clock begins to count to 16.

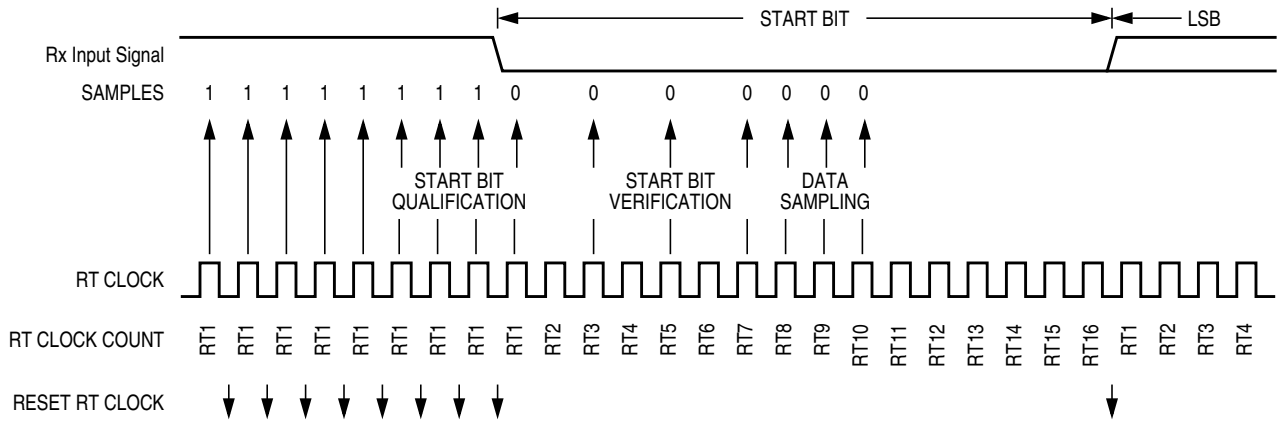


**Figure 13-13. Receiver Data Sampling**

To verify the start bit and to detect noise, data recovery logic takes samples at RT3, RT5, and RT7. Table 13-11 summarizes the results of the start bit verification samples.

**Table 13-11. Start Bit Verification**

| RT3, RT5, and RT7 Samples | Start Bit Verification | Noise Flag |
|---|---|---|
| 000 | Yes | 0 |
| 001 | Yes | 1 |
| 010 | Yes | 1 |
| 011 | No | 0 |

**Table 13-11. Start Bit Verification**

| RT3, RT5, and RT7 Samples | Start Bit Verification | Noise Flag |
|---|---|---|
| 100 | Yes | 1 |
| 101 | No | 0 |
| 110 | No | 0 |
| 111 | No | 0 |

If start bit verification is not successful, the RT clock is reset and a new search for a start bit begins.

To determine the value of a data bit and to detect noise, recovery logic takes samples at RT8, RT9, and RT10. Table 13-12 summarizes the results of the data bit samples.

**Table 13-12. Data Bit Recovery**

| RT8, RT9, and RT10 Samples | Data Bit Determination | Noise Flag |
|---|---|---|
| 000 | 0 | 0 |
| 001 | 0 | 1 |
| 010 | 0 | 1 |
| 011 | 1 | 1 |
| 100 | 0 | 1 |
| 101 | 1 | 1 |
| 110 | 1 | 1 |
| 111 | 1 | 0 |

**NOTE**

The RT8, RT9, and RT10 samples do not affect start bit verification. If any or all of the RT8, RT9, and RT10 start bit samples are logic 1s following a successful start bit verification, the noise flag (NF) is set and the receiver assumes that the bit is a start bit (logic 0).

To verify a stop bit and to detect noise, recovery logic takes samples at RT8, RT9, and RT10. Table 13-13 summarizes the results of the stop bit samples.

**Table 13-13. Stop Bit Recovery**

| RT8, RT9, and RT10 Samples | Framing Error Flag | Noise Flag |
|---|---|---|
| 000 | 1 | 0 |
| 001 | 1 | 1 |
| 010 | 1 | 1 |
| 011 | 0 | 1 |
| 100 | 1 | 1 |
| 101 | 0 | 1 |
| 110 | 0 | 1 |
| 111 | 0 | 0 |

In Figure 13-14 the verification samples RT3 and RT5 determine that the first low detected was noise and not the beginning of a start bit. The RT clock is reset and the start bit search begins again. The noise flag is not set because the noise occurred before the start bit was found.

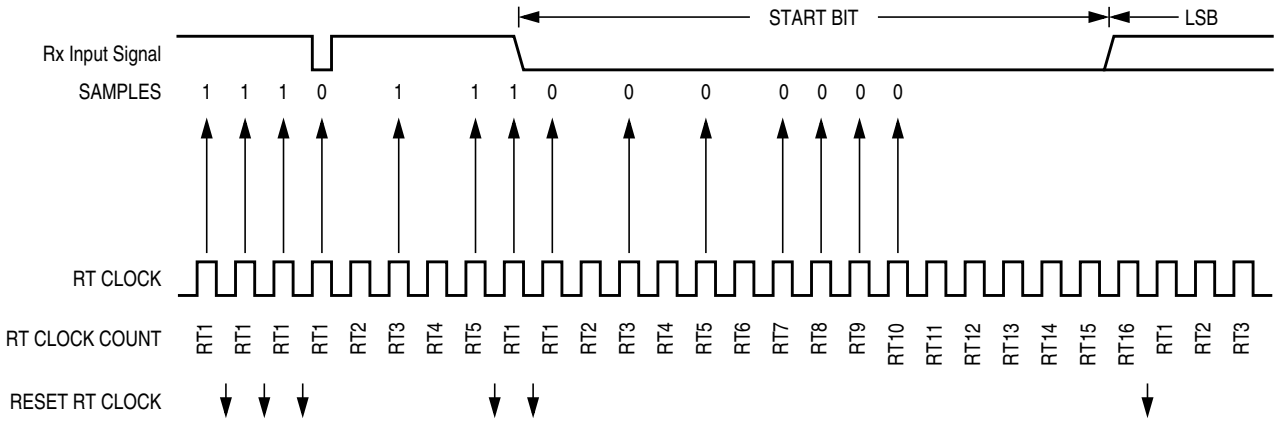


**Figure 13-14. Start Bit Search Example 1**

In Figure 13-15, verification sample at RT3 is high. The RT3 sample sets the noise flag. Although the perceived bit time is misaligned, the data samples RT8, RT9, and RT10 are within the bit time and data recovery is successful.

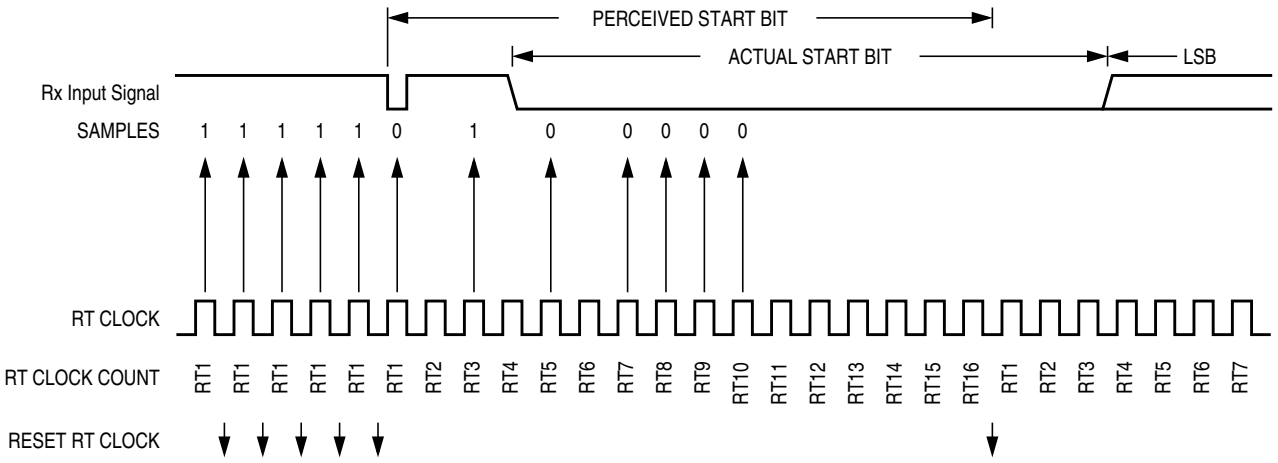


**Figure 13-15. Start Bit Search Example 2**

In Figure 13-16, a large burst of noise is perceived as the beginning of a start bit, although the test sample at RT5 is high. The RT5 sample sets the noise flag. Although this is a worst-case misalignment of perceived bit time, the data samples RT8, RT9, and RT10 are within the bit time and data recovery is successful.

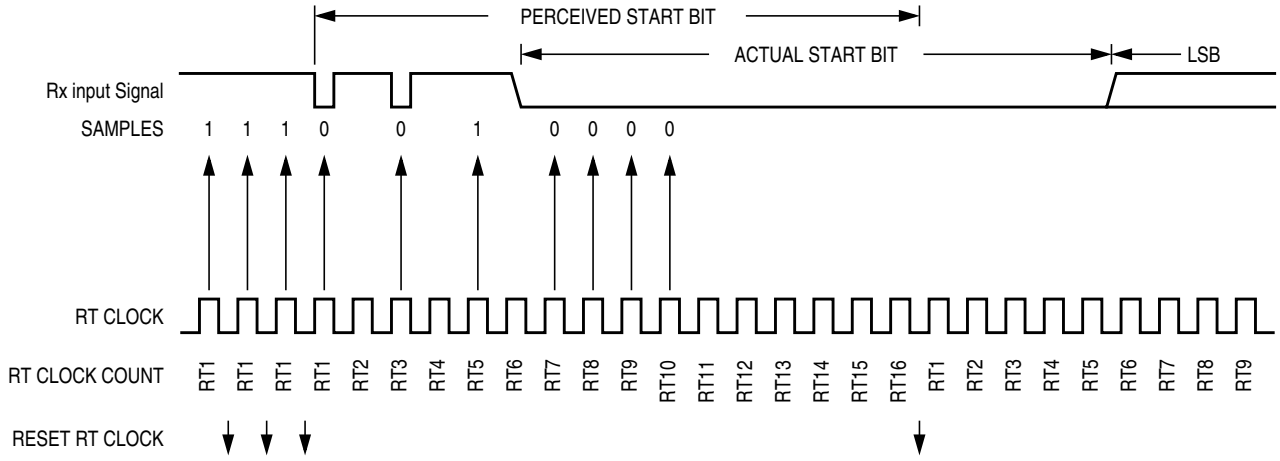


**Figure 13-16. Start Bit Search Example 3**

Figure 13-17 shows the effect of noise early in the start bit time. Although this noise does not affect proper synchronization with the start bit time, it does set the noise flag.

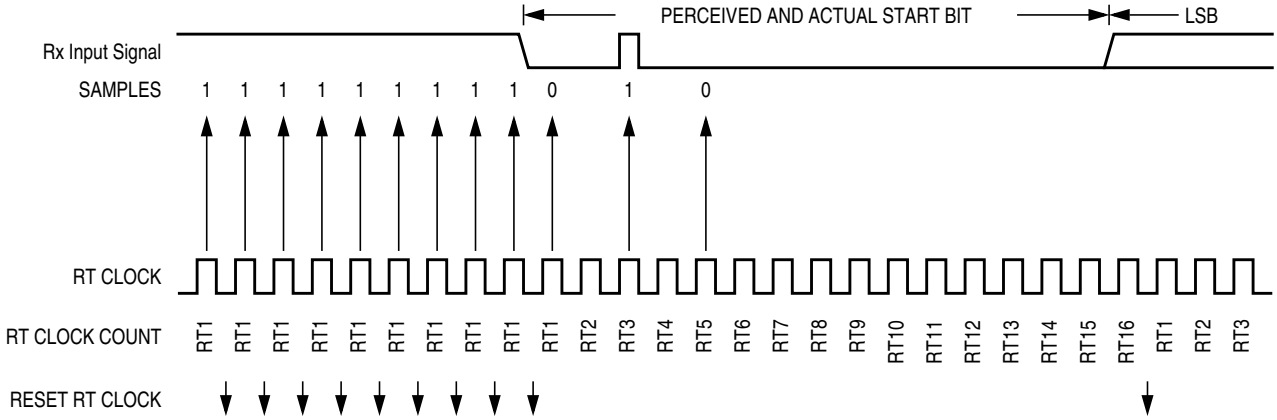


**Figure 13-17. Start Bit Search Example 4**

Figure 13-18 shows a burst of noise near the beginning of the start bit that resets the RT clock. The sample after the reset is low but is not preceded by three high samples that would qualify as a falling edge. Depending on the timing of the start bit search and on the data, the frame may be missed entirely or it may set the framing error flag.

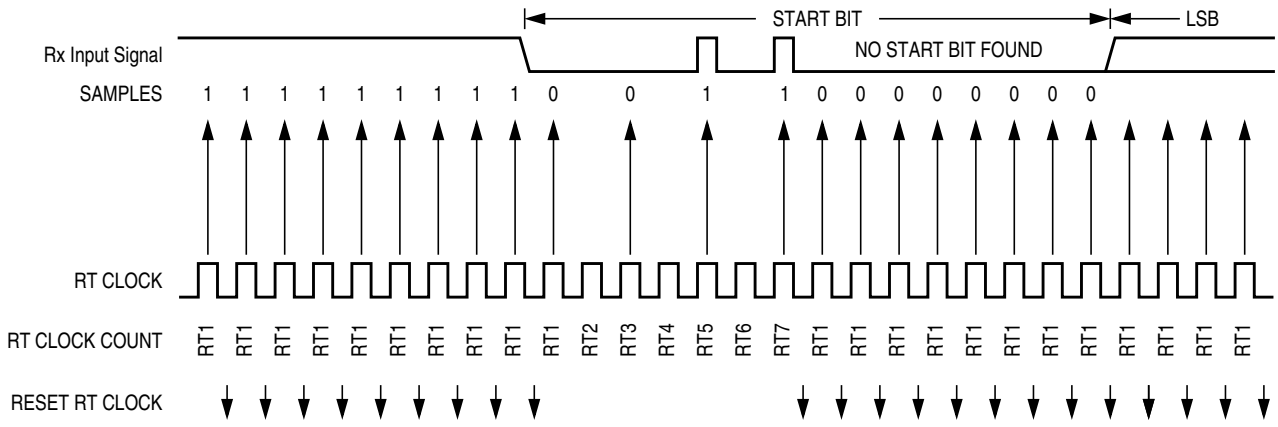


**Figure 13-18. Start Bit Search Example 5**

In Figure 13-19, a noise burst makes the majority of data samples RT8, RT9, and RT10 high. This sets the noise flag but does not reset the RT clock. In start bits only, the RT8, RT9, and RT10 data samples are ignored.

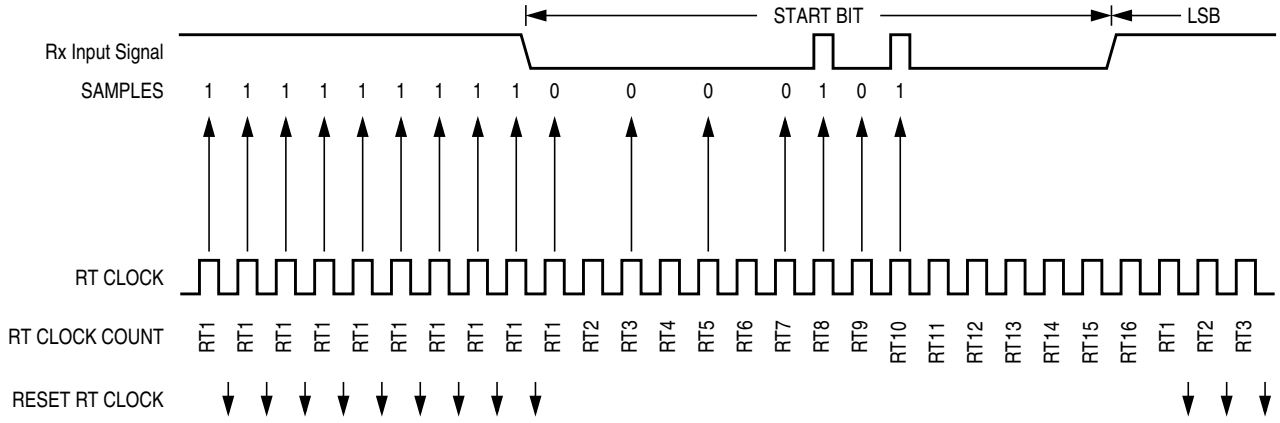


**Figure 13-19. Start Bit Search Example 6**

#### 13.4.4.4 Framing Errors

If the data recovery logic does not detect a logic 1 where the stop bit should be in an incoming frame, it sets the framing error flag, FE, in SCI status register 1 (SCISR1). A break character also sets the FE flag because a break character has no stop bit. The FE flag is set at the same time that the RDRF flag is set.

#### 13.4.4.5 Baud Rate Tolerance

A transmitting device may be operating at a baud rate below or above the receiver baud rate. Accumulated bit time misalignment can cause one of the three stop bit data samples (RT8, RT9, and RT10) to fall outside the actual stop bit.A noise error will occur if the RT8, RT9, and RT10 samples are not all the same logical values. A framing error will occur if the receiver clock is misaligned in such a way that the majority of the RT8, RT9, and RT10 stop bit samples are a logic zero.

As the receiver samples an incoming frame, it re-synchronizes the RT clock on any valid falling edge within the frame. Re synchronization within frames will correct a misalignment between transmitter bit times and receiver bit times.

##### 13.4.4.5.1 Slow Data Tolerance

Figure 13-20 shows how much a slow received frame can be misaligned without causing a noise error or a framing error. The slow stop bit begins at RT8 instead of RT1 but arrives in time for the stop bit data samples at RT8, RT9, and RT10.

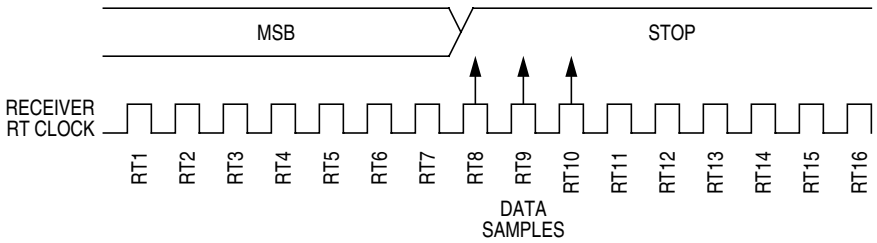


**Figure 13-20. Slow Data**

Let's take RTr as receiver RT clock and RTt as transmitter RT clock.

For an 8-bit data character, it takes the receiver 9 bit times x 16 RTr cycles +7 RTr cycles =151 RTr cycles to start data sampling of the stop bit.

With the misaligned character shown in Figure 13-20, the receiver counts 151 RTr cycles at the point when the count of the transmitting device is 9 bit times x 16 RTt cycles = 144 RTt cycles.

The maximum percent difference between the receiver count and the transmitter count of a slow 8-bit data character with no errors is:

$$((151 - 144) / 151) \times 100 = 4.63\%$$

For a 9-bit data character, it takes the receiver 10 bit times x 16 RTr cycles + 7 RTr cycles = 167 RTr cycles to start data sampling of the stop bit.

With the misaligned character shown in Figure 13-20, the receiver counts 167 RTr cycles at the point when the count of the transmitting device is 10 bit times x 16 RTt cycles = 160 RTt cycles.

The maximum percent difference between the receiver count and the transmitter count of a slow 9-bit character with no errors is:

((167 – 160) / 167) X 100 = 4.19%

#### 13.4.4.5.2 Fast Data Tolerance

Figure 13-21 shows how much a fast received frame can be misaligned. The fast stop bit ends at RT10 instead of RT16 but is still sampled at RT8, RT9, and RT10.

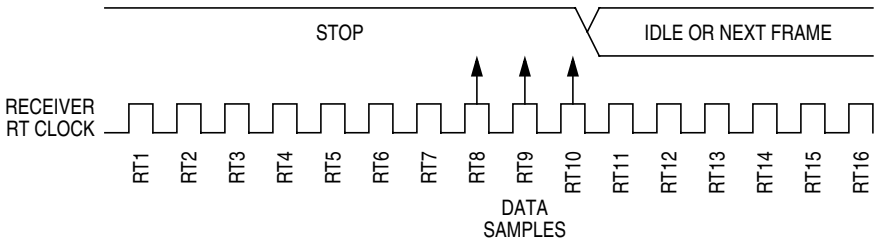


**Figure 13-21. Fast Data**

For an 8-bit data character, it takes the receiver 9 bit times x 16 RTr cycles + 10 RTr cycles = 154 RTr cycles to finish data sampling of the stop bit.

With the misaligned character shown in Figure 13-21, the receiver counts 154 RTr cycles at the point when the count of the transmitting device is 10 bit times x 16 RTt cycles = 160 RTt cycles.

The maximum percent difference between the receiver count and the transmitter count of a fast 8-bit character with no errors is:

((160 – 154) / 160) x 100 = 3.75%

For a 9-bit data character, it takes the receiver 10 bit times x 16 RTr cycles + 10 RTr cycles = 170 RTr cycles to finish data sampling of the stop bit.

With the misaligned character shown in Figure 13-21, the receiver counts 170 RTr cycles at the point when the count of the transmitting device is 11 bit times x 16 RTt cycles = 176 RTt cycles.

The maximum percent difference between the receiver count and the transmitter count of a fast 9-bit character with no errors is:

((176 – 170) / 176) x 100 = 3.40%

### 13.4.4.6 Receiver Wakeup

To enable the SCI to ignore transmissions intended only for other receivers in multiple-receiver systems, the receiver can be put into a standby state. Setting the receiver wakeup bit, RWU, in SCI control register 2 (SCICR2) puts the receiver into standby state during which receiver interrupts are disabled.The SCI will still load the receive data into the SCIDRH/L registers, but it will not set the RDRF flag.

The transmitting device can address messages to selected receivers by including addressing information in the initial frame or frames of each message.

The WAKE bit in SCI control register 1 (SCICR1) determines how the SCI is brought out of the standby state to process an incoming message. The WAKE bit enables either idle line wakeup or address mark wakeup.

#### 13.4.4.6.1 Idle Input Line Wakeup (WAKE = 0)

In this wakeup method, an idle condition on the **Rx Input** signal clears the RWU bit and wakes up the SCI. The initial frame or frames of every message contain addressing information. All receivers evaluate the addressing information, and receivers for which the message is addressed process the frames that follow. Any receiver for which a message is not addressed can set its RWU bit and return to the standby state. The RWU bit remains set and the receiver remains on standby until another idle character appears on the **Rx Input** signal.

Idle line wakeup requires that messages be separated by at least one idle character and that no message contains idle characters.

The idle character that wakes a receiver does not set the receiver idle bit, IDLE, or the receive data register full flag, RDRF.

The idle line type bit, ILT, determines whether the receiver begins counting logic 1s as idle character bits after the start bit or after the stop bit. ILT is in SCI control register 1 (SCICR1).

#### 13.4.4.6.2 Address Mark Wakeup (WAKE = 1)

In this wakeup method, a logic 1 in the most significant bit (msb) position of a frame clears the RWU bit and wakes up the SCI. The logic 1 in the msb position marks a frame as an address frame that contains addressing information. All receivers evaluate the addressing information, and the receivers for which the message is addressed process the frames that follow.Any receiver for which a message is not addressed can set its RWU bit and return to the standby state. The RWU bit remains set and the receiver remains on standby until another address frame appears on the **Rx Input** signal.

The logic 1 msb of an address frame clears the receiver's RWU bit before the stop bit is received and sets the RDRF flag.

Address mark wakeup allows messages to contain idle characters but requires that the msb be reserved for use in address frames.{sci_wake}

**NOTE**

With the WAKE bit clear, setting the RWU bit after the **Rx Input** signal has been idle can cause the receiver to wake up immediately.

### 13.4.5 Single-Wire Operation

Normally, the SCI uses two pins for transmitting and receiving. In single-wire operation, the RXD pin is disconnected from the SCI. The SCI uses the TXD pin for both receiving and transmitting.

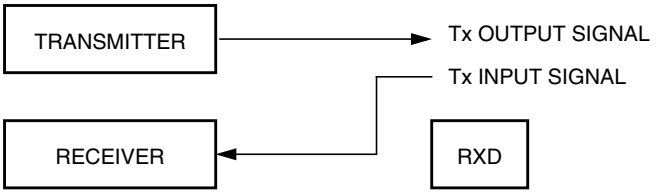


**Figure 13-22. Single-Wire Operation (LOOPS = 1, RSRC = 1)**

Enable single-wire operation by setting the LOOPS bit and the receiver source bit, RSRC, in SCI control register 1 (SCICR1). Setting the LOOPS bit disables the path from the **Rx Input** signal to the receiver. Setting the RSRC bit connects the receiver input to the output of the TXD pin driver. Both the transmitter and receiver must be enabled (TE = 1 and RE = 1).The TXDIR bit (SCISR2[1]) determines whether the TXD pin is going to be used as an input (TXDIR = 0) or an output (TXDIR = 1) in this mode of operation.

### 13.4.6 Loop Operation

In loop operation the transmitter output goes to the receiver input. The **Rx Input** signal is disconnected from the SCI

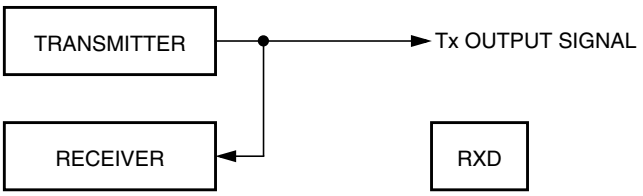


**Figure 13-23. Loop Operation (LOOPS = 1, RSRC = 0)**

Enable loop operation by setting the LOOPS bit and clearing the RSRC bit in SCI control register 1 (SCICR1). Setting the LOOPS bit disables the path from the **Rx Input** signal to the receiver. Clearing the RSRC bit connects the transmitter output to the receiver input. Both the transmitter and receiver must be enabled (TE = 1 and RE = 1).

## 13.5 Initialization Information

### 13.5.1 Reset Initialization

The reset state of each individual bit is listed in Section 13.3, “Memory Map and Registers” which details the registers and their bit fields. All special functions or modes which are initialized during or just following reset are described within this section.

## 13.5.2 Interrupt Operation

### 13.5.2.1 System Level Interrupt Sources

There are five interrupt sources that can generate an SCI interrupt in to the CPU. They are listed in Table 13-14.

**Table 13-14. SCI Interrupt Source**

| Interrupt Source | Flag | Local Enable |
|---|---|---|
| Transmitter | TDRE | TIE |
| Transmitter | TC | TCIE |
| Receiver | RDRF | RIE |
| | OR | |
| Receiver | IDLE | ILIE |

#### 13.5.2.2 Interrupt Descriptions

The SCI only originates interrupt requests. The following is a description of how the SCI makes a request and how the MCU should acknowledge that request. The interrupt vector offset and interrupt number are chip dependent. The SCI only has a single interrupt line (**SCI Interrupt Signal**, active high operation) and all the following interrupts, when generated, are ORed together and issued through that port.

##### 13.5.2.2.1 TDRE Description

The TDRE interrupt is set high by the SCI when the transmit shift register receives a byte from the SCI data register. A TDRE interrupt indicates that the transmit data register (SCIDRH/L) is empty and that a new byte can be written to the SCIDRH/L for transmission.Clear TDRE by reading SCI status register 1 with TDRE set and then writing to SCI data register low (SCIDRL).

##### 13.5.2.2.2 TC Description

The TC interrupt is set by the SCI when a transmission has been completed.A TC interrupt indicates that there is no transmission in progress. TC is set high when the TDRE flag is set and no data, preamble, or break character is being transmitted. When TC is set, the TXD pin becomes idle (logic 1). Clear TC by reading SCI status register 1 (SCISR1) with TC set and then writing to SCI data register low (SCIDRL).TC is cleared automatically when data, preamble, or break is queued and ready to be sent.

##### 13.5.2.2.3 RDRF Description

The RDRF interrupt is set when the data in the receive shift register transfers to the SCI data register. A RDRF interrupt indicates that the received data has been transferred to the SCI data register and that the byte can now be read by the MCU. The RDRF interrupt is cleared by reading the SCI status register one (SCISR1) and then reading SCI data register low (SCIDRL).

##### 13.5.2.2.4 OR Description

The OR interrupt is set when software fails to read the SCI data register before the receive shift register receives the next frame. The newly acquired data in the shift register will be lost in this case, but the data already in the SCI data registers is not affected. The OR interrupt is cleared by reading the SCI status register one (SCISR1) and then reading SCI data register low (SCIDRL).

#### 13.5.2.3 IDLE Description

The IDLE interrupt is set when 10 consecutive logic 1s (if M = 0) or 11 consecutive logic 1s (if M = 1) appear on the receiver input. Once the IDLE is cleared, a valid frame must again set the RDRF flag before an idle condition can set the IDLE flag. Clear IDLE by reading SCI status register 1 (SCISR1) with IDLE set and then reading SCI data register low (SCIDRL).

### 13.5.3 Recovery from Wait Mode

The SCI interrupt request can be used to bring the CPU out of wait mode.

# Chapter 14
# Serial Peripheral Interface (SPIV3) Block Description

## 14.1 Introduction

The SPI module allows a duplex, synchronous, serial communication between the MCU and peripheral devices. Software can poll the SPI status flags or the SPI operation can be interrupt driven.

### 14.1.1 Features

The SPIV3 includes these distinctive features:

- Master mode and slave mode
- Bidirectional mode
- Slave select output
- Mode fault error flag with CPU interrupt capability
- Double-buffered data register
- Serial clock with programmable polarity and phase
- Control of SPI operation during wait mode

### 14.1.2 Modes of Operation

The SPI functions in three modes, run, wait, and stop.

- Run Mode
  This is the basic mode of operation.
- Wait Mode
  SPI operation in wait mode is a configurable low power mode, controlled by the SPISWAI bit located in the SPICR2 register. In wait mode, if the SPISWAI bit is clear, the SPI operates like in Run Mode. If the SPISWAI bit is set, the SPI goes into a power conservative state, with the SPI clock generation turned off. If the SPI is configured as a master, any transmission in progress stops, but is resumed after CPU goes into Run Mode. If the SPI is configured as a slave, reception and transmission of a byte continues, so that the slave stays synchronized to the master.
- Stop Mode
  The SPI is inactive in stop mode for reduced power consumption. If the SPI is configured as a master, any transmission in progress stops, but is resumed after CPU goes into run mode. If the SPI is configured as a slave, reception and transmission of a byte continues, so that the slave stays synchronized to the master.

This is a high level description only, detailed descriptions of operating modes are contained in Section 14.4, “Functional Description.”

### 14.1.3 Block Diagram

Figure 14-1 gives an overview on the SPI architecture. The main parts of the SPI are status, control, and data registers, shifter logic, baud rate generator, master/slave control logic, and port control logic.

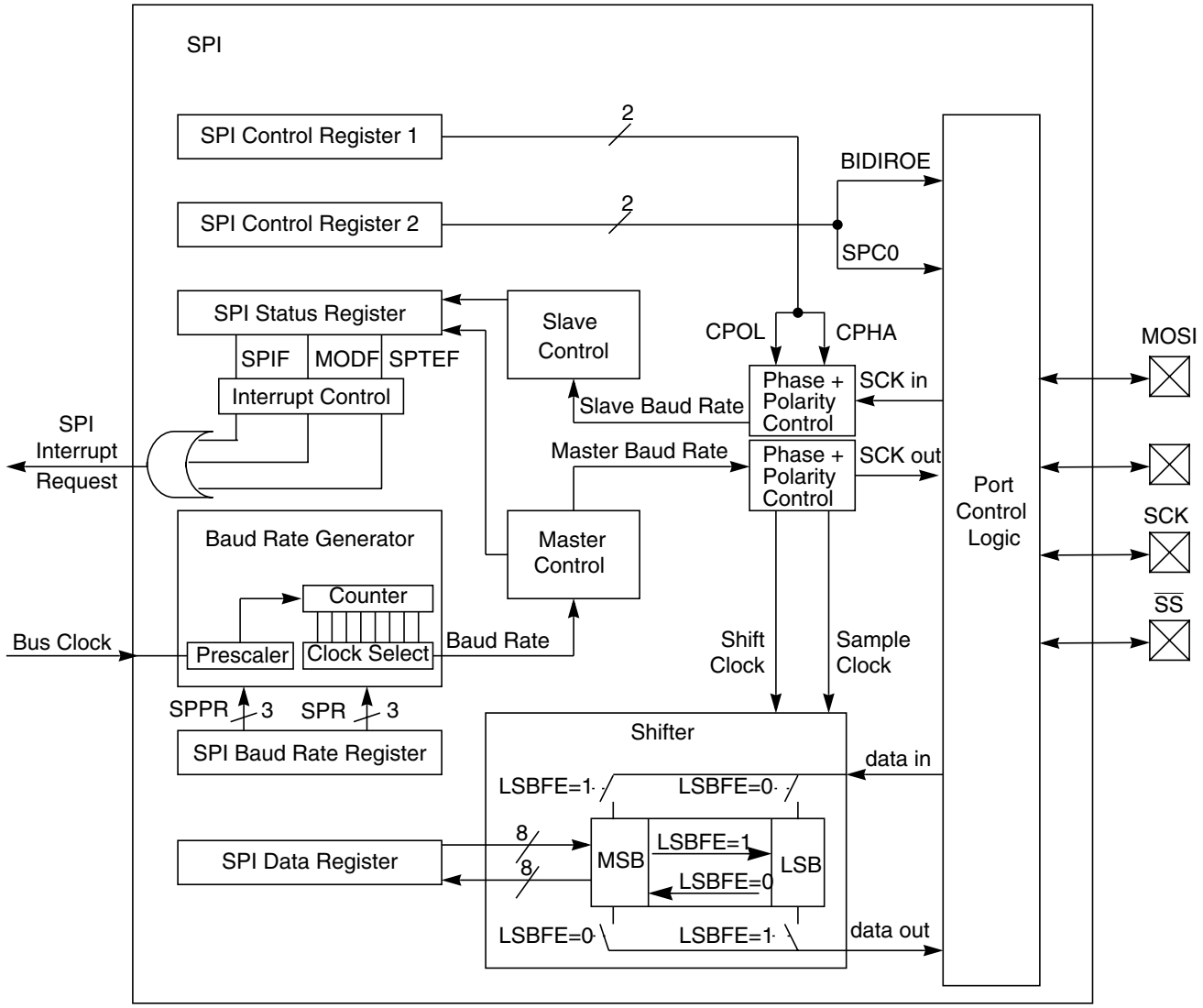


**Figure 14-1. SPI Block Diagram**

## 14.2 External Signal Description

This section lists the name and description of all ports including inputs and outputs that do, or may, connect off chip. The SPIV3 module has a total of four external pins.

### 14.2.1 MOSI — Master Out/Slave In Pin

This pin is used to transmit data out of the SPI module when it is configured as a master and receive data when it is configured as slave.

### 14.2.2 MISO — Master In/Slave Out Pin

This pin is used to transmit data out of the SPI module when it is configured as a slave and receive data when it is configured as master.

### 14.2.3 $\overline{SS}$ — Slave Select Pin

This pin is used to output the select signal from the SPI module to another peripheral with which a data transfer is to take place when its configured as a master and its used as an input to receive the slave select signal when the SPI is configured as slave.

### 14.2.4 SCK — Serial Clock Pin

This pin is used to output the clock with respect to which the SPI transfers data or receive clock in case of slave.

## 14.3 Memory Map and Register Definition

This section provides a detailed description of address space and registers used by the SPI.

The memory map for the SPIV3 is given below in Table 14-1. The address listed for each register is the sum of a base address and an address offset. The base address is defined at the SoC level and the address offset is defined at the module level. Reads from the reserved bits return zeros and writes to the reserved bits have no effect.

### 14.3.1 Module Memory Map

**Table 14-1. SPIV3 Memory Map**

| Address | Use | Access |
|---|---|---|
| 0x0000 | SPI Control Register 1 (SPICR1) | R/W |
| 0x0001 | SPI Control Register 2 (SPICR2) | R/W[1] |
| 0x0002 | SPI Baud Rate Register (SPIBR) | R/W[1] |
| 0x0003 | SPI Status Register (SPISR) | R[2] |
| 0x0004 | Reserved | —[2,3] |
| 0x0005 | SPI Data Register (SPIDR) | R/W |
| 0x0006 | Reserved | —[2,3] |
| 0x0007 | Reserved | —[2,3] |

1. Certain bits are non-writable.
2. Writes to this register are ignored.
3. Reading from this register returns all zeros.

## 14.3.2 Register Descriptions

This section consists of register descriptions in address order. Each description includes a standard register diagram with an associated figure number. Details of register bit and field function follow the register diagrams, in bit order.

| Name | | 7 | 6 | 5 | 4 | 3 | 2 | 1 | 0 |
|---|---|---|---|---|---|---|---|---|---|
| 0x0000 SPICR1 | R/W | SPIE | SPE | SPTIE | MSTR | CPOL | CPHA | SSOE | LSBFE |
| 0x0001 SPICR2 | R | 0 | 0 | 0 | MODFEN | BIDIROE | 0 | SPISWAI | SPC0 |
| | W | | | | | | | | |
| 0x0002 SPIBR | R | 0 | SPPR2 | SPPR1 | SPPR0 | 0 | SPR2 | SPR1 | SPR0 |
| | W | | | | | | | | |
| 0x0003 SPISR | R | SPIF | 0 | SPTEF | MODF | 0 | 0 | 0 | 0 |
| | W | | | | | | | | |
| 0x0004 Reserved | R/W | | | | | | | | |
| 0x0005 SPIDR | R/W | Bit 7 | 6 | 5 | 4 | 3 | 2 | 2 | Bit 0 |
| 0x0006 Reserved | R/W | | | | | | | | |
| 0x0007 Reserved | R/W | | | | | | | | |

= Unimplemented or Reserved

**Figure 14-2. SPI Register Summary**

### 14.3.2.1 SPI Control Register 1 (SPICR1)

Module Base 0x0000

| | 7 | 6 | 5 | 4 | 3 | 2 | 1 | 0 |
|---|---|---|---|---|---|---|---|---|
| R/W | SPIE | SPE | SPTIE | MSTR | CPOL | CPHA | SSOE | LSBFE |
| Reset | 0 | 0 | 0 | 0 | 0 | 1 | 0 | 0 |

**Figure 14-3. SPI Control Register 1 (SPICR1)**

Read: anytime

Write: anytime

**Table 14-2. SPICR1 Field Descriptions**

| Field | Description |
|---|---|
| 7<br>SPIE | **SPI Interrupt Enable Bit** — This bit enables SPI interrupt requests, if SPIF or MODF status flag is set.<br>0 SPI interrupts disabled.<br>1 SPI interrupts enabled. |
| 6<br>SPE | **SPI System Enable Bit** — This bit enables the SPI system and dedicates the SPI port pins to SPI system functions. If SPE is cleared, SPI is disabled and forced into idle state, status bits in SPISR register are reset.<br>0 SPI disabled (lower power consumption).<br>1 SPI enabled, port pins are dedicated to SPI functions. |
| 5<br>SPTIE | **SPI Transmit Interrupt Enable** — This bit enables SPI interrupt requests, if SPTEF flag is set.<br>0 SPTEF interrupt disabled.<br>1 SPTEF interrupt enabled. |
| 4<br>MSTR | **SPI Master/Slave Mode Select Bit** — This bit selects, if the SPI operates in master or slave mode. Switching the SPI from master to slave or vice versa forces the SPI system into idle state.<br>0 SPI is in slave mode<br>1 SPI is in master mode |
| 3<br>CPOL | **SPI Clock Polarity Bit** — This bit selects an inverted or non-inverted SPI clock. To transmit data between SPI modules, the SPI modules must have identical CPOL values. In master mode, a change of this bit will abort a transmission in progress and force the SPI system into idle state.<br>0 Active-high clocks selected. In idle state SCK is low.<br>1 Active-low clocks selected. In idle state SCK is high. |
| 2<br>CPHA | **SPI Clock Phase Bit** — This bit is used to select the SPI clock format. In master mode, a change of this bit will abort a transmission in progress and force the SPI system into idle state.<br>0 Sampling of data occurs at odd edges (1,3,5,...,15) of the SCK clock<br>1 Sampling of data occurs at even edges (2,4,6,...,16) of the SCK clock |
| 1<br>SSOE | **Slave Select Output Enable** — The $\overline{SS}$ output feature is enabled only in master mode, if MODFEN is set, by asserting the SSOE as shown in Table 14-3. In master mode, a change of this bit will abort a transmission in progress and force the SPI system into idle state. |
| 0<br>LSBFE | **LSB-First Enable** — This bit does not affect the position of the MSB and LSB in the data register. Reads and writes of the data register always have the MSB in bit 7. In master mode, a change of this bit will abort a transmission in progress and force the SPI system into idle state.<br>0 Data is transferred most significant bit first.<br>1 Data is transferred least significant bit first. |

**Table 14-3. $\overline{SS}$ Input / Output Selection**

| MODFEN | SSOE | Master Mode | Slave Mode |
|---|---|---|---|
| 0 | 0 | $\overline{SS}$ not used by SPI | $\overline{SS}$ input |
| 0 | 1 | $\overline{SS}$ not used by SPI | $\overline{SS}$ input |
| 1 | 0 | $\overline{SS}$ input with MODF feature | $\overline{SS}$ input |
| 1 | 1 | $\overline{SS}$ is slave select output | $\overline{SS}$ input |

### 14.3.2.2 SPI Control Register 2 (SPICR2)

Module Base 0x0001

| | 7 | 6 | 5 | 4 | 3 | 2 | 1 | 0 |
|---|---|---|---|---|---|---|---|---|
| R | 0 | 0 | 0 | MODFEN | BIDIROE | 0 | SPISWAI | SPC0 |
| W | | | | | | | | |
| Reset | 0 | 0 | 0 | 0 | 0 | 0 | 0 | 0 |

= Unimplemented or Reserved

**Figure 14-4. SPI Control Register 2 (SPICR2)**

Read: anytime

Write: anytime; writes to the reserved bits have no effect

**Table 14-4. SPICR2 Field Descriptions**

| Field | Description |
|---|---|
| 4<br>MODFEN | **Mode Fault Enable Bit** — This bit allows the MODF failure being detected. If the SPI is in master mode and MODFEN is cleared, then the $\overline{SS}$ port pin is not used by the SPI. In slave mode, the $\overline{SS}$ is available only as an input regardless of the value of MODFEN. For an overview on the impact of the MODFEN bit on the $\overline{SS}$ port pin configuration refer to Table 14-3. In master mode, a change of this bit will abort a transmission in progress and force the SPI system into idle state.<br>0 $\overline{SS}$ port pin is not used by the SPI<br>1 $\overline{SS}$ port pin with MODF feature |
| 3<br>BIDIROE | **Output Enable in the Bidirectional Mode of Operation** — This bit controls the MOSI and MISO output buffer of the SPI, when in bidirectional mode of operation (SPC0 is set). In master mode this bit controls the output buffer of the MOSI port, in slave mode it controls the output buffer of the MISO port. In master mode, with SPC0 set, a change of this bit will abort a transmission in progress and force the SPI into idle state.<br>0 Output buffer disabled<br>1 Output buffer enabled |
| 1<br>SPISWAI | **SPI Stop in Wait Mode Bit** — This bit is used for power conservation while in wait mode.<br>0 SPI clock operates normally in wait mode<br>1 Stop SPI clock generation when in wait mode |
| 0<br>SPC0 | **Serial Pin Control Bit 0** — This bit enables bidirectional pin configurations as shown in Table 14-5. In master mode, a change of this bit will abort a transmission in progress and force the SPI system into idle state |

**Table 14-5. Bidirectional Pin Configurations**

| Pin Mode | SPC0 | BIDIROE | MISO | MOSI |
|---|---|---|---|---|
| **Master Mode of Operation** | | | | |
| Normal | 0 | X | Master In | Master Out |
| Bidirectional | 1 | 0 | MISO not used by SPI | Master In |
| | | 1 | | Master I/O |
| **Slave Mode of Operation** | | | | |
| Normal | 0 | X | Slave Out | Slave In |

**Table 14-5. Bidirectional Pin Configurations (continued)**

| Pin Mode | SPC0 | BIDIROE | MISO | MOSI |
|---|---|---|---|---|
| Bidirectional | 1 | 0 | Slave In | MOSI not used by SPI |
| | | 1 | Slave I/O | |

### 14.3.2.3 SPI Baud Rate Register (SPIBR)

Module Base 0x0002

| | 7 | 6 | 5 | 4 | 3 | 2 | 1 | 0 |
|---|---|---|---|---|---|---|---|---|
| R | 0 | SPPR2 | SPPR1 | SPPR0 | 0 | SPR2 | SPR1 | SPR0 |
| W | | | | | | | | |
| Reset | 0 | 0 | 0 | 0 | 0 | 0 | 0 | 0 |

= Unimplemented or Reserved

**Figure 14-5. SPI Baud Rate Register (SPIBR)**

Read: anytime

Write: anytime; writes to the reserved bits have no effect

**Table 14-6. SPIBR Field Descriptions**

| Field | Description |
|---|---|
| 6:4<br>SPPR[2:0] | **SPI Baud Rate Preselection Bits** — These bits specify the SPI baud rates as shown in Table 14-7. In master mode, a change of these bits will abort a transmission in progress and force the SPI system into idle state. |
| 2:0<br>SPR[2:0} | **SPI Baud Rate Selection Bits** — These bits specify the SPI baud rates as shown in Table 14-7. In master mode, a change of these bits will abort a transmission in progress and force the SPI system into idle state. |

The baud rate divisor equation is as follows:

$$\text{BaudRateDivisor} = (\text{SPPR} + 1) \bullet 2^{(\text{SPR} + 1)}$$

The baud rate can be calculated with the following equation:

$$\text{Baud Rate} = \text{BusClock} / \text{BaudRateDivisor}$$

**Table 14-7. Example SPI Baud Rate Selection (25 MHz Bus Clock)**

| SPPR2 | SPPR1 | SPPR0 | SPR2 | SPR1 | SPR0 | Baud Rate Divisor | Baud Rate |
|---|---|---|---|---|---|---|---|
| 0 | 0 | 0 | 0 | 0 | 0 | 2 | 12.5 MHz |
| 0 | 0 | 0 | 0 | 0 | 1 | 4 | 6.25 MHz |
| 0 | 0 | 0 | 0 | 1 | 0 | 8 | 3.125 MHz |
| 0 | 0 | 0 | 0 | 1 | 1 | 16 | 1.5625 MHz |
| 0 | 0 | 0 | 1 | 0 | 0 | 32 | 781.25 kHz |
| 0 | 0 | 0 | 1 | 0 | 1 | 64 | 390.63 kHz |
| 0 | 0 | 0 | 1 | 1 | 0 | 128 | 195.31 kHz |
| 0 | 0 | 0 | 1 | 1 | 1 | 256 | 97.66 kHz |
| 0 | 0 | 1 | 0 | 0 | 0 | 4 | 6.25 MHz |
| 0 | 0 | 1 | 0 | 0 | 1 | 8 | 3.125 MHz |
| 0 | 0 | 1 | 0 | 1 | 0 | 16 | 1.5625 MHz |
| 0 | 0 | 1 | 0 | 1 | 1 | 32 | 781.25 kHz |
| 0 | 0 | 1 | 1 | 0 | 0 | 64 | 390.63 kHz |
| 0 | 0 | 1 | 1 | 0 | 1 | 128 | 195.31 kHz |
| 0 | 0 | 1 | 1 | 1 | 0 | 256 | 97.66 kHz |
| 0 | 0 | 1 | 1 | 1 | 1 | 512 | 48.83 kHz |
| 0 | 1 | 0 | 0 | 0 | 0 | 6 | 4.16667 MHz |
| 0 | 1 | 0 | 0 | 0 | 1 | 12 | 2.08333 MHz |
| 0 | 1 | 0 | 0 | 1 | 0 | 24 | 1.04167 MHz |
| 0 | 1 | 0 | 0 | 1 | 1 | 48 | 520.83 kHz |
| 0 | 1 | 0 | 1 | 0 | 0 | 96 | 260.42 kHz |
| 0 | 1 | 0 | 1 | 0 | 1 | 192 | 130.21 kHz |
| 0 | 1 | 0 | 1 | 1 | 0 | 384 | 65.10 kHz |
| 0 | 1 | 0 | 1 | 1 | 1 | 768 | 32.55 kHz |
| 0 | 1 | 1 | 0 | 0 | 0 | 8 | 3.125 MHz |
| 0 | 1 | 1 | 0 | 0 | 1 | 16 | 1.5625 MHz |
| 0 | 1 | 1 | 0 | 1 | 0 | 32 | 781.25 kHz |
| 0 | 1 | 1 | 0 | 1 | 1 | 64 | 390.63 kHz |
| 0 | 1 | 1 | 1 | 0 | 0 | 128 | 195.31 kHz |
| 0 | 1 | 1 | 1 | 0 | 1 | 256 | 97.66 kHz |
| 0 | 1 | 1 | 1 | 1 | 0 | 512 | 48.83 kHz |
| 0 | 1 | 1 | 1 | 1 | 1 | 1024 | 24.41 kHz |
| 1 | 0 | 0 | 0 | 0 | 0 | 10 | 2.5 MHz |
| 1 | 0 | 0 | 0 | 0 | 1 | 20 | 1.25 MHz |
| 1 | 0 | 0 | 0 | 1 | 0 | 40 | 625 kHz |
| 1 | 0 | 0 | 0 | 1 | 1 | 80 | 312.5 kHz |
| 1 | 0 | 0 | 1 | 0 | 0 | 160 | 156.25 kHz |
| 1 | 0 | 0 | 1 | 0 | 1 | 320 | 78.13 kHz |
| 1 | 0 | 0 | 1 | 1 | 0 | 640 | 39.06 kHz |

**Table 14-7. Example SPI Baud Rate Selection (25 MHz Bus Clock) (continued)**

| SPPR2 | SPPR1 | SPPR0 | SPR2 | SPR1 | SPR0 | Baud Rate Divisor | Baud Rate |
|---|---|---|---|---|---|---|---|
| 1 | 0 | 0 | 1 | 1 | 1 | 1280 | 19.53 kHz |
| 1 | 0 | 1 | 0 | 0 | 0 | 12 | 2.08333 MHz |
| 1 | 0 | 1 | 0 | 0 | 1 | 24 | 1.04167 MHz |
| 1 | 0 | 1 | 0 | 1 | 0 | 48 | 520.83 kHz |
| 1 | 0 | 1 | 0 | 1 | 1 | 96 | 260.42 kHz |
| 1 | 0 | 1 | 1 | 0 | 0 | 192 | 130.21 kHz |
| 1 | 0 | 1 | 1 | 0 | 1 | 384 | 65.10 kHz |
| 1 | 0 | 1 | 1 | 1 | 0 | 768 | 32.55 kHz |
| 1 | 0 | 1 | 1 | 1 | 1 | 1536 | 16.28 kHz |
| 1 | 1 | 0 | 0 | 0 | 0 | 14 | 1.78571 MHz |
| 1 | 1 | 0 | 0 | 0 | 1 | 28 | 892.86 kHz |
| 1 | 1 | 0 | 0 | 1 | 0 | 56 | 446.43 kHz |
| 1 | 1 | 0 | 0 | 1 | 1 | 112 | 223.21 kHz |
| 1 | 1 | 0 | 1 | 0 | 0 | 224 | 111.61 kHz |
| 1 | 1 | 0 | 1 | 0 | 1 | 448 | 55.80 kHz |
| 1 | 1 | 0 | 1 | 1 | 0 | 896 | 27.90 kHz |
| 1 | 1 | 0 | 1 | 1 | 1 | 1792 | 13.95 kHz |
| 1 | 1 | 1 | 0 | 0 | 0 | 16 | 1.5625 MHz |
| 1 | 1 | 1 | 0 | 0 | 1 | 32 | 781.25 kHz |
| 1 | 1 | 1 | 0 | 1 | 0 | 64 | 390.63 kHz |
| 1 | 1 | 1 | 0 | 1 | 1 | 128 | 195.31 kHz |
| 1 | 1 | 1 | 1 | 0 | 0 | 256 | 97.66 kHz |
| 1 | 1 | 1 | 1 | 0 | 1 | 512 | 48.83 kHz |
| 1 | 1 | 1 | 1 | 1 | 0 | 1024 | 24.41 kHz |
| 1 | 1 | 1 | 1 | 1 | 1 | 2048 | 12.21 kHz |

**NOTE**

In slave mode of SPI S-clock speed DIV2 is not supported.

### 14.3.2.4 SPI Status Register (SPISR)

Module Base 0x0003

| | 7 | 6 | 5 | 4 | 3 | 2 | 1 | 0 |
|---|---|---|---|---|---|---|---|---|
| R | SPIF | 0 | SPTEF | MODF | 0 | 0 | 0 | 0 |
| W | | | | | | | | |
| Reset | 0 | 0 | 1 | 0 | 0 | 0 | 0 | 0 |

= Unimplemented or Reserved

**Figure 14-6. SPI Status Register (SPISR)**

Read: anytime

Write: has no effect

**Table 14-8. SPISR Field Descriptions**

| Field | Description |
|---|---|
| 7<br>SPIF | **SPIF Interrupt Flag** — This bit is set after a received data byte has been transferred into the SPI Data Register. This bit is cleared by reading the SPISR register (with SPIF set) followed by a read access to the SPI Data Register.<br>0 Transfer not yet complete<br>1 New data copied to SPIDR |
| 5<br>SPTEF | **SPI Transmit Empty Interrupt Flag** — If set, this bit indicates that the transmit data register is empty. To clear this bit and place data into the transmit data register, SPISR has to be read with SPTEF = 1, followed by a write to SPIDR. Any write to the SPI Data Register without reading SPTEF = 1, is effectively ignored.<br>0 SPI Data register not empty<br>1 SPI Data register empty |
| 4<br>MODF | **Mode Fault Flag** — This bit is set if the $\overline{SS}$ input becomes low while the SPI is configured as a master and mode fault detection is enabled, MODFEN bit of SPICR2 register is set. Refer to MODFEN bit description in Section 14.3.2.2, "SPI Control Register 2 (SPICR2)." The flag is cleared automatically by a read of the SPI Status Register (with MODF set) followed by a write to the SPI Control Register 1.<br>0 Mode fault has not occurred.<br>1 Mode fault has occurred. |

### 14.3.2.5 SPI Data Register (SPIDR)

Module Base 0x0005

| | 7 | 6 | 5 | 4 | 3 | 2 | 1 | 0 |
|---|---|---|---|---|---|---|---|---|
| R<br>W | Bit 7 | 6 | 5 | 4 | 3 | 2 | 2 | Bit 0 |
| Reset | 0 | 0 | 0 | 0 | 0 | 0 | 0 | 0 |

= Unimplemented or Reserved

**Figure 14-7. SPI Data Register (SPIDR)**

Read: anytime; normally read only after SPIF is set

Write: anytime

The SPI Data Register is both the input and output register for SPI data. A write to this register allows a data byte to be queued and transmitted. For a SPI configured as a master, a queued data byte is transmitted immediately after the previous transmission has completed. The SPI Transmitter Empty Flag SPTEF in the SPISR register indicates when the SPI Data Register is ready to accept new data.

Reading the data can occur anytime from after the SPIF is set to before the end of the next transfer. If the SPIF is not serviced by the end of the successive transfers, those data bytes are lost and the data within the SPIDR retains the first byte until SPIF is serviced.

## 14.4 Functional Description

The SPI module allows a duplex, synchronous, serial communication between the MCU and peripheral devices. Software can poll the SPI status flags or SPI operation can be interrupt driven.

The SPI system is enabled by setting the SPI enable (SPE) bit in SPI Control Register 1. While SPE bit is set, the four associated SPI port pins are dedicated to the SPI function as:

- Slave select ($\overline{SS}$)
- Serial clock (SCK)
- Master out/slave in (MOSI)
- Master in/slave out (MISO)

The main element of the SPI system is the SPI Data Register. The 8-bit data register in the master and the 8-bit data register in the slave are linked by the MOSI and MISO pins to form a distributed 16-bit register. When a data transfer operation is performed, this 16-bit register is serially shifted eight bit positions by the S-clock from the master, so data is exchanged between the master and the slave. Data written to the master SPI Data Register becomes the output data for the slave, and data read from the master SPI Data Register after a transfer operation is the input data from the slave.

A read of SPISR with SPTEF = 1 followed by a write to SPIDR puts data into the transmit data register. When a transfer is complete, received data is moved into the receive data register. Data may be read from this double-buffered system any time before the next transfer has completed. This 8-bit data register acts as the SPI receive data register for reads and as the SPI transmit data register for writes. A single SPI register address is used for reading data from the read data buffer and for writing data to the transmit data register.

The clock phase control bit (CPHA) and a clock polarity control bit (CPOL) in the SPI Control Register 1 (SPICR1) select one of four possible clock formats to be used by the SPI system. The CPOL bit simply selects a non-inverted or inverted clock. The CPHA bit is used to accommodate two fundamentally different protocols by sampling data on odd numbered SCK edges or on even numbered SCK edges (see Section 14.4.3, “Transmission Formats”).

The SPI can be configured to operate as a master or as a slave. When the MSTR bit in SPI Control Register1 is set, master mode is selected, when the MSTR bit is clear, slave mode is selected.

### 14.4.1 Master Mode

The SPI operates in master mode when the MSTR bit is set. Only a master SPI module can initiate transmissions. A transmission begins by writing to the master SPI Data Register. If the shift register is empty, the byte immediately transfers to the shift register. The byte begins shifting out on the MOSI pin under the control of the serial clock.

- S-clock

  The SPR2, SPR1, and SPR0 baud rate selection bits in conjunction with the SPPR2, SPPR1, and SPPR0 baud rate preselection bits in the SPI Baud Rate register control the baud rate generator and determine the speed of the transmission. The SCK pin is the SPI clock output. Through the SCK pin, the baud rate generator of the master controls the shift register of the slave peripheral.
- MOSI and MISO Pins

  In master mode, the function of the serial data output pin (MOSI) and the serial data input pin (MISO) is determined by the SPC0 and BIDIROE control bits.
- $\overline{SS}$ Pin

  If MODFEN and SSOE bit are set, the $\overline{SS}$ pin is configured as slave select output. The $\overline{SS}$ output becomes low during each transmission and is high when the SPI is in idle state.

  If MODFEN is set and SSOE is cleared, the $\overline{SS}$ pin is configured as input for detecting mode fault error. If the $\overline{SS}$ input becomes low this indicates a mode fault error where another master tries to drive the MOSI and SCK lines. In this case, the SPI immediately switches to slave mode, by clearing the MSTR bit and also disables the slave output buffer MISO (or SISO in bidirectional mode). So the result is that all outputs are disabled and SCK, MOSI and MISO are inputs. If a transmission is in progress when the mode fault occurs, the transmission is aborted and the SPI is forced into idle state.

This mode fault error also sets the mode fault (MODF) flag in the SPI Status Register (SPISR). If the SPI interrupt enable bit (SPIE) is set when the MODF flag gets set, then an SPI interrupt sequence is also requested.

When a write to the SPI Data Register in the master occurs, there is a half SCK-cycle delay. After the delay, SCK is started within the master. The rest of the transfer operation differs slightly, depending on the clock format specified by the SPI clock phase bit, CPHA, in SPI Control Register 1 (see Section 14.4.3, “Transmission Formats”).

**NOTE**

A change of the bits CPOL, CPHA, SSOE, LSBFE, MODFEN, SPC0, BIDIROE with SPC0 set, SPPR2–SPPR0 and SPR2–SPR0 in master mode will abort a transmission in progress and force the SPI into idle state. The remote slave cannot detect this, therefore the master has to ensure that the remote slave is set back to idle state.

### 14.4.2 Slave Mode

The SPI operates in slave mode when the MSTR bit in SPI Control Register1 is clear.

- SCK Clock

  In slave mode, SCK is the SPI clock input from the master.
- MISO and MOSI Pins

  In slave mode, the function of the serial data output pin (MISO) and serial data input pin (MOSI) is determined by the SPC0 bit and BIDIROE bit in SPI Control Register 2.
- $\overline{SS}$ Pin

  The $\overline{SS}$ pin is the slave select input. Before a data transmission occurs, the $\overline{SS}$ pin of the slave SPI must be low. $\overline{SS}$ must remain low until the transmission is complete. If $\overline{SS}$ goes high, the SPI is forced into idle state.

  The $\overline{SS}$ input also controls the serial data output pin, if $\overline{SS}$ is high (not selected), the serial data output pin is high impedance, and, if $\overline{SS}$ is low the first bit in the SPI Data Register is driven out of the serial data output pin. Also, if the slave is not selected ($\overline{SS}$ is high), then the SCK input is ignored and no internal shifting of the SPI shift register takes place.

Although the SPI is capable of duplex operation, some SPI peripherals are capable of only receiving SPI data in a slave mode. For these simpler devices, there is no serial data out pin.

**NOTE**

When peripherals with duplex capability are used, take care not to simultaneously enable two receivers whose serial outputs drive the same system slave's serial data output line.

As long as no more than one slave device drives the system slave's serial data output line, it is possible for several slaves to receive the same transmission from a master, although the master would not receive return information from all of the receiving slaves.

If the CPHA bit in SPI Control Register 1 is clear, odd numbered edges on the SCK input cause the data at the serial data input pin to be latched. Even numbered edges cause the value previously latched from the serial data input pin to shift into the LSB or MSB of the SPI shift register, depending on the LSBFE bit.

If the CPHA bit is set, even numbered edges on the SCK input cause the data at the serial data input pin to be latched. Odd numbered edges cause the value previously latched from the serial data input pin to shift into the LSB or MSB of the SPI shift register, depending on the LSBFE bit.

When CPHA is set, the first edge is used to get the first data bit onto the serial data output pin. When CPHA is clear and the $\overline{SS}$ input is low (slave selected), the first bit of the SPI data is driven out of the serial data output pin. After the eighth shift, the transfer is considered complete and the received data is transferred into the SPI Data Register. To indicate transfer is complete, the SPIF flag in the SPI Status Register is set.

**NOTE**

A change of the bits CPOL, CPHA, SSOE, LSBFE, MODFEN, SPC0 and BIDIROE with SPC0 set in slave mode will corrupt a transmission in progress and has to be avoided.

### 14.4.3 Transmission Formats

During an SPI transmission, data is transmitted (shifted out serially) and received (shifted in serially) simultaneously. The serial clock (SCK) synchronizes shifting and sampling of the information on the two serial data lines. A slave select line allows selection of an individual slave SPI device, slave devices that are not selected do not interfere with SPI bus activities. Optionally, on a master SPI device, the slave select line can be used to indicate multiple-master bus contention.

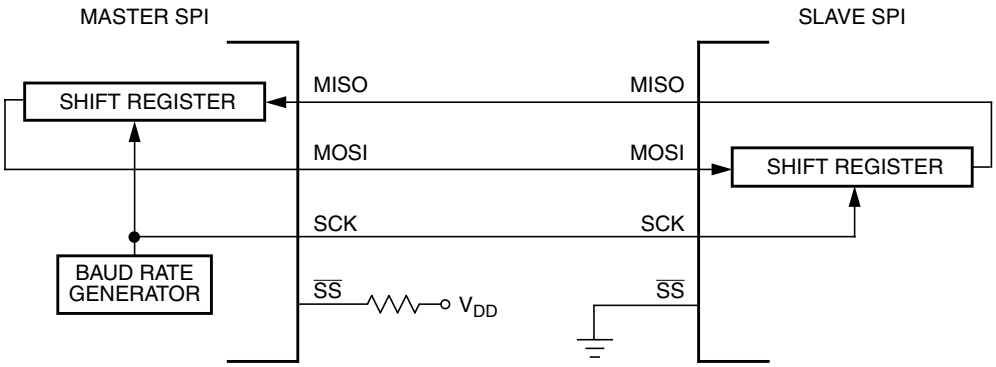


**Figure 14-8. Master/Slave Transfer Block Diagram**

#### 14.4.3.1 Clock Phase and Polarity Controls

Using two bits in the SPI Control Register1, software selects one of four combinations of serial clock phase and polarity.

The CPOL clock polarity control bit specifies an active high or low clock and has no significant effect on the transmission format.

The CPHA clock phase control bit selects one of two fundamentally different transmission formats.

Clock phase and polarity should be identical for the master SPI device and the communicating slave device. In some cases, the phase and polarity are changed between transmissions to allow a master device to communicate with peripheral slaves having different requirements.

#### 14.4.3.2 CPHA = 0 Transfer Format

The first edge on the SCK line is used to clock the first data bit of the slave into the master and the first data bit of the master into the slave. In some peripherals, the first bit of the slave's data is available at the slave's data out pin as soon as the slave is selected. In this format, the first SCK edge is issued a half cycle after $\overline{SS}$ has become low.

A half SCK cycle later, the second edge appears on the SCK line. When this second edge occurs, the value previously latched from the serial data input pin is shifted into the LSB or MSB of the shift register, depending on LSBFE bit.

After this second edge, the next bit of the SPI master data is transmitted out of the serial data output pin of the master to the serial input pin on the slave. This process continues for a total of 16 edges on the SCK line, with data being latched on odd numbered edges and shifted on even numbered edges.

Data reception is double buffered. Data is shifted serially into the SPI shift register during the transfer and is transferred to the parallel SPI Data Register after the last bit is shifted in.

After the 16th (last) SCK edge:

- Data that was previously in the master SPI Data Register should now be in the slave data register and the data that was in the slave data register should be in the master.
- The SPIF flag in the SPI Status Register is set indicating that the transfer is complete.

Figure 14-9 is a timing diagram of an SPI transfer where CPHA = 0. SCK waveforms are shown for CPOL = 0 and CPOL = 1. The diagram may be interpreted as a master or slave timing diagram because the SCK, MISO, and MOSI pins are connected directly between the master and the slave. The MISO signal is the output from the slave and the MOSI signal is the output from the master. The $\overline{SS}$ pin of the master must be either high or reconfigured as a general-purpose output not affecting the SPI.

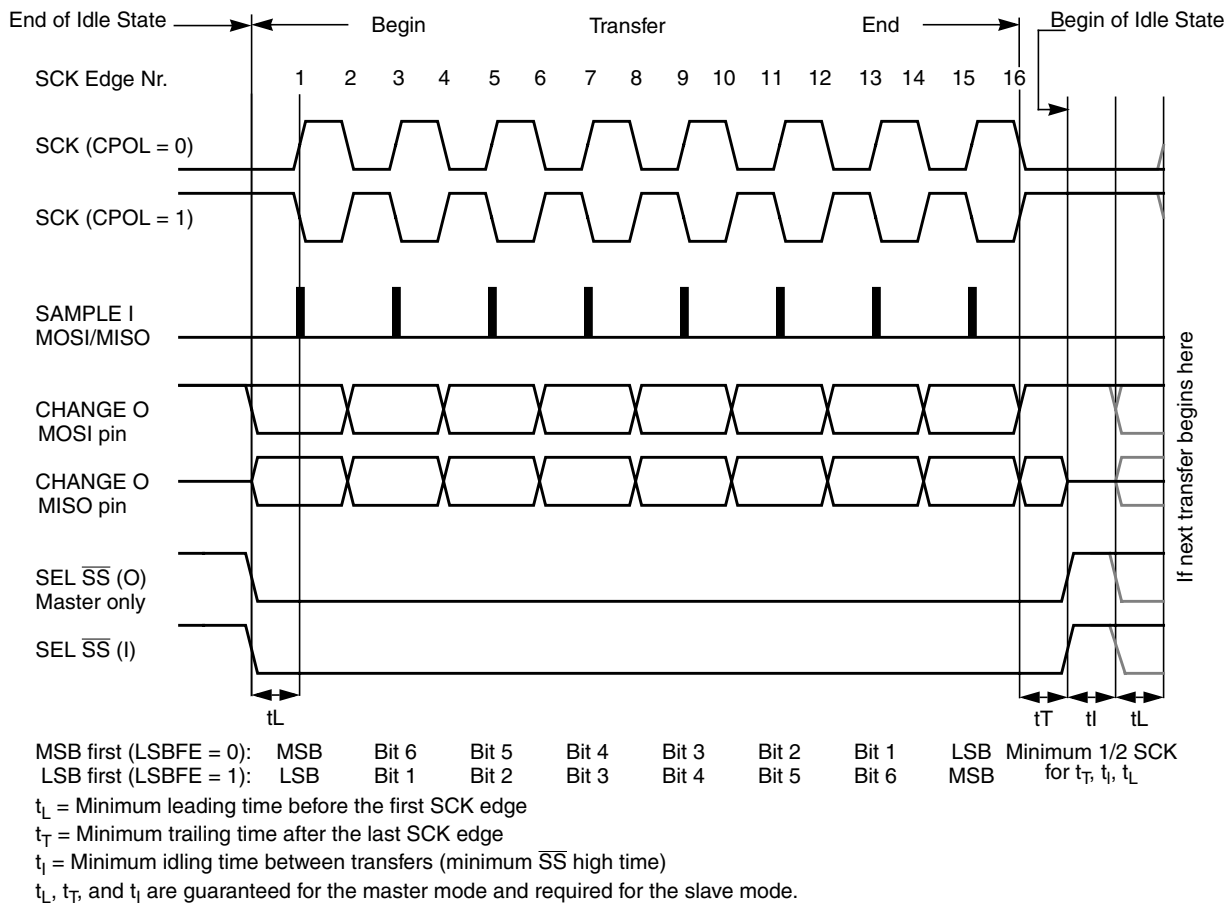


**Figure 14-9. SPI Clock Format 0 (CPHA = 0)**

In slave mode, if the $\overline{SS}$ line is not deasserted between the successive transmissions then the content of the SPI Data Register is not transmitted, instead the last received byte is transmitted. If the $\overline{SS}$ line is deasserted for at least minimum idle time (half SCK cycle) between successive transmissions then the content of the SPI Data Register is transmitted.

In master mode, with slave select output enabled the $\overline{SS}$ line is always deasserted and reasserted between successive transfers for at least minimum idle time.

#### 14.4.3.3 CPHA = 1 Transfer Format

Some peripherals require the first SCK edge before the first data bit becomes available at the data out pin, the second edge clocks data into the system. In this format, the first SCK edge is issued by setting the CPHA bit at the beginning of the 8-cycle transfer operation.

The first edge of SCK occurs immediately after the half SCK clock cycle synchronization delay. This first edge commands the slave to transfer its first data bit to the serial data input pin of the master.

A half SCK cycle later, the second edge appears on the SCK pin. This is the latching edge for both the master and slave.

When the third edge occurs, the value previously latched from the serial data input pin is shifted into the LSB or MSB of the SPI shift register, depending on LSBFE bit. After this edge, the next bit of the master data is coupled out of the serial data output pin of the master to the serial input pin on the slave.

This process continues for a total of 16 edges on the SCK line with data being latched on even numbered edges and shifting taking place on odd numbered edges.

Data reception is double buffered, data is serially shifted into the SPI shift register during the transfer and is transferred to the parallel SPI Data Register after the last bit is shifted in.

After the 16th SCK edge:

- Data that was previously in the SPI Data Register of the master is now in the data register of the slave, and data that was in the data register of the slave is in the master.
- The SPIF flag bit in SPISR is set indicating that the transfer is complete.

Figure 14-10 shows two clocking variations for CPHA = 1. The diagram may be interpreted as a master or slave timing diagram because the SCK, MISO, and MOSI pins are connected directly between the master and the slave. The MISO signal is the output from the slave, and the MOSI signal is the output from the master. The $\overline{SS}$ line is the slave select input to the slave. The $\overline{SS}$ pin of the master must be either high or reconfigured as a general-purpose output not affecting the SPI.

The $\overline{SS}$ line can remain active low between successive transfers (can be tied low at all times). This format is sometimes preferred in systems having a single fixed master and a single slave that drive the MISO data line.

- Back-to-back transfers in master mode

In master mode, if a transmission has completed and a new data byte is available in the SPI Data Register, this byte is send out immediately without a trailing and minimum idle time.

The SPI interrupt request flag (SPIF) is common to both the master and slave modes. SPIF gets set one half SCK cycle after the last SCK edge.

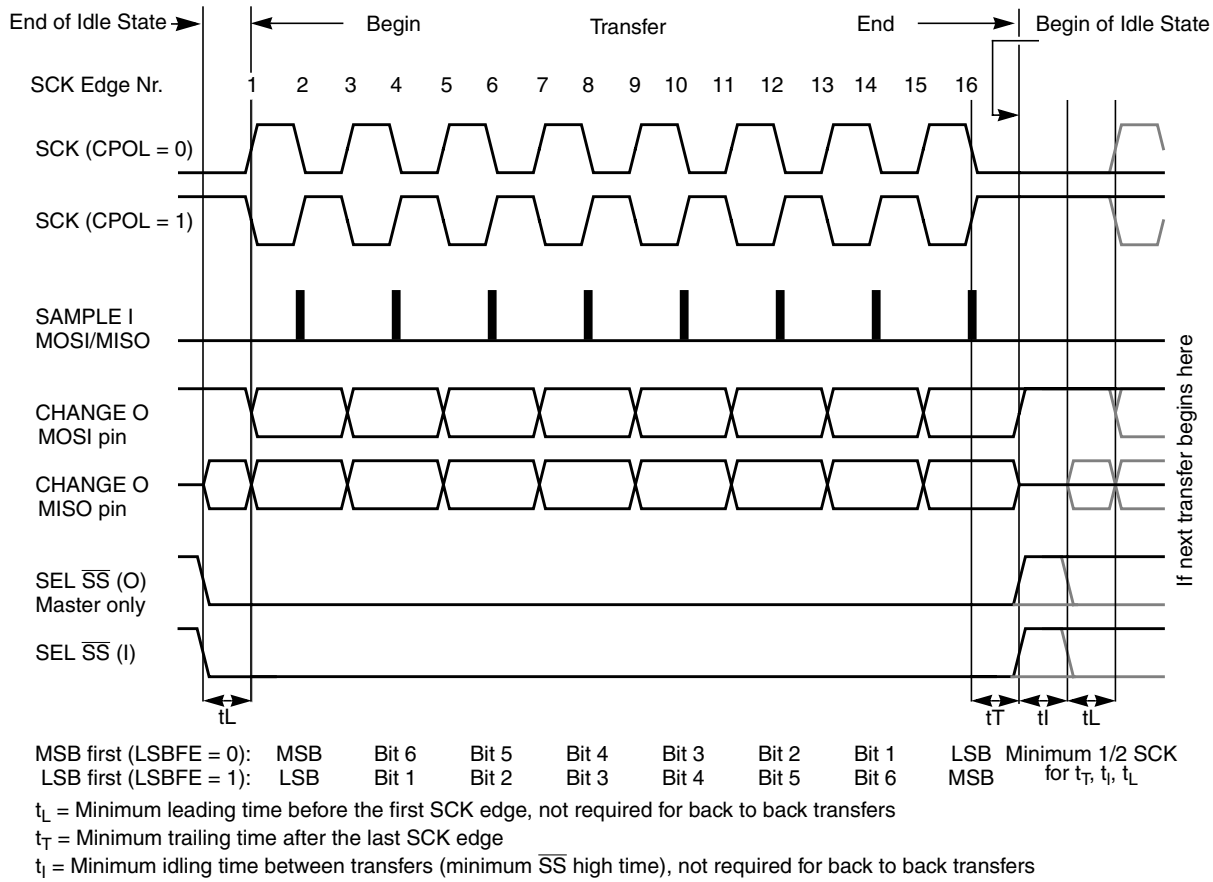


**Figure 14-10. SPI Clock Format 1 (CPHA = 1)**

## 14.4.4 SPI Baud Rate Generation

Baud rate generation consists of a series of divider stages. Six bits in the SPI Baud Rate register (SPPR2, SPPR1, SPPR0, SPR2, SPR1, and SPR0) determine the divisor to the SPI module clock which results in the SPI baud rate.

The SPI clock rate is determined by the product of the value in the baud rate preselection bits (SPPR2–SPPR0) and the value in the baud rate selection bits (SPR2–SPR0). The module clock divisor equation is shown in Figure 14-11

When all bits are clear (the default condition), the SPI module clock is divided by 2. When the selection bits (SPR2–SPR0) are 001 and the preselection bits (SPPR2–SPPR0) are 000, the module clock divisor becomes 4. When the selection bits are 010, the module clock divisor becomes 8 etc.

When the preselection bits are 001, the divisor determined by the selection bits is multiplied by 2. When the preselection bits are 010, the divisor is multiplied by 3, etc. See Table 14-7 for baud rate calculations for all bit conditions, based on a 25-MHz bus clock. The two sets of selects allows the clock to be divided by a non-power of two to achieve other baud rates such as divide by 6, divide by 10, etc.

The baud rate generator is activated only when the SPI is in the master mode and a serial transfer is taking place. In the other cases, the divider is disabled to decrease $I_{DD}$ current.

$$\text{BaudRateDivisor} = (\text{SPPR} + 1) \bullet 2^{(\text{SPR} + 1)}$$

**Figure 14-11. Baud Rate Divisor Equation**

## 14.4.5 Special Features

### 14.4.5.1 $\overline{\text{SS}}$ Output

The $\overline{\text{SS}}$ output feature automatically drives the $\overline{\text{SS}}$ pin low during transmission to select external devices and drives it high during idle to deselect external devices. When $\overline{\text{SS}}$ output is selected, the $\overline{\text{SS}}$ output pin is connected to the $\overline{\text{SS}}$ input pin of the external device.

The $\overline{\text{SS}}$ output is available only in master mode during normal SPI operation by asserting SSOE and MODFEN bit as shown in Table 14-3.

The mode fault feature is disabled while $\overline{\text{SS}}$ output is enabled.

**NOTE**

Care must be taken when using the $\overline{\text{SS}}$ output feature in a multimaster system because the mode fault feature is not available for detecting system errors between masters.

### 14.4.5.2 Bidirectional Mode (MOSI or MISO)

The bidirectional mode is selected when the SPC0 bit is set in SPI Control Register 2 (see Table 14-9). In this mode, the SPI uses only one serial data pin for the interface with external device(s). The MSTR bit decides which pin to use. The MOSI pin becomes the serial data I/O (MOMI) pin for the master mode, and the MISO pin becomes serial data I/O (SISO) pin for the slave mode. The MISO pin in master mode and MOSI pin in slave mode are not used by the SPI.

**Table 14-9. Normal Mode and Bidirectional Mode**

| When SPE = 1 | Master Mode MSTR = 1 | Slave Mode MSTR = 0 |
|---|---|---|
| **Normal Mode SPC0 = 0** | 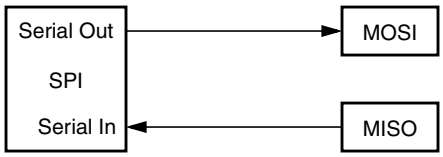 | 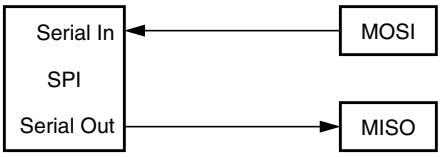 |
| **Bidirectional Mode SPC0 = 1** | 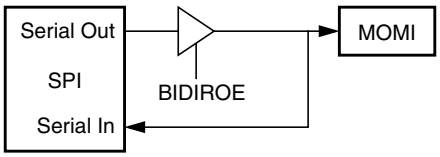 | 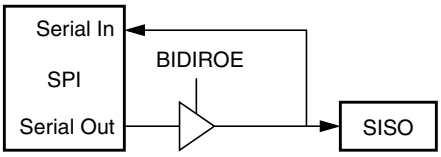 |

The direction of each serial I/O pin depends on the BIDIROE bit. If the pin is configured as an output, serial data from the shift register is driven out on the pin. The same pin is also the serial input to the shift register.

The SCK is output for the master mode and input for the slave mode.

The $\overline{SS}$ is the input or output for the master mode, and it is always the input for the slave mode.

The bidirectional mode does not affect SCK and $\overline{SS}$ functions.

**NOTE**

In bidirectional master mode, with mode fault enabled, both data pins MISO and MOSI can be occupied by the SPI, though MOSI is normally used for transmissions in bidirectional mode and MISO is not used by the SPI. If a mode fault occurs, the SPI is automatically switched to slave mode, in this case MISO becomes occupied by the SPI and MOSI is not used. This has to be considered, if the MISO pin is used for other purpose.

## 14.4.6 Error Conditions

The SPI has one error condition:

- Mode fault error

### 14.4.6.1 Mode Fault Error

If the $\overline{SS}$ input becomes low while the SPI is configured as a master, it indicates a system error where more than one master may be trying to drive the MOSI and SCK lines simultaneously. This condition is not permitted in normal operation, the MODF bit in the SPI Status Register is set automatically provided the MODFEN bit is set.

In the special case where the SPI is in master mode and MODFEN bit is cleared, the $\overline{SS}$ pin is not used by the SPI. In this special case, the mode fault error function is inhibited and MODF remains cleared. In case the SPI system is configured as a slave, the $\overline{SS}$ pin is a dedicated input pin. Mode fault error doesn't occur in slave mode.

If a mode fault error occurs the SPI is switched to slave mode, with the exception that the slave output buffer is disabled. So SCK, MISO and MOSI pins are forced to be high impedance inputs to avoid any possibility of conflict with another output driver. A transmission in progress is aborted and the SPI is forced into idle state.

If the mode fault error occurs in the bidirectional mode for a SPI system configured in master mode, output enable of the MOMI (MOSI in bidirectional mode) is cleared if it was set. No mode fault error occurs in the bidirectional mode for SPI system configured in slave mode.

The mode fault flag is cleared automatically by a read of the SPI Status Register (with MODF set) followed by a write to SPI Control Register 1. If the mode fault flag is cleared, the SPI becomes a normal master or slave again.

### 14.4.7 Operation in Run Mode

In run mode with the SPI system enable (SPE) bit in the SPI control register clear, the SPI system is in a low-power, disabled state. SPI registers remain accessible, but clocks to the core of this module are disabled.

### 14.4.8 Operation in Wait Mode

SPI operation in wait mode depends upon the state of the SPISWAI bit in SPI Control Register 2.

- If SPISWAI is clear, the SPI operates normally when the CPU is in wait mode
- If SPISWAI is set, SPI clock generation ceases and the SPI module enters a power conservation state when the CPU is in wait mode.
  - — If SPISWAI is set and the SPI is configured for master, any transmission and reception in progress stops at wait mode entry. The transmission and reception resumes when the SPI exits wait mode.
  - — If SPISWAI is set and the SPI is configured as a slave, any transmission and reception in progress continues if the SCK continues to be driven from the master. This keeps the slave synchronized to the master and the SCK.

    If the master transmits several bytes while the slave is in wait mode, the slave will continue to send out bytes consistent with the operation mode at the start of wait mode (i.e. If the slave is currently sending its SPIDR to the master, it will continue to send the same byte. Else if the slave is currently sending the last received byte from the master, it will continue to send each previous master byte).

**NOTE**

Care must be taken when expecting data from a master while the slave is in wait or stop mode. Even though the shift register will continue to operate, the rest of the SPI is shut down (i.e. a SPIF interrupt will **not** be generated until exiting stop or wait mode). Also, the byte from the shift register will not be copied into the SPIDR register until after the slave SPI has exited wait or stop mode. A SPIF flag and SPIDR copy is only generated if wait mode is entered or exited during a tranmission. If the slave enters wait mode in idle mode and exits wait mode in idle mode, neither a SPIF nor a SPIDR copy will occur.

### 14.4.9 Operation in Stop Mode

Stop mode is dependent on the system. The SPI enters stop mode when the module clock is disabled (held high or low). If the SPI is in master mode and exchanging data when the CPU enters stop mode, the transmission is frozen until the CPU exits stop mode. After stop, data to and from the external SPI is exchanged correctly. In slave mode, the SPI will stay synchronized with the master.

The stop mode is not dependent on the SPISWAI bit.

## 14.5 Reset

The reset values of registers and signals are described in the Memory Map and Registers section (see Section 14.3, “Memory Map and Register Definition”) which details the registers and their bit-fields.

- If a data transmission occurs in slave mode after reset without a write to SPIDR, it will transmit garbage, or the byte last received from the master before the reset.
- Reading from the SPIDR after reset will always read a byte of zeros.

## 14.6 Interrupts

The SPIV3 only originates interrupt requests when SPI is enabled (SPE bit in SPICR1 set). The following is a description of how the SPIV3 makes a request and how the MCU should acknowledge that request. The interrupt vector offset and interrupt priority are chip dependent.

The interrupt flags MODF, SPIF and SPTEF are logically ORed to generate an interrupt request.

### 14.6.1 MODF

MODF occurs when the master detects an error on the $\overline{SS}$ pin. The master SPI must be configured for the MODF feature (see Table 14-3). After MODF is set, the current transfer is aborted and the following bit is changed:

- MSTR = 0, The master bit in SPICR1 resets.

The MODF interrupt is reflected in the status register MODF flag. Clearing the flag will also clear the interrupt. This interrupt will stay active while the MODF flag is set. MODF has an automatic clearing process which is described in Section 14.3.2.4, “SPI Status Register (SPISR).”

### 14.6.2 SPIF

SPIF occurs when new data has been received and copied to the SPI Data Register. After SPIF is set, it does not clear until it is serviced. SPIF has an automatic clearing process which is described in Section 14.3.2.4, “SPI Status Register (SPISR).” In the event that the SPIF is not serviced before the end of the next transfer (i.e. SPIF remains active throughout another transfer), the latter transfers will be ignored and no new data will be copied into the SPIDR.

### 14.6.3 SPTEF

SPTEF occurs when the SPI Data Register is ready to accept new data. After SPTEF is set, it does not clear until it is serviced. SPTEF has an automatic clearing process which is described in Section 14.3.2.4, “SPI Status Register (SPISR).”

# Chapter 15
# Timer Module (TIM16B8CV1) Block Description

**Table 15-1. Revision History**

| Version Number | Revision Dates | Effective Date | Author | Description of Changes |
|---|---|---|---|---|
| 01.03 | 06 Feb 2006 | 06 Feb 2006 | S. Chinnam | Corrected the type at 0x006 and later in the document from TSCR2 and TSCR1 |
| 01.04 | 08 July 2008 | 08 July 2008 | S. Chinnam | Revised flag clearing procedure, whereby TEN bit must be set when clearing flags. |
| 01.05 | 05 May 2010 | 05 May 2010 | Ame Wang | -in 15.3.2.8/15-446,add Table 15-11<br>-in 15.3.2.11/15-450,TCRE bit description part,add Note<br>-in 15.4.3/15-459,add Figure 15-29 |

## 15.1 Introduction

The basic timer consists of a 16-bit, software-programmable counter driven by a seven-stage programmable prescaler.

This timer can be used for many purposes, including input waveform measurements while simultaneously generating an output waveform. Pulse widths can vary from microseconds to many seconds.

This timer contains 8 complete input capture/output compare channels and one pulse accumulator. The input capture function is used to detect a selected transition edge and record the time. The output compare function is used for generating output signals or for timer software delays. The 16-bit pulse accumulator is used to operate as a simple event counter or a gated time accumulator. The pulse accumulator shares timer channel 7 when in event mode.

A full access for the counter registers or the input capture/output compare registers should take place in one clock cycle. Accessing high byte and low byte separately for all of these registers may not yield the same result as accessing them in one word.

### 15.1.1 Features

The TIM16B8CV1 includes these distinctive features:

- Eight input capture/output compare channels.
- Clock prescaling.
- 16-bit counter.
- 16-bit pulse accumulator.

### 15.1.2 Modes of Operation

Stop: Timer is off because clocks are stopped.

Freeze: Timer counter keep on running, unless TSFRZ in TSCR (0x0006) is set to 1.

Wait: Counters keep on running, unless TSWAI in TSCR (0x0006) is set to 1.

Normal: Timer counter keep on running, unless TEN in TSCR (0x0006) is cleared to 0.

### 15.1.3 Block Diagrams

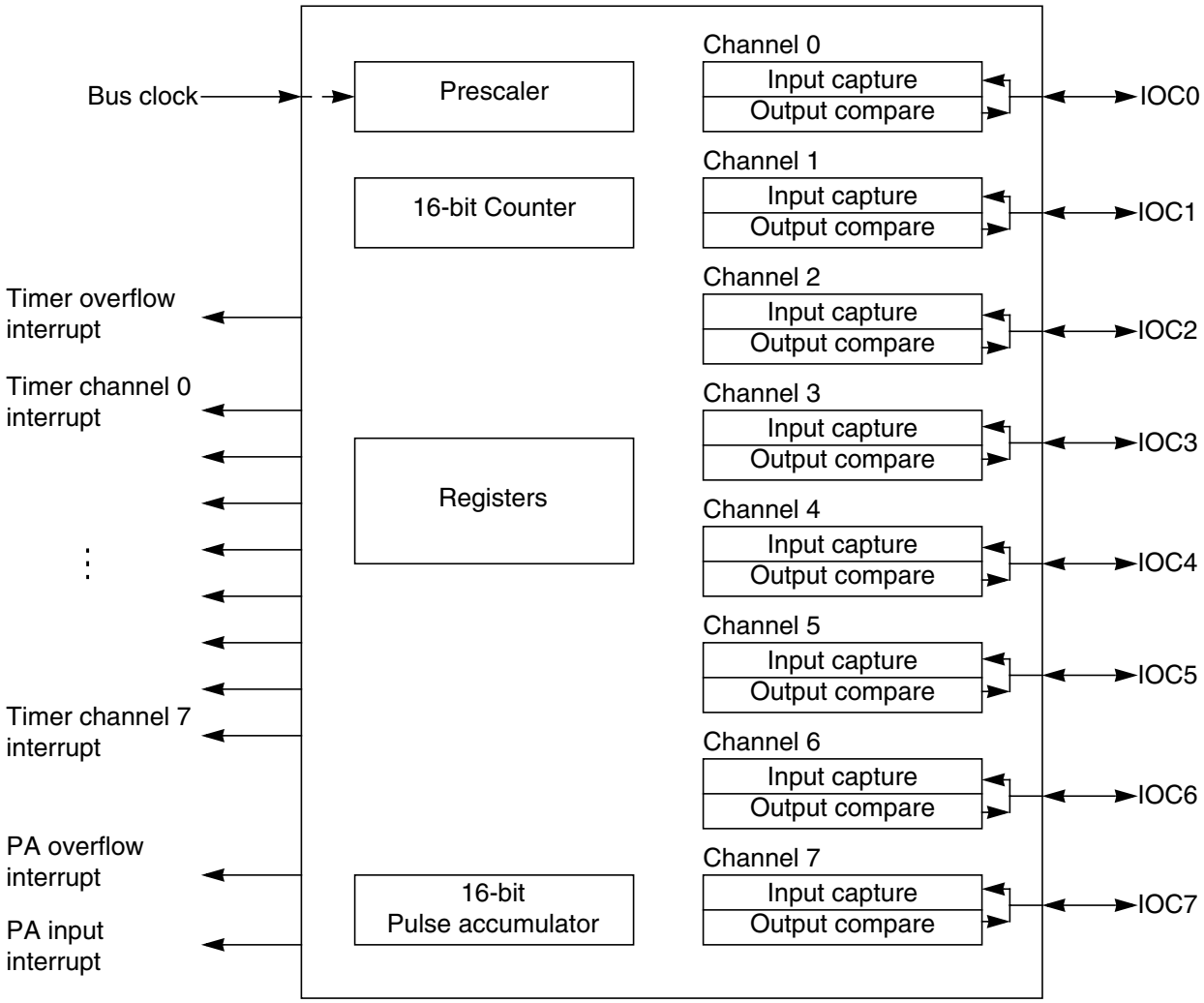


**Figure 15-1. TIM16B8CV1 Block Diagram**

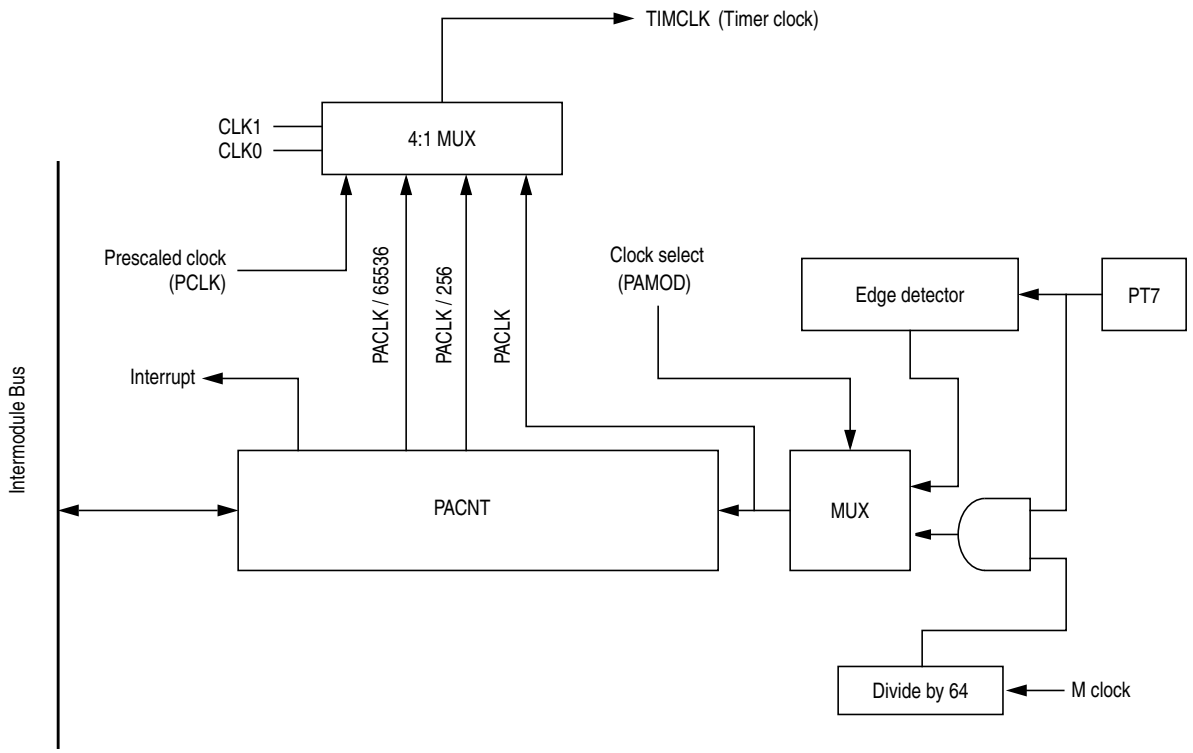


**Figure 15-2. 16-Bit Pulse Accumulator Block Diagram**

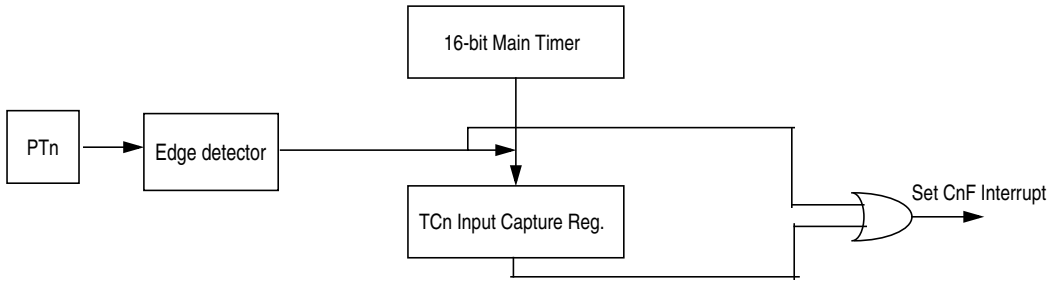


**Figure 15-3. Interrupt Flag Setting**

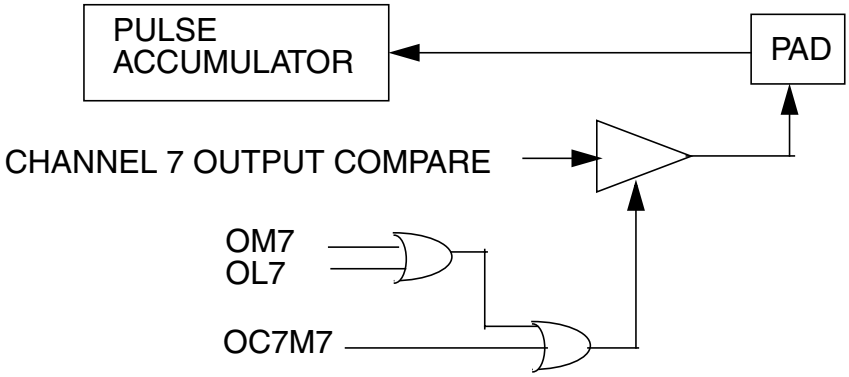


**Figure 15-4. Channel 7 Output Compare/Pulse Accumulator Logic**

**NOTE**

For more information see the respective functional descriptions in Section 15.4, "Functional Description," of this document.

## 15.2 External Signal Description

The TIM16B8CV1 module has a total of eight external pins.

### 15.2.1 IOC7 — Input Capture and Output Compare Channel 7 Pin

This pin serves as input capture or output compare for channel 7. This can also be configured as pulse accumulator input.

### 15.2.2 IOC6 — Input Capture and Output Compare Channel 6 Pin

This pin serves as input capture or output compare for channel 6.

### 15.2.3 IOC5 — Input Capture and Output Compare Channel 5 Pin

This pin serves as input capture or output compare for channel 5.

### 15.2.4 IOC4 — Input Capture and Output Compare Channel 4 Pin

This pin serves as input capture or output compare for channel 4. Pin

### 15.2.5 IOC3 — Input Capture and Output Compare Channel 3 Pin

This pin serves as input capture or output compare for channel 3.

### 15.2.6 IOC2 — Input Capture and Output Compare Channel 2 Pin

This pin serves as input capture or output compare for channel 2.

### 15.2.7 IOC1 — Input Capture and Output Compare Channel 1 Pin

This pin serves as input capture or output compare for channel 1.

### 15.2.8 IOC0 — Input Capture and Output Compare Channel 0 Pin

This pin serves as input capture or output compare for channel 0.

**NOTE**

For the description of interrupts see Section 15.6, “Interrupts”.

## 15.3 Memory Map and Register Definition

This section provides a detailed description of all memory and registers.

### 15.3.1 Module Memory Map

The memory map for the TIM16B8CV1 module is given below in Table 15-2. The address listed for each register is the address offset. The total address for each register is the sum of the base address for the TIM16B8CV1 module and the address offset for each register.

**Table 15-2. TIM16B8CV1 Memory Map**

| Address Offset | Use | Access |
|---|---|---|
| 0x0000 | Timer Input Capture/Output Compare Select (TIOS) | R/W |
| 0x0001 | Timer Compare Force Register (CFORC) | R/W[1] |
| 0x0002 | Output Compare 7 Mask Register (OC7M) | R/W |
| 0x0003 | Output Compare 7 Data Register (OC7D) | R/W |
| 0x0004 | Timer Count Register (TCNT(hi)) | R/W[2] |
| 0x0005 | Timer Count Register (TCNT(lo)) | R/W[2] |
| 0x0006 | Timer System Control Register1 (TSCR1) | R/W |
| 0x0007 | Timer Toggle Overflow Register (TTOV) | R/W |
| 0x0008 | Timer Control Register1 (TCTL1) | R/W |
| 0x0009 | Timer Control Register2 (TCTL2) | R/W |
| 0x000A | Timer Control Register3 (TCTL3) | R/W |
| 0x000B | Timer Control Register4 (TCTL4) | R/W |
| 0x000C | Timer Interrupt Enable Register (TIE) | R/W |
| 0x000D | Timer System Control Register2 (TSCR2) | R/W |
| 0x000E | Main Timer Interrupt Flag1 (TFLG1) | R/W |
| 0x000F | Main Timer Interrupt Flag2 (TFLG2) | R/W |
| 0x0010 | Timer Input Capture/Output Compare Register 0 (TC0(hi)) | R/W[3] |
| 0x0011 | Timer Input Capture/Output Compare Register 0 (TC0(lo)) | R/W[3] |
| 0x0012 | Timer Input Capture/Output Compare Register 1 (TC1(hi)) | R/W[3] |
| 0x0013 | Timer Input Capture/Output Compare Register 1 (TC1(lo)) | R/W[3] |
| 0x0014 | Timer Input Capture/Output Compare Register 2 (TC2(hi)) | R/W[3] |
| 0x0015 | Timer Input Capture/Output Compare Register 2 (TC2(lo)) | R/W[3] |
| 0x0016 | Timer Input Capture/Output Compare Register 3 (TC3(hi)) | R/W[3] |
| 0x0017 | Timer Input Capture/Output Compare Register 3 (TC3(lo)) | R/W[3] |
| 0x0018 | Timer Input Capture/Output Compare Register4 (TC4(hi)) | R/W[3] |
| 0x0019 | Timer Input Capture/Output Compare Register 4 (TC4(lo)) | R/W[3] |
| 0x001A | Timer Input Capture/Output Compare Register 5 (TC5(hi)) | R/W[3] |
| 0x001B | Timer Input Capture/Output Compare Register 5 (TC5(lo)) | R/W[3] |
| 0x001C | Timer Input Capture/Output Compare Register 6 (TC6(hi)) | R/W[3] |
| 0x001D | Timer Input Capture/Output Compare Register 6 (TC6(lo)) | R/W[3] |
| 0x001E | Timer Input Capture/Output Compare Register 7 (TC7(hi)) | R/W[3] |
| 0x001F | Timer Input Capture/Output Compare Register 7 (TC7(lo)) | R/W[3] |
| 0x0020 | 16-Bit Pulse Accumulator Control Register (PACTL) | R/W |
| 0x0021 | Pulse Accumulator Flag Register (PAFLG) | R/W |
| 0x0022 | Pulse Accumulator Count Register (PACNT(hi)) | R/W |
| 0x0023 | Pulse Accumulator Count Register (PACNT(lo)) | R/W |
| 0x0024 – 0x002C | Reserved | — [4] |
| 0x002D | Timer Test Register (TIMTST) | R/W[2] |
| 0x002E – 0x002F | Reserved | — [4] |

1. Always read 0x0000.
2. Only writable in special modes (test_mode = 1).
3. Write to these registers have no meaning or effect during input capture.
4. Write has no effect; return 0 on read

## 15.3.2 Register Descriptions

This section consists of register descriptions in address order. Each description includes a standard register diagram with an associated figure number. Details of register bit and field function follow the register diagrams, in bit order.

| Register Name | | Bit 7 | 6 | 5 | 4 | 3 | 2 | 1 | Bit 0 |
|---|---|---|---|---|---|---|---|---|---|
| 0x0000 TIOS | R/W | IOS7 | IOS6 | IOS5 | IOS4 | IOS3 | IOS2 | IOS1 | IOS0 |
| 0x0001 CFORC | R | 0 | 0 | 0 | 0 | 0 | 0 | 0 | 0 |
| | W | FOC7 | FOC6 | FOC5 | FOC4 | FOC3 | FOC2 | FOC1 | FOC0 |
| 0x0002 OC7M | R/W | OC7M7 | OC7M6 | OC7M5 | OC7M4 | OC7M3 | OC7M2 | OC7M1 | OC7M0 |
| 0x0003 OC7D | R/W | OC7D7 | OC7D6 | OC7D5 | OC7D4 | OC7D3 | OC7D2 | OC7D1 | OC7D0 |
| 0x0004 TCNTH | R/W | TCNT15 | TCNT14 | TCNT13 | TCNT12 | TCNT11 | TCNT10 | TCNT9 | TCNT8 |
| 0x0005 TCNTL | R/W | TCNT7 | TCNT6 | TCNT5 | TCNT4 | TCNT3 | TCNT2 | TCNT1 | TCNT0 |
| 0x0006 TSCR1 | R | TEN | TSWAI | TSFRZ | TFFCA | 0 | 0 | 0 | 0 |
| | W | | | | | | | | |
| 0x0007 TTOV | R/W | TOV7 | TOV6 | TOV5 | TOV4 | TOV3 | TOV2 | TOV1 | TOV0 |
| 0x0008 TCTL1 | R/W | OM7 | OL7 | OM6 | OL6 | OM5 | OL5 | OM4 | OL4 |
| 0x0009 TCTL2 | R/W | OM3 | OL3 | OM2 | OL2 | OM1 | OL1 | OM0 | OL0 |
| 0x000A TCTL3 | R/W | EDG7B | EDG7A | EDG6B | EDG6A | EDG5B | EDG5A | EDG4B | EDG4A |
| 0x000B TCTL4 | R/W | EDG3B | EDG3A | EDG2B | EDG2A | EDG1B | EDG1A | EDG0B | EDG0A |
| 0x000C TIE | R/W | C7I | C6I | C5I | C4I | C3I | C2I | C1I | C0I |

= Unimplemented or Reserved

**Figure 15-5. TIM16B8CV1 Register Summary**

| Register Name | | Bit 7 | 6 | 5 | 4 | 3 | 2 | 1 | Bit 0 |
|---|---|---|---|---|---|---|---|---|---|
| 0x000D TSCR2 | R | TOI | 0 | 0 | 0 | TCRE | PR2 | PR1 | PR0 |
| | W | | | | | | | | |
| 0x000E TFLG1 | R | C7F | C6F | C5F | C4F | C3F | C2F | C1F | C0F |
| | W | | | | | | | | |
| 0x000F TFLG2 | R | TOF | 0 | 0 | 0 | 0 | 0 | 0 | 0 |
| | W | | | | | | | | |
| 0x0010–0x001F TCxH–TCxL | R | Bit 15 | Bit 14 | Bit 13 | Bit 12 | Bit 11 | Bit 10 | Bit 9 | Bit 8 |
| | W | | | | | | | | |
| | R | Bit 7 | Bit 6 | Bit 5 | Bit 4 | Bit 3 | Bit 2 | Bit 1 | Bit 0 |
| | W | | | | | | | | |
| 0x0020 PACTL | R | 0 | PAEN | PAMOD | PEDGE | CLK1 | CLK0 | PAOVI | PAI |
| | W | | | | | | | | |
| 0x0021 PAFLG | R | 0 | 0 | 0 | 0 | 0 | 0 | PAOVF | PAIF |
| | W | | | | | | | | |
| 0x0022 PACNTH | R | PACNT15 | PACNT14 | PACNT13 | PACNT12 | PACNT11 | PACNT10 | PACNT9 | PACNT8 |
| | W | | | | | | | | |
| 0x0023 PACNTL | R | PACNT7 | PACNT6 | PACNT5 | PACNT4 | PACNT3 | PACNT2 | PACNT1 | PACNT0 |
| | W | | | | | | | | |
| 0x0024–0x002F Reserved | R | | | | | | | | |
| | W | | | | | | | | |

= Unimplemented or Reserved

**Figure 15-5. TIM16B8CV1 Register Summary (continued)**

### 15.3.2.1 Timer Input Capture/Output Compare Select (TIOS)

Module Base + 0x0000

| | 7 | 6 | 5 | 4 | 3 | 2 | 1 | 0 |
|---|---|---|---|---|---|---|---|---|
| R/W | IOS7 | IOS6 | IOS5 | IOS4 | IOS3 | IOS2 | IOS1 | IOS0 |
| Reset | 0 | 0 | 0 | 0 | 0 | 0 | 0 | 0 |

**Figure 15-6. Timer Input Capture/Output Compare Select (TIOS)**

Read: Anytime

Write: Anytime

**Table 15-3. TIOS Field Descriptions**

| Field | Description |
|---|---|
| 7:0<br>IOS[7:0] | **Input Capture or Output Compare Channel Configuration**<br>0 The corresponding channel acts as an input capture.<br>1 The corresponding channel acts as an output compare. |

### 15.3.2.2 Timer Compare Force Register (CFORC)

Module Base + 0x0001

| | 7 | 6 | 5 | 4 | 3 | 2 | 1 | 0 |
|---|---|---|---|---|---|---|---|---|
| R | 0 | 0 | 0 | 0 | 0 | 0 | 0 | 0 |
| W | FOC7 | FOC6 | FOC5 | FOC4 | FOC3 | FOC2 | FOC1 | FOC0 |
| Reset | 0 | 0 | 0 | 0 | 0 | 0 | 0 | 0 |

**Figure 15-7. Timer Compare Force Register (CFORC)**

Read: Anytime but will always return 0x0000 (1 state is transient)

Write: Anytime

**Table 15-4. CFORC Field Descriptions**

| Field | Description |
|---|---|
| 7:0<br>FOC[7:0] | **Force Output Compare Action for Channel 7:0** — A write to this register with the corresponding data bit(s) set causes the action which is programmed for output compare “x” to occur immediately. The action taken is the same as if a successful comparison had just taken place with the TCx register except the interrupt flag does not get set.<br>**Note:** A successful channel 7 output compare overrides any channel 6:0 compares. If forced output compare on any channel occurs at the same time as the successful output compare then forced output compare action will take precedence and interrupt flag won’t get set. |

### 15.3.2.3 Output Compare 7 Mask Register (OC7M)

Module Base + 0x0002

| | 7 | 6 | 5 | 4 | 3 | 2 | 1 | 0 |
|---|---|---|---|---|---|---|---|---|
| R<br>W | OC7M7 | OC7M6 | OC7M5 | OC7M4 | OC7M3 | OC7M2 | OC7M1 | OC7M0 |
| Reset | 0 | 0 | 0 | 0 | 0 | 0 | 0 | 0 |

**Figure 15-8. Output Compare 7 Mask Register (OC7M)**

Read: Anytime

Write: Anytime

**Table 15-5. OC7M Field Descriptions**

| Field | Description |
|---|---|
| 7:0<br>OC7M[7:0] | **Output Compare 7 Mask** — Setting the OC7Mx (x ranges from 0 to 6) will set the corresponding port to be an output port when the corresponding TIOSx (x ranges from 0 to 6) bit is set to be an output compare.<br>**Note:** A successful channel 7 output compare overrides any channel 6:0 compares. For each OC7M bit that is set, the output compare action reflects the corresponding OC7D bit. |

### 15.3.2.4 Output Compare 7 Data Register (OC7D)

Module Base + 0x0003

| | 7 | 6 | 5 | 4 | 3 | 2 | 1 | 0 |
|---|---|---|---|---|---|---|---|---|
| R<br>W | OC7D7 | OC7D6 | OC7D5 | OC7D4 | OC7D3 | OC7D2 | OC7D1 | OC7D0 |
| Reset | 0 | 0 | 0 | 0 | 0 | 0 | 0 | 0 |

**Figure 15-9. Output Compare 7 Data Register (OC7D)**

Read: Anytime

Write: Anytime

**Table 15-6. OC7D Field Descriptions**

| Field | Description |
|---|---|
| 7:0<br>OC7D[7:0] | **Output Compare 7 Data** — A channel 7 output compare can cause bits in the output compare 7 data register to transfer to the timer port data register depending on the output compare 7 mask register. |

### 15.3.2.5 Timer Count Register (TCNT)

Module Base + 0x0004

| | 15 | 14 | 13 | 12 | 11 | 10 | 9 | 9 |
|---|---|---|---|---|---|---|---|---|
| R<br>W | TCNT15 | TCNT14 | TCNT13 | TCNT12 | TCNT11 | TCNT10 | TCNT9 | TCNT8 |
| Reset | 0 | 0 | 0 | 0 | 0 | 0 | 0 | 0 |

**Figure 15-10. Timer Count Register High (TCNTH)**

Module Base + 0x0005

| | 7 | 6 | 5 | 4 | 3 | 2 | 1 | 0 |
|---|---|---|---|---|---|---|---|---|
| R<br>W | TCNT7 | TCNT6 | TCNT5 | TCNT4 | TCNT3 | TCNT2 | TCNT1 | TCNT0 |
| Reset | 0 | 0 | 0 | 0 | 0 | 0 | 0 | 0 |

**Figure 15-11. Timer Count Register Low (TCNTL)**

The 16-bit main timer is an up counter.

A full access for the counter register should take place in one clock cycle. A separate read/write for high byte and low byte will give a different result than accessing them as a word.

Read: Anytime

Write: Has no meaning or effect in the normal mode; only writable in special modes (test_mode = 1).

The period of the first count after a write to the TCNT registers may be a different size because the write is not synchronized with the prescaler clock.

### 15.3.2.6 Timer System Control Register 1 (TSCR1)

Module Base + 0x0006

| | 7 | 6 | 5 | 4 | 3 | 2 | 1 | 0 |
|---|---|---|---|---|---|---|---|---|
| R | TEN | TSWAI | TSFRZ | TFFCA | 0 | 0 | 0 | 0 |
| W | | | | | | | | |
| Reset | 0 | 0 | 0 | 0 | 0 | 0 | 0 | 0 |

= Unimplemented or Reserved

**Figure 15-12. Timer System Control Register 1 (TSCR1)**

Read: Anytime

Write: Anytime

**Table 15-7. TSCR1 Field Descriptions**

| Field | Description |
|---|---|
| 7<br>TEN | **Timer Enable**<br>0 Disables the main timer, including the counter. Can be used for reducing power consumption.<br>1 Allows the timer to function normally.<br>If for any reason the timer is not active, there is no ÷64 clock for the pulse accumulator because the ÷64 is generated by the timer prescaler. |
| 6<br>TSWAI | **Timer Module Stops While in Wait**<br>0 Allows the timer module to continue running during wait.<br>1 Disables the timer module when the MCU is in the wait mode. Timer interrupts cannot be used to get the MCU out of wait.<br>TSWAI also affects pulse accumulator. |

**Table 15-7. TSCR1 Field Descriptions (continued)**

| Field | Description |
|---|---|
| 5<br>TSFRZ | **Timer Stops While in Freeze Mode**<br>0 Allows the timer counter to continue running while in freeze mode.<br>1 Disables the timer counter whenever the MCU is in freeze mode. This is useful for emulation.<br>TSFRZ does not stop the pulse accumulator. |
| 4<br>TFFCA | **Timer Fast Flag Clear All**<br>0 Allows the timer flag clearing to function normally.<br>1 For TFLG1(0x000E), a read from an input capture or a write to the output compare channel (0x0010–0x001F) causes the corresponding channel flag, CnF, to be cleared. For TFLG2 (0x000F), any access to the TCNT register (0x0004, 0x0005) clears the TOF flag. Any access to the PACNT registers (0x0022, 0x0023) clears the PAOVF and PAIF flags in the PAFLG register (0x0021). This has the advantage of eliminating software overhead in a separate clear sequence. Extra care is required to avoid accidental flag clearing due to unintended accesses. |

### 15.3.2.7 Timer Toggle On Overflow Register 1 (TTOV)

Module Base + 0x0007

| | 7 | 6 | 5 | 4 | 3 | 2 | 1 | 0 |
|---|---|---|---|---|---|---|---|---|
| R<br>W | TOV7 | TOV6 | TOV5 | TOV4 | TOV3 | TOV2 | TOV1 | TOV0 |
| Reset | 0 | 0 | 0 | 0 | 0 | 0 | 0 | 0 |

**Figure 15-13. Timer Toggle On Overflow Register 1 (TTOV)**

Read: Anytime

Write: Anytime

**Table 15-8. TTOV Field Descriptions**

| Field | Description |
|---|---|
| 7:0<br>TOV[7:0] | **Toggle On Overflow Bits** — TOVx toggles output compare pin on overflow. This feature only takes effect when in output compare mode. When set, it takes precedence over forced output compare but not channel 7 override events.<br>0 Toggle output compare pin on overflow feature disabled.<br>1 Toggle output compare pin on overflow feature enabled. |

### 15.3.2.8 Timer Control Register 1/Timer Control Register 2 (TCTL1/TCTL2)

Module Base + 0x0008

| | 7 | 6 | 5 | 4 | 3 | 2 | 1 | 0 |
|---|---|---|---|---|---|---|---|---|
| R<br>W | OM7 | OL7 | OM6 | OL6 | OM5 | OL5 | OM4 | OL4 |
| Reset | 0 | 0 | 0 | 0 | 0 | 0 | 0 | 0 |

**Figure 15-14. Timer Control Register 1 (TCTL1)**

Module Base + 0x0009

| | 7 | 6 | 5 | 4 | 3 | 2 | 1 | 0 |
|---|---|---|---|---|---|---|---|---|
| R<br>W | OM3 | OL3 | OM2 | OL2 | OM1 | OL1 | OM0 | OL0 |
| Reset | 0 | 0 | 0 | 0 | 0 | 0 | 0 | 0 |

**Figure 15-15. Timer Control Register 2 (TCTL2)**

Read: Anytime

Write: Anytime

**Table 15-9. TCTL1/TCTL2 Field Descriptions**

| Field | Description |
|---|---|
| 7:0<br>OMx | **Output Mode** — These eight pairs of control bits are encoded to specify the output action to be taken as a result of a successful OCx compare. When either OMx or OLx is 1, the pin associated with OCx becomes an output tied to OCx.<br>**Note:** To enable output action by OMx bits on timer port, the corresponding bit in OC7M should be cleared. |
| 7:0<br>OLx | **Output Level** — These eight pairs of control bits are encoded to specify the output action to be taken as a result of a successful OCx compare. When either OMx or OLx is 1, the pin associated with OCx becomes an output tied to OCx.<br>**Note:** To enable output action by OLx bits on timer port, the corresponding bit in OC7M should be cleared. |

**Table 15-10. Compare Result Output Action**

| OMx | OLx | Action |
|---|---|---|
| 0 | 0 | Timer disconnected from output pin logic |
| 0 | 1 | Toggle OCx output line |
| 1 | 0 | Clear OCx output line to zero |
| 1 | 1 | Set OCx output line to one |

To operate the 16-bit pulse accumulator independently of input capture or output compare 7 and 0 respectively the user must set the corresponding bits IOSx = 1, OMx = 0 and OLx = 0. OC7M7 in the OC7M register must also be cleared.

To enable output action using the OM7 and OL7 bits on the timer port,the corresponding bit OC7M7 in the OC7M register must also be cleared. The settings for these bits can be seen in Table 15-11

**Table 15-11. The OC7 and OCx event priority**

| OC7M7=0 | | | | OC7M7=1 | | | |
|---|---|---|---|---|---|---|---|
| OC7Mx=1 | | OC7Mx=0 | | OC7Mx=1 | | OC7Mx=0 | |
| TC7=TCx | TC7>TCx | TC7=TCx | TC7>TCx | TC7=TCx | TC7>TCx | TC7=TCx | TC7>TCx |
| IOCx=OC7Dx<br>IOC7=OM7/OL7 | IOCx=OC7Dx<br>+OMx/OLx<br>IOC7=OM7/OL7 | IOCx=OMx/OLx<br>IOC7=OM7/OL7 | | IOCx=OC7Dx<br>IOC7=OC7D7 | IOCx=OC7Dx<br>+OMx/OLx<br>IOC7=OC7D7 | IOCx=OMx/OLx<br>IOC7=OC7D7 | |

Note: in Table 15-11, the IOS7 and IOSx should be set to 1

IOSx is the register TIOS bit x,

OC7Mx is the register OC7M bit x,

TCx is timer Input Capture/Output Compare register,

IOCx is channel x,

OMx/OLx is the register TCTL1/TCTL2,

OC7Dx is the register OC7D bit x.

IOCx = OC7Dx+ OMx/OLx, means that both OC7 event and OCx event will change channel x value.

### 15.3.2.9 Timer Control Register 3/Timer Control Register 4 (TCTL3 and TCTL4)

Module Base + 0x000A

| | 7 | 6 | 5 | 4 | 3 | 2 | 1 | 0 |
|---|---|---|---|---|---|---|---|---|
| R<br>W | EDG7B | EDG7A | EDG6B | EDG6A | EDG5B | EDG5A | EDG4B | EDG4A |
| Reset | 0 | 0 | 0 | 0 | 0 | 0 | 0 | 0 |

**Figure 15-16. Timer Control Register 3 (TCTL3)**

Module Base + 0x000B

| | 7 | 6 | 5 | 4 | 3 | 2 | 1 | 0 |
|---|---|---|---|---|---|---|---|---|
| R<br>W | EDG3B | EDG3A | EDG2B | EDG2A | EDG1B | EDG1A | EDG0B | EDG0A |
| Reset | 0 | 0 | 0 | 0 | 0 | 0 | 0 | 0 |

**Figure 15-17. Timer Control Register 4 (TCTL4)**

Read: Anytime

Write: Anytime.

**Table 15-12. TCTL3/TCTL4 Field Descriptions**

| Field | Description |
|---|---|
| 7:0<br>EDGnB<br>EDGnA | **Input Capture Edge Control** — These eight pairs of control bits configure the input capture edge detector circuits. |

**Table 15-13. Edge Detector Circuit Configuration**

| EDGnB | EDGnA | Configuration |
|---|---|---|
| 0 | 0 | Capture disabled |
| 0 | 1 | Capture on rising edges only |
| 1 | 0 | Capture on falling edges only |
| 1 | 1 | Capture on any edge (rising or falling) |

### 15.3.2.10 Timer Interrupt Enable Register (TIE)

Module Base + 0x000C

| | 7 | 6 | 5 | 4 | 3 | 2 | 1 | 0 |
|---|---|---|---|---|---|---|---|---|
| R<br>W | C7I | C6I | C5I | C4I | C3I | C2I | C1I | C0I |
| Reset | 0 | 0 | 0 | 0 | 0 | 0 | 0 | 0 |

**Figure 15-18. Timer Interrupt Enable Register (TIE)**

Read: Anytime

Write: Anytime.

**Table 15-14. TIE Field Descriptions**

| Field | Description |
|---|---|
| 7:0<br>C7I:C0I | **Input Capture/Output Compare "x" Interrupt Enable —** The bits in TIE correspond bit-for-bit with the bits in the TFLG1 status register. If cleared, the corresponding flag is disabled from causing a hardware interrupt. If set, the corresponding flag is enabled to cause a interrupt. |

### 15.3.2.11 Timer System Control Register 2 (TSCR2)

Module Base + 0x000D

| | 7 | 6 | 5 | 4 | 3 | 2 | 1 | 0 |
|---|---|---|---|---|---|---|---|---|
| R<br>W | TOI | 0 | 0 | 0 | TCRE | PR2 | PR1 | PR0 |
| Reset | 0 | 0 | 0 | 0 | 0 | 0 | 0 | 0 |

= Unimplemented or Reserved

**Figure 15-19. Timer System Control Register 2 (TSCR2)**

Read: Anytime

Write: Anytime.

**Table 15-15. TSCR2 Field Descriptions**

| Field | Description |
|---|---|
| 7<br>TOI | **Timer Overflow Interrupt Enable**<br>0 Interrupt inhibited.<br>1 Hardware interrupt requested when TOF flag set. |
| 3<br>TCRE | **Timer Counter Reset Enable** — This bit allows the timer counter to be reset by a successful output compare 7 event. This mode of operation is similar to an up-counting modulus counter.<br>0 Counter reset inhibited and counter free runs.<br>1 Counter reset by a successful output compare 7.<br>**Note:** If TC7 = 0x0000 and TCRE = 1, TCNT will stay at 0x0000 continuously. If TC7 = 0xFFFF and TCRE = 1, TOF will never be set when TCNT is reset from 0xFFFF to 0x0000.<br>**Note:** TCRE=1 and TC7!=0, the TCNT cycle period will be TC7 x "prescaler counter width" + "1 Bus Clock", for a more detail explanation please refer to Section 15.4.3, “Output Compare |
| 2<br>PR[2:0] | **Timer Prescaler Select** — These three bits select the frequency of the timer prescaler clock derived from the Bus Clock as shown in Table 15-16. |

**Table 15-16. Timer Clock Selection**

| PR2 | PR1 | PR0 | Timer Clock |
|---|---|---|---|
| 0 | 0 | 0 | Bus Clock / 1 |
| 0 | 0 | 1 | Bus Clock / 2 |
| 0 | 1 | 0 | Bus Clock / 4 |
| 0 | 1 | 1 | Bus Clock / 8 |
| 1 | 0 | 0 | Bus Clock / 16 |
| 1 | 0 | 1 | Bus Clock / 32 |
| 1 | 1 | 0 | Bus Clock / 64 |
| 1 | 1 | 1 | Bus Clock / 128 |

**NOTE**

The newly selected prescale factor will not take effect until the next synchronized edge where all prescale counter stages equal zero.

### 15.3.2.12 Main Timer Interrupt Flag 1 (TFLG1)

Module Base + 0x000E

| | 7 | 6 | 5 | 4 | 3 | 2 | 1 | 0 |
|---|---|---|---|---|---|---|---|---|
| R<br>W | C7F | C6F | C5F | C4F | C3F | C2F | C1F | C0F |
| Reset | 0 | 0 | 0 | 0 | 0 | 0 | 0 | 0 |

**Figure 15-20. Main Timer Interrupt Flag 1 (TFLG1)**

Read: Anytime

Write: Used in the clearing mechanism (set bits cause corresponding bits to be cleared). Writing a zero will not affect current status of the bit.

**Table 15-17. TRLG1 Field Descriptions**

| Field | Description |
|---|---|
| 7:0<br>C[7:0]F | **Input Capture/Output Compare Channel "x" Flag** — These flags are set when an input capture or output compare event occurs. Clearing requires writing a one to the corresponding flag bit when TEN is set to one.<br>When TFFCA bit in TSCR register is set, a read from an input capture or a write into an output compare channel (0x0010–0x001F) will cause the corresponding channel flag CxF to be cleared. |

### 15.3.2.13 Main Timer Interrupt Flag 2 (TFLG2)

Module Base + 0x000F

| | 7 | 6 | 5 | 4 | 3 | 2 | 1 | 0 |
|---|---|---|---|---|---|---|---|---|
| R | TOF | 0 | 0 | 0 | 0 | 0 | 0 | 0 |
| W | | | | | | | | |
| Reset | 0 | 0 | 0 | 0 | 0 | 0 | 0 | 0 |

Unimplemented or Reserved

**Figure 15-21. Main Timer Interrupt Flag 2 (TFLG2)**

TFLG2 indicates when interrupt conditions have occurred. To clear a bit in the flag register, write the bit to one while TEN of TSCR1 is set to one.

Read: Anytime

Write: Used in clearing mechanism (set bits cause corresponding bits to be cleared).

Any access to TCNT will clear TFLG2 register if the TFFCA bit in TSCR register is set.

**Table 15-18. TRLG2 Field Descriptions**

| Field | Description |
|---|---|
| 7<br>TOF | **Timer Overflow Flag** — Set when 16-bit free-running timer overflows from 0xFFFF to 0x0000. Clearing this bit requires writing a one to bit 7 of TFLG2 register while TEN bit of TSCR1 is set to one. (See also TCRE control bit explanation.) |

#### 15.3.2.14 Timer Input Capture/Output Compare Registers High and Low 0–7 (TCxH and TCxL)

Module Base + 0x0010 = TC0H
0x0012 = TC1H
0x0014 = TC2H
0x0016 = TC3H
0x0018 = TC4H
0x001A = TC5H
0x001C = TC6H
0x001E = TC7H

| | 15 | 14 | 13 | 12 | 11 | 10 | 9 | 0 |
|---|---|---|---|---|---|---|---|---|
| R/W | Bit 15 | Bit 14 | Bit 13 | Bit 12 | Bit 11 | Bit 10 | Bit 9 | Bit 8 |
| Reset | 0 | 0 | 0 | 0 | 0 | 0 | 0 | 0 |

**Figure 15-22. Timer Input Capture/Output Compare Register x High (TCxH)**

Module Base + 0x0011 = TC0L
0x0013 = TC1L
0x0015 = TC2L
0x0017 = TC3L
0x0019 = TC4L
0x001B = TC5L
0x001D = TC6L
0x001F = TC7L

| | 7 | 6 | 5 | 4 | 3 | 2 | 1 | 0 |
|---|---|---|---|---|---|---|---|---|
| R/W | Bit 7 | Bit 6 | Bit 5 | Bit 4 | Bit 3 | Bit 2 | Bit 1 | Bit 0 |
| Reset | 0 | 0 | 0 | 0 | 0 | 0 | 0 | 0 |

**Figure 15-23. Timer Input Capture/Output Compare Register x Low (TCxL)**

Depending on the TIOS bit for the corresponding channel, these registers are used to latch the value of the free-running counter when a defined transition is sensed by the corresponding input capture edge detector or to trigger an output action for output compare.

Read: Anytime

Write: Anytime for output compare function.Writes to these registers have no meaning or effect during input capture. All timer input capture/output compare registers are reset to 0x0000.

**NOTE**

Read/Write access in byte mode for high byte should takes place before low byte otherwise it will give a different result.

### 15.3.2.15 16-Bit Pulse Accumulator Control Register (PACTL)

Module Base + 0x0020

| | 7 | 6 | 5 | 4 | 3 | 2 | 1 | 0 |
|---|---|---|---|---|---|---|---|---|
| R | 0 | PAEN | PAMOD | PEDGE | CLK1 | CLK0 | PAOVI | PAI |
| W | | | | | | | | |
| Reset | 0 | 0 | 0 | 0 | 0 | 0 | 0 | 0 |

Unimplemented or Reserved

**Figure 15-24. 16-Bit Pulse Accumulator Control Register (PACTL)**

When PAEN is set, the PACT is enabled.The PACT shares the input pin with IOC7.

Read: Any time

Write: Any time

**Table 15-19. PACTL Field Descriptions**

| Field | Description |
|---|---|
| 6<br>PAEN | **Pulse Accumulator System Enable** — PAEN is independent from TEN. With timer disabled, the pulse accumulator can function unless pulse accumulator is disabled.<br>0 16-Bit Pulse Accumulator system disabled.<br>1 Pulse Accumulator system enabled. |
| 5<br>PAMOD | **Pulse Accumulator Mode** — This bit is active only when the Pulse Accumulator is enabled (PAEN = 1). See Table 15-20.<br>0 Event counter mode.<br>1 Gated time accumulation mode. |
| 4<br>PEDGE | **Pulse Accumulator Edge Control** — This bit is active only when the Pulse Accumulator is enabled (PAEN = 1). For PAMOD bit = 0 (event counter mode). See Table 15-20.<br>0 Falling edges on IOC7 pin cause the count to be incremented.<br>1 Rising edges on IOC7 pin cause the count to be incremented.<br>For PAMOD bit = 1 (gated time accumulation mode).<br>0 IOC7 input pin high enables M (bus clock) divided by 64 clock to Pulse Accumulator and the trailing falling edge on IOC7 sets the PAIF flag.<br>1 IOC7 input pin low enables M (bus clock) divided by 64 clock to Pulse Accumulator and the trailing rising edge on IOC7 sets the PAIF flag. |
| 3:2<br>CLK[1:0] | **Clock Select Bits —** Refer to Table 15-21. |
| 1<br>PAOVI | **Pulse Accumulator Overflow Interrupt Enable**<br>0 Interrupt inhibited.<br>1 Interrupt requested if PAOVF is set. |
| 0<br>PAI | **Pulse Accumulator Input Interrupt Enable**<br>0 Interrupt inhibited.<br>1 Interrupt requested if PAIF is set. |

**Table 15-20. Pin Action**

| PAMOD | PEDGE | Pin Action |
|---|---|---|
| 0 | 0 | Falling edge |
| 0 | 1 | Rising edge |
| 1 | 0 | Div. by 64 clock enabled with pin high level |
| 1 | 1 | Div. by 64 clock enabled with pin low level |

**NOTE**

If the timer is not active (TEN = 0 in TSCR), there is no divide-by-64 because the ÷64 clock is generated by the timer prescaler.

**Table 15-21. Timer Clock Selection**

| CLK1 | CLK0 | Timer Clock |
|---|---|---|
| 0 | 0 | Use timer prescaler clock as timer counter clock |
| 0 | 1 | Use PACLK as input to timer counter clock |
| 1 | 0 | Use PACLK/256 as timer counter clock frequency |
| 1 | 1 | Use PACLK/65536 as timer counter clock frequency |

For the description of PACLK please refer Figure 15-24.

If the pulse accumulator is disabled (PAEN = 0), the prescaler clock from the timer is always used as an input clock to the timer counter. The change from one selected clock to the other happens immediately after these bits are written.

### 15.3.2.16 Pulse Accumulator Flag Register (PAFLG)

Module Base + 0x0021

| | 7 | 6 | 5 | 4 | 3 | 2 | 1 | 0 |
|---|---|---|---|---|---|---|---|---|
| R | 0 | 0 | 0 | 0 | 0 | 0 | PAOVF | PAIF |
| W | | | | | | | | |
| Reset | 0 | 0 | 0 | 0 | 0 | 0 | 0 | 0 |

Unimplemented or Reserved

**Figure 15-25. Pulse Accumulator Flag Register (PAFLG)**

Read: Anytime

Write: Anytime

When the TFFCA bit in the TSCR register is set, any access to the PACNT register will clear all the flags in the PAFLG register. Timer module must stay enabled (TEN =1) while clearing thse bits.

**Table 15-22. PAFLG Field Descriptions**

| Field | Description |
|---|---|
| 1<br>PAOVF | **Pulse Accumulator Overflow Flag** — Set when the 16-bit pulse accumulator overflows from 0xFFFF to 0x0000.<br>Clearing this bit requires wirting a one to this bit in the PAFLG register while TEN bit of TSCR1 register is set to one. |
| 0<br>PAIF | **Pulse Accumulator Input edge Flag** — Set when the selected edge is detected at the IOC7 input pin.In event mode the event edge triggers PAIF and in gated time accumulation mode the trailing edge of the gate signal at the IOC7 input pin triggers PAIF.<br>Clearing this bit requires writing a one to this bit in the PAFLG register while TEN bit of TSCR1 register is set to one. Any access to the PACNT register will clear all the flags in this register when TFFCA bit in register TSCR(0x0006) is set. |

### 15.3.2.17 Pulse Accumulators Count Registers (PACNT)

Module Base + 0x0022

| | 15 | 14 | 13 | 12 | 11 | 10 | 9 | 0 |
|---|---|---|---|---|---|---|---|---|
| R<br>W | PACNT15 | PACNT14 | PACNT13 | PACNT12 | PACNT11 | PACNT10 | PACNT9 | PACNT8 |
| Reset | 0 | 0 | 0 | 0 | 0 | 0 | 0 | 0 |

**Figure 15-26. Pulse Accumulator Count Register High (PACNTH)**

Module Base + 0x0023

| | 7 | 6 | 5 | 4 | 3 | 2 | 1 | 0 |
|---|---|---|---|---|---|---|---|---|
| R<br>W | PACNT7 | PACNT6 | PACNT5 | PACNT4 | PACNT3 | PACNT2 | PACNT1 | PACNT0 |
| Reset | 0 | 0 | 0 | 0 | 0 | 0 | 0 | 0 |

**Figure 15-27. Pulse Accumulator Count Register Low (PACNTL)**

Read: Anytime

Write: Anytime

These registers contain the number of active input edges on its input pin since the last reset.

When PACNT overflows from 0xFFFF to 0x0000, the Interrupt flag PAOVF in PAFLG (0x0021) is set.

Full count register access should take place in one clock cycle. A separate read/write for high byte and low byte will give a different result than accessing them as a word.

**NOTE**

Reading the pulse accumulator counter registers immediately after an active edge on the pulse accumulator input pin may miss the last count because the input has to be synchronized with the bus clock first.

## 15.4 Functional Description

This section provides a complete functional description of the timer TIM16B8CV1 block. Please refer to the detailed timer block diagram in Figure 15-28 as necessary.

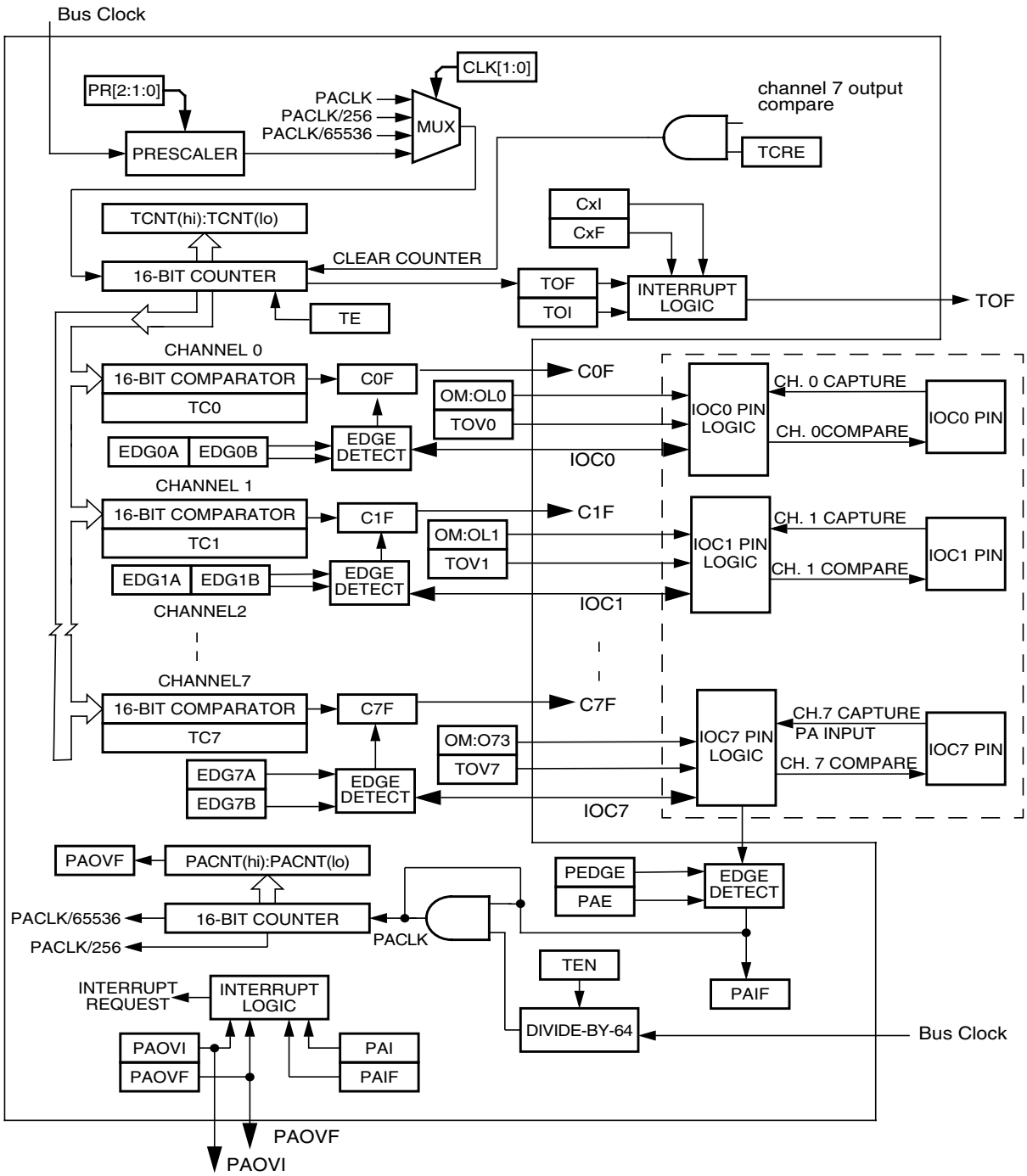


**Figure 15-28. Detailed Timer Block Diagram**

## 15.4.1 Prescaler

The prescaler divides the bus clock by 1,2,4,8,16,32,64 or 128. The prescaler select bits, PR[2:0], select the prescaler divisor. PR[2:0] are in timer system control register 2 (TSCR2).

### 15.4.2 Input Capture

Clearing the I/O (input/output) select bit, IOSx, configures channel x as an input capture channel. The input capture function captures the time at which an external event occurs. When an active edge occurs on the pin of an input capture channel, the timer transfers the value in the timer counter into the timer channel registers, TCx.

The minimum pulse width for the input capture input is greater than two bus clocks.

An input capture on channel x sets the CxF flag. The CxI bit enables the CxF flag to generate interrupt requests. Timer module must stay enabled (TEN bit of TSCR1 must be set to one) while clearing CxF (writing one to CxF).

### 15.4.3 Output Compare

Setting the I/O select bit, IOSx, configures channel x as an output compare channel. The output compare function can generate a periodic pulse with a programmable polarity, duration, and frequency. When the timer counter reaches the value in the channel registers of an output compare channel, the timer can set, clear, or toggle the channel pin. An output compare on channel x sets the CxF flag. The CxI bit enables the CxF flag to generate interrupt requests. Timer module must stay enabled (TEN bit of TSCR1 register must be set to one) while clearing CxF (writing one to CxF).

The output mode and level bits, OMx and OLx, select set, clear, toggle on output compare. Clearing both OMx and OLx disconnects the pin from the output logic.

Setting a force output compare bit, FOCx, causes an output compare on channel x. A forced output compare does not set the channel flag.

A successful output compare on channel 7 overrides output compares on all other output compare channels. The output compare 7 mask register masks the bits in the output compare 7 data register. The timer counter reset enable bit, TCRE, enables channel 7 output compares to reset the timer counter. A channel 7 output compare can reset the timer counter even if the IOC7 pin is being used as the pulse accumulator input.

Writing to the timer port bit of an output compare pin does not affect the pin state. The value written is stored in an internal latch. When the pin becomes available for general-purpose output, the last value written to the bit appears at the pin.

When TCRE is set and TC7 is not equal to 0, then TCNT will cycle from 0 to TC7. When TCNT reaches TC7 value, it will last only one bus cycle then reset to 0.

Note: in Figure 15-29,if PR[2:0] is equal to 0, one prescaler counter equal to one bus clock

**Figure 15-29. The TCNT cycle diagram under TCRE=1 condition**

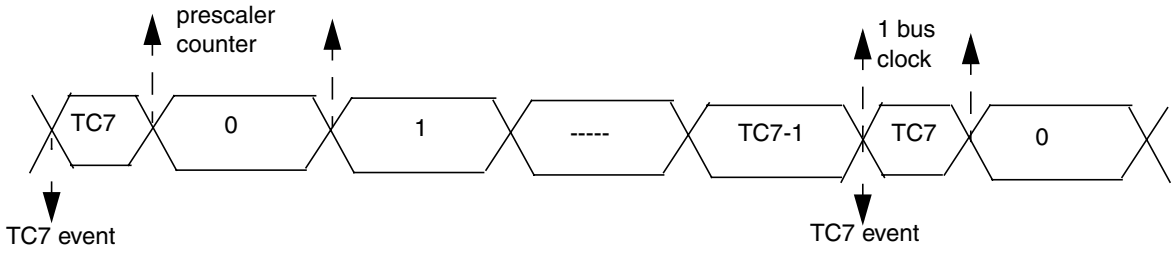


## 15.4.4 Pulse Accumulator

The pulse accumulator (PACNT) is a 16-bit counter that can operate in two modes:

Event counter mode — Counting edges of selected polarity on the pulse accumulator input pin, PAI.

Gated time accumulation mode — Counting pulses from a divide-by-64 clock. The PAMOD bit selects the mode of operation.

The minimum pulse width for the PAI input is greater than two bus clocks.

## 15.4.5 Event Counter Mode

Clearing the PAMOD bit configures the PACNT for event counter operation. An active edge on the IOC7 pin increments the pulse accumulator counter. The PEDGE bit selects falling edges or rising edges to increment the count.

**NOTE**

The PACNT input and timer channel 7 use the same pin IOC7. To use the IOC7, disconnect it from the output logic by clearing the channel 7 output mode and output level bits, OM7 and OL7. Also clear the channel 7 output compare 7 mask bit, OC7M7.

The Pulse Accumulator counter register reflect the number of active input edges on the PACNT input pin since the last reset.

The PAOVF bit is set when the accumulator rolls over from 0xFFFF to 0x0000. The pulse accumulator overflow interrupt enable bit, PAOVI, enables the PAOVF flag to generate interrupt requests.

**NOTE**

The pulse accumulator counter can operate in event counter mode even when the timer enable bit, TEN, is clear.

### 15.4.6 Gated Time Accumulation Mode

Setting the PAMOD bit configures the pulse accumulator for gated time accumulation operation. An active level on the PACNT input pin enables a divided-by-64 clock to drive the pulse accumulator. The PEDGE bit selects low levels or high levels to enable the divided-by-64 clock.

The trailing edge of the active level at the IOC7 pin sets the PAIF. The PAI bit enables the PAIF flag to generate interrupt requests.

The pulse accumulator counter register reflect the number of pulses from the divided-by-64 clock since the last reset.

**NOTE**

The timer prescaler generates the divided-by-64 clock. If the timer is not active, there is no divided-by-64 clock.

## 15.5 Resets

The reset state of each individual bit is listed within Section 15.3, “Memory Map and Register Definition” which details the registers and their bit fields.

## 15.6 Interrupts

This section describes interrupts originated by the TIM16B8CV1 block. Table 15-23 lists the interrupts generated by the TIM16B8CV1 to communicate with the MCU.

**Table 15-23. TIM16B8CV1 Interrupts**

| Interrupt | Offset (1) | Vector[1] | Priority[1] | Source | Description |
|---|---|---|---|---|---|
| C[7:0]F | — | — | — | Timer Channel 7–0 | Active high timer channel interrupts 7–0 |
| PAOVI | — | — | — | Pulse Accumulator Input | Active high pulse accumulator input interrupt |
| PAOVF | — | — | — | Pulse Accumulator Overflow | Pulse accumulator overflow interrupt |
| TOF | — | — | — | Timer Overflow | Timer Overflow interrupt |

1. Chip Dependent.

The TIM16B8CV1 uses a total of 11 interrupt vectors. The interrupt vector offsets and interrupt numbers are chip dependent.

### 15.6.1 Channel [7:0] Interrupt (C[7:0]F)

This active high outputs will be asserted by the module to request a timer channel 7 – 0 interrupt to be serviced by the system controller.

### 15.6.2 Pulse Accumulator Input Interrupt (PAOVI)

This active high output will be asserted by the module to request a timer pulse accumulator input interrupt to be serviced by the system controller.

### 15.6.3 Pulse Accumulator Overflow Interrupt (PAOVF)

This active high output will be asserted by the module to request a timer pulse accumulator overflow interrupt to be serviced by the system controller.

### 15.6.4 Timer Overflow Interrupt (TOF)

This active high output will be asserted by the module to request a timer overflow interrupt to be serviced by the system controller.

# Chapter 16
# Dual Output Voltage Regulator (VREG3V3V2) Block Description

## 16.1 Introduction

The VREG3V3V2 is a dual output voltage regulator providing two separate 2.5 V (typical) supplies differing in the amount of current that can be sourced. The regulator input voltage range is from 3.3 V up to 5 V (typical).

### 16.1.1 Features

The block VREG3V3V2 includes these distinctive features:

- Two parallel, linear voltage regulators
  - Bandgap reference
- Low-voltage detect (LVD) with low-voltage interrupt (LVI)
- Power-on reset (POR)
- Low-voltage reset (LVR)

### 16.1.2 Modes of Operation

There are three modes VREG3V3V2 can operate in:

- Full-performance mode (FPM) (MCU is not in stop mode)

  The regulator is active, providing the nominal supply voltage of 2.5 V with full current sourcing capability at both outputs. Features LVD (low-voltage detect), LVR (low-voltage reset), and POR (power-on reset) are available.
- Reduced-power mode (RPM) (MCU is in stop mode)

  The purpose is to reduce power consumption of the device. The output voltage may degrade to a lower value than in full-performance mode, additionally the current sourcing capability is substantially reduced. Only the POR is available in this mode, LVD and LVR are disabled.
- Shutdown mode

  Controlled by $V_{REGEN}$ (see device overview chapter for connectivity of $V_{REGEN}$).

  This mode is characterized by minimum power consumption. The regulator outputs are in a high impedance state, only the POR feature is available, LVD and LVR are disabled.

  This mode must be used to disable the chip internal regulator VREG3V3V2, i.e., to bypass the VREG3V3V2 to use external supplies.

### 16.1.3 Block Diagram

Figure 16-1 shows the function principle of VREG3V3V2 by means of a block diagram. The regulator core REG consists of two parallel sub-blocks, REG1 and REG2, providing two independent output voltages.

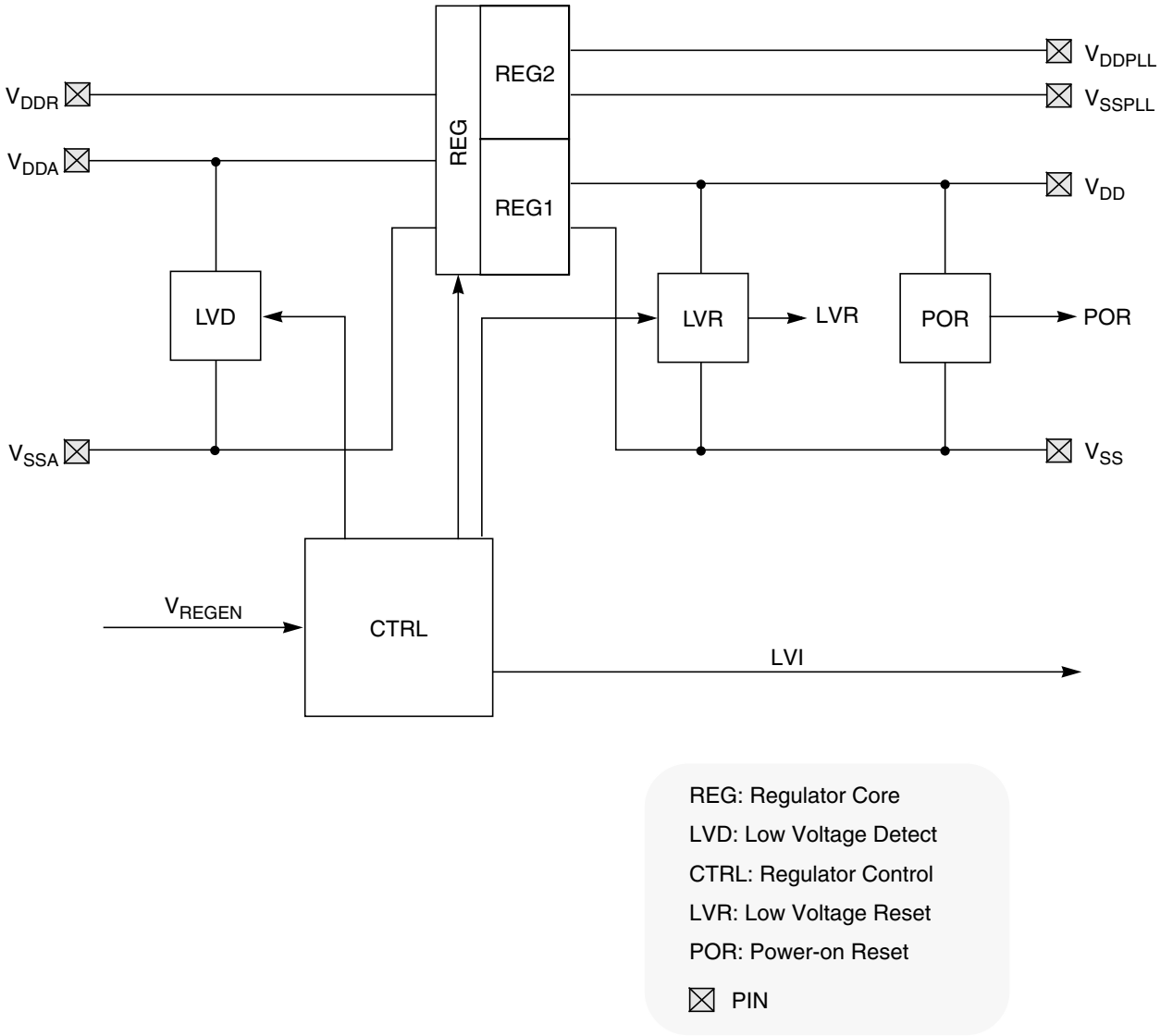


**Figure 16-1. VREG3V3 Block Diagram**

## 16.2 External Signal Description

Due to the nature of VREG3V3V2 being a voltage regulator providing the chip internal power supply voltages most signals are power supply signals connected to pads.

Table 16-1 shows all signals of VREG3V3V2 associated with pins.

**Table 16-1. VREG3V3V2 — Signal Properties**

| Name | Port | Function | Reset State | Pull Up |
|---|---|---|---|---|
| $V_{DDR}$ | — | VREG3V3V2 power input (positive supply) | — | — |
| $V_{DDA}$ | — | VREG3V3V2 quiet input (positive supply) | — | — |
| $V_{SSA}$ | — | VREG3V3V2 quiet input (ground) | — | — |
| $V_{DD}$ | — | VREG3V3V2 primary output (positive supply) | — | — |
| $V_{SS}$ | — | VREG3V3V2 primary output (ground) | — | — |
| $V_{DDPLL}$ | — | VREG3V3V2 secondary output (positive supply) | — | — |
| $V_{SSPLL}$ | — | VREG3V3V2 secondary output (ground) | — | — |
| $V_{REGEN}$ (optional) | — | VREG3V3V2 (Optional) Regulator Enable | — | — |

**NOTE**

Check device overview chapter for connectivity of the signals.

### 16.2.1 $V_{DDR}$ — Regulator Power Input

Signal $V_{DDR}$ is the power input of VREG3V3V2. All currents sourced into the regulator loads flow through this pin. A chip external decoupling capacitor (100 nF...220 nF, X7R ceramic) between $V_{DDR}$ and $V_{SSR}$ can smoothen ripple on $V_{DDR}$.

For entering Shutdown Mode, pin $V_{DDR}$ should also be tied to ground on devices without a $V_{REGEN}$ pin.

### 16.2.2 $V_{DDA}$, $V_{SSA}$ — Regulator Reference Supply

Signals $V_{DDA}/V_{SSA}$ which are supposed to be relatively quiet are used to supply the analog parts of the regulator. Internal precision reference circuits are supplied from these signals. A chip external decoupling capacitor (100 nF...220 nF, X7R ceramic) between $V_{DDA}$ and $V_{SSA}$ can further improve the quality of this supply.

### 16.2.3 $V_{DD}$, $V_{SS}$ — Regulator Output1 (Core Logic)

Signals $V_{DD}/V_{SS}$ are the primary outputs of VREG3V3V2 that provide the power supply for the core logic. These signals are connected to device pins to allow external decoupling capacitors (100 nF...220 nF, X7R ceramic).

In Shutdown Mode an external supply at $V_{DD}/V_{SS}$ can replace the voltage regulator.

### 16.2.4 $V_{DDPLL}$, $V_{SSPLL}$ — Regulator Output2 (PLL)

Signals $V_{DDPLL}/V_{SSPLL}$ are the secondary outputs of VREG3V3V2 that provide the power supply for the PLL and oscillator. These signals are connected to device pins to allow external decoupling capacitors (100 nF...220 nF, X7R ceramic).

In Shutdown Mode an external supply at $V_{DDPLL}/V_{SSPLL}$ can replace the voltage regulator.

### 16.2.5 $V_{REGEN}$ — Optional Regulator Enable

This optional signal is used to shutdown VREG3V3V2. In that case $V_{DD}/V_{SS}$ and $V_{DDPLL}/V_{SSPLL}$ must be provided externally. Shutdown Mode is entered with $V_{REGEN}$ being low. If $V_{REGEN}$ is high, the VREG3V3V2 is either in Full Performance Mode or in Reduced Power Mode.

For the connectivity of $V_{REGEN}$ see device overview chapter.

**NOTE**

Switching from FPM or RPM to shutdown of VREG3V3V2 and vice versa is not supported while the MCU is powered.

## 16.3 Memory Map and Register Definition

This subsection provides a detailed description of all registers accessible in VREG3V3V2.

### 16.3.1 Module Memory Map

Figure 16-2 provides an overview of all used registers.

**Table 16-2. VREG3V3V2 Memory Map**

| Address Offset | Use | Access |
|---|---|---|
| 0x0000 | VREG3V3V2 Control Register (VREGCTRL) | R/W |

### 16.3.2 Register Descriptions

The following paragraphs describe, in address order, all the VREG3V3V2 registers and their individual bits.

#### 16.3.2.1 VREG3V3V2 — Control Register (VREGCTRL)

The VREGCTRL register allows to separately enable features of VREG3V3V2.

Module Base + 0x0000

| | 7 | 6 | 5 | 4 | 3 | 2 | 1 | 0 |
|---|---|---|---|---|---|---|---|---|
| R | 0 | 0 | 0 | 0 | 0 | LVDS | LVIE | LVIF |
| W | | | | | | | | |
| Reset | 0 | 0 | 0 | 0 | 0 | 0 | 0 | 0 |

= Unimplemented or Reserved

**Figure 16-2. VREG3V3 — Control Register (VREGCTRL)**

**Table 16-3. MCCTL1 Field Descriptions**

| Field | Description |
|---|---|
| 2<br>LVDS | **Low-Voltage Detect Status Bit** — This read-only status bit reflects the input voltage. Writes have no effect.<br>0 Input voltage $V_{DDA}$ is above level $V_{LVID}$ or RPM or shutdown mode.<br>1 Input voltage $V_{DDA}$ is below level $V_{LVIA}$ and FPM. |
| 1<br>LVIE | **Low-Voltage Interrupt Enable Bit**<br>0 Interrupt request is disabled.<br>1 Interrupt will be requested whenever LVIF is set. |
| 0<br>LVIF | **Low-Voltage Interrupt Flag** — LVIF is set to 1 when LVDS status bit changes. This flag can only be cleared by writing a 1. Writing a 0 has no effect. If enabled (LVIE = 1), LVIF causes an interrupt request.<br>0 No change in LVDS bit.<br>1 LVDS bit has changed. |

**NOTE**

On entering the Reduced Power Mode the LVIF is not cleared by the VREG3V3V2.

## 16.4 Functional Description

Block VREG3V3V2 is a voltage regulator as depicted in Figure 16-1. The regulator functional elements are the regulator core (REG), a low-voltage detect module (LVD), a power-on reset module (POR) and a low-voltage reset module (LVR). There is also the regulator control block (CTRL) which represents the interface to the digital core logic but also manages the operating modes of VREG3V3V2.

### 16.4.1 REG — Regulator Core

VREG3V3V2, respectively its regulator core has two parallel, independent regulation loops (REG1 and REG2) that differ only in the amount of current that can be sourced to the connected loads. Therefore, only REG1 providing the supply at $V_{DD}/V_{SS}$ is explained. The principle is also valid for REG2.

The regulator is a linear series regulator with a bandgap reference in its Full Performance Mode and a voltage clamp in Reduced Power Mode. All load currents flow from input $V_{DDR}$ to $V_{SS}$ or $V_{SSPLL}$, the reference circuits are connected to $V_{DDA}$ and $V_{SSA}$.

### 16.4.2 Full-Performance Mode

In Full Performance Mode, a fraction of the output voltage ($V_{DD}$) and the bandgap reference voltage are fed to an operational amplifier. The amplified input voltage difference controls the gate of an output driver which basically is a large NMOS transistor connected to the output.

### 16.4.3 Reduced-Power Mode

In Reduced Power Mode, the driver gate is connected to a buffered fraction of the input voltage ($V_{DDR}$). The operational amplifier and the bandgap are disabled to reduce power consumption.

### 16.4.4 LVD — Low-Voltage Detect

sub-block LVD is responsible for generating the low-voltage interrupt (LVI). LVD monitors the input voltage ($V_{DDA}$–$V_{SSA}$) and continuously updates the status flag LVDS. Interrupt flag LVIF is set whenever status flag LVDS changes its value. The LVD is available in FPM and is inactive in Reduced Power Mode and Shutdown Mode.

### 16.4.5 POR — Power-On Reset

This functional block monitors output $V_{DD}$. If $V_{DD}$ is below $V_{PORD}$, signal POR is high, if it exceeds $V_{PORD}$, the signal goes low. The transition to low forces the CPU in the power-on sequence.

Due to its role during chip power-up this module must be active in all operating modes of VREG3V3V2.

### 16.4.6 LVR — Low-Voltage Reset

Block LVR monitors the primary output voltage $V_{DD}$. If it drops below the assertion level ($V_{LVRA}$) signal LVR asserts and when rising above the deassertion level ($V_{LVRD}$) signal LVR negates again. The LVR function is available only in Full Performance Mode.

### 16.4.7 CTRL — Regulator Control

This part contains the register block of VREG3V3V2 and further digital functionality needed to control the operating modes. CTRL also represents the interface to the digital core logic.

## 16.5 Resets

This subsection describes how VREG3V3V2 controls the reset of the MCU.The reset values of registers and signals are provided in Section 16.3, “Memory Map and Register Definition”. Possible reset sources are listed in Table 16-4.

**Table 16-4. VREG3V3V2 — Reset Sources**

| Reset Source | Local Enable |
|---|---|
| Power-on reset | Always active |
| Low-voltage reset | Available only in Full Performance Mode |

### 16.5.1 Power-On Reset

During chip power-up the digital core may not work if its supply voltage $V_{DD}$ is below the POR deassertion level ($V_{PORD}$). Therefore, signal POR which forces the other blocks of the device into reset is kept high until $V_{DD}$ exceeds $V_{PORD}$. Then POR becomes low and the reset generator of the device continues the start-up sequence. The power-on reset is active in all operation modes of VREG3V3V2.

### 16.5.2 Low-Voltage Reset

For details on low-voltage reset see Section 16.4.6, “LVR — Low-Voltage Reset”.

## 16.6 Interrupts

This subsection describes all interrupts originated by VREG3V3V2.

The interrupt vectors requested by VREG3V3V2 are listed in Table 16-5. Vector addresses and interrupt priorities are defined at MCU level.

**Table 16-5. VREG3V3V2 — Interrupt Vectors**

| Interrupt Source | Local Enable |
|---|---|
| Low Voltage Interrupt (LVI) | LVIE = 1; Available only in Full Performance Mode |

### 16.6.1 LVI — Low-Voltage Interrupt

In FPM VREG3V3V2 monitors the input voltage $V_{DDA}$. Whenever $V_{DDA}$ drops below level $V_{LVIA}$ the status bit LVDS is set to 1. Vice versa, LVDS is reset to 0 when $V_{DDA}$ rises above level $V_{LVID}$. An interrupt, indicated by flag LVIF = 1, is triggered by any change of the status bit LVDS if interrupt enable bit LVIE = 1.

**NOTE**

On entering the Reduced Power Mode, the LVIF is not cleared by the VREG3V3V2.

# Chapter 17
# 16 Kbyte Flash Module (S12FTS16KV1)

## 17.1 Introduction

The FTS16K module implements a 16 Kbyte Flash (nonvolatile) memory. The Flash memory contains one array of 16 Kbytes organized as 256 rows of 64 bytes with an erase sector size of eight rows (512 bytes). The Flash array may be read as either bytes, aligned words, or misaligned words. Read access time is one bus cycle for byte and aligned word, and two bus cycles for misaligned words.

The Flash array is ideal for program and data storage for single-supply applications allowing for field reprogramming without requiring external voltage sources for program or erase. Program and erase functions are controlled by a command driven interface. The Flash module supports both mass erase and sector erase. An erased bit reads 1 and a programmed bit reads 0. The high voltage required to program and erase is generated internally. It is not possible to read from a Flash array while it is being erased or programmed.

**CAUTION**

A Flash word must be in the erased state before being programmed.
Cumulative programming of bits within a Flash word is not allowed.

### 17.1.1 Glossary

**Command Write Sequence** — A three-step MCU instruction sequence to program, erase, or erase verify the Flash array memory.

### 17.1.2 Features

- 16 Kbytes of Flash memory comprised of one 16 Kbyte array divided into 32 sectors of 512 bytes
- Automated program and erase algorithm
- Interrupts on Flash command completion and command buffer empty
- Fast sector erase and word program operation
- 2-stage command pipeline for faster multi-word program times
- Flexible protection scheme to prevent accidental program or erase
- Single power supply for Flash program and erase operations
- Security feature to prevent unauthorized access to the Flash array memory

### 17.1.3 Modes of Operation

See Section 17.4.2, “Operating Modes” for a description of the Flash module operating modes. For program and erase operations, refer to Section 17.4.1, “Flash Command Operations”.

### 17.1.4 Block Diagram

Figure 17-1 shows a block diagram of the FTS16K module.

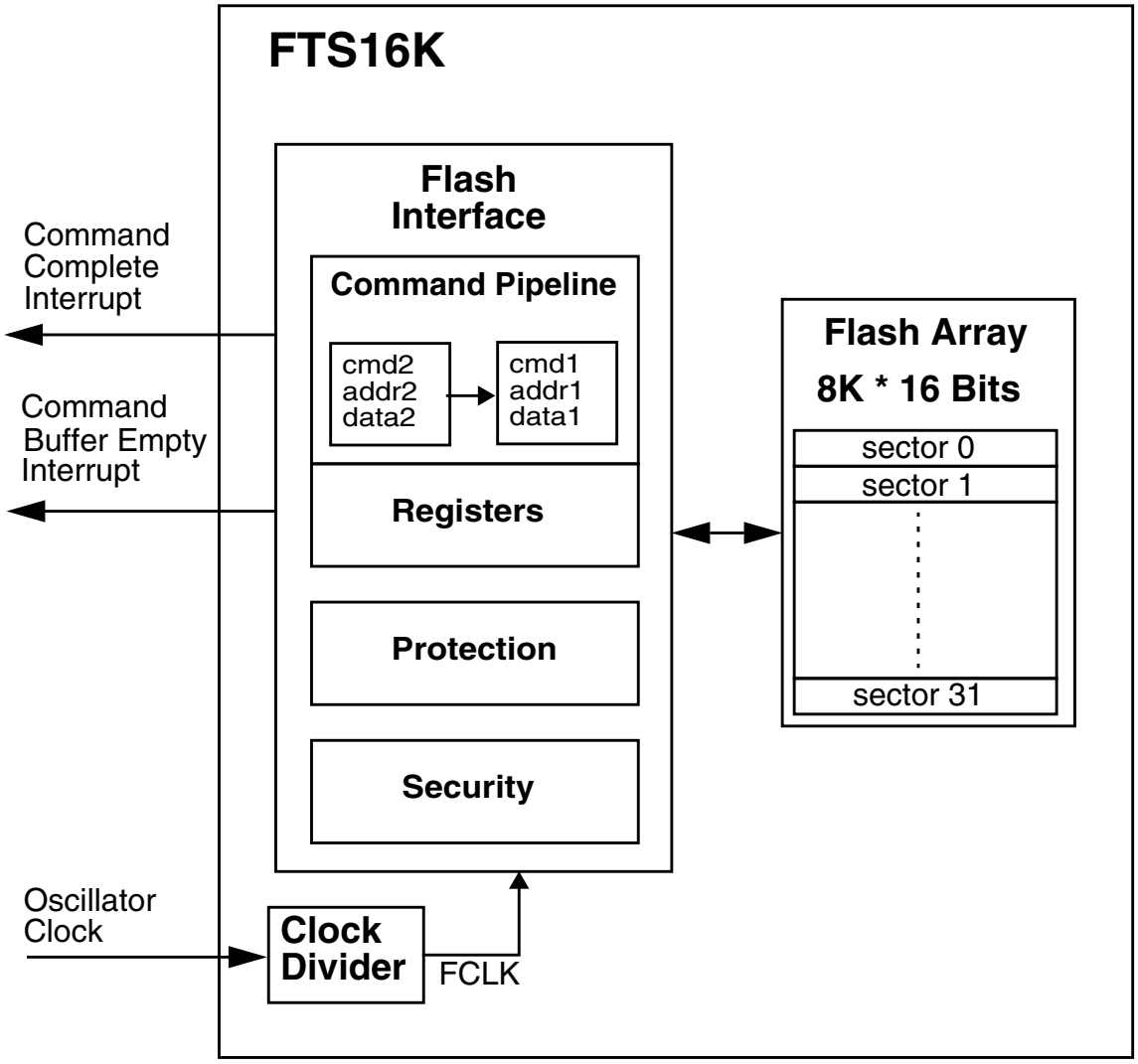


Figure 17-1. FTS16K Block Diagram

## 17.2 External Signal Description

The FTS16K module contains no signals that connect off-chip.

## 17.3 Memory Map and Registers

This section describes the FTS16K memory map and registers.

### 17.3.1 Module Memory Map

The FTS16K memory map is shown in Figure 17-2. The HCS12 architecture places the Flash array addresses between 0xC000 and 0xFFFF. The content of the HCS12 Core PPAGE register is used to map the logical page ranging from address 0x8000 to 0xBFFF to a physical 16K byte page in the Flash array memory.[1] The FPROT register (see Section 17.3.2.5) can be set to globally protect the entire Flash array or one growing downward from the Flash array end address. The higher address area is mainly targeted to hold the boot loader code since it covers the vector space. Default protection settings as well as security information that allows the MCU to restrict access to the Flash module are stored in the Flash configuration field described in Table 17-1.

**Table 17-1. Flash Configuration Field**

| Flash Address | Size (bytes) | Description |
|---|---|---|
| 0xFF00–0xFF07 | 8 | Backdoor Key to unlock security |
| 0xFF08–0xFF0C | 5 | Reserved |
| 0xFF0D | 1 | Flash Protection byte<br>Refer to Section 17.3.2.5, “Flash Protection Register (FPROT)” |
| 0xFF0E | 1 | Reserved |
| 0xFF0F | 1 | Flash Security/Options byte<br>Refer to Section 17.3.2.2, “Flash Security Register (FSEC)” |

1. By placing 0x3F in the HCS12 Core PPAGE register, the 16 Kbyte page can be seen twice in the MCU memory map.

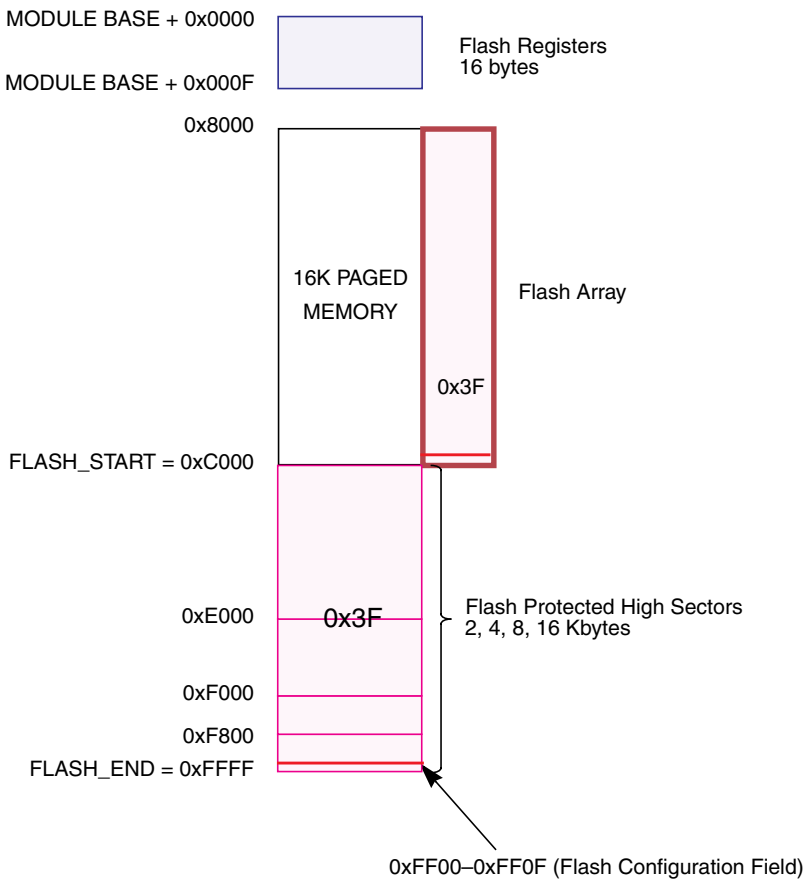


Note: 0x3F corresponds to the PPAGE register content

**Figure 17-2. Flash Memory Map**

**Table 17-2. Flash Array Memory Map Summary**

| MCU Address Range | PPAGE | Protectable Address Range |
|---|---|---|
| 0x8000–0xBFFF | 0x3F | 0xB800–0xBFFF<br>0xB000–0xBFFF<br>0xA000–0xBFFF<br>0x8000–0xBFFF |
| 0xC000–0xFFFF | Unpaged (0x3F) | 0xF800–0xFFFF<br>0xF000–0xFFFF<br>0xE000–0xFFFF<br>0xC000–0xFFFF |

### 17.3.2 Register Descriptions

The Flash module contains a set of 16 control and status registers located between module base + 0x0000 and 0x000F. A summary of the Flash module registers is given in Figure 17-3. Detailed descriptions of each register bit are provided.

| Register Name | | Bit 7 | 6 | 5 | 4 | 3 | 2 | 1 | Bit 0 |
|---|---|---|---|---|---|---|---|---|---|
| 0x0000 FCLKDIV | R | FDIVLD | PRDIV8 | FDIV5 | FDIV4 | FDIV3 | FDIV2 | FDIV1 | FDIV0 |
| | W | | | | | | | | |
| 0x0001 FSEC | R | KEYEN1 | KEYEN0 | NV5 | NV4 | NV3 | NV2 | SEC1 | SEC0 |
| | W | | | | | | | | |
| 0x0002 RESERVED1 (1) | R | 0 | 0 | 0 | 0 | 0 | 0 | 0 | 0 |
| | W | | | | | | | | |
| 0x0003 FCNFG | R | CBEIE | CCIE | KEYACC | 0 | 0 | 0 | 0 | 0 |
| | W | | | | | | | | |
| 0x0004 FPROT | R | FPOPEN | NV6 | FPHDIS | FPHS1 | FPHS0 | NV2 | NV1 | NV0 |
| | W | | | | | | | | |
| 0x0005 FSTAT | R | CBEIF | CCIF | PVIOL | ACCERR | 0 | BLANK | FAIL | DONE |
| | W | | | | | | | | |
| 0x0006 FCMD | R | 0 | CMDB6 | CMDB5 | 0 | 0 | CMDB2 | 0 | CMDB0 |
| | W | | | | | | | | |
| 0x0007 RESERVED2[1] | R | 0 | 0 | 0 | 0 | 0 | 0 | 0 | 0 |
| | W | | | | | | | | |
| 0x0008 FADDRHI[1] | R | 0 | 0 | 0 | FABHI | | | | |
| | W | | | | | | | | |
| 0x0009 FADDRLO[1] | R | FABLO | | | | | | | |
| | W | | | | | | | | |
| 0x000A FDATAHI[1] | R | FDHI | | | | | | | |
| | W | | | | | | | | |
| 0x000B FDATALO[1] | R | FDLO | | | | | | | |
| | W | | | | | | | | |
| 0x000C RESERVED3[1] | R | 0 | 0 | 0 | 0 | 0 | 0 | 0 | 0 |
| | W | | | | | | | | |
| 0x000D RESERVED4[1] | R | 0 | 0 | 0 | 0 | 0 | 0 | 0 | 0 |
| | W | | | | | | | | |
| 0x000E RESERVED5[1] | R | 0 | 0 | 0 | 0 | 0 | 0 | 0 | 0 |
| | W | | | | | | | | |
| 0x000F RESERVED6[1] | R | 0 | 0 | 0 | 0 | 0 | 0 | 0 | 0 |
| | W | | | | | | | | |

= Unimplemented or Reserved

**Figure 17-3. Flash Register Summary**

1. Intended for factory test purposes only.

### 17.3.2.1 Flash Clock Divider Register (FCLKDIV)

The FCLKDIV register is used to control timed events in program and erase algorithms.

Module Base + 0x0000

| | 7 | 6 | 5 | 4 | 3 | 2 | 1 | 0 |
|---|---|---|---|---|---|---|---|---|
| R | FDIVLD | PRDIV8 | FDIV5 | FDIV4 | FDIV3 | FDIV2 | FDIV1 | FDIV0 |
| W | | | | | | | | |
| Reset | 0 | 0 | 0 | 0 | 0 | 0 | 0 | 0 |

= Unimplemented or Reserved

**Figure 17-4. Flash Clock Divider Register (FCLKDIV)**

All bits in the FCLKDIV register are readable, bits 6–0 are write once and bit 7 is not writable.

**Table 17-3. FCLKDIV Field Descriptions**

| Field | Description |
|---|---|
| 7<br>FDIVLD | **Clock Divider Loaded**<br>0 FCLKDIV register has not been written<br>1 FCLKDIV register has been written to since the last reset |
| 6<br>PRDIV8 | **Enable Prescalar by 8**<br>0 The oscillator clock is directly fed into the Flash clock divider<br>1 The oscillator clock is divided by 8 before feeding into the Flash clock divider |
| 5–0<br>FDIV[5:0] | **Clock Divider Bits** — The combination of PRDIV8 and FDIV[5:0] must divide the oscillator clock down to a frequency of 150 kHz – 200 kHz. The maximum divide ratio is 512. Refer to Section 17.4.1.1, “Writing the FCLKDIV Register” for more information. |

### 17.3.2.2 Flash Security Register (FSEC)

The FSEC register holds all bits associated with the security of the MCU and Flash module.

Module Base + 0x0001

| | 7 | 6 | 5 | 4 | 3 | 2 | 1 | 0 |
|---|---|---|---|---|---|---|---|---|
| R | KEYEN1 | KEYEN0 | NV5 | NV4 | NV3 | NV2 | SEC1 | SEC0 |
| W | | | | | | | | |
| Reset | F | F | F | F | F | F | F | F |

= Unimplemented or Reserved

**Figure 17-5. Flash Security Register (FSEC)**

All bits in the FSEC register are readable but not writable.

The FSEC register is loaded from the Flash configuration field at 0xFF0F during the reset sequence, indicated by F in Figure 17-5.

**Table 17-4. FSEC Field Descriptions**

| Field | Description |
|---|---|
| 7–6<br>KEYEN[1:0] | **Backdoor Key Security Enable Bits** — The KEYEN[1:0] bits define the enabling of the backdoor key access to the Flash module as shown in Table 17-5. |
| 5–2<br>NV[5:2] | **Nonvolatile Flag Bits** — The NV[5:2] bits are available to the user as nonvolatile flags. |
| 1–0<br>SEC[1:0] | **Flash Security Bits** — The SEC[1:0] bits define the security state of the MCU as shown in Table 17-6. If the Flash module is unsecured using backdoor key access, the SEC[1:0] bits are forced to 1:0. |

**Table 17-5. Flash KEYEN States**

| KEYEN[1:0] | Status of Backdoor Key Access |
|---|---|
| 00 | DISABLED |
| 01[1] | DISABLED |
| 10 | ENABLED |
| 11 | DISABLED |

1. Preferred KEYEN state to disable Backdoor Key Access.

**Table 17-6. Flash Security States**

| SEC[1:0] | Status of Security |
|---|---|
| 00 | Secured |
| 01[1] | Secured |
| 10 | Unsecured |
| 11 | Secured |

1. Preferred SEC state to set MCU to secured state.

The security function in the Flash module is described in Section 17.4.3, “Flash Module Security”.

### 17.3.2.3 RESERVED1

This register is reserved for factory testing and is not accessible to the user.

Module Base + 0x0002

| | 7 | 6 | 5 | 4 | 3 | 2 | 1 | 0 |
|---|---|---|---|---|---|---|---|---|
| R | 0 | 0 | 0 | 0 | 0 | 0 | 0 | 0 |
| W | | | | | | | | |
| Reset | 0 | 0 | 0 | 0 | 0 | 0 | 0 | 0 |

= Unimplemented or Reserved

**Figure 17-6. RESERVED1**

All bits read 0 and are not writable.

### 17.3.2.4 Flash Configuration Register (FCNFG)

The FCNFG register enables the Flash interrupts and gates the security backdoor key writes.

Module Base + 0x0003

| | 7 | 6 | 5 | 4 | 3 | 2 | 1 | 0 |
|---|---|---|---|---|---|---|---|---|
| R | CBEIE | CCIE | KEYACC | 0 | 0 | 0 | 0 | 0 |
| W | | | | | | | | |
| Reset | 0 | 0 | 0 | 0 | 0 | 0 | 0 | 0 |

= Unimplemented or Reserved

**Figure 17-7. Flash Configuration Register (FCNFG)**

CBEIE, CCIE, and KEYACC are readable and writable while remaining bits read 0 and are not writable. KEYACC is only writable if the KEYEN bit in the FSEC register is set to the enabled state (see Section 17.3.2.2).

**Table 17-7. FCNFG Field Descriptions**

| Field | Description |
|---|---|
| 7<br>CBEIE | **Command Buffer Empty Interrupt Enable** — The CBEIE bit enables the interrupts in case of an empty command buffer in the Flash module.<br>0 Command Buffer Empty interrupts disabled<br>1 An interrupt will be requested whenever the CBEIF flag is set (see Section 17.3.2.6) |
| 6<br>CCIE | **Command Complete Interrupt Enable** — The CCIE bit enables the interrupts in case of all commands being completed in the Flash module.<br>0 Command Complete interrupts disabled<br>1 An interrupt will be requested whenever the CCIF flag is set (see Section 17.3.2.6) |
| 5<br>KEYACC | **Enable Security Key Writing**.<br>0 Flash writes are interpreted as the start of a command write sequence<br>1 Writes to the Flash array are interpreted as a backdoor key while reads of the Flash array return invalid data |

### 17.3.2.5 Flash Protection Register (FPROT)

The FPROT register defines which Flash sectors are protected against program or erase.

Module Base + 0x0004

| | 7 | 6 | 5 | 4 | 3 | 2 | 1 | 0 |
|---|---|---|---|---|---|---|---|---|
| R | FPOPEN | NV6 | FPHDIS | FPHS1 | FPHS0 | NV2 | NV1 | NV0 |
| W | | | | | | | | |
| Reset | F | F | F | F | F | F | F | F |

**Figure 17-8. Flash Protection Register (FPROT)**

The FPROT register is readable in normal and special modes. FPOPEN can only be written from a 1 to a 0. FPHS[1:0] can be written anytime until FPHDIS is cleared. The FPROT register is loaded from Flash address 0xFF0D during the reset sequence, indicated by F in Figure 17-8.

To change the Flash protection that will be loaded on reset, the upper sector of the Flash array must be unprotected, then the Flash protection byte located at Flash address 0xFF0D must be written to.

A protected Flash sector is disabled by FPHDIS while the size of the protected sector is defined by FPHS[1:0] in the FPROT register.

Trying to alter any of the protected areas will result in a protect violation error and the PVIOL flag will be set in the FSTAT register (see Section 17.3.2.6). A mass erase of the whole Flash array is only possible when protection is fully disabled by setting the FPOPEN and FPHDIS bits. An attempt to mass erase a Flash array while protection is enabled will set the PVIOL flag in the FSTAT register.

**Table 17-8. FPROT Field Descriptions**

| Field | Description |
|---|---|
| 7<br>FPOPEN | **Protection Function for Program or Erase** — The FPOPEN bit is used to either select an address range to be protected using the FPHDIS and FPHS[1:0] bits or to select the same address range to be unprotected as shown in Table 17-9.<br>0 The FPHDIS bit allows a Flash address range to be unprotected<br>1 The FPHDIS bit allows a Flash address range to be protected |
| 6<br>NV6 | **Nonvolatile Flag Bit** — The NV6 bit should remain in the erased state for future enhancements. |
| 5<br>FPHDIS | **Flash Protection Higher Address Range Disable** — The FPHDIS bit determines whether there is a protected/unprotected area in the higher space of the Flash address map.<br>0 Protection/unprotection enabled<br>1 Protection/unprotection disabled |
| 4–3<br>FPHS[1:0] | **Flash Protection Higher Address Size** — The FPHS[1:0] bits determine the size of the protected/unprotected sector as shown in Table 17-10. The FPHS[1:0] bits can only be written to while the FPHDIS bit is set. |
| 2–0<br>NV[2:0] | **Nonvolatile Flag Bits** — The NV[2:0] bits should remain in the erased state for future enhancements. |

**Table 17-9. Flash Protection Function**

| FPOPEN | FPHDIS | FPHS1 | FPHS0 | Function[1] |
|---|---|---|---|---|
| 1 | 1 | x | x | No protection |
| 1 | 0 | x | x | Protect high range |
| 0 | 1 | x | x | Full Flash array protected |
| 0 | 0 | x | x | Unprotected high range |

1. For range sizes refer to Table 17-10.

**Table 17-10. Flash Protection Higher Address Range**

| FPHS[1:0] | Address Range | Range Size |
|---|---|---|
| 00 | 0xF800–0xFFFF | 2 Kbytes |
| 01 | 0xF000–0xFFFF | 4 Kbytes |
| 10 | 0xE000–0xFFFF | 8 Kbytes |
| 11 | 0xC000–0xFFFF | 16 Kbytes |

Figure 17-9 illustrates all possible protection scenarios. Although the protection scheme is loaded from the Flash array after reset, it is allowed to change in normal modes. This protection scheme can be used by applications requiring re-programming in single chip mode while providing as much protection as possible if no re-programming is required.

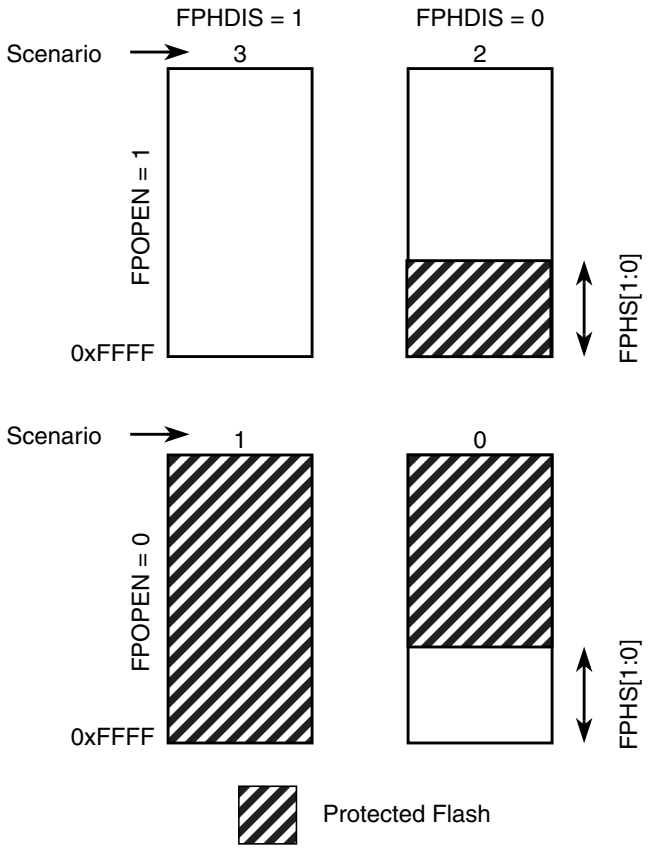


**Figure 17-9. Flash Protection Scenarios**

### 17.3.2.5.1 Flash Protection Restrictions

The general guideline is that protection can only be added, not removed. All valid transitions between Flash protection scenarios are specified in Table 17-11. Any attempt to write an invalid scenario to the FPROT register will be ignored and the FPROT register will remain unchanged. The contents of the FPROT register reflect the active protection scenario.

**Table 17-11. Flash Protection Scenario Transitions**

| From Protection Scenario | To Protection Scenario[1] | | | |
|---|---|---|---|---|
| | 0 | 1 | 2 | 3 |
| 0 | X | X | | |
| 1 | | X | | |
| 2 | | X | X | |

**Table 17-11. Flash Protection Scenario Transitions**

| From Protection Scenario | To Protection Scenario[1] | | | |
|---|---|---|---|---|
| | 0 | 1 | 2 | 3 |
| 3 | X | X | X | X |

1. Allowed transitions marked with X.

### 17.3.2.6 Flash Status Register (FSTAT)

The FSTAT register defines the status of the Flash command controller and the results of command execution.

Module Base + 0x0005

| | 7 | 6 | 5 | 4 | 3 | 2 | 1 | 0 |
|---|---|---|---|---|---|---|---|---|
| R | CBEIF | CCIF | PVIOL | ACCERR | 0 | BLANK | FAIL | DONE |
| W | | | | | | | | |
| Reset | 1 | 1 | 0 | 0 | 0 | 0 | 0 | 1 |

= Unimplemented or Reserved

**Figure 17-10. Flash Status Register (FSTAT)**

In normal modes, bits CBEIF, PVIOL, and ACCERR are readable and writable, bits CCIF and BLANK are readable and not writable, remaining bits, including FAIL and DONE, read 0 and are not writable. In special modes, FAIL is readable and writable while DONE is readable but not writable. FAIL must be clear in special modes when starting a command write sequence.

**Table 17-12. FSTAT Field Descriptions**

| Field | Description |
|---|---|
| 7<br>CBEIF | **Command Buffer Empty Interrupt Flag** — The CBEIF flag indicates that the address, data and command buffers are empty so that a new command write sequence can be started. The CBEIF flag is cleared by writing a 1 to CBEIF. Writing a 0 to the CBEIF flag has no effect on CBEIF. Writing a 0 to CBEIF after writing an aligned word to the Flash address space but before CBEIF is cleared will abort a command write sequence and cause the ACCERR flag in the FSTAT register to be set. Writing a 0 to CBEIF outside of a command write sequence will not set the ACCERR flag. The CBEIF flag is used together with the CBEIE bit in the FCNFG register to generate an interrupt request (see Figure 17-26).<br>0 Buffers are full<br>1 Buffers are ready to accept a new command |
| 6<br>CCIF | **Command Complete Interrupt Flag** — The CCIF flag indicates that there are no more commands pending. The CCIF flag is cleared when CBEIF is clear and sets automatically upon completion of all active and pending commands. The CCIF flag does not set when an active commands completes and a pending command is fetched from the command buffer. Writing to the CCIF flag has no effect. The CCIF flag is used together with the CCIE bit in the FCNFG register to generate an interrupt request (see Figure 17-26).<br>0 Command in progress<br>1 All commands are completed |

**Table 17-12. FSTAT Field Descriptions**

| Field | Description |
|---|---|
| 5<br>PVIOL | **Protection Violation** — The PVIOL flag indicates an attempt was made to program or erase an address in a protected Flash array memory area. The PVIOL flag is cleared by writing a 1 to PVIOL. Writing a 0 to the PVIOL flag has no effect on PVIOL. While PVIOL is set, it is not possible to launch another command.<br>0 No protection violation detected<br>1 Protection violation has occurred |
| 4<br>ACCERR | **Access Error** — The ACCERR flag indicates an illegal access to the Flash array caused by either a violation of the command write sequence, issuing an illegal command (illegal combination of the CMDBx bits in the FCMD register) or the execution of a CPU STOP instruction while a command is executing (CCIF=0). The ACCERR flag is cleared by writing a 1 to ACCERR. Writing a 0 to the ACCERR flag has no effect on ACCERR. While ACCERR is set, it is not possible to launch another command.<br>0 No access error detected<br>1 Access error has occurred |
| 2<br>BLANK | **Flash Array Has Been Verified as Erased** — The BLANK flag indicates that an erase verify command has checked the Flash array and found it to be erased. The BLANK flag is cleared by hardware when CBEIF is cleared as part of a new valid command write sequence. Writing to the BLANK flag has no effect on BLANK.<br>0 If an erase verify command has been requested, and the CCIF flag is set, then a 0 in BLANK indicates the array is not erased<br>1 Flash array verifies as erased |
| 1<br>FAIL | **Flag Indicating a Failed Flash Operation** — In special modes, the FAIL flag will set if the erase verify operation fails (Flash array verified as not erased). Writing a 0 to the FAIL flag has no effect on FAIL. The FAIL flag is cleared by writing a 1 to FAIL. While FAIL is set, it is not possible to launch another command.<br>0 Flash operation completed without error<br>1 Flash operation failed |
| 0<br>DONE | **Flag Indicating a Failed Operation is not Active** — In special modes, the DONE flag will clear if a program, erase, or erase verify operation is active.<br>0 Flash operation is active<br>1 Flash operation is not active |

### 17.3.2.7 Flash Command Register (FCMD)

The FCMD register defines the Flash commands.

Module Base + 0x0006

| | 7 | 6 | 5 | 4 | 3 | 2 | 1 | 0 |
|---|---|---|---|---|---|---|---|---|
| R | 0 | CMDB6 | CMDB5 | 0 | 0 | CMDB2 | 0 | CMDB0 |
| W | | | | | | | | |
| Reset | 0 | 0 | 0 | 0 | 0 | 0 | 0 | 0 |

= Unimplemented or Reserved

**Figure 17-11. Flash Command Register (FCMD)**

Bits CMDB6, CMDB5, CMDB2, and CMDB0 are readable and writable during a command write sequence while bits 7, 4, 3, and 1 read 0 and are not writable.

**Table 17-13. FCMD Field Descriptions**

| Field | Description |
|---|---|
| 6, 5, 2, 0<br>CMDB[6:5]<br>CMDB[2]<br>CMDB[0] | Valid Flash commands are shown in Table 17-14. An attempt to execute any command other than those listed in Table 17-14 will set the ACCERR bit in the FSTAT register (see Section 17.3.2.6). |

**Table 17-14. Valid Flash Command List**

| CMDB | NVM Command |
|---|---|
| 0x05 | Erase verify |
| 0x20 | Word program |
| 0x40 | Sector erase |
| 0x41 | Mass erase |

### 17.3.2.8 RESERVED2

This register is reserved for factory testing and is not accessible to the user.

Module Base + 0x0007

| | 7 | 6 | 5 | 4 | 3 | 2 | 1 | 0 |
|---|---|---|---|---|---|---|---|---|
| R | 0 | 0 | 0 | 0 | 0 | 0 | 0 | 0 |
| W | | | | | | | | |
| Reset | 0 | 0 | 0 | 0 | 0 | 0 | 0 | 0 |

= Unimplemented or Reserved

**Figure 17-12. RESERVED2**

All bits read 0 and are not writable.

### 17.3.2.9 Flash Address Register (FADDR)

FADDRHI and FADDRLO are the Flash address registers.

Module Base + 0x0008

| | 7 | 6 | 5 | 4 | 3 | 2 | 1 | 0 |
|---|---|---|---|---|---|---|---|---|
| R | 0 | 0 | 0 | FABHI | | | | |
| W | | | | | | | | |
| Reset | 0 | 0 | 0 | 0 | 0 | 0 | 0 | 0 |

= Unimplemented or Reserved

**Figure 17-13. Flash Address High Register (FADDRHI)**

Module Base + 0x0009

| | 7 | 6 | 5 | 4 | 3 | 2 | 1 | 0 |
|---|---|---|---|---|---|---|---|---|
| R<br>W | FABLO | | | | | | | |
| Reset | 0 | 0 | 0 | 0 | 0 | 0 | 0 | 0 |

**Figure 17-14. Flash Address Low Register (FADDRLO)**

In normal modes, all FABHI and FABLO bits read 0 and are not writable. In special modes, the FABHI and FABLO bits are readable and writable. For sector erase, the MCU address bits [8:0] are ignored. For mass erase, any address within the Flash array is valid to start the command.

### 17.3.2.10 Flash Data Register (FDATA)

FDATAHI and FDATALO are the Flash data registers.

Module Base + 0x000A

| | 7 | 6 | 5 | 4 | 3 | 2 | 1 | 0 |
|---|---|---|---|---|---|---|---|---|
| R<br>W | FDHI | | | | | | | |
| Reset | 0 | 0 | 0 | 0 | 0 | 0 | 0 | 0 |

**Figure 17-15. Flash Data High Register (FDATAHI)**

Module Base + 0x000B

| | 7 | 6 | 5 | 4 | 3 | 2 | 1 | 0 |
|---|---|---|---|---|---|---|---|---|
| R<br>W | FDLO | | | | | | | |
| Reset | 0 | 0 | 0 | 0 | 0 | 0 | 0 | 0 |

**Figure 17-16. Flash Data Low Register (FDATALO)**

In normal modes, all FDATAHI and FDATALO bits read 0 and are not writable. In special modes, all FDATAHI and FDATALO bits are readable and writable when writing to an address within the Flash address range.

### 17.3.2.11 RESERVED3

This register is reserved for factory testing and is not accessible to the user.

Module Base + 0x000C

| | 7 | 6 | 5 | 4 | 3 | 2 | 1 | 0 |
|---|---|---|---|---|---|---|---|---|
| R | 0 | 0 | 0 | 0 | 0 | 0 | 0 | 0 |
| W | | | | | | | | |
| Reset | 0 | 0 | 0 | 0 | 0 | 0 | 0 | 0 |

= Unimplemented or Reserved

**Figure 17-17. RESERVED3**

All bits read 0 and are not writable.

### 17.3.2.12 RESERVED4

This register is reserved for factory testing and is not accessible to the user.

Module Base + 0x000D

| | 7 | 6 | 5 | 4 | 3 | 2 | 1 | 0 |
|---|---|---|---|---|---|---|---|---|
| R | 0 | 0 | 0 | 0 | 0 | 0 | 0 | 0 |
| W | | | | | | | | |
| Reset | 0 | 0 | 0 | 0 | 0 | 0 | 0 | 0 |

= Unimplemented or Reserved

**Figure 17-18. RESERVED4**

All bits read 0 and are not writable.

### 17.3.2.13 RESERVED5

This register is reserved for factory testing and is not accessible to the user.

Module Base + 0x000E

| | 7 | 6 | 5 | 4 | 3 | 2 | 1 | 0 |
|---|---|---|---|---|---|---|---|---|
| R | 0 | 0 | 0 | 0 | 0 | 0 | 0 | 0 |
| W | | | | | | | | |
| Reset | 0 | 0 | 0 | 0 | 0 | 0 | 0 | 0 |

= Unimplemented or Reserved

**Figure 17-19. RESERVED5**

All bits read 0 and are not writable.

### 17.3.2.14 RESERVED6

This register is reserved for factory testing and is not accessible to the user.

Module Base + 0x000F

| | 7 | 6 | 5 | 4 | 3 | 2 | 1 | 0 |
|---|---|---|---|---|---|---|---|---|
| R | 0 | 0 | 0 | 0 | 0 | 0 | 0 | 0 |
| W | | | | | | | | |
| Reset | 0 | 0 | 0 | 0 | 0 | 0 | 0 | 0 |

= Unimplemented or Reserved

**Figure 17-20. RESERVED6**

All bits read 0 and are not writable.

## 17.4 Functional Description

### 17.4.1 Flash Command Operations

Write operations are used for the program, erase, and erase verify algorithms described in this section. The program and erase algorithms are controlled by a state machine whose timebase FCLK is derived from the oscillator clock via a programmable divider. The FCMD register as well as the associated FADDR and FDATA registers operate as a buffer and a register (2-stage FIFO) so that a new command along with the necessary data and address can be stored to the buffer while the previous command is still in progress. This pipelined operation allows a time optimization when programming more than one word on a specific row, as the high voltage generation can be kept active in between two programming commands. The pipelined operation also allows a simplification of command launching. Buffer empty as well as command completion are signalled by flags in the FSTAT register with corresponding interrupts generated, if enabled.

The next sections describe:

- How to write the FCLKDIV register
- Command write sequence used to program, erase or erase verify the Flash array
- Valid Flash commands
- Errors resulting from illegal Flash operations

#### 17.4.1.1 Writing the FCLKDIV Register

Prior to issuing any Flash command after a reset, it is first necessary to write the FCLKDIV register to divide the oscillator clock down to within the 150-kHz to 200-kHz range. Since the program and erase timings are also a function of the bus clock, the FCLKDIV determination must take this information into account.

If we define:

- FCLK as the clock of the Flash timing control block
- Tbus as the period of the bus clock
- INT(x) as taking the integer part of x (e.g., INT(4.323) = 4),

then FCLKDIV register bits PRDIV8 and FDIV[5:0] are to be set as described in Figure 17-21.

For example, if the oscillator clock frequency is 950 kHz and the bus clock is 10 MHz, FCLKDIV bits FDIV[5:0] should be set to 4 (000100) and bit PRDIV8 set to 0. The resulting FCLK is then 190 kHz. As a result, the Flash algorithm timings are increased over optimum target by:

$$(200 - 190) / 200 \times 100 = 5\%$$

Command execution time will increase proportionally with the period of FCLK.

**CAUTION**

Because of the impact of clock synchronization on the accuracy of the functional timings, programming or erasing the Flash array cannot be performed if the bus clock runs at less than 1 MHz. Programming or erasing the Flash array with an input clock < 150 kHz should be avoided. Setting FCLKDIV to a value such that FCLK < 150 kHz can destroy the Flash array due to overstress. Setting FCLKDIV to a value such that (1/FCLK + Tbus) < 5µs can result in incomplete programming or erasure of the Flash array cells.

If the FCLKDIV register is written, the bit FDIVLD is set automatically. If the FDIVLD bit is 0, the FCLKDIV register has not been written since the last reset. If the FCLKDIV register has not been written to, the Flash command loaded during a command write sequence will not execute and the ACCERR flag in the FSTAT register will set.

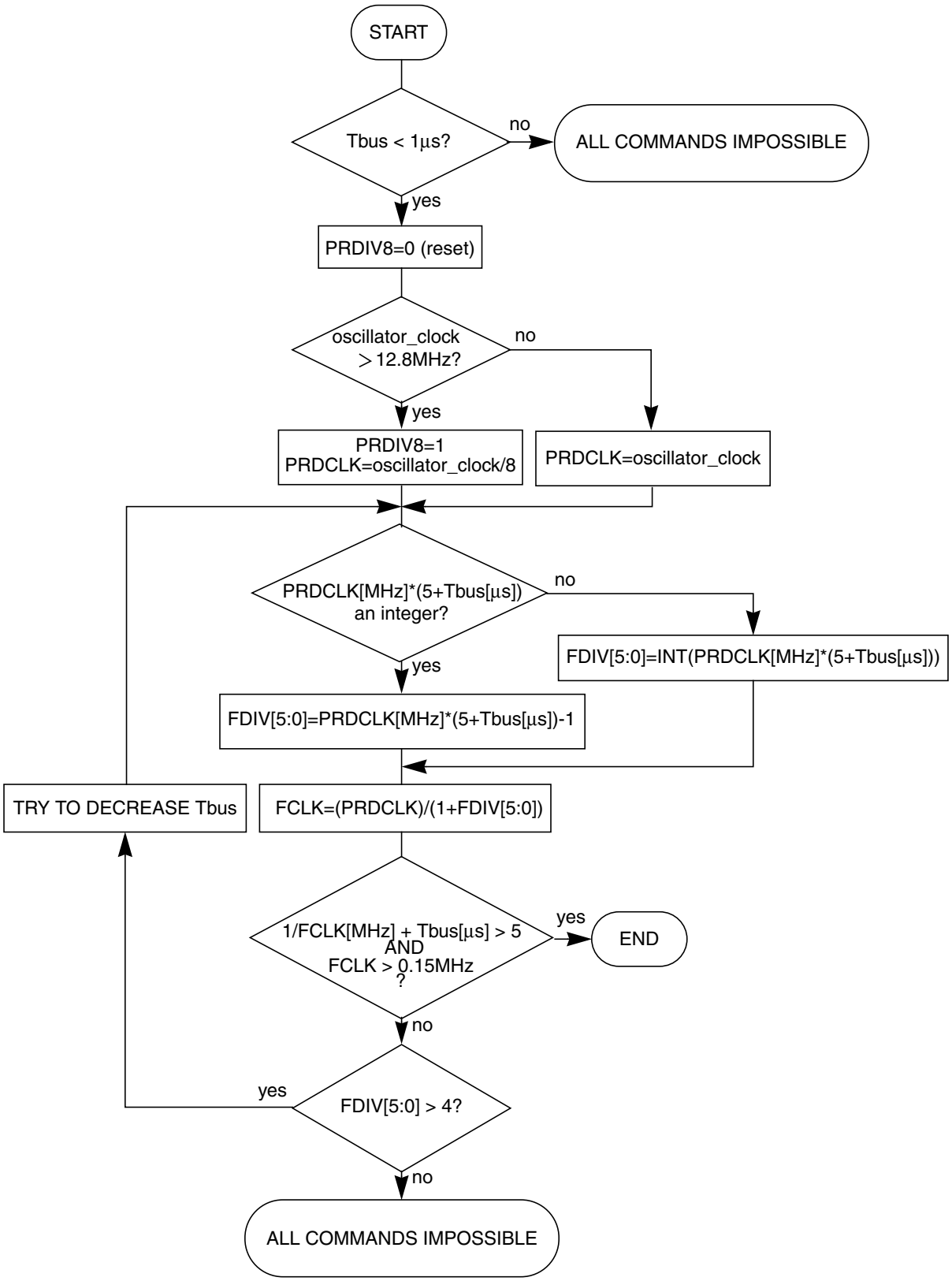


**Figure 17-21. PRDIV8 and FDIV Bits Determination Procedure**

#### 17.4.1.2 Command Write Sequence

The Flash command controller is used to supervise the command write sequence to execute program, erase, and erase verify algorithms.

Before starting a command write sequence, the ACCERR and PVIOL flags in the FSTAT register must be clear and the CBEIF flag should be tested to determine the state of the address, data, and command buffers. If the CBEIF flag is set, indicating the buffers are empty, a new command write sequence can be started. If the CBEIF flag is clear, indicating the buffers are not available, a new command write sequence will overwrite the contents of the address, data, and command buffers.

A command write sequence consists of three steps which must be strictly adhered to with writes to the Flash module not permitted between the steps. However, Flash register and array reads are allowed during a command write sequence. The basic command write sequence is as follows:

1. Write to a valid address in the Flash array memory.
2. Write a valid command to the FCMD register.
3. Clear the CBEIF flag in the FSTAT register by writing a 1 to CBEIF to launch the command.

The address written in step 1 will be stored in the FADDR registers and the data will be stored in the FDATA registers. When the CBEIF flag is cleared in step 3, the CCIF flag is cleared by the Flash command controller indicating that the command was successfully launched. For all command write sequences, the CBEIF flag will set after the CCIF flag is cleared indicating that the address, data, and command buffers are ready for a new command write sequence to begin. A buffered command will wait for the active operation to be completed before being launched. Once a command is launched, the completion of the command operation is indicated by the setting of the CCIF flag in the FSTAT register. The CCIF flag will set upon completion of all active and buffered commands.

#### 17.4.1.3 Valid Flash Commands

Table 17-15 summarizes the valid Flash commands along with the effects of the commands on the Flash array.

**Table 17-15. Valid Flash Commands**

| FCMD | Meaning | Function on Flash Array |
|---|---|---|
| 0x05 | Erase Verify | Verify all bytes in the Flash array are erased.<br>If the Flash array is erased, the BLANK bit will set in the FSTAT register upon command completion. |
| 0x20 | Program | Program a word (2 bytes) in the Flash array. |
| 0x40 | Sector Erase | Erase all 512 bytes in a sector of the Flash array. |
| 0x41 | Mass Erase | Erase all bytes in the Flash array.<br>A mass erase of the full Flash array is only possible when FPHDIS and FPOPEN bits in the FPROT register are set prior to launching the command. |

**CAUTION**

A Flash word must be in the erased state before being programmed. Cumulative programming of bits within a Flash word is not allowed.

#### 17.4.1.3.1 Erase Verify Command

The erase verify operation will verify that a Flash array is erased.

An example flow to execute the erase verify operation is shown in Figure 17-22. The erase verify command write sequence is as follows:

1. Write to a Flash array address to start the command write sequence for the erase verify command. The address and data written will be ignored.
2. Write the erase verify command, 0x05, to the FCMD register.
3. Clear the CBEIF flag in the FSTAT register by writing a 1 to CBEIF to launch the erase verify command.

After launching the erase verify command, the CCIF flag in the FSTAT register will set after the operation has completed unless a new command write sequence has been buffered. Upon completion of the erase verify operation, the BLANK flag in the FSTAT register will be set if all addresses in the Flash array are verified to be erased. If any address in the Flash array is not erased, the erase verify operation will terminate and the BLANK flag in the FSTAT register will remain clear.

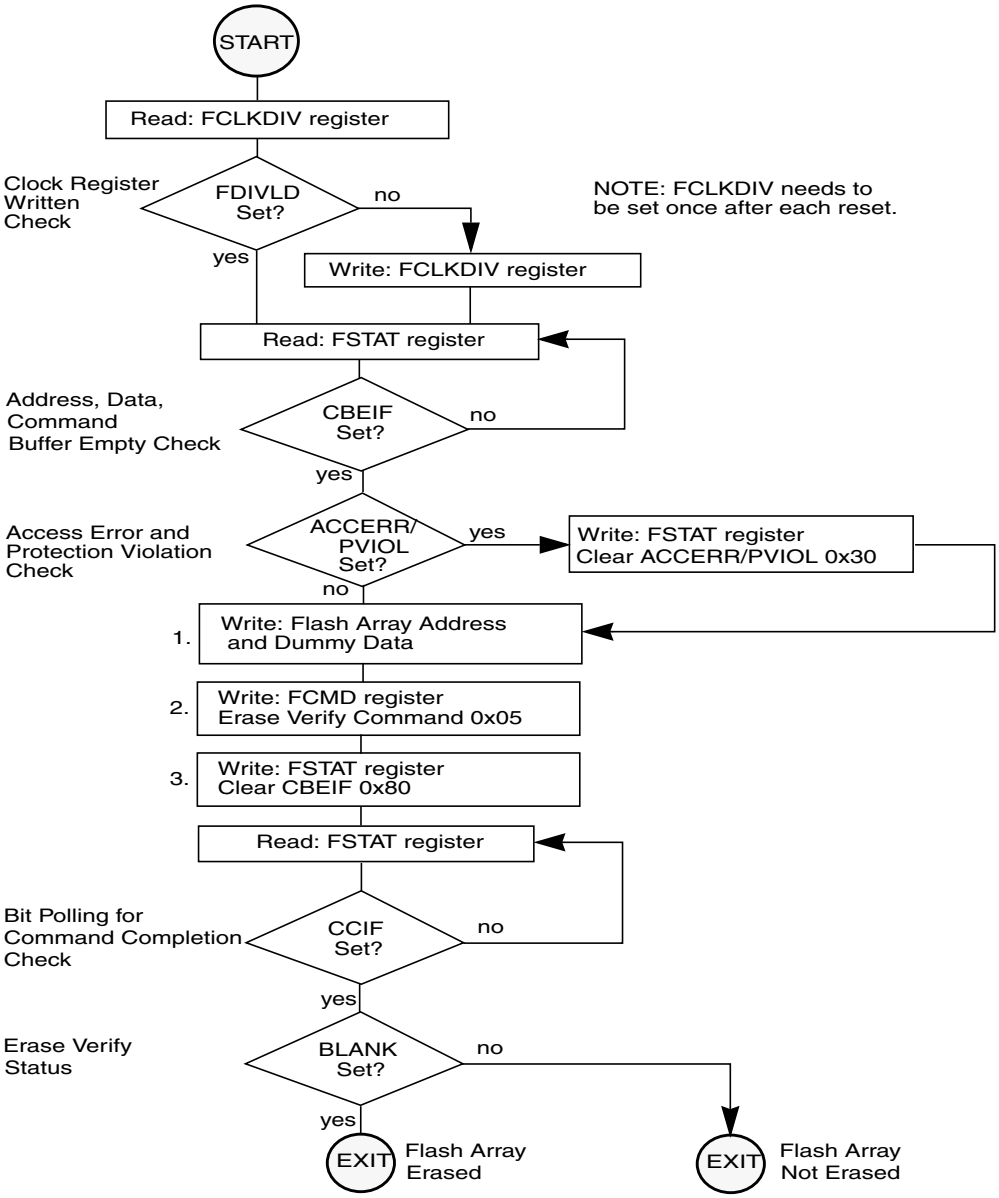


**Figure 17-22. Example Erase Verify Command Flow**

#### 17.4.1.3.2 Program Command

The program operation will program a previously erased word in the Flash array using an embedded algorithm.

An example flow to execute the program operation is shown in Figure 17-23. The program command write sequence is as follows:

1. Write to a Flash array address to start the command write sequence for the program command. The data written will be programmed to the Flash array address written.
2. Write the program command, 0x20, to the FCMD register.
3. Clear the CBEIF flag in the FSTAT register by writing a 1 to CBEIF to launch the program command.

If a word to be programmed is in a protected area of the Flash array, the PVIOL flag in the FSTAT register will set and the program command will not launch. Once the program command has successfully launched, the CCIF flag in the FSTAT register will set after the program operation has completed unless a new command write sequence has been buffered. By executing a new program command write sequence on sequential words after the CBEIF flag in the FSTAT register has been set, up to 55% faster programming time per word can be effectively achieved than by waiting for the CCIF flag to set after each program operation.

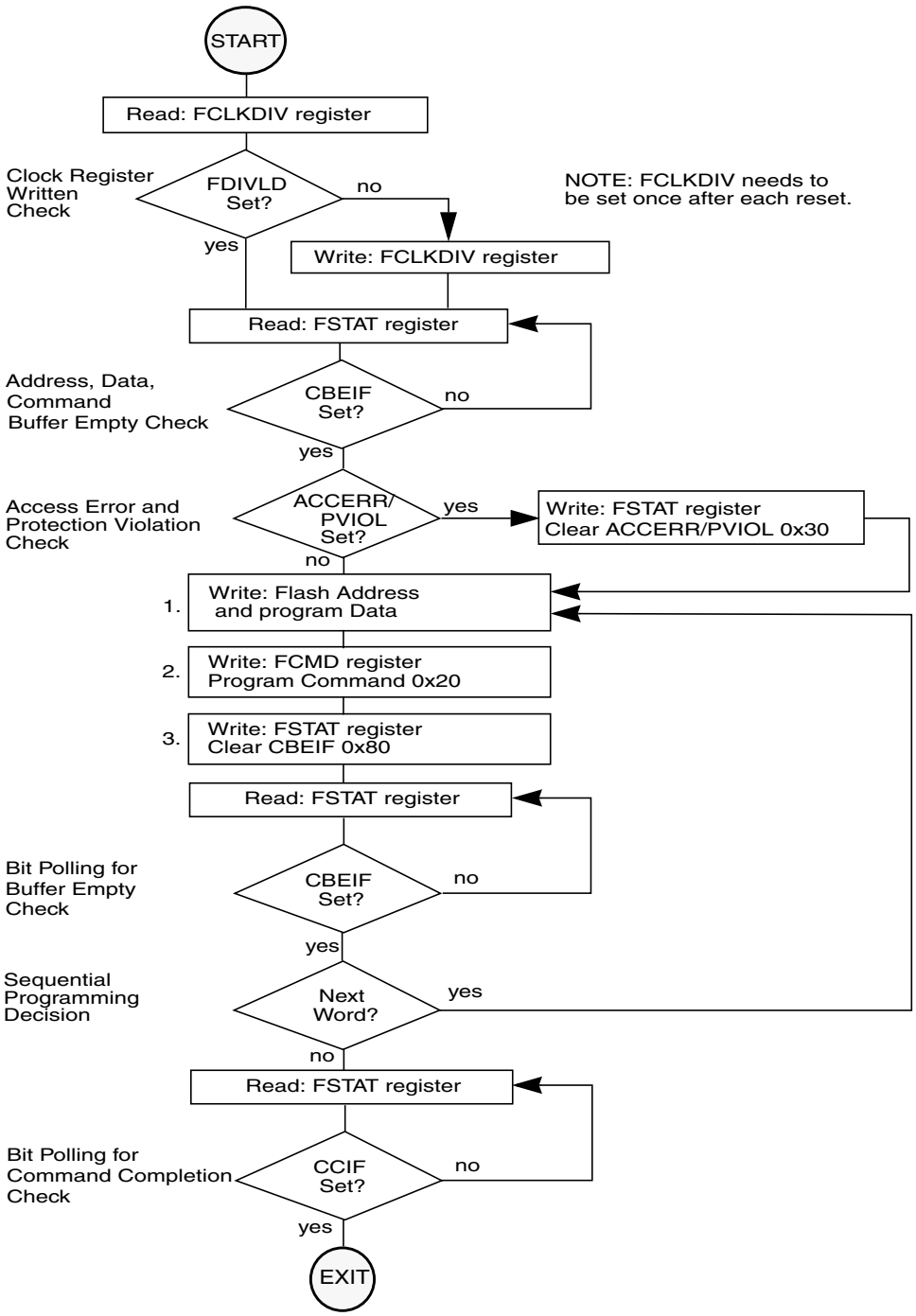


**Figure 17-23. Example Program Command Flow**

#### 17.4.1.3.3 Sector Erase Command

The sector erase operation will erase all addresses in a 512 byte sector of the Flash array using an embedded algorithm.

An example flow to execute the sector erase operation is shown in Figure 17-24. The sector erase command write sequence is as follows:

1. Write to a Flash array address to start the command write sequence for the sector erase command. The Flash address written determines the sector to be erased while MCU address bits [8:0] and the data written are ignored.
2. Write the sector erase command, 0x40, to the FCMD register.
3. Clear the CBEIF flag in the FSTAT register by writing a 1 to CBEIF to launch the sector erase command.

If a Flash sector to be erased is in a protected area of the Flash array, the PVIOL flag in the FSTAT register will set and the sector erase command will not launch. Once the sector erase command has successfully launched, the CCIF flag in the FSTAT register will set after the sector erase operation has completed unless a new command write sequence has been buffered.

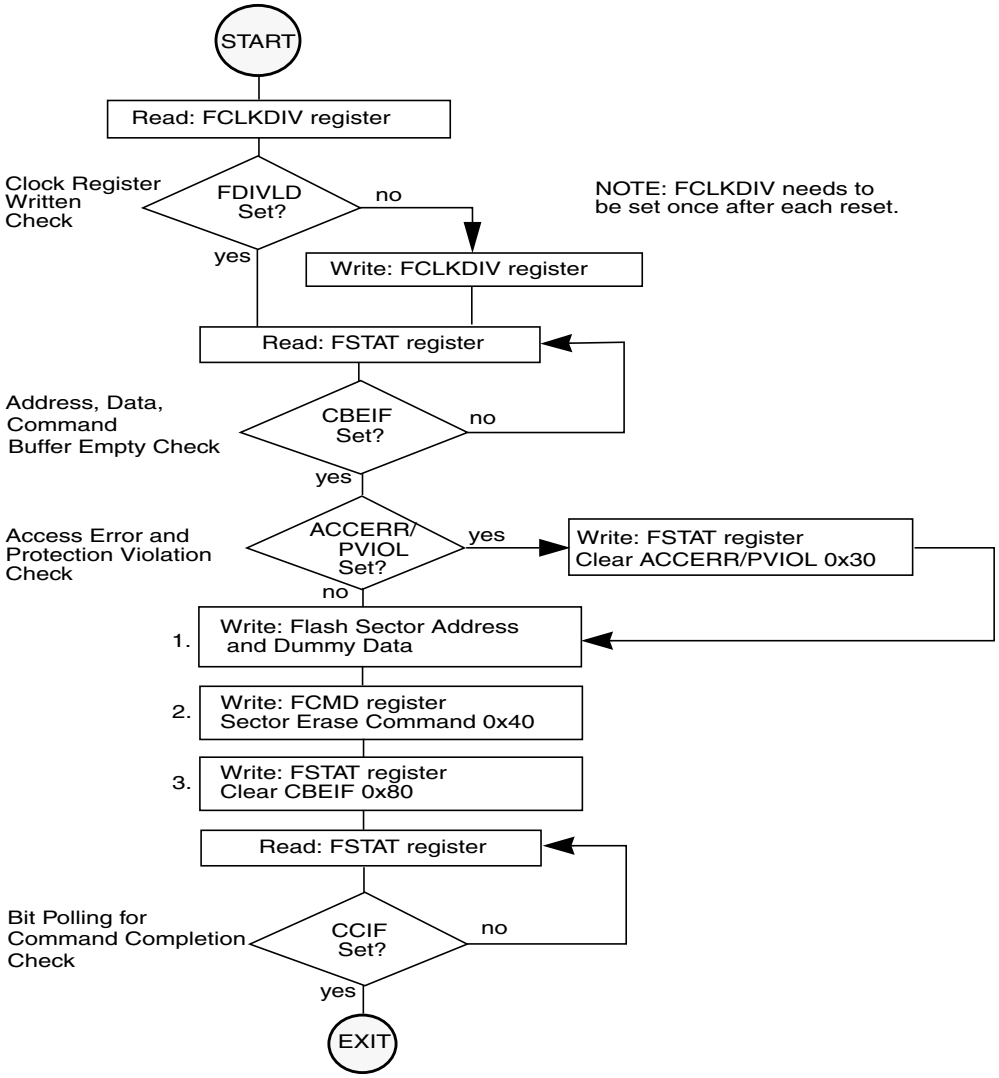


**Figure 17-24. Example Sector Erase Command Flow**

#### 17.4.1.3.4 Mass Erase Command

The mass erase operation will erase all addresses in a Flash array using an embedded algorithm.

An example flow to execute the mass erase operation is shown in Figure 17-25. The mass erase command write sequence is as follows:

1. Write to a Flash array address to start the command write sequence for the mass erase command. The address and data written will be ignored.
2. Write the mass erase command, 0x41, to the FCMD register.
3. Clear the CBEIF flag in the FSTAT register by writing a 1 to CBEIF to launch the mass erase command.

If a Flash array to be erased contains any protected area, the PVIOL flag in the FSTAT register will set and the mass erase command will not launch. Once the mass erase command has successfully launched, the CCIF flag in the FSTAT register will set after the mass erase operation has completed unless a new command write sequence has been buffered.

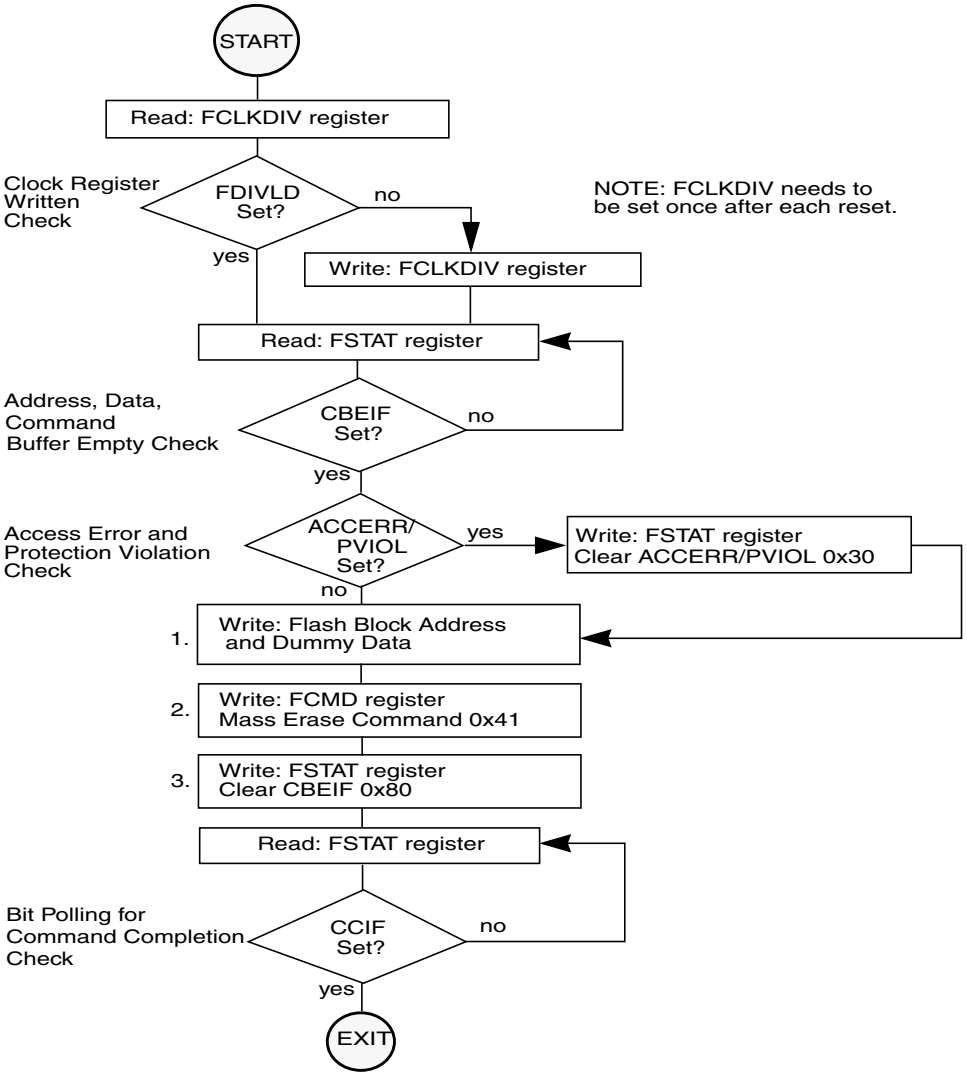


**Figure 17-25. Example Mass Erase Command Flow**

#### 17.4.1.4 Illegal Flash Operations

##### 17.4.1.4.1 Access Error

The ACCERR flag in the FSTAT register will be set during the command write sequence if any of the following illegal Flash operations are performed causing the command write sequence to immediately abort:

1. Writing to the Flash address space before initializing the FCLKDIV register
2. Writing a misaligned word or a byte to the valid Flash address space
3. Writing to the Flash address space while CBEIF is not set
4. Writing a second word to the Flash address space before executing a program or erase command on the previously written word
5. Writing to any Flash register other than FCMD after writing a word to the Flash address space
6. Writing a second command to the FCMD register before executing the previously written command
7. Writing an invalid command to the FCMD register
8. Writing to any Flash register other than FSTAT (to clear CBEIF) after writing to the FCMD register
9. The part enters stop mode and a program or erase command is in progress. The command is aborted and any pending command is killed
10. When security is enabled, a command other than mass erase originating from a non-secure memory or from the background debug mode is written to the FCMD register
11. A 0 is written to the CBEIF bit in the FSTAT register to abort a command write sequence.

The ACCERR flag will not be set if any Flash register is read during the command write sequence. If the Flash array is read during execution of an algorithm (CCIF=0), the Flash module will return invalid data and the ACCERR flag will not be set. If an ACCERR flag is set in the FSTAT register, the Flash command controller is locked. It is not possible to launch another command until the ACCERR flag is cleared.

##### 17.4.1.4.2 Protection Violation

The PVIOL flag in the FSTAT register will be set during the command write sequence after the word write to the Flash address space if any of the following illegal Flash operations are performed, causing the command write sequence to immediately abort:

1. Writing a Flash address to program in a protected area of the Flash array (see Section 17.3.2.5).
2. Writing a Flash address to erase in a protected area of the Flash array.
3. Writing the mass erase command to the FCMD register while any protection is enabled.

If the PVIOL flag is set, the Flash command controller is locked. It is not possible to launch another command until the PVIOL flag is cleared.

## 17.4.2 Operating Modes

### 17.4.2.1 Wait Mode

If the MCU enters wait mode while a Flash command is active (CCIF = 0), that command and any buffered command will be completed.

The Flash module can recover the MCU from wait mode if the interrupts are enabled (see Section 17.4.5).

### 17.4.2.2 Stop Mode

If the MCU enters stop mode while a Flash command is active (CCIF = 0), that command will be aborted and the data being programmed or erased is lost. The high voltage circuitry to the Flash array will be switched off when entering stop mode. CCIF and ACCERR flags will be set. Upon exit from stop mode, the CBEIF flag will be set and any buffered command will not be executed. The ACCERR flag must be cleared before returning to normal operation.

**NOTE**

As active Flash commands are immediately aborted when the MCU enters stop mode, it is strongly recommended that the user does not use the STOP instruction during program and erase execution.

### 17.4.2.3 Background Debug Mode

In background debug mode (BDM), the FPROT register is writable. If the MCU is unsecured, then all Flash commands listed in Table 17-15 can be executed. If the MCU is secured and is in special single chip mode, the only possible command to execute is mass erase.

## 17.4.3 Flash Module Security

The Flash module provides the necessary security information to the MCU. After each reset, the Flash module determines the security state of the MCU as defined in Section 17.3.2.2, “Flash Security Register (FSEC)”.

The contents of the Flash security/options byte at address 0xFF0F in the Flash configuration field must be changed directly by programming address 0xFF0F when the device is unsecured and the higher address sector is unprotected. If the Flash security/options byte is left in the secure state, any reset will cause the MCU to return to the secure operating mode.

### 17.4.3.1 Unsecuring the MCU using Backdoor Key Access

The MCU may only be unsecured by using the backdoor key access feature which requires knowledge of the contents of the backdoor key (four 16-bit words programmed at addresses 0xFF00–0xFF07). If KEYEN[1:0] = 1:0 and the KEYACC bit is set, a write to a backdoor key address in the Flash array triggers a comparison between the written data and the backdoor key data stored in the Flash array. If all four words of data are written to the correct addresses in the correct order and the data matches the backdoor key stored in the Flash array, the MCU will be unsecured. The data must be written to the backdoor key

addresses sequentially staring with 0xFF00-0xFF01 and ending with 0xFF06–0xFF07. The values 0x0000 and 0xFFFF are not permitted as keys. When the KEYACC bit is set, reads of the Flash array will return invalid data.

The user code stored in the Flash array must have a method of receiving the backdoor key from an external stimulus. This external stimulus would typically be through one of the on-chip serial ports.

If KEYEN[1:0] = 1:0 in the FSEC register, the MCU can be unsecured by the backdoor key access sequence described below:

1. Set the KEYACC bit in the FCNFG register
2. Write the correct four 16-bit words to Flash addresses 0xFF00–0xFF07 sequentially starting with 0xFF00
3. Clear the KEYACC bit in the FCNFG register
4. If all four 16-bit words match the backdoor key stored in Flash addresses 0xFF00–0xFF07, the MCU is unsecured and bits SEC[1:0] in the FSEC register are forced to the unsecure state of 1:0

The backdoor key access sequence is monitored by the internal security state machine. An illegal operation during the backdoor key access sequence will cause the security state machine to lock, leaving the MCU in the secured state. A reset of the MCU will cause the security state machine to exit the lock state and allow a new backdoor key access sequence to be attempted. The following illegal operations will lock the security state machine:

1. If any of the four 16-bit words does not match the backdoor key programmed in the Flash array
2. If the four 16-bit words are written in the wrong sequence
3. If more than four 16-bit words are written
4. If any of the four 16-bit words written are 0x0000 or 0xFFFF
5. If the KEYACC bit does not remain set while the four 16-bit words are written

After the backdoor key access sequence has been correctly matched, the MCU will be unsecured. The Flash security byte can be programmed to the unsecure state, if desired.

In the unsecure state, the user has full control of the contents of the four word backdoor key by programming bytes 0xFF00–0xFF07 of the Flash configuration field.

The security as defined in the Flash security/options byte at address 0xFF0F is not changed by using the backdoor key access sequence to unsecure. The backdoor key stored in addresses 0xFF00–0xFF07 is unaffected by the backdoor key access sequence. After the next reset sequence, the security state of the Flash module is determined by the Flash security/options byte at address 0xFF0F. The backdoor key access sequence has no effect on the program and erase protection defined in the FPROT register.

It is not possible to unsecure the MCU in special single chip mode by executing the backdoor key access sequence in background debug mode.

### 17.4.4 Flash Reset Sequence

On each reset, the Flash module executes a reset sequence to hold CPU activity while loading the following registers from the Flash array memory according to Table 17-1:

- FPROT — Flash Protection Register (see Section 17.3.2.5)
- FSEC — Flash Security Register (see Section 17.3.2.2)

#### 17.4.4.1 Reset While Flash Command Active

If a reset occurs while any Flash command is in progress, that command will be immediately aborted. The state of the word being programmed or the sector/array being erased is not guaranteed.

### 17.4.5 Interrupts

The Flash module can generate an interrupt when all Flash commands have completed execution or the Flash address, data, and command buffers are empty.

**Table 17-16. Flash Interrupt Sources**

| Interrupt Source | Interrupt Flag | Local Enable | Global (CCR) Mask |
|---|---|---|---|
| Flash Address, Data, and Command Buffers are empty | CBEIF (FSTAT register) | CBEIE | I Bit |
| All Flash commands have completed execution | CCIF (FSTAT register) | CCIE | I Bit |

**NOTE**

Vector addresses and their relative interrupt priority are determined at the MCU level.

#### 17.4.5.1 Description of Interrupt Operation

Figure 17-26 shows the logic used for generating interrupts.

The Flash module uses the CBEIF and CCIF flags in combination with the enable bits CBIE and CCIE to discriminate for the generation of interrupts.

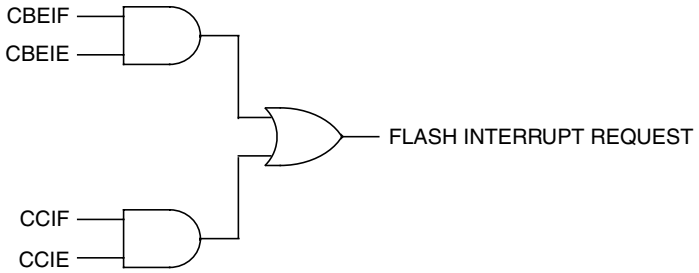


**Figure 17-26. Flash Interrupt Implementation**

For a detailed description of these register bits, refer to Section 17.3.2.4, “Flash Configuration Register (FCNFG)” and Section 17.3.2.6, “Flash Status Register (FSTAT)”.

# Chapter 18
# 32 Kbyte Flash Module (S12FTS32KV1)

## 18.1 Introduction

The FTS32K module implements a 32 Kbyte Flash (nonvolatile) memory. The Flash memory contains one array of 32 Kbytes organized as 512 rows of 64 bytes with an erase sector size of eight rows (512 bytes). The Flash array may be read as either bytes, aligned words, or misaligned words. Read access time is one bus cycle for byte and aligned word, and two bus cycles for misaligned words.

The Flash array is ideal for program and data storage for single-supply applications allowing for field reprogramming without requiring external voltage sources for program or erase. Program and erase functions are controlled by a command driven interface. The Flash module supports both mass erase and sector erase. An erased bit reads 1 and a programmed bit reads 0. The high voltage required to program and erase is generated internally. It is not possible to read from a Flash array while it is being erased or programmed.

**CAUTION**

A Flash word must be in the erased state before being programmed.
Cumulative programming of bits within a Flash word is not allowed.

### 18.1.1 Glossary

**Command Write Sequence** — A three-step MCU instruction sequence to program, erase, or erase verify the Flash array memory.

### 18.1.2 Features

- 32 Kbytes of Flash memory comprised of one 32 Kbyte array divided into 64 sectors of 512 bytes
- Automated program and erase algorithm
- Interrupts on Flash command completion and command buffer empty
- Fast sector erase and word program operation
- 2-stage command pipeline for faster multi-word program times
- Flexible protection scheme to prevent accidental program or erase
- Single power supply for Flash program and erase operations
- Security feature to prevent unauthorized access to the Flash array memory

### 18.1.3 Modes of Operation

See Section 18.4.2, “Operating Modes” for a description of the Flash module operating modes. For program and erase operations, refer to Section 18.4.1, “Flash Command Operations”.

### 18.1.4 Block Diagram

Figure 18-1 shows a block diagram of the FTS32K module.

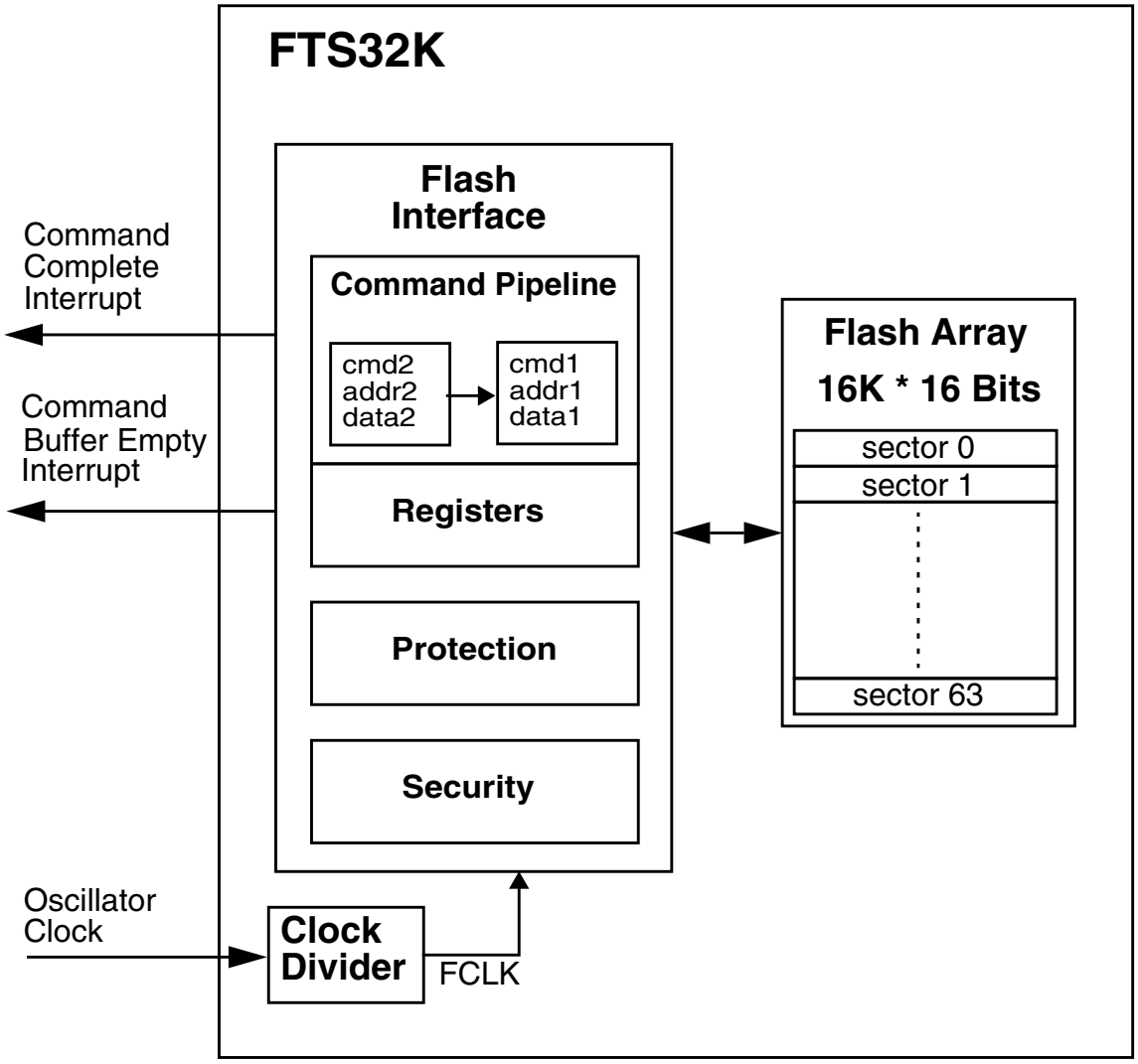


Figure 18-1. FTS32K Block Diagram

## 18.2 External Signal Description

The FTS32K module contains no signals that connect off-chip.

## 18.3 Memory Map and Registers

This section describes the FTS32K memory map and registers.

### 18.3.1 Module Memory Map

The FTS32K memory map is shown in Figure 18-2. The HCS12 architecture places the Flash array addresses between 0x4000 and 0xFFFF, which corresponds to three 16 Kbyte pages. The content of the HCS12 Core PPAGE register is used to map the logical middle page ranging from address 0x8000 to 0xBFFF to any physical 16K byte page in the Flash array memory.[1] The FPROT register (see Section 18.3.2.5) can be set to globally protect the entire Flash array. Three separate areas, one starting from the Flash array starting address (called lower) towards higher addresses, one growing downward from the Flash array end address (called higher), and the remaining addresses, can be activated for protection. The Flash array addresses covered by these protectable regions are shown in Figure 18-2. The higher address area is mainly targeted to hold the boot loader code since it covers the vector space. The lower address area can be used for EEPROM emulation in an MCU without an EEPROM module since it can be left unprotected while the remaining addresses are protected from program or erase. Default protection settings as well as security information that allows the MCU to restrict access to the Flash module are stored in the Flash configuration field described in Table 18-1.

**Table 18-1. Flash Configuration Field**

| Flash Address | Size (bytes) | Description |
|---|---|---|
| 0xFF00–0xFF07 | 8 | Backdoor Key to unlock security |
| 0xFF08–0xFF0C | 5 | Reserved |
| 0xFF0D | 1 | Flash Protection byte<br>Refer to Section 18.3.2.5, “Flash Protection Register (FPROT)” |
| 0xFF0E | 1 | Reserved |
| 0xFF0F | 1 | Flash Security/Options byte<br>Refer to Section 18.3.2.2, “Flash Security Register (FSEC)” |

1. By placing 0x3E/0x3F in the HCS12 Core PPAGE register, the bottom/top fixed 16 Kbyte pages can be seen twice in the MCU memory map.

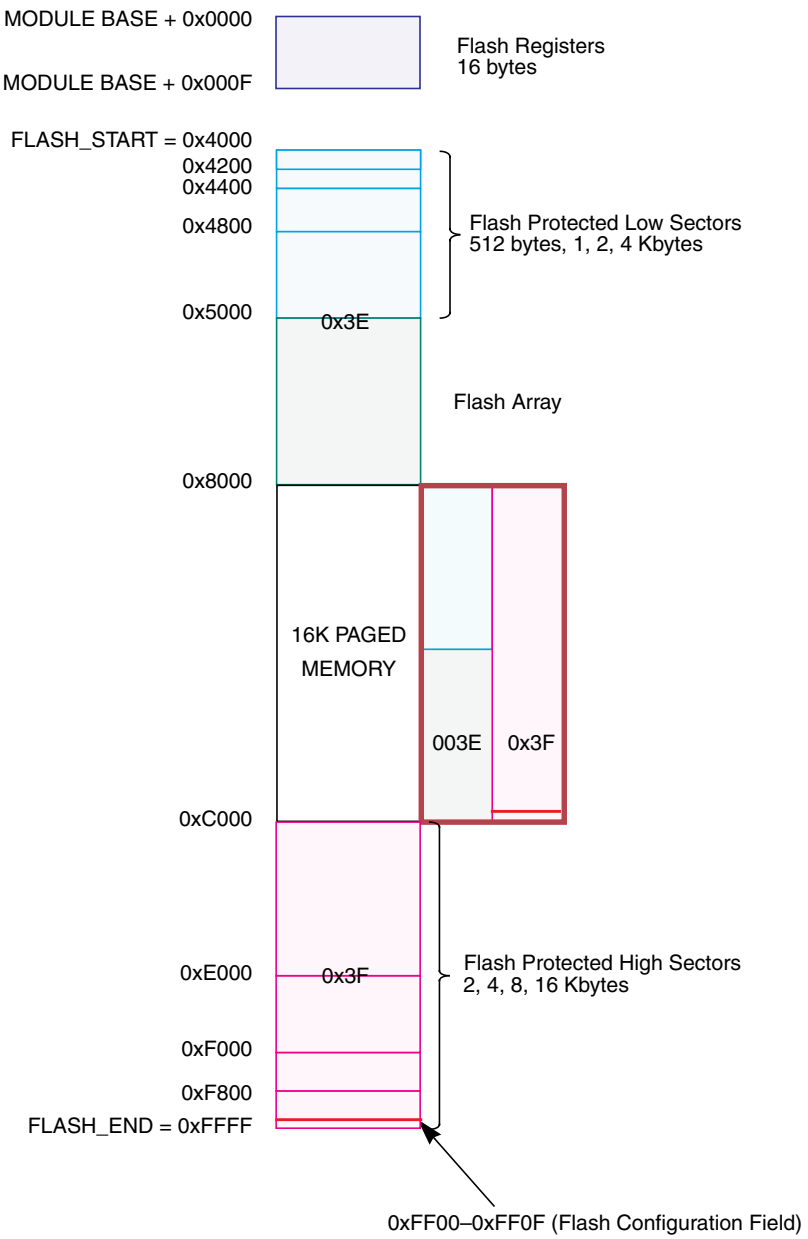


Note: 0x3E–0x3F correspond to the PPAGE register content

**Figure 18-2. Flash Memory Map**

**Table 18-2. Flash Array Memory Map Summary**

| MCU Address Range | PPAGE | Protectable Low Range | Protectable High Range | Array Relative Address[1] |
|---|---|---|---|---|
| 0x4000–0x7FFF | Unpaged (0x3E) | 0x4000–0x43FF<br>0x4000–0x47FF<br>0x4000–0x4FFF<br>0x4000–0x5FFF | N.A. | 0x18000–0x1BFFF |
| 0x8000–0xBFFF | 0x3E | 0x8000–0x83FF<br>0x8000–0x87FF<br>0x8000–0x8FFF<br>0x8000–0x9FFF | N.A. | 0x18000–0x1BFFF |
| | 0x3F | N.A. | 0xB800–0xBFFF<br>0xB000–0xBFFF<br>0xA000–0xBFFF<br>0x8000–0xBFFF | 0x1C000–0x1FFFF |
| 0xC000–0xFFFF | Unpaged (0x3F) | N.A. | 0xF800–0xFFFF<br>0xF000–0xFFFF<br>0xE000–0xFFFF<br>0xC000–0xFFFF | 0x1C000–0x1FFFF |

1. Inside Flash block.

## 18.3.2 Register Descriptions

The Flash module contains a set of 16 control and status registers located between module base + 0x0000 and 0x000F. A summary of the Flash module registers is given in Figure 18-3. Detailed descriptions of each register bit are provided.

| Register Name | | Bit 7 | 6 | 5 | 4 | 3 | 2 | 1 | Bit 0 |
|---|---|---|---|---|---|---|---|---|---|
| 0x0000 FCLKDIV | R | FDIVLD | PRDIV8 | FDIV5 | FDIV4 | FDIV3 | FDIV2 | FDIV1 | FDIV0 |
| | W | | | | | | | | |
| 0x0001 FSEC | R | KEYEN1 | KEYEN0 | NV5 | NV4 | NV3 | NV2 | SEC1 | SEC0 |
| | W | | | | | | | | |
| 0x0002 RESERVED1 (1) | R | 0 | 0 | 0 | 0 | 0 | 0 | 0 | 0 |
| | W | | | | | | | | |
| 0x0003 FCNFG | R | CBEIE | CCIE | KEYACC | 0 | 0 | 0 | 0 | 0 |
| | W | | | | | | | | |
| 0x0004 FPROT | R | FPOPEN | NV6 | FPHDIS | FPHS1 | FPHS0 | FPLDIS | FPLS1 | FPLS0 |
| | W | | | | | | | | |
| 0x0005 FSTAT | R | CBEIF | CCIF | PVIOL | ACCERR | 0 | BLANK | FAIL | DONE |
| | W | | | | | | | | |
| 0x0006 FCMD | R | 0 | CMDB6 | CMDB5 | 0 | 0 | CMDB2 | 0 | CMDB0 |
| | W | | | | | | | | |
| 0x0007 RESERVED2[1] | R | 0 | 0 | 0 | 0 | 0 | 0 | 0 | 0 |
| | W | | | | | | | | |
| 0x0008 FADDRHI[1] | R | 0 | 0 | FABHI | | | | | |
| | W | | | | | | | | |
| 0x0009 FADDRLO[1] | R | FABLO | | | | | | | |
| | W | | | | | | | | |
| 0x000A FDATAHI[1] | R | FDHI | | | | | | | |
| | W | | | | | | | | |
| 0x000B FDATALO[1] | R | FDLO | | | | | | | |
| | W | | | | | | | | |
| 0x000C RESERVED3[1] | R | 0 | 0 | 0 | 0 | 0 | 0 | 0 | 0 |
| | W | | | | | | | | |
| 0x000D RESERVED4[1] | R | 0 | 0 | 0 | 0 | 0 | 0 | 0 | 0 |
| | W | | | | | | | | |
| 0x000E RESERVED5[1] | R | 0 | 0 | 0 | 0 | 0 | 0 | 0 | 0 |
| | W | | | | | | | | |
| 0x000F RESERVED6[1] | R | 0 | 0 | 0 | 0 | 0 | 0 | 0 | 0 |
| | W | | | | | | | | |

= Unimplemented or Reserved

**Figure 18-3. Flash Register Summary**

1. Intended for factory test purposes only.

### 18.3.2.1 Flash Clock Divider Register (FCLKDIV)

The FCLKDIV register is used to control timed events in program and erase algorithms.

Module Base + 0x0000

| | 7 | 6 | 5 | 4 | 3 | 2 | 1 | 0 |
|---|---|---|---|---|---|---|---|---|
| R | FDIVLD | PRDIV8 | FDIV5 | FDIV4 | FDIV3 | FDIV2 | FDIV1 | FDIV0 |
| W | | | | | | | | |
| Reset | 0 | 0 | 0 | 0 | 0 | 0 | 0 | 0 |

= Unimplemented or Reserved

**Figure 18-4. Flash Clock Divider Register (FCLKDIV)**

All bits in the FCLKDIV register are readable, bits 6–0 are write once and bit 7 is not writable.

**Table 18-3. FCLKDIV Field Descriptions**

| Field | Description |
|---|---|
| 7<br>FDIVLD | **Clock Divider Loaded**<br>0 FCLKDIV register has not been written<br>1 FCLKDIV register has been written to since the last reset |
| 6<br>PRDIV8 | **Enable Prescalar by 8**<br>0 The oscillator clock is directly fed into the Flash clock divider<br>1 The oscillator clock is divided by 8 before feeding into the Flash clock divider |
| 5–0<br>FDIV[5:0] | **Clock Divider Bits** — The combination of PRDIV8 and FDIV[5:0] must divide the oscillator clock down to a frequency of 150 kHz – 200 kHz. The maximum divide ratio is 512. Refer to Section 18.4.1.1, “Writing the FCLKDIV Register” for more information. |

### 18.3.2.2 Flash Security Register (FSEC)

The FSEC register holds all bits associated with the security of the MCU and Flash module.

Module Base + 0x0001

| | 7 | 6 | 5 | 4 | 3 | 2 | 1 | 0 |
|---|---|---|---|---|---|---|---|---|
| R | KEYEN1 | KEYEN0 | NV5 | NV4 | NV3 | NV2 | SEC1 | SEC0 |
| W | | | | | | | | |
| Reset | F | F | F | F | F | F | F | F |

= Unimplemented or Reserved

**Figure 18-5. Flash Security Register (FSEC)**

All bits in the FSEC register are readable but not writable.

The FSEC register is loaded from the Flash configuration field at 0xFF0F during the reset sequence, indicated by F in Figure 18-5.

**Table 18-4. FSEC Field Descriptions**

| Field | Description |
|---|---|
| 7–6<br>KEYEN[1:0] | **Backdoor Key Security Enable Bits** — The KEYEN[1:0] bits define the enabling of the backdoor key access to the Flash module as shown in Table 18-5. |
| 5–2<br>NV[5:2] | **Nonvolatile Flag Bits** — The NV[5:2] bits are available to the user as nonvolatile flags. |
| 1–0<br>SEC[1:0] | **Flash Security Bits** — The SEC[1:0] bits define the security state of the MCU as shown in Table 18-6. If the Flash module is unsecured using backdoor key access, the SEC[1:0] bits are forced to 1:0. |

**Table 18-5. Flash KEYEN States**

| KEYEN[1:0] | Status of Backdoor Key Access |
|---|---|
| 00 | DISABLED |
| 01[1] | DISABLED |
| 10 | ENABLED |
| 11 | DISABLED |

1. Preferred KEYEN state to disable Backdoor Key Access.

**Table 18-6. Flash Security States**

| SEC[1:0] | Status of Security |
|---|---|
| 00 | Secured |
| 01[1] | Secured |
| 10 | Unsecured |
| 11 | Secured |

1. Preferred SEC state to set MCU to secured state.

The security function in the Flash module is described in Section 18.4.3, “Flash Module Security”.

### 18.3.2.3 RESERVED1

This register is reserved for factory testing and is not accessible to the user.

Module Base + 0x0002

| | 7 | 6 | 5 | 4 | 3 | 2 | 1 | 0 |
|---|---|---|---|---|---|---|---|---|
| R | 0 | 0 | 0 | 0 | 0 | 0 | 0 | 0 |
| W | | | | | | | | |
| Reset | 0 | 0 | 0 | 0 | 0 | 0 | 0 | 0 |

= Unimplemented or Reserved

**Figure 18-6. RESERVED1**

All bits read 0 and are not writable.

### 18.3.2.4 Flash Configuration Register (FCNFG)

The FCNFG register enables the Flash interrupts and gates the security backdoor key writes.

Module Base + 0x0003

| | 7 | 6 | 5 | 4 | 3 | 2 | 1 | 0 |
|---|---|---|---|---|---|---|---|---|
| R | CBEIE | CCIE | KEYACC | 0 | 0 | 0 | 0 | 0 |
| W | | | | | | | | |
| Reset | 0 | 0 | 0 | 0 | 0 | 0 | 0 | 0 |

= Unimplemented or Reserved

**Figure 18-7. Flash Configuration Register (FCNFG)**

CBEIE, CCIE, and KEYACC are readable and writable while remaining bits read 0 and are not writable. KEYACC is only writable if the KEYEN bit in the FSEC register is set to the enabled state (see Section 18.3.2.2).

**Table 18-7. FCNFG Field Descriptions**

| Field | Description |
|---|---|
| 7<br>CBEIE | **Command Buffer Empty Interrupt Enable** — The CBEIE bit enables the interrupts in case of an empty command buffer in the Flash module.<br>0 Command Buffer Empty interrupts disabled<br>1 An interrupt will be requested whenever the CBEIF flag is set (see Section 18.3.2.6) |
| 6<br>CCIE | **Command Complete Interrupt Enable** — The CCIE bit enables the interrupts in case of all commands being completed in the Flash module.<br>0 Command Complete interrupts disabled<br>1 An interrupt will be requested whenever the CCIF flag is set (see Section 18.3.2.6) |
| 5<br>KEYACC | **Enable Security Key Writing**.<br>0 Flash writes are interpreted as the start of a command write sequence<br>1 Writes to the Flash array are interpreted as a backdoor key while reads of the Flash array return invalid data |

### 18.3.2.5 Flash Protection Register (FPROT)

The FPROT register defines which Flash sectors are protected against program or erase.

Module Base + 0x0004

| | 7 | 6 | 5 | 4 | 3 | 2 | 1 | 0 |
|---|---|---|---|---|---|---|---|---|
| R | FPOPEN | NV6 | FPHDIS | FPHS1 | FPHS0 | FPLDIS | FPLS1 | FPLS0 |
| W | | | | | | | | |
| Reset | F | F | F | F | F | F | F | F |

**Figure 18-8. Flash Protection Register (FPROT)**

The FPROT register is readable in normal and special modes. FPOPEN can only be written from a 1 to a 0. FPLS[1:0] can be written anytime until FPLDIS is cleared. FPHS[1:0] can be written anytime until

FPHDIS is cleared. The FPROT register is loaded from Flash address 0xFF0D during the reset sequence, indicated by F in Figure 18-8.

To change the Flash protection that will be loaded on reset, the upper sector of the Flash array must be unprotected, then the Flash protection byte located at Flash address 0xFF0D must be written to.

A protected Flash sector is disabled by FPHDIS and FPLDIS while the size of the protected sector is defined by FPHS[1:0] and FPLS[1:0] in the FPROT register.

Trying to alter any of the protected areas will result in a protect violation error and the PVIOL flag will be set in the FSTAT register (see Section 18.3.2.6). A mass erase of the whole Flash array is only possible when protection is fully disabled by setting the FPOPEN, FPLDIS, and FPHDIS bits. An attempt to mass erase a Flash array while protection is enabled will set the PVIOL flag in the FSTAT register.

**Table 18-8. FPROT Field Descriptions**

| Field | Description |
|---|---|
| 7<br>FPOPEN | **Protection Function for Program or Erase** — It is possible using the FPOPEN bit to either select address ranges to be protected using FPHDIS, FPLDIS, FPHS[1:0] and FPLS[1:0] or to select the same ranges to be unprotected. When FPOPEN is set, FPxDIS enables the ranges to be protected, whereby clearing FPxDIS enables protection for the range specified by the corresponding FPxS[1:0] bits. When FPOPEN is cleared, FPxDIS defines unprotected ranges as specified by the corresponding FPxS[1:0] bits. In this case, setting FPxDIS enables protection. Thus the effective polarity of the FPxDIS bits is swapped by the FPOPEN bit as shown in Table 18-9. This function allows the main part of the Flash array to be protected while a small range can remain unprotected for EEPROM emulation.<br>0 The FPHDIS and FPLDIS bits define Flash address ranges to be unprotected<br>1 The FPHDIS and FPLDIS bits define Flash address ranges to be protected |
| 6<br>NV6 | **Nonvolatile Flag Bit** — The NV6 bit should remain in the erased state for future enhancements. |
| 5<br>FPHDIS | **Flash Protection Higher Address Range Disable** — The FPHDIS bit determines whether there is a protected/unprotected area in the higher space of the Flash address map.<br>0 Protection/unprotection enabled<br>1 Protection/unprotection disabled |
| 4–3<br>FPHS[1:0] | **Flash Protection Higher Address Size** — The FPHS[1:0] bits determine the size of the protected/unprotected sector as shown in Table 18-10. The FPHS[1:0] bits can only be written to while the FPHDIS bit is set. |
| 2<br>FPLDIS | **Flash Protection Lower Address Range Disable** — The FPLDIS bit determines whether there is a protected/unprotected sector in the lower space of the Flash address map.<br>0 Protection/unprotection enabled<br>1 Protection/unprotection disabled |
| 1–0<br>FPLS[1:0] | **Flash Protection Lower Address Size** — The FPLS[1:0] bits determine the size of the protected/unprotected sector as shown in Table 18-11. The FPLS[1:0] bits can only be written to while the FPLDIS bit is set. |

**Table 18-9. Flash Protection Function**

| FPOPEN | FPHDIS | FPHS[1] | FPHS[0] | FPLDIS | FPLS[1] | FPLS[0] | Function[1] |
|---|---|---|---|---|---|---|---|
| 1 | 1 | x | x | 1 | x | x | No protection |
| 1 | 1 | x | x | 0 | x | x | Protect low range |
| 1 | 0 | x | x | 1 | x | x | Protect high range |
| 1 | 0 | x | x | 0 | x | x | Protect high and low ranges |
| 0 | 1 | x | x | 1 | x | x | Full Flash array protected |
| 0 | 0 | x | x | 1 | x | x | Unprotected high range |
| 0 | 1 | x | x | 0 | x | x | Unprotected low range |
| 0 | 0 | x | x | 0 | x | x | Unprotected high and low ranges |

1. For range sizes refer to Table 18-10 and  or Table 18-11.

**Table 18-10. Flash Protection Higher Address Range**

| FPHS[1:0] | Address Range | Range Size |
|---|---|---|
| 00 | 0xF800–0xFFFF | 2 Kbytes |
| 01 | 0xF000–0xFFFF | 4 Kbytes |
| 10 | 0xE000–0xFFFF | 8 Kbytes |
| 11 | 0xC000–0xFFFF | 16 Kbytes |

**Table 18-11. Flash Protection Lower Address Range**

| FPLS[1:0] | Address Range | Range Size |
|---|---|---|
| 00 | 0x4000–0x41FF | 512 bytes |
| 01 | 0x4000–0x43FF | 1 Kbyte |
| 10 | 0x4000–0x47FF | 2 Kbytes |
| 11 | 0x4000–0x4FFF | 4 Kbytes |

Figure 18-9 illustrates all possible protection scenarios. Although the protection scheme is loaded from the Flash array after reset, it is allowed to change in normal modes. This protection scheme can be used by applications requiring re-programming in single chip mode while providing as much protection as possible if no re-programming is required.

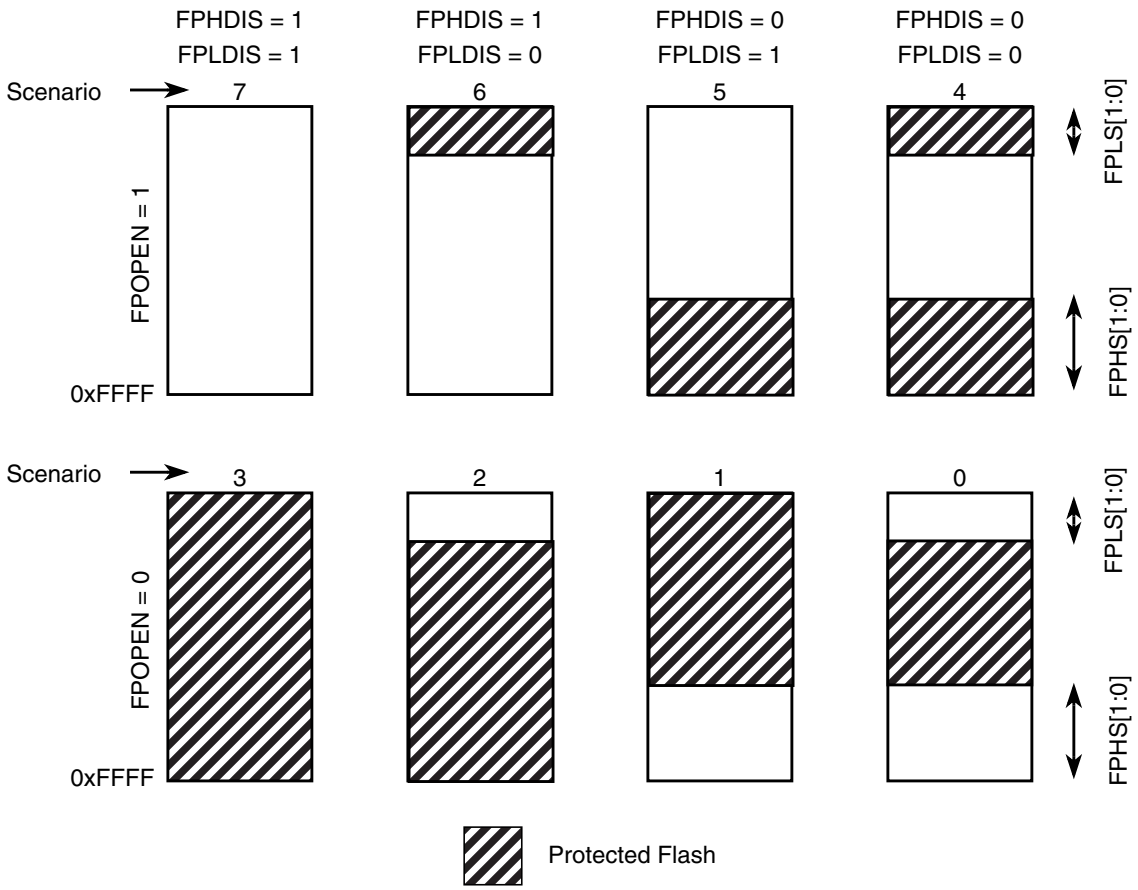


**Figure 18-9. Flash Protection Scenarios**

### 18.3.2.5.1 Flash Protection Restrictions

The general guideline is that protection can only be added, not removed. All valid transitions between Flash protection scenarios are specified in Table 18-12. Any attempt to write an invalid scenario to the FPROT register will be ignored and the FPROT register will remain unchanged. The contents of the FPROT register reflect the active protection scenario.

**Table 18-12. Flash Protection Scenario Transitions**

| From Protection Scenario | To Protection Scenario[1] | | | | | | | |
|---|---|---|---|---|---|---|---|---|
| | 0 | 1 | 2 | 3 | 4 | 5 | 6 | 7 |
| 0 | X | X | X | X | | | | |
| 1 | | X | | X | | | | |
| 2 | | | X | X | | | | |
| 3 | | | | X | | | | |
| 4 | | | | X | X | | | |
| 5 | | | X | X | X | X | | |

**Table 18-12. Flash Protection Scenario Transitions**

| From Protection Scenario | To Protection Scenario[1] | | | | | | | |
|---|---|---|---|---|---|---|---|---|
| | 0 | 1 | 2 | 3 | 4 | 5 | 6 | 7 |
| 6 | | X | | X | X | | X | |
| 7 | X | X | X | X | X | X | X | X |

1. Allowed transitions marked with X.

### 18.3.2.6 Flash Status Register (FSTAT)

The FSTAT register defines the status of the Flash command controller and the results of command execution.

Module Base + 0x0005

| | 7 | 6 | 5 | 4 | 3 | 2 | 1 | 0 |
|---|---|---|---|---|---|---|---|---|
| R | CBEIF | CCIF | PVIOL | ACCERR | 0 | BLANK | FAIL | DONE |
| W | | | | | | | | |
| Reset | 1 | 1 | 0 | 0 | 0 | 0 | 0 | 1 |

= Unimplemented or Reserved

**Figure 18-10. Flash Status Register (FSTAT)**

In normal modes, bits CBEIF, PVIOL, and ACCERR are readable and writable, bits CCIF and BLANK are readable and not writable, remaining bits, including FAIL and DONE, read 0 and are not writable. In special modes, FAIL is readable and writable while DONE is readable but not writable. FAIL must be clear in special modes when starting a command write sequence.

**Table 18-13. FSTAT Field Descriptions**

| Field | Description |
|---|---|
| 7<br>CBEIF | **Command Buffer Empty Interrupt Flag** — The CBEIF flag indicates that the address, data and command buffers are empty so that a new command write sequence can be started. The CBEIF flag is cleared by writing a 1 to CBEIF. Writing a 0 to the CBEIF flag has no effect on CBEIF. Writing a 0 to CBEIF after writing an aligned word to the Flash address space but before CBEIF is cleared will abort a command write sequence and cause the ACCERR flag in the FSTAT register to be set. Writing a 0 to CBEIF outside of a command write sequence will not set the ACCERR flag. The CBEIF flag is used together with the CBEIE bit in the FCNFG register to generate an interrupt request (see Figure 18-26).<br>0 Buffers are full<br>1 Buffers are ready to accept a new command |
| 6<br>CCIF | **Command Complete Interrupt Flag** — The CCIF flag indicates that there are no more commands pending. The CCIF flag is cleared when CBEIF is clear and sets automatically upon completion of all active and pending commands. The CCIF flag does not set when an active commands completes and a pending command is fetched from the command buffer. Writing to the CCIF flag has no effect. The CCIF flag is used together with the CCIE bit in the FCNFG register to generate an interrupt request (see Figure 18-26).<br>0 Command in progress<br>1 All commands are completed |

**Table 18-13. FSTAT Field Descriptions**

| Field | Description |
|---|---|
| 5<br>PVIOL | **Protection Violation** — The PVIOL flag indicates an attempt was made to program or erase an address in a protected Flash array memory area. The PVIOL flag is cleared by writing a 1 to PVIOL. Writing a 0 to the PVIOL flag has no effect on PVIOL. While PVIOL is set, it is not possible to launch another command.<br>0 No protection violation detected<br>1 Protection violation has occurred |
| 4<br>ACCERR | **Access Error** — The ACCERR flag indicates an illegal access to the Flash array caused by either a violation of the command write sequence, issuing an illegal command (illegal combination of the CMDBx bits in the FCMD register) or the execution of a CPU STOP instruction while a command is executing (CCIF=0). The ACCERR flag is cleared by writing a 1 to ACCERR. Writing a 0 to the ACCERR flag has no effect on ACCERR. While ACCERR is set, it is not possible to launch another command.<br>0 No access error detected<br>1 Access error has occurred |
| 2<br>BLANK | **Flash Array Has Been Verified as Erased** — The BLANK flag indicates that an erase verify command has checked the Flash array and found it to be erased. The BLANK flag is cleared by hardware when CBEIF is cleared as part of a new valid command write sequence. Writing to the BLANK flag has no effect on BLANK.<br>0 If an erase verify command has been requested, and the CCIF flag is set, then a 0 in BLANK indicates the array is not erased<br>1 Flash array verifies as erased |
| 1<br>FAIL | **Flag Indicating a Failed Flash Operation** — In special modes, the FAIL flag will set if the erase verify operation fails (Flash array verified as not erased). Writing a 0 to the FAIL flag has no effect on FAIL. The FAIL flag is cleared by writing a 1 to FAIL. While FAIL is set, it is not possible to launch another command.<br>0 Flash operation completed without error<br>1 Flash operation failed |
| 0<br>DONE | **Flag Indicating a Failed Operation is not Active** — In special modes, the DONE flag will clear if a program, erase, or erase verify operation is active.<br>0 Flash operation is active<br>1 Flash operation is not active |

### 18.3.2.7 Flash Command Register (FCMD)

The FCMD register defines the Flash commands.

Module Base + 0x0006

| | 7 | 6 | 5 | 4 | 3 | 2 | 1 | 0 |
|---|---|---|---|---|---|---|---|---|
| R | 0 | CMDB6 | CMDB5 | 0 | 0 | CMDB2 | 0 | CMDB0 |
| W | | | | | | | | |
| Reset | 0 | 0 | 0 | 0 | 0 | 0 | 0 | 0 |

= Unimplemented or Reserved

**Figure 18-11. Flash Command Register (FCMD)**

Bits CMDB6, CMDB5, CMDB2, and CMDB0 are readable and writable during a command write sequence while bits 7, 4, 3, and 1 read 0 and are not writable.

**Table 18-14. FCMD Field Descriptions**

| Field | Description |
|---|---|
| 6, 5, 2, 0<br>CMDB[6:5]<br>CMDB[2]<br>CMDB[0] | Valid Flash commands are shown in Table 18-15. An attempt to execute any command other than those listed in Table 18-15 will set the ACCERR bit in the FSTAT register (see Section 18.3.2.6). |

**Table 18-15. Valid Flash Command List**

| CMDB | NVM Command |
|---|---|
| 0x05 | Erase verify |
| 0x20 | Word program |
| 0x40 | Sector erase |
| 0x41 | Mass erase |

### 18.3.2.8 RESERVED2

This register is reserved for factory testing and is not accessible to the user.

Module Base + 0x0007

| | 7 | 6 | 5 | 4 | 3 | 2 | 1 | 0 |
|---|---|---|---|---|---|---|---|---|
| R | 0 | 0 | 0 | 0 | 0 | 0 | 0 | 0 |
| W | | | | | | | | |
| Reset | 0 | 0 | 0 | 0 | 0 | 0 | 0 | 0 |

= Unimplemented or Reserved

**Figure 18-12. RESERVED2**

All bits read 0 and are not writable.

### 18.3.2.9 Flash Address Register (FADDR)

FADDRHI and FADDRLO are the Flash address registers.

Module Base + 0x0008

| | 7 | 6 | 5 | 4 | 3 | 2 | 1 | 0 |
|---|---|---|---|---|---|---|---|---|
| R | 0 | 0 | FABHI | | | | | |
| W | | | | | | | | |
| Reset | 0 | 0 | 0 | 0 | 0 | 0 | 0 | 0 |

= Unimplemented or Reserved

**Figure 18-13. Flash Address High Register (FADDRHI)**

Module Base + 0x0009

| | 7 | 6 | 5 | 4 | 3 | 2 | 1 | 0 |
|---|---|---|---|---|---|---|---|---|
| R<br>W | FABLO | | | | | | | |
| Reset | 0 | 0 | 0 | 0 | 0 | 0 | 0 | 0 |

**Figure 18-14. Flash Address Low Register (FADDRLO)**

In normal modes, all FABHI and FABLO bits read 0 and are not writable. In special modes, the FABHI and FABLO bits are readable and writable. For sector erase, the MCU address bits [8:0] are ignored. For mass erase, any address within the Flash array is valid to start the command.

### 18.3.2.10 Flash Data Register (FDATA)

FDATAHI and FDATALO are the Flash data registers.

Module Base + 0x000A

| | 7 | 6 | 5 | 4 | 3 | 2 | 1 | 0 |
|---|---|---|---|---|---|---|---|---|
| R<br>W | FDHI | | | | | | | |
| Reset | 0 | 0 | 0 | 0 | 0 | 0 | 0 | 0 |

**Figure 18-15. Flash Data High Register (FDATAHI)**

Module Base + 0x000B

| | 7 | 6 | 5 | 4 | 3 | 2 | 1 | 0 |
|---|---|---|---|---|---|---|---|---|
| R<br>W | FDLO | | | | | | | |
| Reset | 0 | 0 | 0 | 0 | 0 | 0 | 0 | 0 |

**Figure 18-16. Flash Data Low Register (FDATALO)**

In normal modes, all FDATAHI and FDATALO bits read 0 and are not writable. In special modes, all FDATAHI and FDATALO bits are readable and writable when writing to an address within the Flash address range.

### 18.3.2.11 RESERVED3

This register is reserved for factory testing and is not accessible to the user.

Module Base + 0x000C

| | 7 | 6 | 5 | 4 | 3 | 2 | 1 | 0 |
|---|---|---|---|---|---|---|---|---|
| R | 0 | 0 | 0 | 0 | 0 | 0 | 0 | 0 |
| W | | | | | | | | |
| Reset | 0 | 0 | 0 | 0 | 0 | 0 | 0 | 0 |

= Unimplemented or Reserved

**Figure 18-17. RESERVED3**

All bits read 0 and are not writable.

### 18.3.2.12 RESERVED4

This register is reserved for factory testing and is not accessible to the user.

Module Base + 0x000D

| | 7 | 6 | 5 | 4 | 3 | 2 | 1 | 0 |
|---|---|---|---|---|---|---|---|---|
| R | 0 | 0 | 0 | 0 | 0 | 0 | 0 | 0 |
| W | | | | | | | | |
| Reset | 0 | 0 | 0 | 0 | 0 | 0 | 0 | 0 |

= Unimplemented or Reserved

**Figure 18-18. RESERVED4**

All bits read 0 and are not writable.

### 18.3.2.13 RESERVED5

This register is reserved for factory testing and is not accessible to the user.

Module Base + 0x000E

| | 7 | 6 | 5 | 4 | 3 | 2 | 1 | 0 |
|---|---|---|---|---|---|---|---|---|
| R | 0 | 0 | 0 | 0 | 0 | 0 | 0 | 0 |
| W | | | | | | | | |
| Reset | 0 | 0 | 0 | 0 | 0 | 0 | 0 | 0 |

= Unimplemented or Reserved

**Figure 18-19. RESERVED5**

All bits read 0 and are not writable.

### 18.3.2.14 RESERVED6

This register is reserved for factory testing and is not accessible to the user.

Module Base + 0x000F

| | 7 | 6 | 5 | 4 | 3 | 2 | 1 | 0 |
|---|---|---|---|---|---|---|---|---|
| R | 0 | 0 | 0 | 0 | 0 | 0 | 0 | 0 |
| W | | | | | | | | |
| Reset | 0 | 0 | 0 | 0 | 0 | 0 | 0 | 0 |

= Unimplemented or Reserved

**Figure 18-20. RESERVED6**

All bits read 0 and are not writable.

## 18.4 Functional Description

### 18.4.1 Flash Command Operations

Write operations are used for the program, erase, and erase verify algorithms described in this section. The program and erase algorithms are controlled by a state machine whose timebase FCLK is derived from the oscillator clock via a programmable divider. The FCMD register as well as the associated FADDR and FDATA registers operate as a buffer and a register (2-stage FIFO) so that a new command along with the necessary data and address can be stored to the buffer while the previous command is still in progress. This pipelined operation allows a time optimization when programming more than one word on a specific row, as the high voltage generation can be kept active in between two programming commands. The pipelined operation also allows a simplification of command launching. Buffer empty as well as command completion are signalled by flags in the FSTAT register with corresponding interrupts generated, if enabled.

The next sections describe:

- How to write the FCLKDIV register
- Command write sequence used to program, erase or erase verify the Flash array
- Valid Flash commands
- Errors resulting from illegal Flash operations

#### 18.4.1.1 Writing the FCLKDIV Register

Prior to issuing any Flash command after a reset, it is first necessary to write the FCLKDIV register to divide the oscillator clock down to within the 150-kHz to 200-kHz range. Since the program and erase timings are also a function of the bus clock, the FCLKDIV determination must take this information into account.

If we define:

- FCLK as the clock of the Flash timing control block
- Tbus as the period of the bus clock
- INT(x) as taking the integer part of x (e.g., INT(4.323) = 4),

then FCLKDIV register bits PRDIV8 and FDIV[5:0] are to be set as described in Figure 18-21.

For example, if the oscillator clock frequency is 950 kHz and the bus clock is 10 MHz, FCLKDIV bits FDIV[5:0] should be set to 4 (000100) and bit PRDIV8 set to 0. The resulting FCLK is then 190 kHz. As a result, the Flash algorithm timings are increased over optimum target by:

$$(200 - 190) / 200 \times 100 = 5\%$$

Command execution time will increase proportionally with the period of FCLK.

**CAUTION**

Because of the impact of clock synchronization on the accuracy of the functional timings, programming or erasing the Flash array cannot be performed if the bus clock runs at less than 1 MHz. Programming or erasing the Flash array with an input clock < 150 kHz should be avoided. Setting FCLKDIV to a value such that FCLK < 150 kHz can destroy the Flash array due to overstress. Setting FCLKDIV to a value such that (1/FCLK + Tbus) < 5µs can result in incomplete programming or erasure of the Flash array cells.

If the FCLKDIV register is written, the bit FDIVLD is set automatically. If the FDIVLD bit is 0, the FCLKDIV register has not been written since the last reset. If the FCLKDIV register has not been written to, the Flash command loaded during a command write sequence will not execute and the ACCERR flag in the FSTAT register will set.

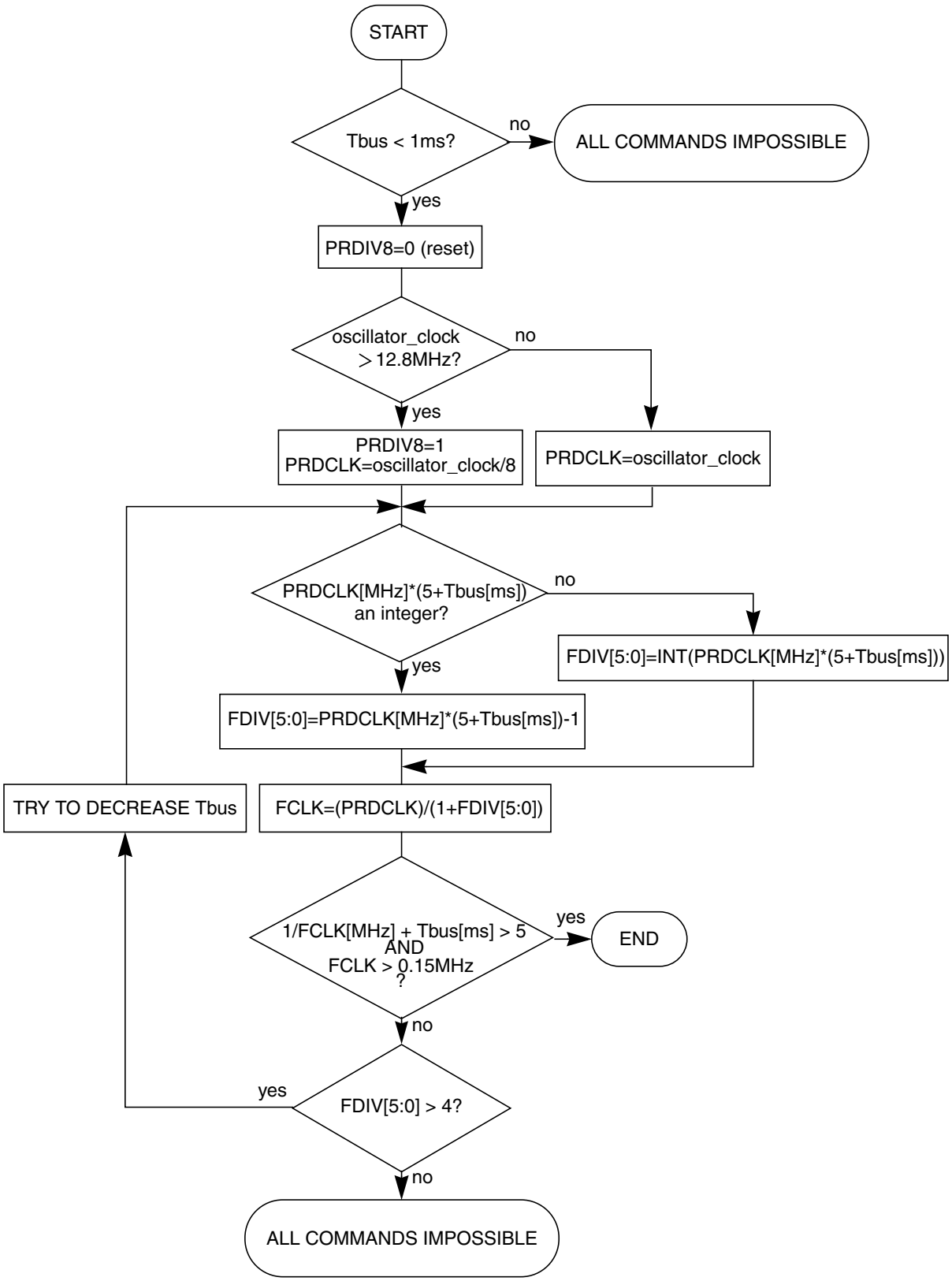


**Figure 18-21. PRDIV8 and FDIV Bits Determination Procedure**

#### 18.4.1.2 Command Write Sequence

The Flash command controller is used to supervise the command write sequence to execute program, erase, and erase verify algorithms.

Before starting a command write sequence, the ACCERR and PVIOL flags in the FSTAT register must be clear and the CBEIF flag should be tested to determine the state of the address, data, and command buffers. If the CBEIF flag is set, indicating the buffers are empty, a new command write sequence can be started. If the CBEIF flag is clear, indicating the buffers are not available, a new command write sequence will overwrite the contents of the address, data, and command buffers.

A command write sequence consists of three steps which must be strictly adhered to with writes to the Flash module not permitted between the steps. However, Flash register and array reads are allowed during a command write sequence. The basic command write sequence is as follows:

1. Write to a valid address in the Flash array memory.
2. Write a valid command to the FCMD register.
3. Clear the CBEIF flag in the FSTAT register by writing a 1 to CBEIF to launch the command.

The address written in step 1 will be stored in the FADDR registers and the data will be stored in the FDATA registers. When the CBEIF flag is cleared in step 3, the CCIF flag is cleared by the Flash command controller indicating that the command was successfully launched. For all command write sequences, the CBEIF flag will set after the CCIF flag is cleared indicating that the address, data, and command buffers are ready for a new command write sequence to begin. A buffered command will wait for the active operation to be completed before being launched. Once a command is launched, the completion of the command operation is indicated by the setting of the CCIF flag in the FSTAT register. The CCIF flag will set upon completion of all active and buffered commands.

#### 18.4.1.3 Valid Flash Commands

Table 18-16 summarizes the valid Flash commands along with the effects of the commands on the Flash array.

**Table 18-16. Valid Flash Commands**

| FCMD | Meaning | Function on Flash Array |
|---|---|---|
| 0x05 | Erase Verify | Verify all bytes in the Flash array are erased.<br>If the Flash array is erased, the BLANK bit will set in the FSTAT register upon command completion. |
| 0x20 | Program | Program a word (2 bytes) in the Flash array. |
| 0x40 | Sector Erase | Erase all 512 bytes in a sector of the Flash array. |
| 0x41 | Mass Erase | Erase all bytes in the Flash array.<br>A mass erase of the full Flash array is only possible when FPLDIS, FPHDIS, and FPOPEN bits in the FPROT register are set prior to launching the command. |

**CAUTION**

A Flash word must be in the erased state before being programmed. Cumulative programming of bits within a Flash word is not allowed.

#### 18.4.1.3.1 Erase Verify Command

The erase verify operation will verify that a Flash array is erased.

An example flow to execute the erase verify operation is shown in Figure 18-22. The erase verify command write sequence is as follows:

1. Write to a Flash array address to start the command write sequence for the erase verify command. The address and data written will be ignored.
2. Write the erase verify command, 0x05, to the FCMD register.
3. Clear the CBEIF flag in the FSTAT register by writing a 1 to CBEIF to launch the erase verify command.

After launching the erase verify command, the CCIF flag in the FSTAT register will set after the operation has completed unless a new command write sequence has been buffered. Upon completion of the erase verify operation, the BLANK flag in the FSTAT register will be set if all addresses in the Flash array are verified to be erased. If any address in the Flash array is not erased, the erase verify operation will terminate and the BLANK flag in the FSTAT register will remain clear.

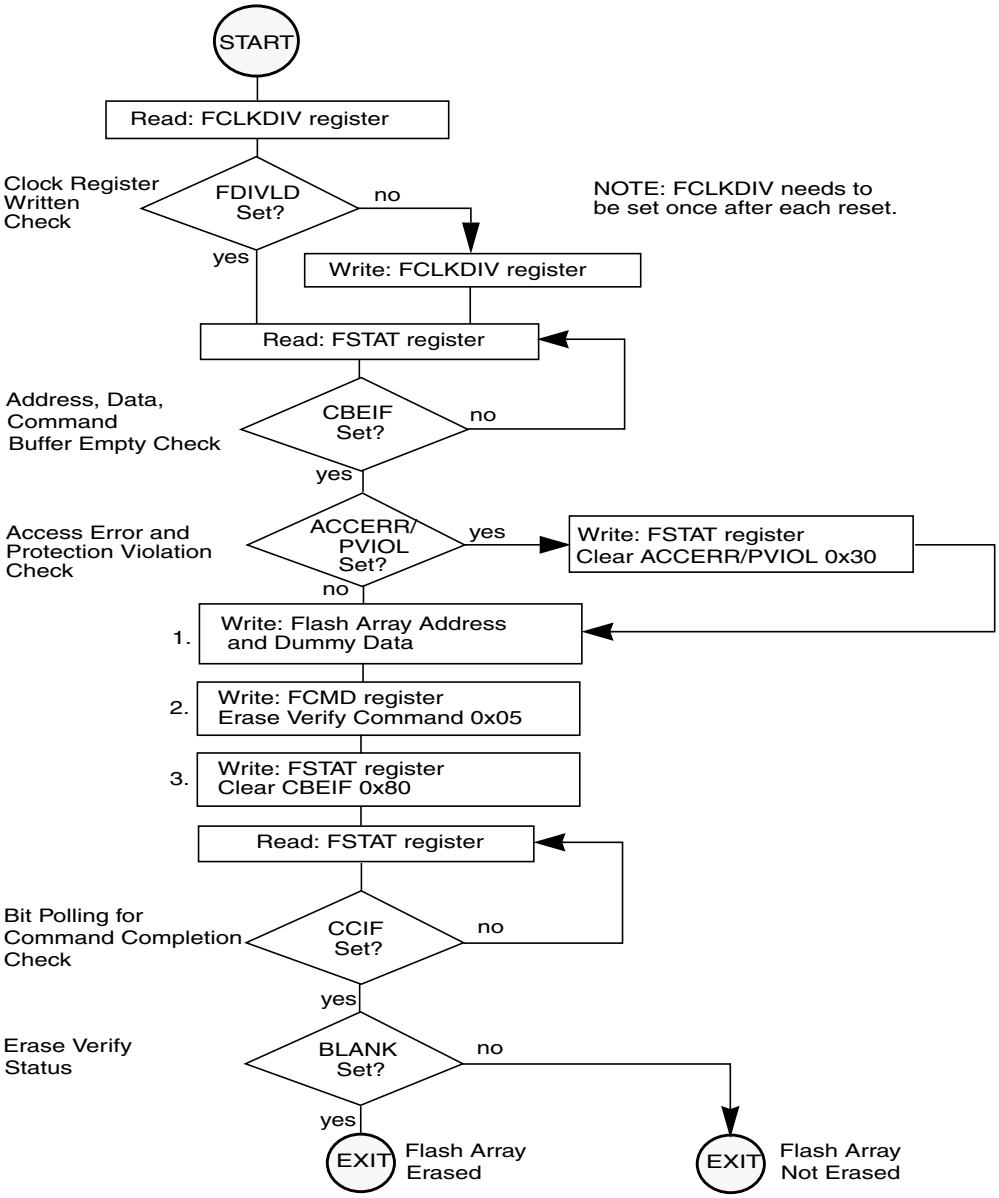


**Figure 18-22. Example Erase Verify Command Flow**

#### 18.4.1.3.2 Program Command

The program operation will program a previously erased word in the Flash array using an embedded algorithm.

An example flow to execute the program operation is shown in Figure 18-23. The program command write sequence is as follows:

1. Write to a Flash array address to start the command write sequence for the program command. The data written will be programmed to the Flash array address written.
2. Write the program command, 0x20, to the FCMD register.
3. Clear the CBEIF flag in the FSTAT register by writing a 1 to CBEIF to launch the program command.

If a word to be programmed is in a protected area of the Flash array, the PVIOL flag in the FSTAT register will set and the program command will not launch. Once the program command has successfully launched, the CCIF flag in the FSTAT register will set after the program operation has completed unless a new command write sequence has been buffered. By executing a new program command write sequence on sequential words after the CBEIF flag in the FSTAT register has been set, up to 55% faster programming time per word can be effectively achieved than by waiting for the CCIF flag to set after each program operation.

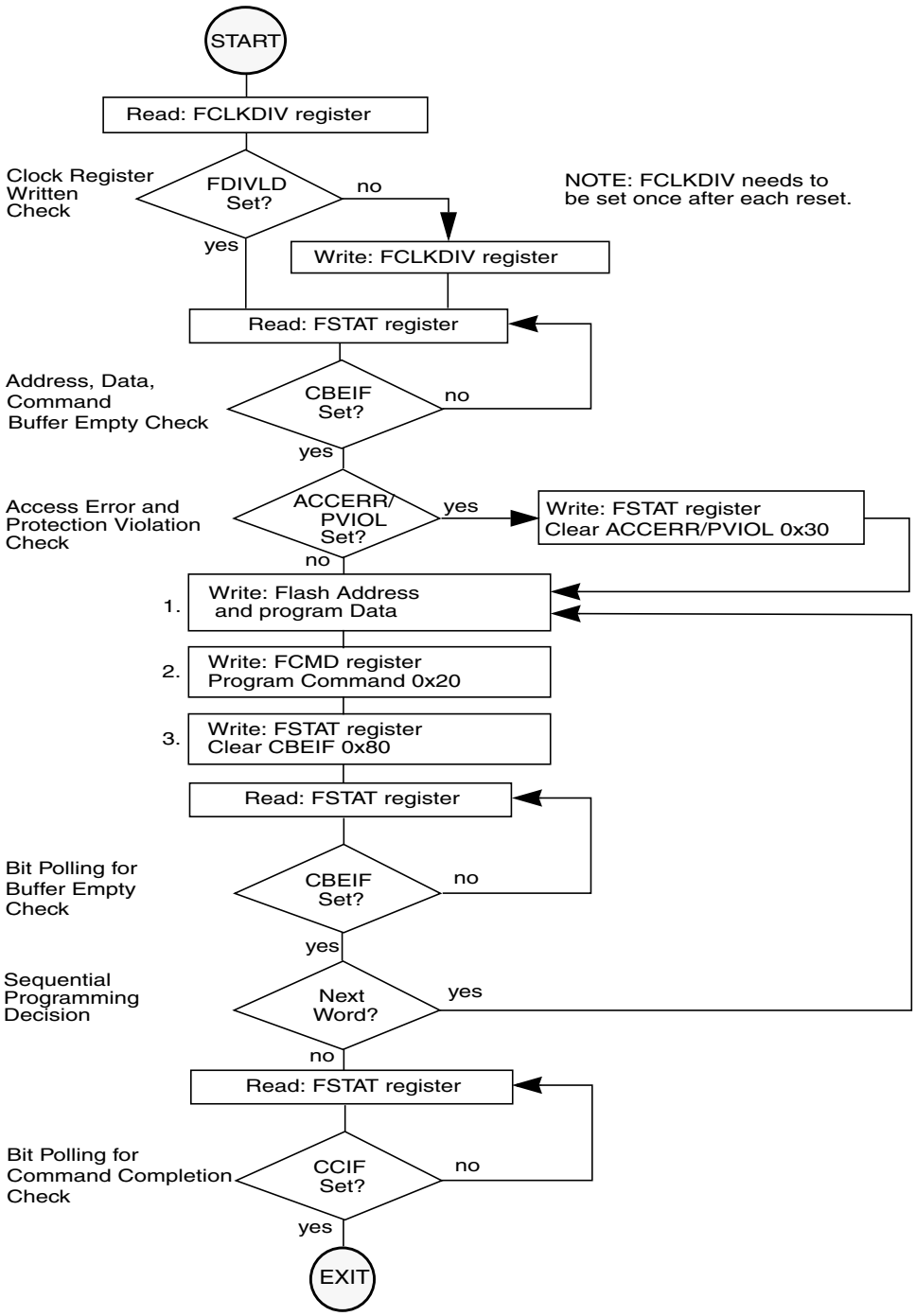


**Figure 18-23. Example Program Command Flow**

#### 18.4.1.3.3 Sector Erase Command

The sector erase operation will erase all addresses in a 512 byte sector of the Flash array using an embedded algorithm.

An example flow to execute the sector erase operation is shown in Figure 18-24. The sector erase command write sequence is as follows:

1. Write to a Flash array address to start the command write sequence for the sector erase command. The Flash address written determines the sector to be erased while MCU address bits [8:0] and the data written are ignored.
2. Write the sector erase command, 0x40, to the FCMD register.
3. Clear the CBEIF flag in the FSTAT register by writing a 1 to CBEIF to launch the sector erase command.

If a Flash sector to be erased is in a protected area of the Flash array, the PVIOL flag in the FSTAT register will set and the sector erase command will not launch. Once the sector erase command has successfully launched, the CCIF flag in the FSTAT register will set after the sector erase operation has completed unless a new command write sequence has been buffered.

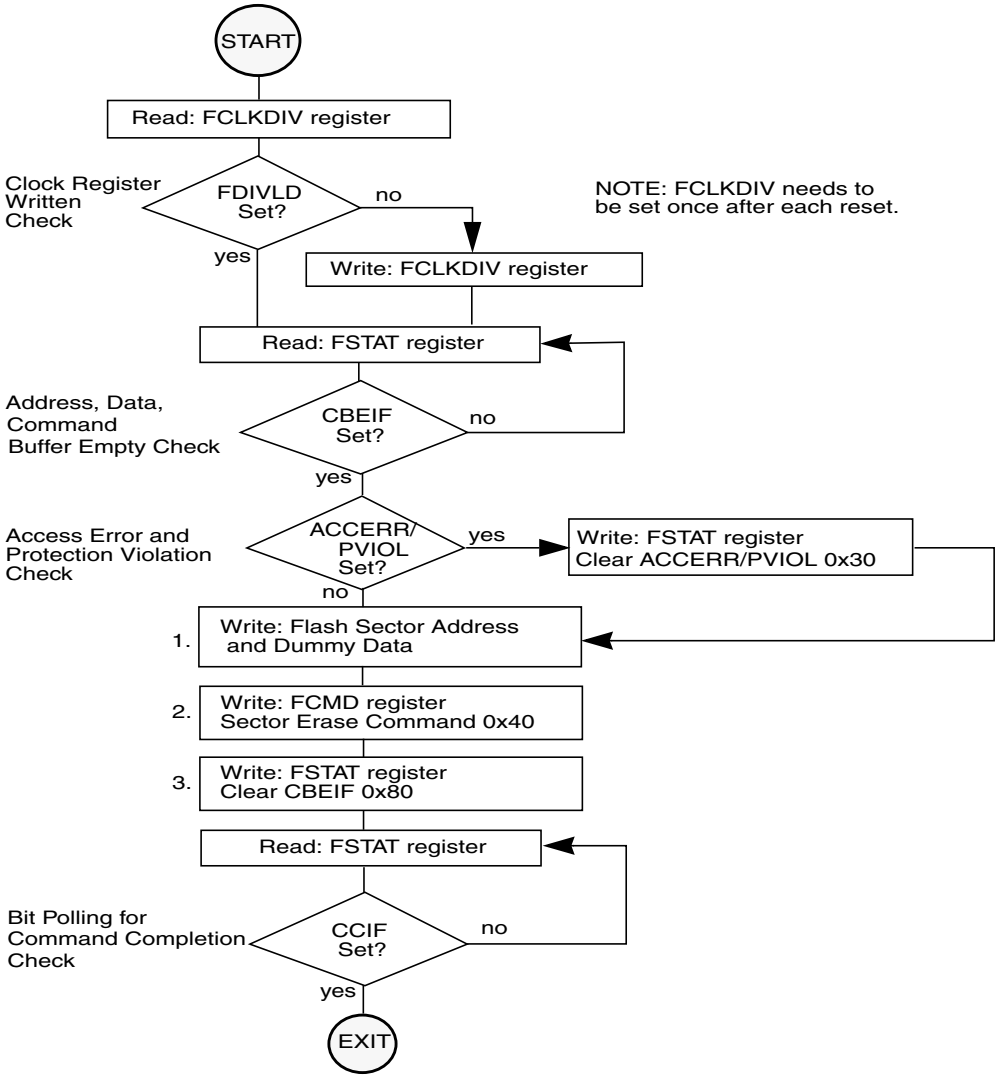


**Figure 18-24. Example Sector Erase Command Flow**

#### 18.4.1.3.4 Mass Erase Command

The mass erase operation will erase all addresses in a Flash array using an embedded algorithm.

An example flow to execute the mass erase operation is shown in Figure 18-25. The mass erase command write sequence is as follows:

1. Write to a Flash array address to start the command write sequence for the mass erase command. The address and data written will be ignored.
2. Write the mass erase command, 0x41, to the FCMD register.
3. Clear the CBEIF flag in the FSTAT register by writing a 1 to CBEIF to launch the mass erase command.

If a Flash array to be erased contains any protected area, the PVIOL flag in the FSTAT register will set and the mass erase command will not launch. Once the mass erase command has successfully launched, the CCIF flag in the FSTAT register will set after the mass erase operation has completed unless a new command write sequence has been buffered.

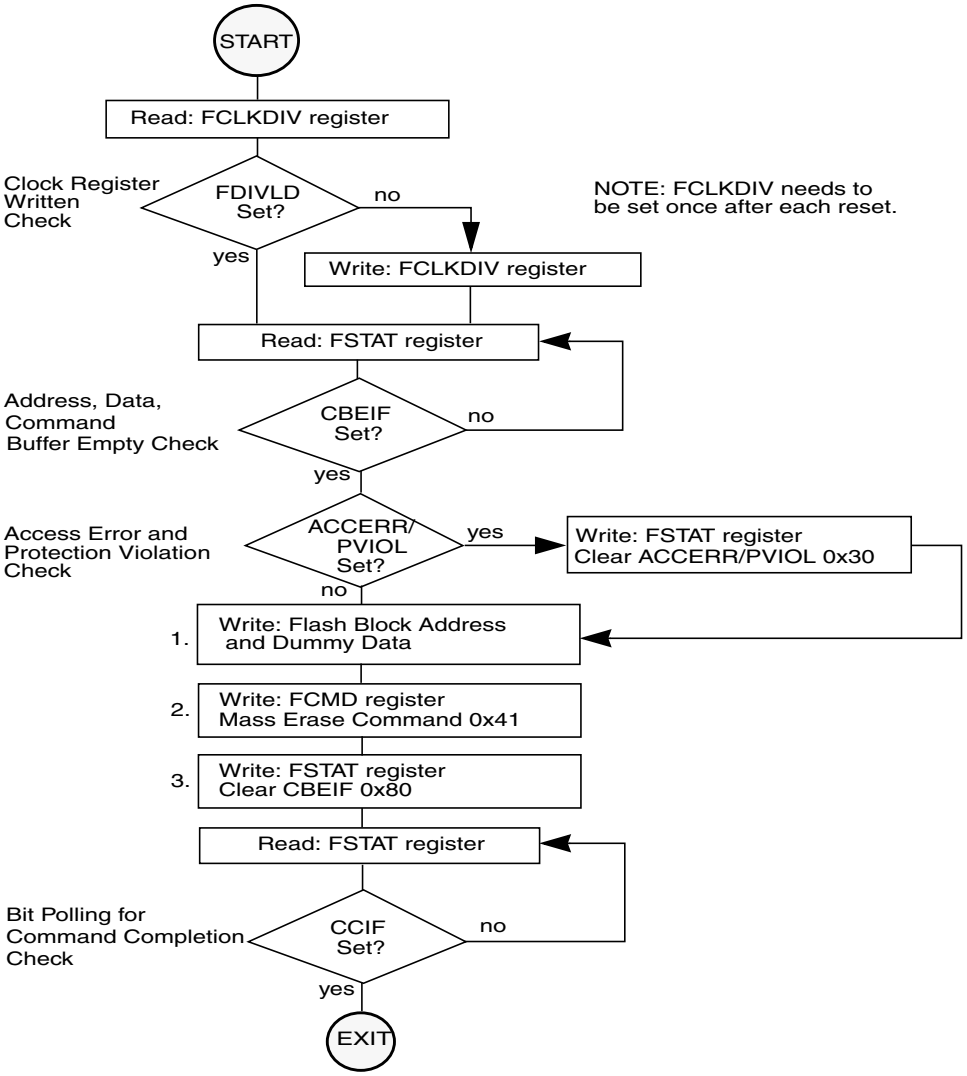


**Figure 18-25. Example Mass Erase Command Flow**

#### 18.4.1.4 Illegal Flash Operations

##### 18.4.1.4.1 Access Error

The ACCERR flag in the FSTAT register will be set during the command write sequence if any of the following illegal Flash operations are performed causing the command write sequence to immediately abort:

1. Writing to the Flash address space before initializing the FCLKDIV register
2. Writing a misaligned word or a byte to the valid Flash address space
3. Writing to the Flash address space while CBEIF is not set
4. Writing a second word to the Flash address space before executing a program or erase command on the previously written word
5. Writing to any Flash register other than FCMD after writing a word to the Flash address space
6. Writing a second command to the FCMD register before executing the previously written command
7. Writing an invalid command to the FCMD register
8. Writing to any Flash register other than FSTAT (to clear CBEIF) after writing to the FCMD register
9. The part enters stop mode and a program or erase command is in progress. The command is aborted and any pending command is killed
10. When security is enabled, a command other than mass erase originating from a non-secure memory or from the background debug mode is written to the FCMD register
11. A 0 is written to the CBEIF bit in the FSTAT register to abort a command write sequence.

The ACCERR flag will not be set if any Flash register is read during the command write sequence. If the Flash array is read during execution of an algorithm (CCIF=0), the Flash module will return invalid data and the ACCERR flag will not be set. If an ACCERR flag is set in the FSTAT register, the Flash command controller is locked. It is not possible to launch another command until the ACCERR flag is cleared.

##### 18.4.1.4.2 Protection Violation

The PVIOL flag in the FSTAT register will be set during the command write sequence after the word write to the Flash address space if any of the following illegal Flash operations are performed, causing the command write sequence to immediately abort:

1. Writing a Flash address to program in a protected area of the Flash array (see Section 18.3.2.5).
2. Writing a Flash address to erase in a protected area of the Flash array.
3. Writing the mass erase command to the FCMD register while any protection is enabled.

If the PVIOL flag is set, the Flash command controller is locked. It is not possible to launch another command until the PVIOL flag is cleared.

## 18.4.2 Operating Modes

### 18.4.2.1 Wait Mode

If the MCU enters wait mode while a Flash command is active (CCIF = 0), that command and any buffered command will be completed.

The Flash module can recover the MCU from wait mode if the interrupts are enabled (see Section 18.4.5).

### 18.4.2.2 Stop Mode

If the MCU enters stop mode while a Flash command is active (CCIF = 0), that command will be aborted and the data being programmed or erased is lost. The high voltage circuitry to the Flash array will be switched off when entering stop mode. CCIF and ACCERR flags will be set. Upon exit from stop mode, the CBEIF flag will be set and any buffered command will not be executed. The ACCERR flag must be cleared before returning to normal operation.

**NOTE**

As active Flash commands are immediately aborted when the MCU enters stop mode, it is strongly recommended that the user does not use the STOP instruction during program and erase execution.

### 18.4.2.3 Background Debug Mode

In background debug mode (BDM), the FPROT register is writable. If the MCU is unsecured, then all Flash commands listed in Table 18-16 can be executed. If the MCU is secured and is in special single chip mode, the only possible command to execute is mass erase.

## 18.4.3 Flash Module Security

The Flash module provides the necessary security information to the MCU. After each reset, the Flash module determines the security state of the MCU as defined in Section 18.3.2.2, “Flash Security Register (FSEC)”.

The contents of the Flash security/options byte at address 0xFF0F in the Flash configuration field must be changed directly by programming address 0xFF0F when the device is unsecured and the higher address sector is unprotected. If the Flash security/options byte is left in the secure state, any reset will cause the MCU to return to the secure operating mode.

### 18.4.3.1 Unsecuring the MCU using Backdoor Key Access

The MCU may only be unsecured by using the backdoor key access feature which requires knowledge of the contents of the backdoor key (four 16-bit words programmed at addresses 0xFF00–0xFF07). If KEYEN[1:0] = 1:0 and the KEYACC bit is set, a write to a backdoor key address in the Flash array triggers a comparison between the written data and the backdoor key data stored in the Flash array. If all four words of data are written to the correct addresses in the correct order and the data matches the backdoor key stored in the Flash array, the MCU will be unsecured. The data must be written to the backdoor key

addresses sequentially staring with 0xFF00-0xFF01 and ending with 0xFF06–0xFF07. The values 0x0000 and 0xFFFF are not permitted as keys. When the KEYACC bit is set, reads of the Flash array will return invalid data.

The user code stored in the Flash array must have a method of receiving the backdoor key from an external stimulus. This external stimulus would typically be through one of the on-chip serial ports.

If KEYEN[1:0] = 1:0 in the FSEC register, the MCU can be unsecured by the backdoor key access sequence described below:

1. Set the KEYACC bit in the FCNFG register
2. Write the correct four 16-bit words to Flash addresses 0xFF00–0xFF07 sequentially starting with 0xFF00
3. Clear the KEYACC bit in the FCNFG register
4. If all four 16-bit words match the backdoor key stored in Flash addresses 0xFF00–0xFF07, the MCU is unsecured and bits SEC[1:0] in the FSEC register are forced to the unsecure state of 1:0

The backdoor key access sequence is monitored by the internal security state machine. An illegal operation during the backdoor key access sequence will cause the security state machine to lock, leaving the MCU in the secured state. A reset of the MCU will cause the security state machine to exit the lock state and allow a new backdoor key access sequence to be attempted. The following illegal operations will lock the security state machine:

1. If any of the four 16-bit words does not match the backdoor key programmed in the Flash array
2. If the four 16-bit words are written in the wrong sequence
3. If more than four 16-bit words are written
4. If any of the four 16-bit words written are 0x0000 or 0xFFFF
5. If the KEYACC bit does not remain set while the four 16-bit words are written

After the backdoor key access sequence has been correctly matched, the MCU will be unsecured. The Flash security byte can be programmed to the unsecure state, if desired.

In the unsecure state, the user has full control of the contents of the four word backdoor key by programming bytes 0xFF00–0xFF07 of the Flash configuration field.

The security as defined in the Flash security/options byte at address 0xFF0F is not changed by using the backdoor key access sequence to unsecure. The backdoor key stored in addresses 0xFF00–0xFF07 is unaffected by the backdoor key access sequence. After the next reset sequence, the security state of the Flash module is determined by the Flash security/options byte at address 0xFF0F. The backdoor key access sequence has no effect on the program and erase protection defined in the FPROT register.

It is not possible to unsecure the MCU in special single chip mode by executing the backdoor key access sequence in background debug mode.

### 18.4.4 Flash Reset Sequence

On each reset, the Flash module executes a reset sequence to hold CPU activity while loading the following registers from the Flash array memory according to Table 18-1:

- FPROT — Flash Protection Register (see Section 18.3.2.5)
- FSEC — Flash Security Register (see Section 18.3.2.2)

#### 18.4.4.1 Reset While Flash Command Active

If a reset occurs while any Flash command is in progress, that command will be immediately aborted. The state of the word being programmed or the sector/array being erased is not guaranteed.

### 18.4.5 Interrupts

The Flash module can generate an interrupt when all Flash commands have completed execution or the Flash address, data, and command buffers are empty.

**Table 18-17. Flash Interrupt Sources**

| Interrupt Source | Interrupt Flag | Local Enable | Global (CCR) Mask |
|---|---|---|---|
| Flash Address, Data, and Command Buffers are empty | CBEIF (FSTAT register) | CBEIE | I Bit |
| All Flash commands have completed execution | CCIF (FSTAT register) | CCIE | I Bit |

**NOTE**

Vector addresses and their relative interrupt priority are determined at the MCU level.

#### 18.4.5.1 Description of Interrupt Operation

Figure 18-26 shows the logic used for generating interrupts.

The Flash module uses the CBEIF and CCIF flags in combination with the enable bits CBIE and CCIE to discriminate for the generation of interrupts.

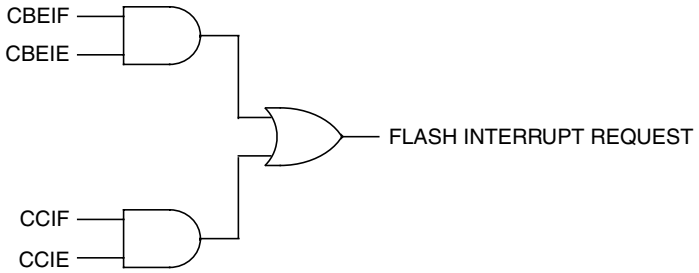


**Figure 18-26. Flash Interrupt Implementation**

For a detailed description of these register bits, refer to Section 18.3.2.4, “Flash Configuration Register (FCNFG)” and Section 18.3.2.6, “Flash Status Register (FSTAT)”.

# Chapter 19
# 64 Kbyte Flash Module (S12FTS64KV4)

## 19.1 Introduction

The FTS128K1FTS64K module implements a 12864 Kbyte Flash (nonvolatile) memory. The Flash memory contains one array of 12864 Kbytes organized as 1024512 rows of 128128 bytes with an erase sector size of eight rows (10241024 bytes). The Flash array may be read as either bytes, aligned words, or misaligned words. Read access time is one bus cycle for byte and aligned word, and two bus cycles for misaligned words.

The Flash array is ideal for program and data storage for single-supply applications allowing for field reprogramming without requiring external voltage sources for program or erase. Program and erase functions are controlled by a command driven interface. The Flash module supports both mass erase and sector erase. An erased bit reads 1 and a programmed bit reads 0. The high voltage required to program and erase is generated internally. It is not possible to read from a Flash array while it is being erased or programmed.

**CAUTION**

A Flash word must be in the erased state before being programmed.
Cumulative programming of bits within a Flash word is not allowed.

### 19.1.1 Glossary

**Command Write Sequence** — A three-step MCU instruction sequence to program, erase, or erase verify the Flash array memory.

### 19.1.2 Features

- 12864 Kbytes of Flash memory comprised of one 12864 Kbyte array divided into 12864 sectors of 10241024 bytes
- Automated program and erase algorithm
- Interrupts on Flash command completion and command buffer empty
- Fast sector erase and word program operation
- 2-stage command pipeline for faster multi-word program times
- Flexible protection scheme to prevent accidental program or erase
- Single power supply for Flash program and erase operations
- Security feature to prevent unauthorized access to the Flash array memory

### 19.1.3 Modes of Operation

See Section 19.4.2, “Operating Modes” for a description of the Flash module operating modes. For program and erase operations, refer to Section 19.4.1, “Flash Command Operations”.

### 19.1.4 Block Diagram

Figure 19-1Figure 19-2 shows a block diagram of the FTS128K1FTS64K module.

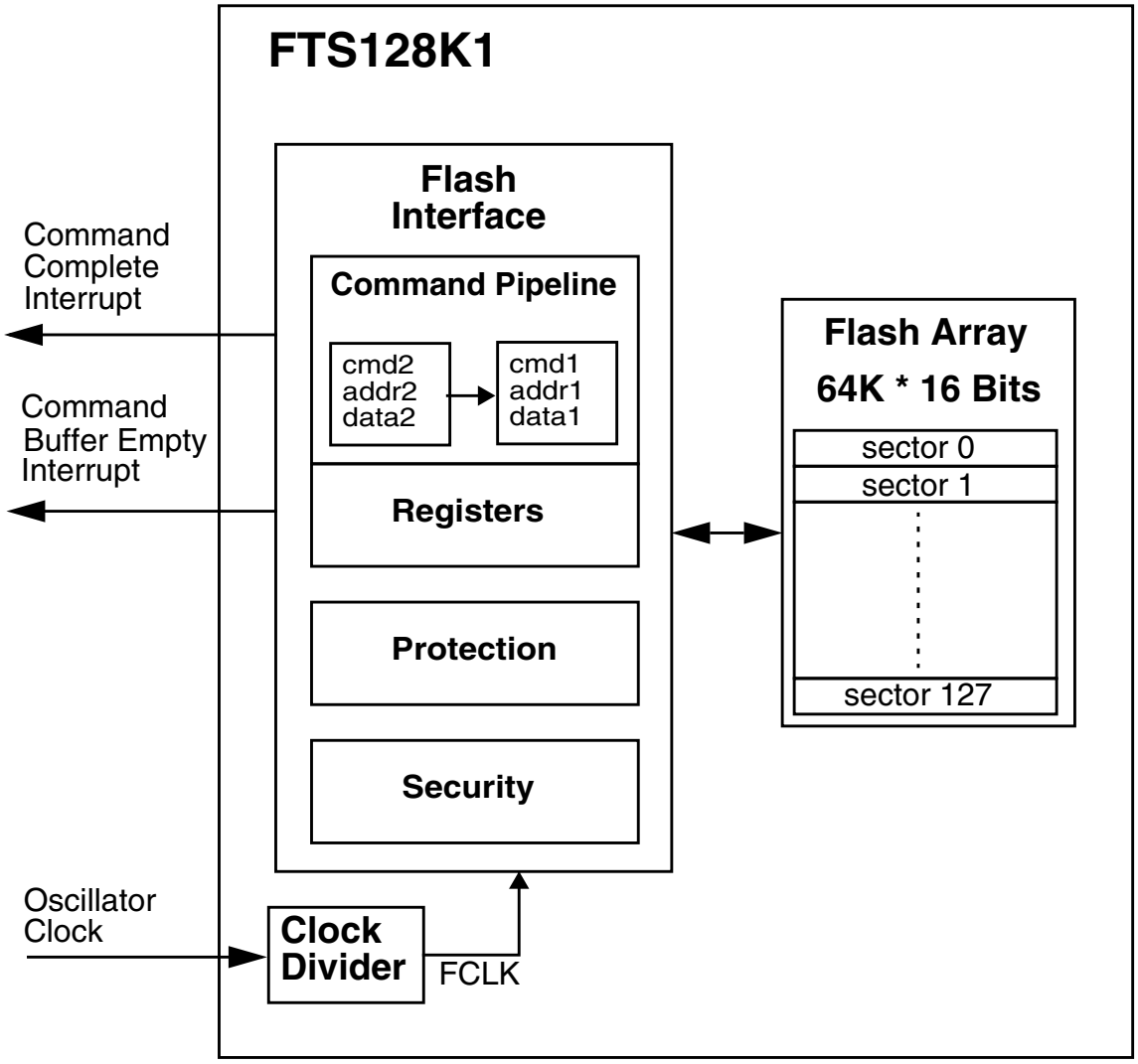


Figure 19-1. FTS128K1 Block Diagram

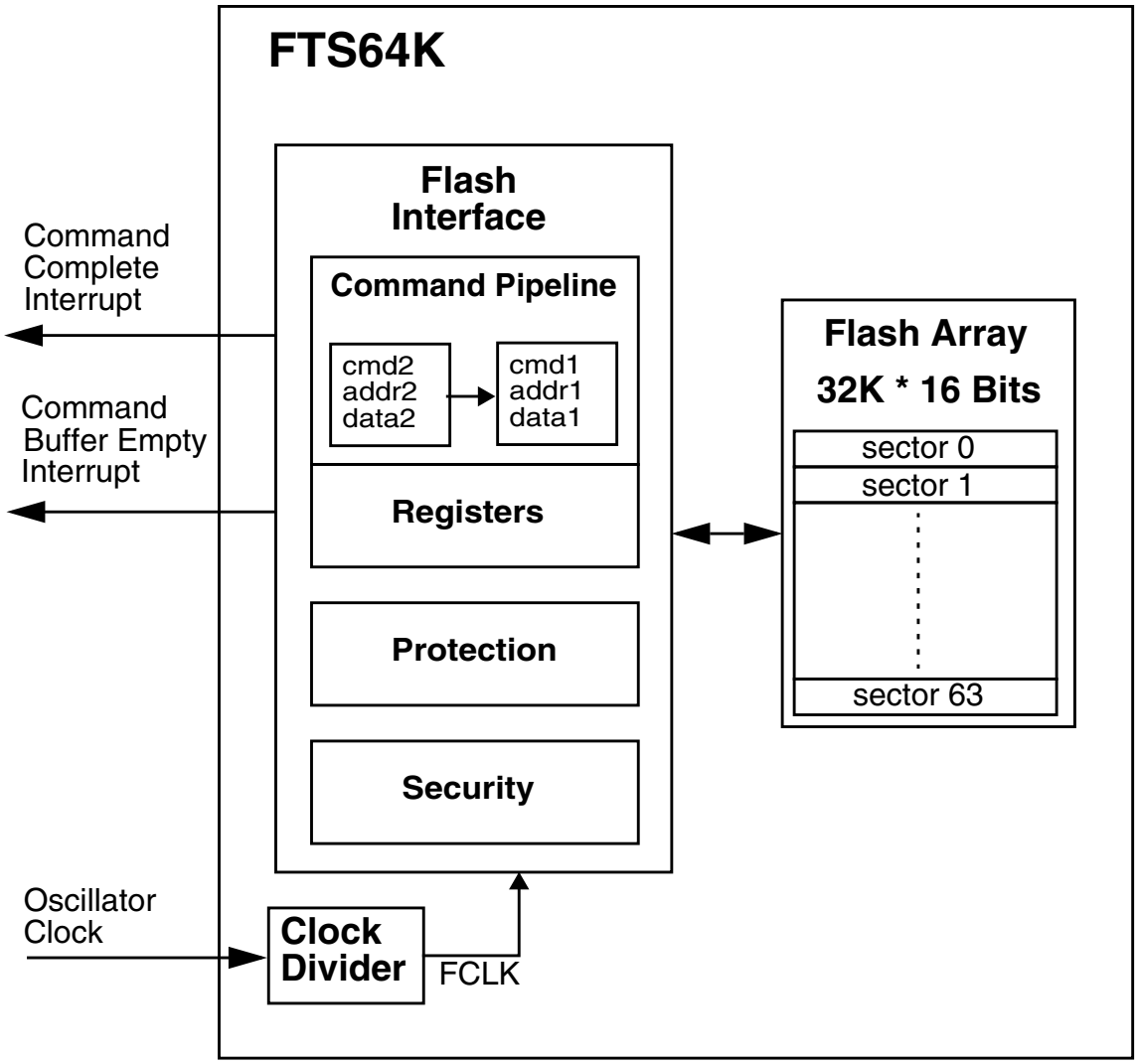


Figure 19-2. FTS64K Block Diagram

## 19.2 External Signal Description

The FTS128K1FTS64K module contains no signals that connect off-chip.

## 19.3 Memory Map and Registers

This section describes the FTS128K1FTS64K memory map and registers.

### 19.3.1 Module Memory Map

The FTS128K1FTS64K memory map is shown in Figure 19-3Figure 19-4. The HCS12 architecture places the Flash array addresses between 0x40000x4000 and 0xFFFF, which corresponds to three 16 Kbyte pages. The content of the HCS12 Core PPAGE register is used to map the logical middle page ranging from

address 0x8000 to 0xBFFF to any physical 16K byte page in the Flash array memory.[1] The FPROT register (see Section 19.3.2.5) can be set to globally protect the entire Flash array. Three separate areas, one starting from the Flash array starting address (called lower) towards higher addresses, one growing downward from the Flash array end address (called higher), and the remaining addresses, can be activated for protection. The Flash array addresses covered by these protectable regions are shown in Figure 19-3Figure 19-4. The higher address area is mainly targeted to hold the boot loader code since it covers the vector space. The lower address area can be used for EEPROM emulation in an MCU without an EEPROM module since it can be left unprotected while the remaining addresses are protected from program or erase. Default protection settings as well as security information that allows the MCU to restrict access to the Flash module are stored in the Flash configuration field described in Table 19-1.

**Table 19-1. Flash Configuration Field**

| Flash Address | Size (bytes) | Description |
|---|---|---|
| 0xFF00–0xFF07 | 8 | Backdoor Key to unlock security |
| 0xFF08–0xFF0C | 5 | Reserved |
| 0xFF0D | 1 | Flash Protection byte<br>Refer to Section 19.3.2.5, “Flash Protection Register (FPROT)” |
| 0xFF0E | 1 | Reserved |
| 0xFF0F | 1 | Flash Security/Options byte<br>Refer to Section 19.3.2.2, “Flash Security Register (FSEC)” |

1. By placing 0x3E/0x3F in the HCS12 Core PPAGE register, the bottom/top fixed 16 Kbyte pages can be seen twice in the MCU memory map.

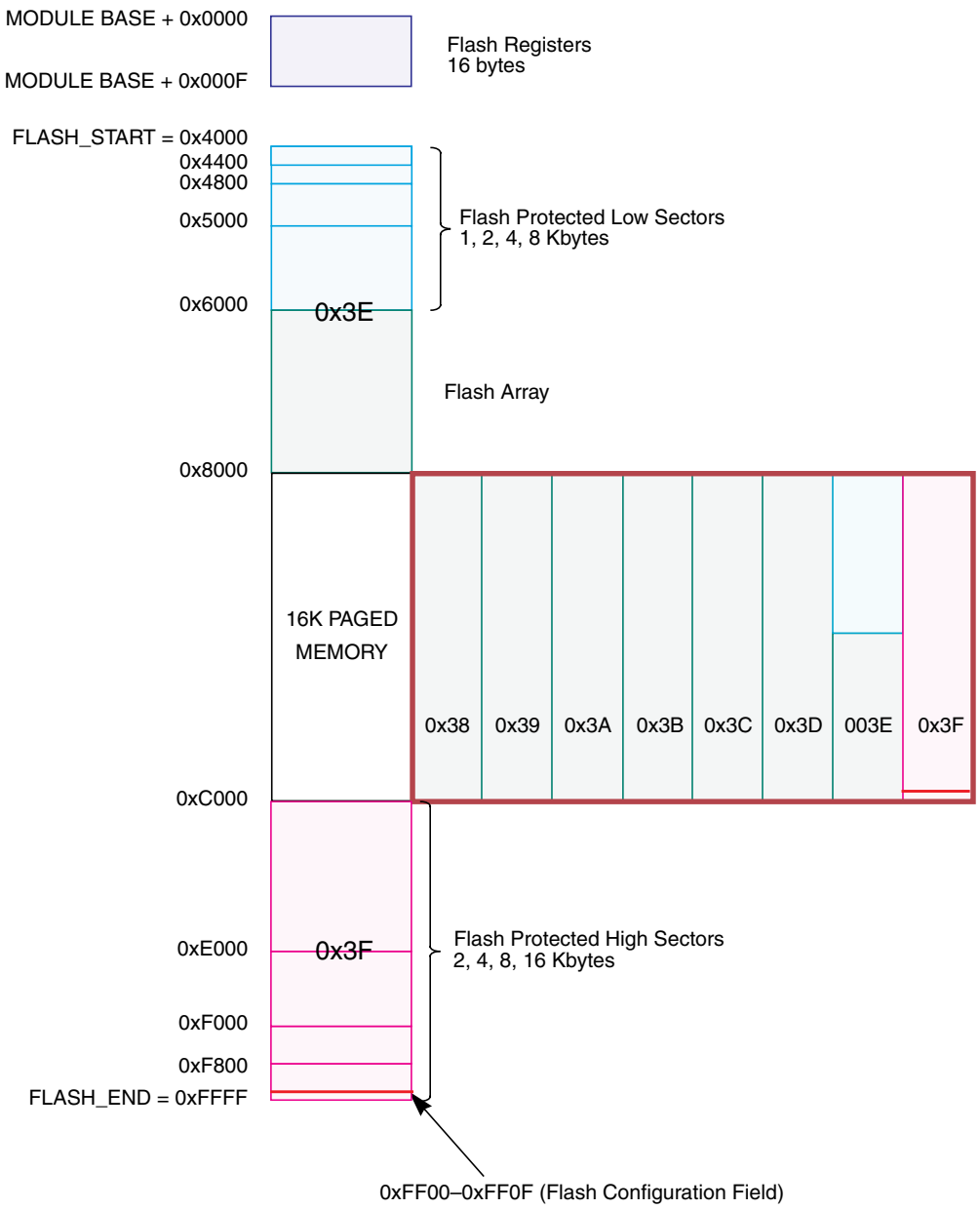


Note: 0x38–0x3F correspond to the PPAGE register content

**Figure 19-3. Flash Memory Map**

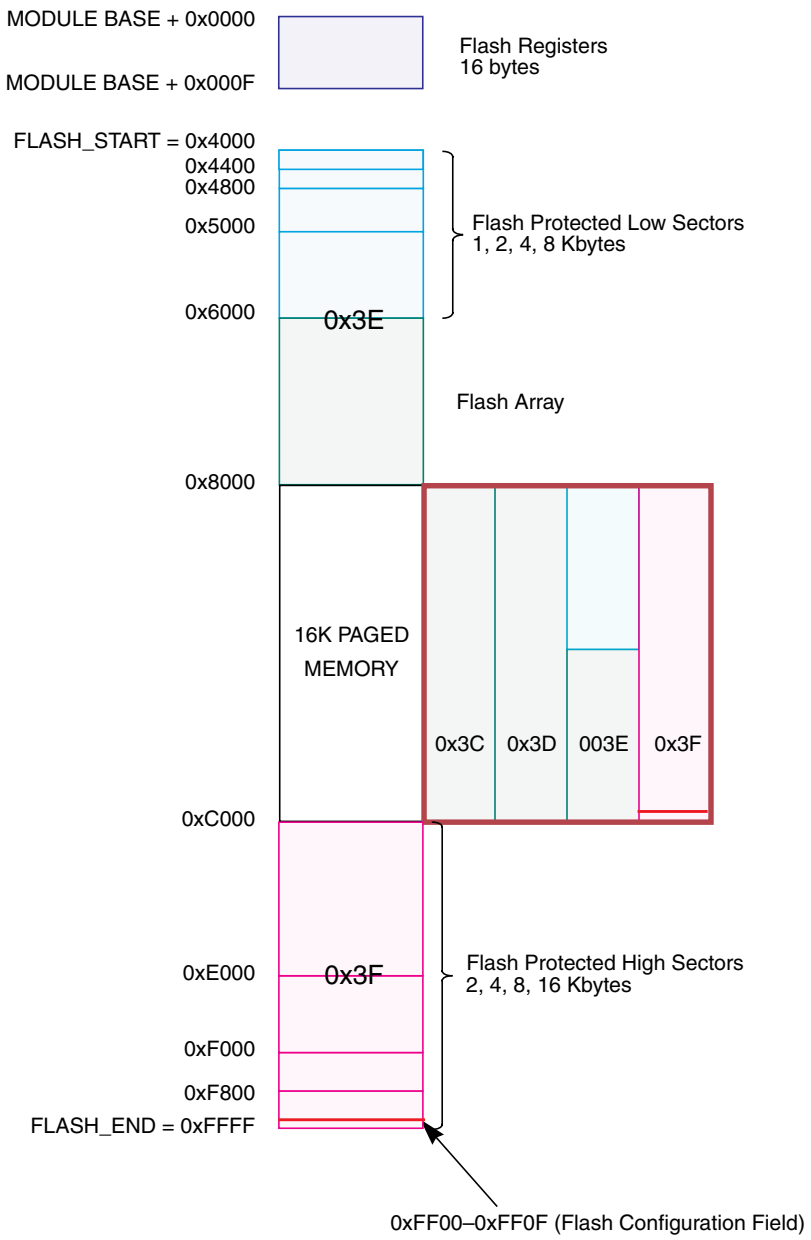


Note: 0x3C–0x3F correspond to the PPAGE register content

**Figure 19-4. Flash Memory Map**

**Table 19-2. Flash Array Memory Map Summary**

| MCU Address Range | PPAGE | Protectable Low Range | Protectable High Range | Array Relative Address[1] |
|---|---|---|---|---|
| 0x0000–0x3FFF[2] | Unpaged (0x3D) | N.A. | N.A. | 0x14000–0x17FFF |
| 0x4000–0x7FFF | Unpaged (0x3E) | 0x4000–0x43FF<br>0x4000–0x47FF<br>0x4000–0x4FFF<br>0x4000–0x5FFF | N.A. | 0x18000–0x1BFFF |
| 0x8000–0xBFFF | 0x38 | N.A. | N.A. | 0x00000–0x03FFF |
| | 0x39 | N.A. | N.A. | 0x04000–0x07FFF |
| | 0x3A | N.A. | N.A. | 0x08000–0x0BFFF |
| | 0x3B | N.A. | N.A. | 0x0C000–0x0FFFF |
| | 0x3C | N.A. | N.A. | 0x10000–0x13FFF |
| | 0x3D | N.A. | N.A. | 0x14000–0x17FFF |
| | 0x3E | 0x8000–0x83FF<br>0x8000–0x87FF<br>0x8000–0x8FFF<br>0x8000–0x9FFF | N.A. | 0x18000–0x1BFFF |
| | 0x3F | N.A. | 0xB800–0xBFFF<br>0xB000–0xBFFF<br>0xA000–0xBFFF<br>0x8000–0xBFFF | 0x1C000–0x1FFFF |
| 0xC000–0xFFFF | Unpaged (0x3F) | N.A. | 0xF800–0xFFFF<br>0xF000–0xFFFF<br>0xE000–0xFFFF<br>0xC000–0xFFFF | 0x1C000–0x1FFFF |

1. Inside Flash block.
2. If allowed by MCU.

**Table 19-3. Flash Array Memory Map Summary**

| MCU Address Range | PPAGE | Protectable Low Range | Protectable High Range | Array Relative Address[1] |
|---|---|---|---|---|
| 0x0000–0x3FFF[2] | Unpaged (0x3D) | N.A. | N.A. | 0x14000–0x17FFF |
| 0x4000–0x7FFF | Unpaged (0x3E) | 0x4000–0x43FF<br>0x4000–0x47FF<br>0x4000–0x4FFF<br>0x4000–0x5FFF | N.A. | 0x18000–0x1BFFF |
| 0x8000–0xBFFF | 0x3C | N.A. | N.A. | 0x10000–0x13FFF |
| | 0x3D | N.A. | N.A. | 0x14000–0x17FFF |
| | 0x3E | 0x8000–0x83FF<br>0x8000–0x87FF<br>0x8000–0x8FFF<br>0x8000–0x9FFF | N.A. | 0x18000–0x1BFFF |
| | 0x3F | N.A. | 0xB800–0xBFFF<br>0xB000–0xBFFF<br>0xA000–0xBFFF<br>0x8000–0xBFFF | 0x1C000–0x1FFFF |
| 0xC000–0xFFFF | Unpaged (0x3F) | N.A. | 0xF800–0xFFFF<br>0xF000–0xFFFF<br>0xE000–0xFFFF<br>0xC000–0xFFFF | 0x1C000–0x1FFFF |

1. Inside Flash block.
2. If allowed by MCU.

### 19.3.2 Register Descriptions

The Flash module contains a set of 16 control and status registers located between module base + 0x0000 and 0x000F. A summary of the Flash module registers is given in Figure 19-5. Detailed descriptions of each register bit are provided.

| Register Name | | Bit 7 | 6 | 5 | 4 | 3 | 2 | 1 | Bit 0 |
|---|---|---|---|---|---|---|---|---|---|
| 0x0000 FCLKDIV | R | FDIVLD | PRDIV8 | FDIV5 | FDIV4 | FDIV3 | FDIV2 | FDIV1 | FDIV0 |
| | W | | | | | | | | |
| 0x0001 FSEC | R | KEYEN1 | KEYEN0 | NV5 | NV4 | NV3 | NV2 | SEC1 | SEC0 |
| | W | | | | | | | | |
| 0x0002 RESERVED1 (1) | R | 0 | 0 | 0 | 0 | 0 | 0 | 0 | 0 |
| | W | | | | | | | | |
| 0x0003 FCNFG | R | CBEIE | CCIE | KEYACC | 0 | 0 | 0 | 0 | 0 |
| | W | | | | | | | | |
| 0x0004 FPROT | R | FPOPEN | NV6 | FPHDIS | FPHS1 | FPHS0 | FPLDIS | FPLS1 | FPLS0 |
| | W | | | | | | | | |
| 0x0005 FSTAT | R | CBEIF | CCIF | PVIOL | ACCERR | 0 | BLANK | FAIL | DONE |
| | W | | | | | | | | |
| 0x0006 FCMD | R | 0 | CMDB6 | CMDB5 | 0 | 0 | CMDB2 | 0 | CMDB0 |
| | W | | | | | | | | |
| 0x0007 RESERVED2[1] | R | 0 | 0 | 0 | 0 | 0 | 0 | 0 | 0 |
| | W | | | | | | | | |
| 0x0008 FADDRHI[1] | R | FABHI | | | | | | | |
| | W | | | | | | | | |
| 0x0008 FADDRHI[1] | R | 0 | FABHI | | | | | | |
| | W | | | | | | | | |
| 0x0009 FADDRLO[1] | R | FABLO | | | | | | | |
| | W | | | | | | | | |
| 0x000A FDATAHI[1] | R | FDHI | | | | | | | |
| | W | | | | | | | | |
| 0x000B FDATALO[1] | R | FDLO | | | | | | | |
| | W | | | | | | | | |
| 0x000C RESERVED3[1] | R | 0 | 0 | 0 | 0 | 0 | 0 | 0 | 0 |
| | W | | | | | | | | |
| 0x000D RESERVED4[1] | R | 0 | 0 | 0 | 0 | 0 | 0 | 0 | 0 |
| | W | | | | | | | | |
| 0x000E RESERVED5[1] | R | 0 | 0 | 0 | 0 | 0 | 0 | 0 | 0 |
| | W | | | | | | | | |
| 0x000F RESERVED6[1] | R | 0 | 0 | 0 | 0 | 0 | 0 | 0 | 0 |
| | W | | | | | | | | |

= Unimplemented or Reserved

**Figure 19-5. Flash Register Summary**

1. Intended for factory test purposes only.

### 19.3.2.1 Flash Clock Divider Register (FCLKDIV)

The FCLKDIV register is used to control timed events in program and erase algorithms.

Module Base + 0x0000

| | 7 | 6 | 5 | 4 | 3 | 2 | 1 | 0 |
|---|---|---|---|---|---|---|---|---|
| R | FDIVLD | PRDIV8 | FDIV5 | FDIV4 | FDIV3 | FDIV2 | FDIV1 | FDIV0 |
| W | | | | | | | | |
| Reset | 0 | 0 | 0 | 0 | 0 | 0 | 0 | 0 |

= Unimplemented or Reserved

**Figure 19-6. Flash Clock Divider Register (FCLKDIV)**

All bits in the FCLKDIV register are readable, bits 6–0 are write once and bit 7 is not writable.

**Table 19-4. FCLKDIV Field Descriptions**

| Field | Description |
|---|---|
| 7<br>FDIVLD | **Clock Divider Loaded**<br>0 FCLKDIV register has not been written<br>1 FCLKDIV register has been written to since the last reset |
| 6<br>PRDIV8 | **Enable Prescalar by 8**<br>0 The oscillator clock is directly fed into the Flash clock divider<br>1 The oscillator clock is divided by 8 before feeding into the Flash clock divider |
| 5–0<br>FDIV[5:0] | **Clock Divider Bits** — The combination of PRDIV8 and FDIV[5:0] must divide the oscillator clock down to a frequency of 150 kHz – 200 kHz. The maximum divide ratio is 512. Refer to Section 19.4.1.1, “Writing the FCLKDIV Register” for more information. |

### 19.3.2.2 Flash Security Register (FSEC)

The FSEC register holds all bits associated with the security of the MCU and Flash module.

Module Base + 0x0001

| | 7 | 6 | 5 | 4 | 3 | 2 | 1 | 0 |
|---|---|---|---|---|---|---|---|---|
| R | KEYEN1 | KEYEN0 | NV5 | NV4 | NV3 | NV2 | SEC1 | SEC0 |
| W | | | | | | | | |
| Reset | F | F | F | F | F | F | F | F |

= Unimplemented or Reserved

**Figure 19-7. Flash Security Register (FSEC)**

All bits in the FSEC register are readable but not writable.

The FSEC register is loaded from the Flash configuration field at 0xFF0F during the reset sequence, indicated by F in Figure 19-7.

**Table 19-5. FSEC Field Descriptions**

| Field | Description |
|---|---|
| 7–6<br>KEYEN[1:0] | **Backdoor Key Security Enable Bits** — The KEYEN[1:0] bits define the enabling of the backdoor key access to the Flash module as shown in Table 19-6. |
| 5–2<br>NV[5:2] | **Nonvolatile Flag Bits** — The NV[5:2] bits are available to the user as nonvolatile flags. |
| 1–0<br>SEC[1:0] | **Flash Security Bits** — The SEC[1:0] bits define the security state of the MCU as shown in Table 19-7. If the Flash module is unsecured using backdoor key access, the SEC[1:0] bits are forced to 1:0. |

**Table 19-6. Flash KEYEN States**

| KEYEN[1:0] | Status of Backdoor Key Access |
|---|---|
| 00 | DISABLED |
| 01[(1)] | DISABLED |
| 10 | ENABLED |
| 11 | DISABLED |

1. Preferred KEYEN state to disable Backdoor Key Access.

**Table 19-7. Flash Security States**

| SEC[1:0] | Status of Security |
|---|---|
| 00 | Secured |
| 01[(1)] | Secured |
| 10 | Unsecured |
| 11 | Secured |

1. Preferred SEC state to set MCU to secured state.

The security function in the Flash module is described in Section 19.4.3, “Flash Module Security”.

### 19.3.2.3 RESERVED1

This register is reserved for factory testing and is not accessible to the user.

Module Base + 0x0002

| | 7 | 6 | 5 | 4 | 3 | 2 | 1 | 0 |
|---|---|---|---|---|---|---|---|---|
| R | 0 | 0 | 0 | 0 | 0 | 0 | 0 | 0 |
| W | | | | | | | | |
| Reset | 0 | 0 | 0 | 0 | 0 | 0 | 0 | 0 |

= Unimplemented or Reserved

**Figure 19-8. RESERVED1**

All bits read 0 and are not writable.

### 19.3.2.4 Flash Configuration Register (FCNFG)

The FCNFG register enables the Flash interrupts and gates the security backdoor key writes.

Module Base + 0x0003

| | 7 | 6 | 5 | 4 | 3 | 2 | 1 | 0 |
|---|---|---|---|---|---|---|---|---|
| R | CBEIE | CCIE | KEYACC | 0 | 0 | 0 | 0 | 0 |
| W | | | | | | | | |
| Reset | 0 | 0 | 0 | 0 | 0 | 0 | 0 | 0 |

= Unimplemented or Reserved

**Figure 19-9. Flash Configuration Register (FCNFG)**

CBEIE, CCIE, and KEYACC are readable and writable while remaining bits read 0 and are not writable. KEYACC is only writable if the KEYEN bit in the FSEC register is set to the enabled state (see Section 19.3.2.2).

**Table 19-8. FCNFG Field Descriptions**

| Field | Description |
|---|---|
| 7<br>CBEIE | **Command Buffer Empty Interrupt Enable** — The CBEIE bit enables the interrupts in case of an empty command buffer in the Flash module.<br>0 Command Buffer Empty interrupts disabled<br>1 An interrupt will be requested whenever the CBEIF flag is set (see Section 19.3.2.6) |
| 6<br>CCIE | **Command Complete Interrupt Enable** — The CCIE bit enables the interrupts in case of all commands being completed in the Flash module.<br>0 Command Complete interrupts disabled<br>1 An interrupt will be requested whenever the CCIF flag is set (see Section 19.3.2.6) |
| 5<br>KEYACC | **Enable Security Key Writing**.<br>0 Flash writes are interpreted as the start of a command write sequence<br>1 Writes to the Flash array are interpreted as a backdoor key while reads of the Flash array return invalid data |

### 19.3.2.5 Flash Protection Register (FPROT)

The FPROT register defines which Flash sectors are protected against program or erase.

Module Base + 0x0004

| | 7 | 6 | 5 | 4 | 3 | 2 | 1 | 0 |
|---|---|---|---|---|---|---|---|---|
| R | FPOPEN | NV6 | FPHDIS | FPHS1 | FPHS0 | FPLDIS | FPLS1 | FPLS0 |
| W | | | | | | | | |
| Reset | F | F | F | F | F | F | F | F |

**Figure 19-10. Flash Protection Register (FPROT)**

The FPROT register is readable in normal and special modes. FPOPEN can only be written from a 1 to a 0. FPLS[1:0] can be written anytime until FPLDIS is cleared. FPHS[1:0] can be written anytime until

FPHDIS is cleared. The FPROT register is loaded from Flash address 0xFF0D during the reset sequence, indicated by F in Figure 19-10.

To change the Flash protection that will be loaded on reset, the upper sector of the Flash array must be unprotected, then the Flash protection byte located at Flash address 0xFF0D must be written to.

A protected Flash sector is disabled by FPHDIS and FPLDIS while the size of the protected sector is defined by FPHS[1:0] and FPLS[1:0] in the FPROT register.

Trying to alter any of the protected areas will result in a protect violation error and the PVIOL flag will be set in the FSTAT register (see Section 19.3.2.6). A mass erase of the whole Flash array is only possible when protection is fully disabled by setting the FPOPEN, FPLDIS, and FPHDIS bits. An attempt to mass erase a Flash array while protection is enabled will set the PVIOL flag in the FSTAT register.

**Table 19-9. FPROT Field Descriptions**

| Field | Description |
|---|---|
| 7<br>FPOPEN | **Protection Function for Program or Erase** — It is possible using the FPOPEN bit to either select address ranges to be protected using FPHDIS, FPLDIS, FPHS[1:0] and FPLS[1:0] or to select the same ranges to be unprotected. When FPOPEN is set, FPxDIS enables the ranges to be protected, whereby clearing FPxDIS enables protection for the range specified by the corresponding FPxS[1:0] bits. When FPOPEN is cleared, FPxDIS defines unprotected ranges as specified by the corresponding FPxS[1:0] bits. In this case, setting FPxDIS enables protection. Thus the effective polarity of the FPxDIS bits is swapped by the FPOPEN bit as shown in Table 19-10. This function allows the main part of the Flash array to be protected while a small range can remain unprotected for EEPROM emulation.<br>0 The FPHDIS and FPLDIS bits define Flash address ranges to be unprotected<br>1 The FPHDIS and FPLDIS bits define Flash address ranges to be protected |
| 6<br>NV6 | **Nonvolatile Flag Bit** — The NV6 bit should remain in the erased state for future enhancements. |
| 5<br>FPHDIS | **Flash Protection Higher Address Range Disable** — The FPHDIS bit determines whether there is a protected/unprotected area in the higher space of the Flash address map.<br>0 Protection/unprotection enabled<br>1 Protection/unprotection disabled |
| 4–3<br>FPHS[1:0] | **Flash Protection Higher Address Size** — The FPHS[1:0] bits determine the size of the protected/unprotected sector as shown in Table 19-11. The FPHS[1:0] bits can only be written to while the FPHDIS bit is set. |
| 2<br>FPLDIS | **Flash Protection Lower Address Range Disable** — The FPLDIS bit determines whether there is a protected/unprotected sector in the lower space of the Flash address map.<br>0 Protection/unprotection enabled<br>1 Protection/unprotection disabled |
| 1–0<br>FPLS[1:0] | **Flash Protection Lower Address Size** — The FPLS[1:0] bits determine the size of the protected/unprotected sector as shown in Table 19-12. The FPLS[1:0] bits can only be written to while the FPLDIS bit is set. |

**Table 19-10. Flash Protection Function**

| FPOPEN | FPHDIS | FPHS[1] | FPHS[0] | FPLDIS | FPLS[1] | FPLS[0] | Function[1] |
|---|---|---|---|---|---|---|---|
| 1 | 1 | x | x | 1 | x | x | No protection |
| 1 | 1 | x | x | 0 | x | x | Protect low range |
| 1 | 0 | x | x | 1 | x | x | Protect high range |
| 1 | 0 | x | x | 0 | x | x | Protect high and low ranges |
| 0 | 1 | x | x | 1 | x | x | Full Flash array protected |
| 0 | 0 | x | x | 1 | x | x | Unprotected high range |
| 0 | 1 | x | x | 0 | x | x | Unprotected low range |
| 0 | 0 | x | x | 0 | x | x | Unprotected high and low ranges |

1. For range sizes refer to Table 19-11 and Table 19-12 or .

**Table 19-11. Flash Protection Higher Address Range**

| FPHS[1:0] | Address Range | Range Size |
|---|---|---|
| 00 | 0xF800–0xFFFF | 2 Kbytes |
| 01 | 0xF000–0xFFFF | 4 Kbytes |
| 10 | 0xE000–0xFFFF | 8 Kbytes |
| 11 | 0xC000–0xFFFF | 16 Kbytes |

**Table 19-12. Flash Protection Lower Address Range**

| FPLS[1:0] | Address Range | Range Size |
|---|---|---|
| 00 | 0x4000–0x43FF | 1 Kbyte |
| 01 | 0x4000–0x47FF | 2 Kbytes |
| 10 | 0x4000–0x4FFF | 4 Kbytes |
| 11 | 0x4000–0x5FFF | 8 Kbytes |

Figure 19-11 illustrates all possible protection scenarios. Although the protection scheme is loaded from the Flash array after reset, it is allowed to change in normal modes. This protection scheme can be used by applications requiring re-programming in single chip mode while providing as much protection as possible if no re-programming is required.

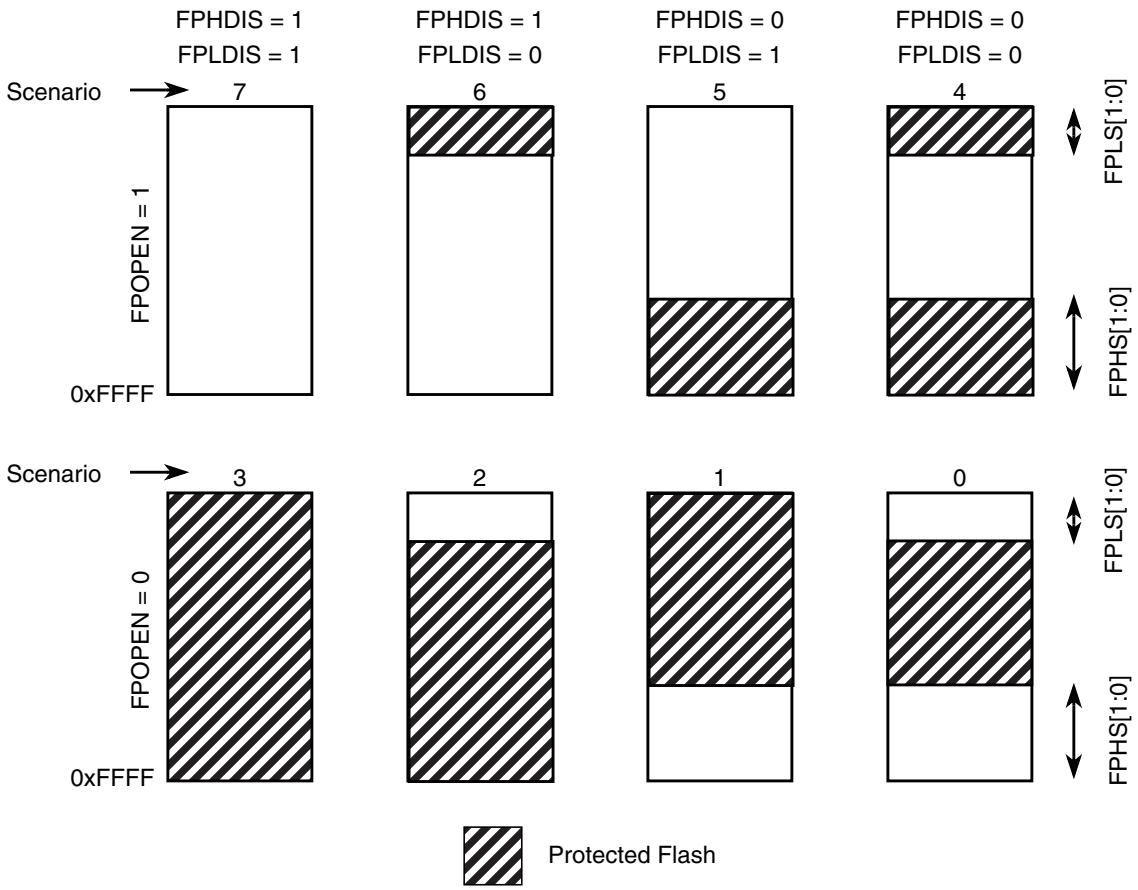


**Figure 19-11. Flash Protection Scenarios**

#### 19.3.2.5.1 Flash Protection Restrictions

The general guideline is that protection can only be added, not removed. All valid transitions between Flash protection scenarios are specified in Table 19-13. Any attempt to write an invalid scenario to the FPROT register will be ignored and the FPROT register will remain unchanged. The contents of the FPROT register reflect the active protection scenario.

**Table 19-13. Flash Protection Scenario Transitions**

| From Protection Scenario | To Protection Scenario[1] | | | | | | | |
|---|---|---|---|---|---|---|---|---|
| | 0 | 1 | 2 | 3 | 4 | 5 | 6 | 7 |
| 0 | X | X | X | X | | | | |
| 1 | | X | | X | | | | |
| 2 | | | X | X | | | | |
| 3 | | | | X | | | | |
| 4 | | | | X | X | | | |
| 5 | | | X | X | X | X | | |

**Table 19-13. Flash Protection Scenario Transitions**

| From Protection Scenario | To Protection Scenario[1] | | | | | | | |
|---|---|---|---|---|---|---|---|---|
| | 0 | 1 | 2 | 3 | 4 | 5 | 6 | 7 |
| 6 | | X | | X | X | | X | |
| 7 | X | X | X | X | X | X | X | X |

1. Allowed transitions marked with X.

### 19.3.2.6 Flash Status Register (FSTAT)

The FSTAT register defines the status of the Flash command controller and the results of command execution.

Module Base + 0x0005

| | 7 | 6 | 5 | 4 | 3 | 2 | 1 | 0 |
|---|---|---|---|---|---|---|---|---|
| R | CBEIF | CCIF | PVIOL | ACCERR | 0 | BLANK | FAIL | DONE |
| W | | | | | | | | |
| Reset | 1 | 1 | 0 | 0 | 0 | 0 | 0 | 1 |

= Unimplemented or Reserved

**Figure 19-12. Flash Status Register (FSTAT)**

In normal modes, bits CBEIF, PVIOL, and ACCERR are readable and writable, bits CCIF and BLANK are readable and not writable, remaining bits, including FAIL and DONE, read 0 and are not writable. In special modes, FAIL is readable and writable while DONE is readable but not writable. FAIL must be clear in special modes when starting a command write sequence.

**Table 19-14. FSTAT Field Descriptions**

| Field | Description |
|---|---|
| 7<br>CBEIF | **Command Buffer Empty Interrupt Flag** — The CBEIF flag indicates that the address, data and command buffers are empty so that a new command write sequence can be started. The CBEIF flag is cleared by writing a 1 to CBEIF. Writing a 0 to the CBEIF flag has no effect on CBEIF. Writing a 0 to CBEIF after writing an aligned word to the Flash address space but before CBEIF is cleared will abort a command write sequence and cause the ACCERR flag in the FSTAT register to be set. Writing a 0 to CBEIF outside of a command write sequence will not set the ACCERR flag. The CBEIF flag is used together with the CBEIE bit in the FCNFG register to generate an interrupt request (see Figure 19-29).<br>0 Buffers are full<br>1 Buffers are ready to accept a new command |
| 6<br>CCIF | **Command Complete Interrupt Flag** — The CCIF flag indicates that there are no more commands pending. The CCIF flag is cleared when CBEIF is clear and sets automatically upon completion of all active and pending commands. The CCIF flag does not set when an active commands completes and a pending command is fetched from the command buffer. Writing to the CCIF flag has no effect. The CCIF flag is used together with the CCIE bit in the FCNFG register to generate an interrupt request (see Figure 19-29).<br>0 Command in progress<br>1 All commands are completed |

**Table 19-14. FSTAT Field Descriptions**

| Field | Description |
|---|---|
| 5<br>PVIOL | **Protection Violation** — The PVIOL flag indicates an attempt was made to program or erase an address in a protected Flash array memory area. The PVIOL flag is cleared by writing a 1 to PVIOL. Writing a 0 to the PVIOL flag has no effect on PVIOL. While PVIOL is set, it is not possible to launch another command.<br>0 No protection violation detected<br>1 Protection violation has occurred |
| 4<br>ACCERR | **Access Error** — The ACCERR flag indicates an illegal access to the Flash array caused by either a violation of the command write sequence, issuing an illegal command (illegal combination of the CMDBx bits in the FCMD register) or the execution of a CPU STOP instruction while a command is executing (CCIF=0). The ACCERR flag is cleared by writing a 1 to ACCERR. Writing a 0 to the ACCERR flag has no effect on ACCERR. While ACCERR is set, it is not possible to launch another command.<br>0 No access error detected<br>1 Access error has occurred |
| 2<br>BLANK | **Flash Array Has Been Verified as Erased** — The BLANK flag indicates that an erase verify command has checked the Flash array and found it to be erased. The BLANK flag is cleared by hardware when CBEIF is cleared as part of a new valid command write sequence. Writing to the BLANK flag has no effect on BLANK.<br>0 If an erase verify command has been requested, and the CCIF flag is set, then a 0 in BLANK indicates the array is not erased<br>1 Flash array verifies as erased |
| 1<br>FAIL | **Flag Indicating a Failed Flash Operation** — In special modes, the FAIL flag will set if the erase verify operation fails (Flash array verified as not erased). Writing a 0 to the FAIL flag has no effect on FAIL. The FAIL flag is cleared by writing a 1 to FAIL. While FAIL is set, it is not possible to launch another command.<br>0 Flash operation completed without error<br>1 Flash operation failed |
| 0<br>DONE | **Flag Indicating a Failed Operation is not Active** — In special modes, the DONE flag will clear if a program, erase, or erase verify operation is active.<br>0 Flash operation is active<br>1 Flash operation is not active |

### 19.3.2.7 Flash Command Register (FCMD)

The FCMD register defines the Flash commands.

Module Base + 0x0006

| | 7 | 6 | 5 | 4 | 3 | 2 | 1 | 0 |
|---|---|---|---|---|---|---|---|---|
| R | 0 | CMDB6 | CMDB5 | 0 | 0 | CMDB2 | 0 | CMDB0 |
| W | | | | | | | | |
| Reset | 0 | 0 | 0 | 0 | 0 | 0 | 0 | 0 |

= Unimplemented or Reserved

**Figure 19-13. Flash Command Register (FCMD)**

Bits CMDB6, CMDB5, CMDB2, and CMDB0 are readable and writable during a command write sequence while bits 7, 4, 3, and 1 read 0 and are not writable.

**Table 19-15. FCMD Field Descriptions**

| Field | Description |
|---|---|
| 6, 5, 2, 0<br>CMDB[6:5]<br>CMDB[2]<br>CMDB[0] | Valid Flash commands are shown in Table 19-16. An attempt to execute any command other than those listed in Table 19-16 will set the ACCERR bit in the FSTAT register (see Section 19.3.2.6). |

**Table 19-16. Valid Flash Command List**

| CMDB | NVM Command |
|---|---|
| 0x05 | Erase verify |
| 0x20 | Word program |
| 0x40 | Sector erase |
| 0x41 | Mass erase |

### 19.3.2.8 RESERVED2

This register is reserved for factory testing and is not accessible to the user.

Module Base + 0x0007

| | 7 | 6 | 5 | 4 | 3 | 2 | 1 | 0 |
|---|---|---|---|---|---|---|---|---|
| R | 0 | 0 | 0 | 0 | 0 | 0 | 0 | 0 |
| W | | | | | | | | |
| Reset | 0 | 0 | 0 | 0 | 0 | 0 | 0 | 0 |

= Unimplemented or Reserved

**Figure 19-14. RESERVED2**

All bits read 0 and are not writable.

### 19.3.2.9 Flash Address Register (FADDR)

FADDRHI and FADDRLO are the Flash address registers.

Module Base + 0x0008

| | 7 | 6 | 5 | 4 | 3 | 2 | 1 | 0 |
|---|---|---|---|---|---|---|---|---|
| R<br>W | FABHI | | | | | | | |
| Reset | 0 | 0 | 0 | 0 | 0 | 0 | 0 | 0 |

**Figure 19-15. Flash Address High Register (FADDRHI)**

Module Base + 0x0008

| | 7 | 6 | 5 | 4 | 3 | 2 | 1 | 0 |
|---|---|---|---|---|---|---|---|---|
| R | 0 | FABHI | | | | | | |
| W | | | | | | | | |
| Reset | 0 | 0 | 0 | 0 | 0 | 0 | 0 | 0 |

= Unimplemented or Reserved

**Figure 19-16. Flash Address High Register (FADDRHI)**

Module Base + 0x0009

| | 7 | 6 | 5 | 4 | 3 | 2 | 1 | 0 |
|---|---|---|---|---|---|---|---|---|
| R | FABLO | | | | | | | |
| W | | | | | | | | |
| Reset | 0 | 0 | 0 | 0 | 0 | 0 | 0 | 0 |

**Figure 19-17. Flash Address Low Register (FADDRLO)**

In normal modes, all FABHI and FABLO bits read 0 and are not writable. In special modes, the FABHI and FABLO bits are readable and writable. For sector erase, the MCU address bits [9:0] are ignored. For mass erase, any address within the Flash array is valid to start the command.

### 19.3.2.10 Flash Data Register (FDATA)

FDATAHI and FDATALO are the Flash data registers.

Module Base + 0x000A

| | 7 | 6 | 5 | 4 | 3 | 2 | 1 | 0 |
|---|---|---|---|---|---|---|---|---|
| R | FDHI | | | | | | | |
| W | | | | | | | | |
| Reset | 0 | 0 | 0 | 0 | 0 | 0 | 0 | 0 |

**Figure 19-18. Flash Data High Register (FDATAHI)**

Module Base + 0x000B

| | 7 | 6 | 5 | 4 | 3 | 2 | 1 | 0 |
|---|---|---|---|---|---|---|---|---|
| R | FDLO | | | | | | | |
| W | | | | | | | | |
| Reset | 0 | 0 | 0 | 0 | 0 | 0 | 0 | 0 |

**Figure 19-19. Flash Data Low Register (FDATALO)**

In normal modes, all FDATAHI and FDATALO bits read 0 and are not writable. In special modes, all FDATAHI and FDATALO bits are readable and writable when writing to an address within the Flash address range.

### 19.3.2.11 RESERVED3

This register is reserved for factory testing and is not accessible to the user.

Module Base + 0x000C

| | 7 | 6 | 5 | 4 | 3 | 2 | 1 | 0 |
|---|---|---|---|---|---|---|---|---|
| R | 0 | 0 | 0 | 0 | 0 | 0 | 0 | 0 |
| W | | | | | | | | |
| Reset | 0 | 0 | 0 | 0 | 0 | 0 | 0 | 0 |

= Unimplemented or Reserved

**Figure 19-20. RESERVED3**

All bits read 0 and are not writable.

### 19.3.2.12 RESERVED4

This register is reserved for factory testing and is not accessible to the user.

Module Base + 0x000D

| | 7 | 6 | 5 | 4 | 3 | 2 | 1 | 0 |
|---|---|---|---|---|---|---|---|---|
| R | 0 | 0 | 0 | 0 | 0 | 0 | 0 | 0 |
| W | | | | | | | | |
| Reset | 0 | 0 | 0 | 0 | 0 | 0 | 0 | 0 |

= Unimplemented or Reserved

**Figure 19-21. RESERVED4**

All bits read 0 and are not writable.

### 19.3.2.13 RESERVED5

This register is reserved for factory testing and is not accessible to the user.

Module Base + 0x000E

| | 7 | 6 | 5 | 4 | 3 | 2 | 1 | 0 |
|---|---|---|---|---|---|---|---|---|
| R | 0 | 0 | 0 | 0 | 0 | 0 | 0 | 0 |
| W | | | | | | | | |
| Reset | 0 | 0 | 0 | 0 | 0 | 0 | 0 | 0 |

= Unimplemented or Reserved

**Figure 19-22. RESERVED5**

All bits read 0 and are not writable.

#### 19.3.2.14 RESERVED6

This register is reserved for factory testing and is not accessible to the user.

Module Base + 0x000F

| | 7 | 6 | 5 | 4 | 3 | 2 | 1 | 0 |
|---|---|---|---|---|---|---|---|---|
| R | 0 | 0 | 0 | 0 | 0 | 0 | 0 | 0 |
| W | | | | | | | | |
| Reset | 0 | 0 | 0 | 0 | 0 | 0 | 0 | 0 |

= Unimplemented or Reserved

**Figure 19-23. RESERVED6**

All bits read 0 and are not writable.

## 19.4 Functional Description

### 19.4.1 Flash Command Operations

Write operations are used for the program, erase, and erase verify algorithms described in this section. The program and erase algorithms are controlled by a state machine whose timebase FCLK is derived from the oscillator clock via a programmable divider. The FCMD register as well as the associated FADDR and FDATA registers operate as a buffer and a register (2-stage FIFO) so that a new command along with the necessary data and address can be stored to the buffer while the previous command is still in progress. This pipelined operation allows a time optimization when programming more than one word on a specific row, as the high voltage generation can be kept active in between two programming commands. The pipelined operation also allows a simplification of command launching. Buffer empty as well as command completion are signalled by flags in the FSTAT register with corresponding interrupts generated, if enabled.

The next sections describe:

- How to write the FCLKDIV register
- Command write sequence used to program, erase or erase verify the Flash array
- Valid Flash commands
- Errors resulting from illegal Flash operations

#### 19.4.1.1 Writing the FCLKDIV Register

Prior to issuing any Flash command after a reset, it is first necessary to write the FCLKDIV register to divide the oscillator clock down to within the 150-kHz to 200-kHz range. Since the program and erase timings are also a function of the bus clock, the FCLKDIV determination must take this information into account.

If we define:

- FCLK as the clock of the Flash timing control block

- Tbus as the period of the bus clock
- INT(x) as taking the integer part of x (e.g., INT(4.323) = 4),

then FCLKDIV register bits PRDIV8 and FDIV[5:0] are to be set as described in Figure 19-24.

For example, if the oscillator clock frequency is 950 kHz and the bus clock is 10 MHz, FCLKDIV bits FDIV[5:0] should be set to 4 (000100) and bit PRDIV8 set to 0. The resulting FCLK is then 190 kHz. As a result, the Flash algorithm timings are increased over optimum target by:

$$(200 - 190) / 200 \times 100 = 5\%$$

Command execution time will increase proportionally with the period of FCLK.

**CAUTION**

Because of the impact of clock synchronization on the accuracy of the functional timings, programming or erasing the Flash array cannot be performed if the bus clock runs at less than 1 MHz. Programming or erasing the Flash array with an input clock < 150 kHz should be avoided. Setting FCLKDIV to a value such that FCLK < 150 kHz can destroy the Flash array due to overstress. Setting FCLKDIV to a value such that (1/FCLK + Tbus) < 5µs can result in incomplete programming or erasure of the Flash array cells.

If the FCLKDIV register is written, the bit FDIVLD is set automatically. If the FDIVLD bit is 0, the FCLKDIV register has not been written since the last reset. If the FCLKDIV register has not been written to, the Flash command loaded during a command write sequence will not execute and the ACCERR flag in the FSTAT register will set.

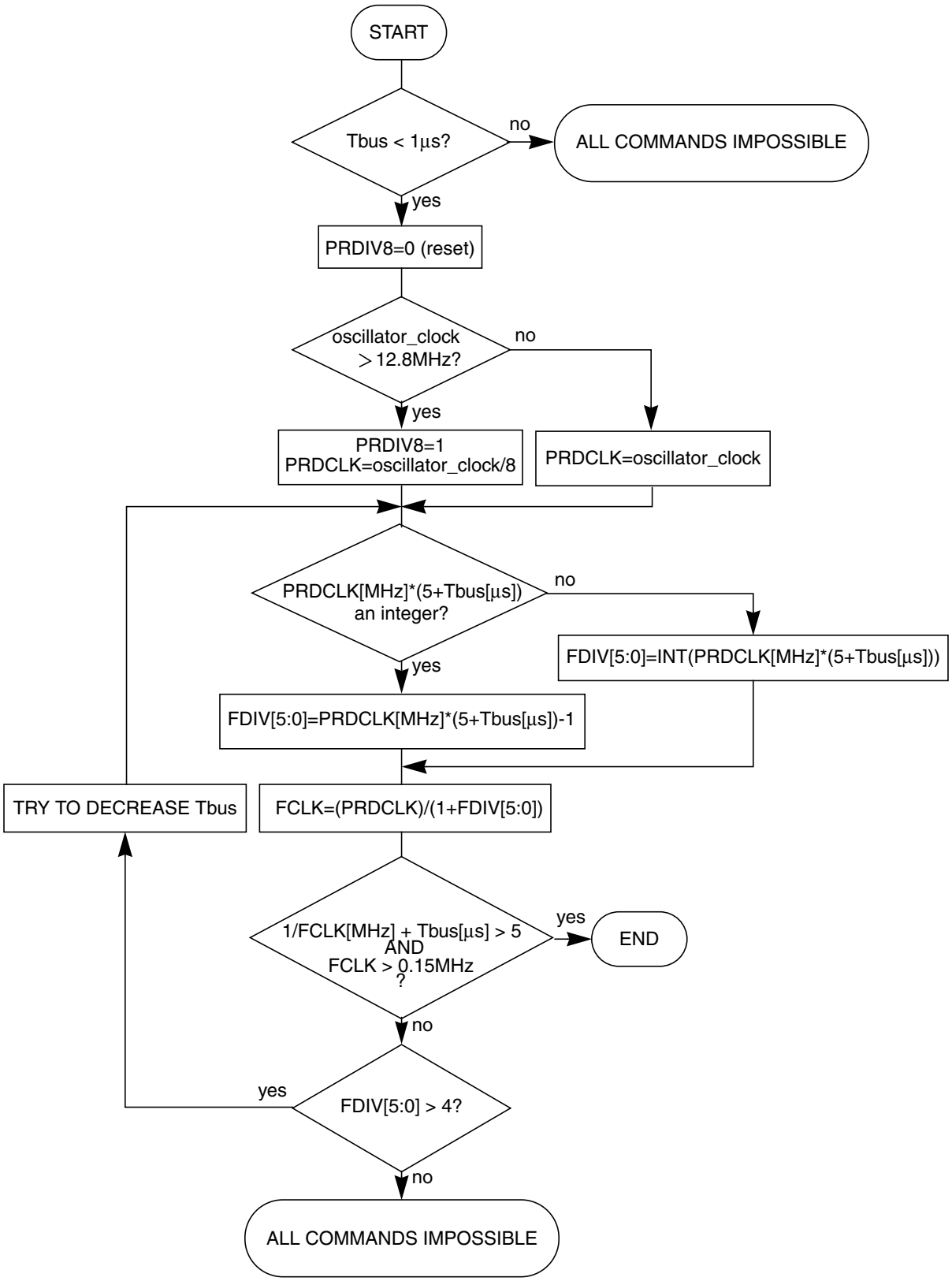


**Figure 19-24. PRDIV8 and FDIV Bits Determination Procedure**

#### 19.4.1.2 Command Write Sequence

The Flash command controller is used to supervise the command write sequence to execute program, erase, and erase verify algorithms.

Before starting a command write sequence, the ACCERR and PVIOL flags in the FSTAT register must be clear and the CBEIF flag should be tested to determine the state of the address, data, and command buffers. If the CBEIF flag is set, indicating the buffers are empty, a new command write sequence can be started. If the CBEIF flag is clear, indicating the buffers are not available, a new command write sequence will overwrite the contents of the address, data, and command buffers.

A command write sequence consists of three steps which must be strictly adhered to with writes to the Flash module not permitted between the steps. However, Flash register and array reads are allowed during a command write sequence. The basic command write sequence is as follows:

1. Write to a valid address in the Flash array memory.
2. Write a valid command to the FCMD register.
3. Clear the CBEIF flag in the FSTAT register by writing a 1 to CBEIF to launch the command.

The address written in step 1 will be stored in the FADDR registers and the data will be stored in the FDATA registers. When the CBEIF flag is cleared in step 3, the CCIF flag is cleared by the Flash command controller indicating that the command was successfully launched. For all command write sequences, the CBEIF flag will set after the CCIF flag is cleared indicating that the address, data, and command buffers are ready for a new command write sequence to begin. A buffered command will wait for the active operation to be completed before being launched. Once a command is launched, the completion of the command operation is indicated by the setting of the CCIF flag in the FSTAT register. The CCIF flag will set upon completion of all active and buffered commands.

#### 19.4.1.3 Valid Flash Commands

Table 19-17 summarizes the valid Flash commands along with the effects of the commands on the Flash array.

**Table 19-17. Valid Flash Commands**

| FCMD | Meaning | Function on Flash Array |
|---|---|---|
| 0x05 | Erase Verify | Verify all bytes in the Flash array are erased.<br>If the Flash array is erased, the BLANK bit will set in the FSTAT register upon command completion. |
| 0x20 | Program | Program a word (2 bytes) in the Flash array. |
| 0x40 | Sector Erase | Erase all 1024 bytes in a sector of the Flash array. |
| 0x41 | Mass Erase | Erase all bytes in the Flash array.<br>A mass erase of the full Flash array is only possible when FPLDIS, FPHDIS, and FPOPEN bits in the FPROT register are set prior to launching the command. |

**CAUTION**

A Flash word must be in the erased state before being programmed. Cumulative programming of bits within a Flash word is not allowed.

#### 19.4.1.3.1 Erase Verify Command

The erase verify operation will verify that a Flash array is erased.

An example flow to execute the erase verify operation is shown in Figure 19-25. The erase verify command write sequence is as follows:

1. Write to a Flash array address to start the command write sequence for the erase verify command. The address and data written will be ignored.
2. Write the erase verify command, 0x05, to the FCMD register.
3. Clear the CBEIF flag in the FSTAT register by writing a 1 to CBEIF to launch the erase verify command.

After launching the erase verify command, the CCIF flag in the FSTAT register will set after the operation has completed unless a new command write sequence has been buffered. Upon completion of the erase verify operation, the BLANK flag in the FSTAT register will be set if all addresses in the Flash array are verified to be erased. If any address in the Flash array is not erased, the erase verify operation will terminate and the BLANK flag in the FSTAT register will remain clear.

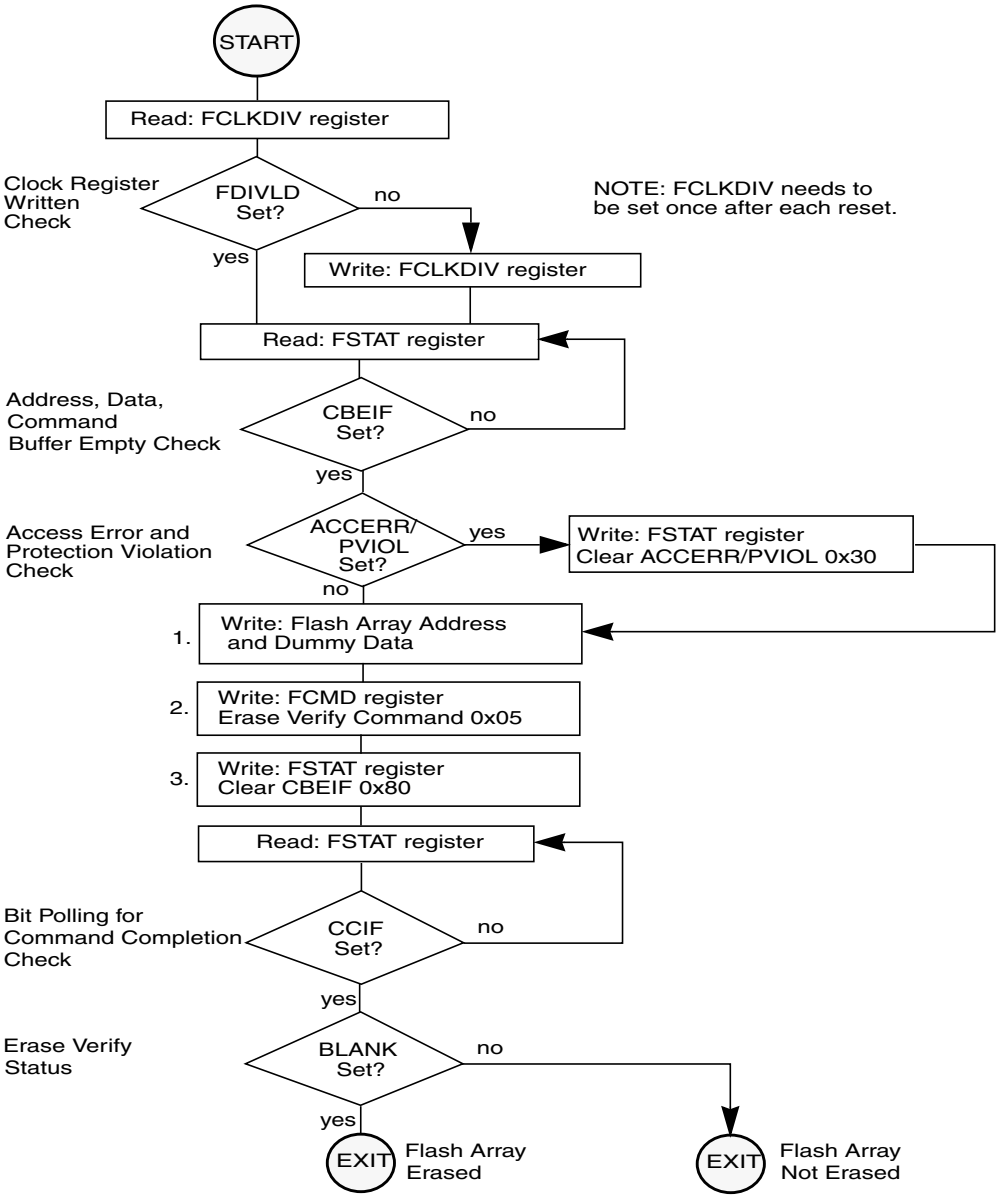


**Figure 19-25. Example Erase Verify Command Flow**

#### 19.4.1.3.2 Program Command

The program operation will program a previously erased word in the Flash array using an embedded algorithm.

An example flow to execute the program operation is shown in Figure 19-26. The program command write sequence is as follows:

1. Write to a Flash array address to start the command write sequence for the program command. The data written will be programmed to the Flash array address written.
2. Write the program command, 0x20, to the FCMD register.
3. Clear the CBEIF flag in the FSTAT register by writing a 1 to CBEIF to launch the program command.

If a word to be programmed is in a protected area of the Flash array, the PVIOL flag in the FSTAT register will set and the program command will not launch. Once the program command has successfully launched, the CCIF flag in the FSTAT register will set after the program operation has completed unless a new command write sequence has been buffered. By executing a new program command write sequence on sequential words after the CBEIF flag in the FSTAT register has been set, up to 55% faster programming time per word can be effectively achieved than by waiting for the CCIF flag to set after each program operation.

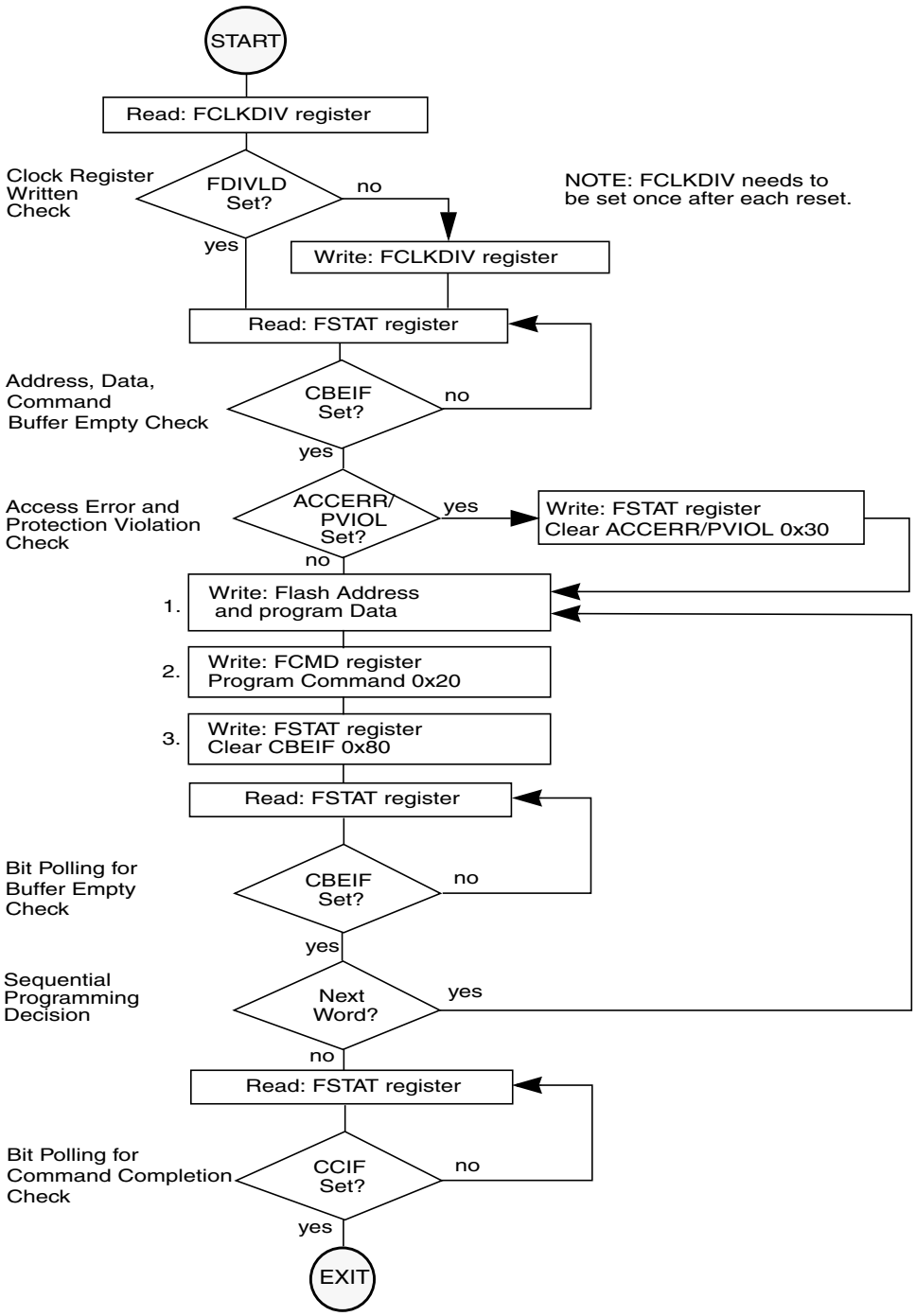


**Figure 19-26. Example Program Command Flow**

#### 19.4.1.3.3 Sector Erase Command

The sector erase operation will erase all addresses in a 1024 byte sector of the Flash array using an embedded algorithm.

An example flow to execute the sector erase operation is shown in Figure 19-27. The sector erase command write sequence is as follows:

1. Write to a Flash array address to start the command write sequence for the sector erase command. The Flash address written determines the sector to be erased while MCU address bits [9:0] and the data written are ignored.
2. Write the sector erase command, 0x40, to the FCMD register.
3. Clear the CBEIF flag in the FSTAT register by writing a 1 to CBEIF to launch the sector erase command.

If a Flash sector to be erased is in a protected area of the Flash array, the PVIOL flag in the FSTAT register will set and the sector erase command will not launch. Once the sector erase command has successfully launched, the CCIF flag in the FSTAT register will set after the sector erase operation has completed unless a new command write sequence has been buffered.

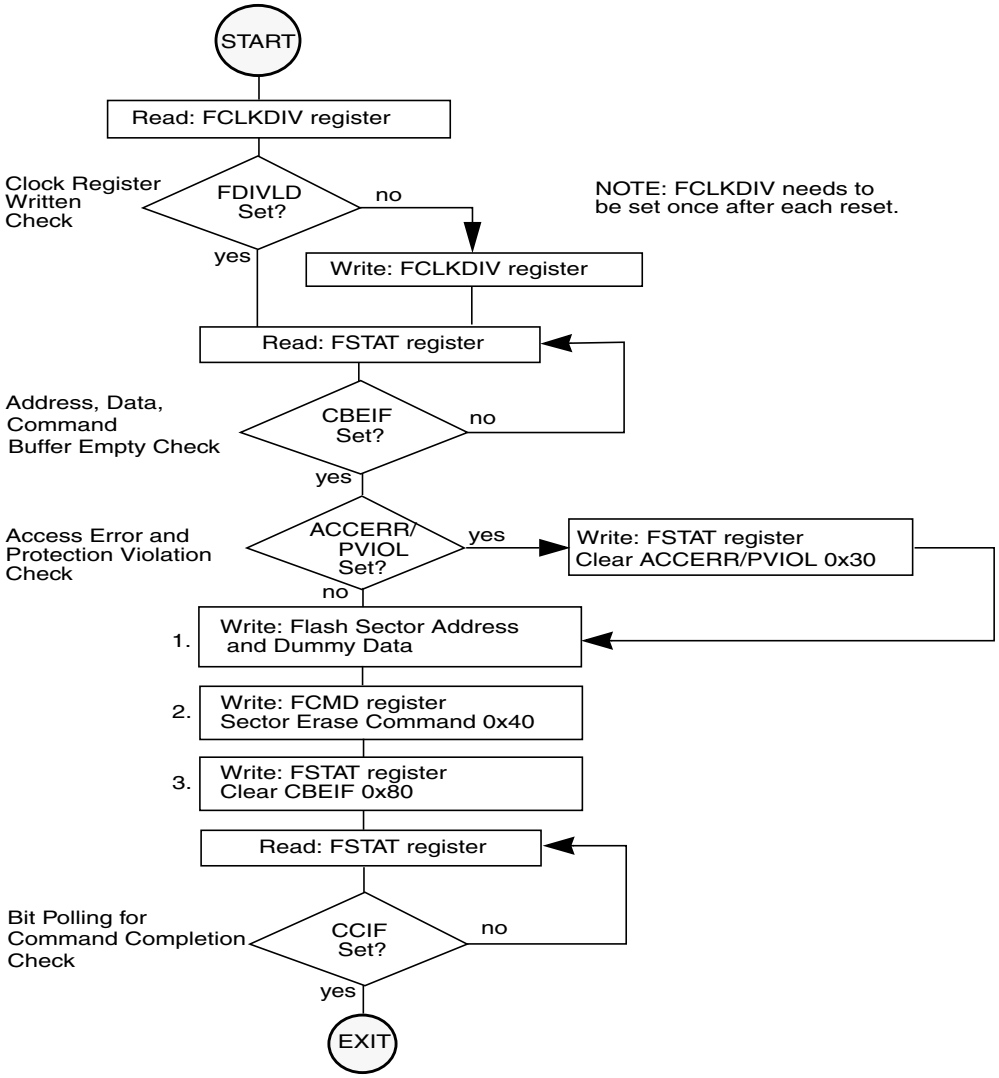


**Figure 19-27. Example Sector Erase Command Flow**

#### 19.4.1.3.4 Mass Erase Command

The mass erase operation will erase all addresses in a Flash array using an embedded algorithm.

An example flow to execute the mass erase operation is shown in Figure 19-28. The mass erase command write sequence is as follows:

1. Write to a Flash array address to start the command write sequence for the mass erase command. The address and data written will be ignored.
2. Write the mass erase command, 0x41, to the FCMD register.
3. Clear the CBEIF flag in the FSTAT register by writing a 1 to CBEIF to launch the mass erase command.

If a Flash array to be erased contains any protected area, the PVIOL flag in the FSTAT register will set and the mass erase command will not launch. Once the mass erase command has successfully launched, the CCIF flag in the FSTAT register will set after the mass erase operation has completed unless a new command write sequence has been buffered.

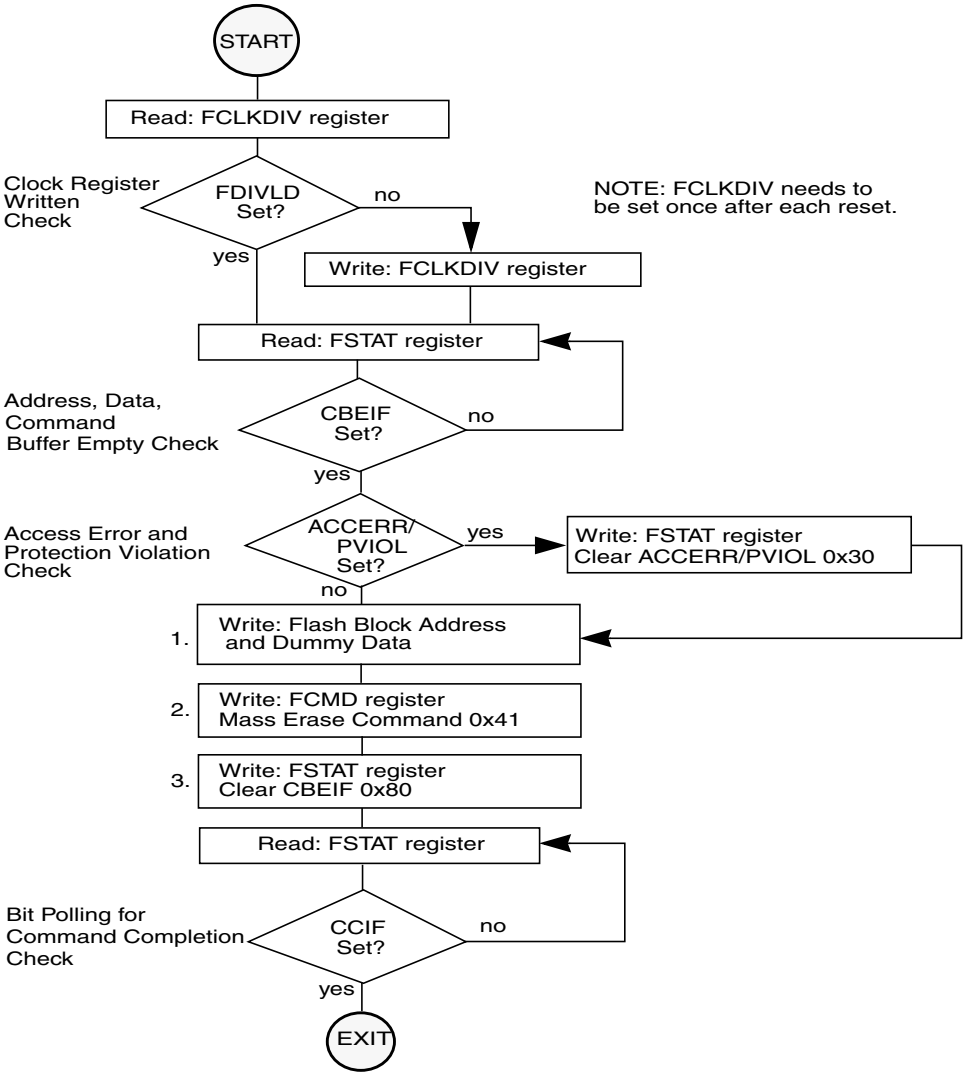


**Figure 19-28. Example Mass Erase Command Flow**

#### 19.4.1.4 Illegal Flash Operations

##### 19.4.1.4.1 Access Error

The ACCERR flag in the FSTAT register will be set during the command write sequence if any of the following illegal Flash operations are performed causing the command write sequence to immediately abort:

1. Writing to the Flash address space before initializing the FCLKDIV register
2. Writing a misaligned word or a byte to the valid Flash address space
3. Writing to the Flash address space while CBEIF is not set
4. Writing a second word to the Flash address space before executing a program or erase command on the previously written word
5. Writing to any Flash register other than FCMD after writing a word to the Flash address space
6. Writing a second command to the FCMD register before executing the previously written command
7. Writing an invalid command to the FCMD register
8. Writing to any Flash register other than FSTAT (to clear CBEIF) after writing to the FCMD register
9. The part enters stop mode and a program or erase command is in progress. The command is aborted and any pending command is killed
10. When security is enabled, a command other than mass erase originating from a non-secure memory or from the background debug mode is written to the FCMD register
11. A 0 is written to the CBEIF bit in the FSTAT register to abort a command write sequence.

The ACCERR flag will not be set if any Flash register is read during the command write sequence. If the Flash array is read during execution of an algorithm (CCIF=0), the Flash module will return invalid data and the ACCERR flag will not be set. If an ACCERR flag is set in the FSTAT register, the Flash command controller is locked. It is not possible to launch another command until the ACCERR flag is cleared.

##### 19.4.1.4.2 Protection Violation

The PVIOL flag in the FSTAT register will be set during the command write sequence after the word write to the Flash address space if any of the following illegal Flash operations are performed, causing the command write sequence to immediately abort:

1. Writing a Flash address to program in a protected area of the Flash array (see Section 19.3.2.5).
2. Writing a Flash address to erase in a protected area of the Flash array.
3. Writing the mass erase command to the FCMD register while any protection is enabled.

If the PVIOL flag is set, the Flash command controller is locked. It is not possible to launch another command until the PVIOL flag is cleared.

## 19.4.2 Operating Modes

### 19.4.2.1 Wait Mode

If the MCU enters wait mode while a Flash command is active (CCIF = 0), that command and any buffered command will be completed.

The Flash module can recover the MCU from wait mode if the interrupts are enabled (see Section 19.4.5).

### 19.4.2.2 Stop Mode

If the MCU enters stop mode while a Flash command is active (CCIF = 0), that command will be aborted and the data being programmed or erased is lost. The high voltage circuitry to the Flash array will be switched off when entering stop mode. CCIF and ACCERR flags will be set. Upon exit from stop mode, the CBEIF flag will be set and any buffered command will not be executed. The ACCERR flag must be cleared before returning to normal operation.

**NOTE**

As active Flash commands are immediately aborted when the MCU enters stop mode, it is strongly recommended that the user does not use the STOP instruction during program and erase execution.

### 19.4.2.3 Background Debug Mode

In background debug mode (BDM), the FPROT register is writable. If the MCU is unsecured, then all Flash commands listed in Table 19-17 can be executed. If the MCU is secured and is in special single chip mode, the only possible command to execute is mass erase.

## 19.4.3 Flash Module Security

The Flash module provides the necessary security information to the MCU. After each reset, the Flash module determines the security state of the MCU as defined in Section 19.3.2.2, “Flash Security Register (FSEC)”.

The contents of the Flash security/options byte at address 0xFF0F in the Flash configuration field must be changed directly by programming address 0xFF0F when the device is unsecured and the higher address sector is unprotected. If the Flash security/options byte is left in the secure state, any reset will cause the MCU to return to the secure operating mode.

### 19.4.3.1 Unsecuring the MCU using Backdoor Key Access

The MCU may only be unsecured by using the backdoor key access feature which requires knowledge of the contents of the backdoor key (four 16-bit words programmed at addresses 0xFF00–0xFF07). If KEYEN[1:0] = 1:0 and the KEYACC bit is set, a write to a backdoor key address in the Flash array triggers a comparison between the written data and the backdoor key data stored in the Flash array. If all four words of data are written to the correct addresses in the correct order and the data matches the backdoor key stored in the Flash array, the MCU will be unsecured. The data must be written to the backdoor key

addresses sequentially staring with 0xFF00-0xFF01 and ending with 0xFF06–0xFF07. The values 0x0000 and 0xFFFF are not permitted as keys. When the KEYACC bit is set, reads of the Flash array will return invalid data.

The user code stored in the Flash array must have a method of receiving the backdoor key from an external stimulus. This external stimulus would typically be through one of the on-chip serial ports.

If KEYEN[1:0] = 1:0 in the FSEC register, the MCU can be unsecured by the backdoor key access sequence described below:

1. Set the KEYACC bit in the FCNFG register
2. Write the correct four 16-bit words to Flash addresses 0xFF00–0xFF07 sequentially starting with 0xFF00
3. Clear the KEYACC bit in the FCNFG register
4. If all four 16-bit words match the backdoor key stored in Flash addresses 0xFF00–0xFF07, the MCU is unsecured and bits SEC[1:0] in the FSEC register are forced to the unsecure state of 1:0

The backdoor key access sequence is monitored by the internal security state machine. An illegal operation during the backdoor key access sequence will cause the security state machine to lock, leaving the MCU in the secured state. A reset of the MCU will cause the security state machine to exit the lock state and allow a new backdoor key access sequence to be attempted. The following illegal operations will lock the security state machine:

1. If any of the four 16-bit words does not match the backdoor key programmed in the Flash array
2. If the four 16-bit words are written in the wrong sequence
3. If more than four 16-bit words are written
4. If any of the four 16-bit words written are 0x0000 or 0xFFFF
5. If the KEYACC bit does not remain set while the four 16-bit words are written

After the backdoor key access sequence has been correctly matched, the MCU will be unsecured. The Flash security byte can be programmed to the unsecure state, if desired.

In the unsecure state, the user has full control of the contents of the four word backdoor key by programming bytes 0xFF00–0xFF07 of the Flash configuration field.

The security as defined in the Flash security/options byte at address 0xFF0F is not changed by using the backdoor key access sequence to unsecure. The backdoor key stored in addresses 0xFF00–0xFF07 is unaffected by the backdoor key access sequence. After the next reset sequence, the security state of the Flash module is determined by the Flash security/options byte at address 0xFF0F. The backdoor key access sequence has no effect on the program and erase protection defined in the FPROT register.

It is not possible to unsecure the MCU in special single chip mode by executing the backdoor key access sequence in background debug mode.

### 19.4.4 Flash Reset Sequence

On each reset, the Flash module executes a reset sequence to hold CPU activity while loading the following registers from the Flash array memory according to Table 19-1:

- FPROT — Flash Protection Register (see Section 19.3.2.5)
- FSEC — Flash Security Register (see Section 19.3.2.2)

#### 19.4.4.1 Reset While Flash Command Active

If a reset occurs while any Flash command is in progress, that command will be immediately aborted. The state of the word being programmed or the sector/array being erased is not guaranteed.

### 19.4.5 Interrupts

The Flash module can generate an interrupt when all Flash commands have completed execution or the Flash address, data, and command buffers are empty.

**Table 19-18. Flash Interrupt Sources**

| Interrupt Source | Interrupt Flag | Local Enable | Global (CCR) Mask |
|---|---|---|---|
| Flash Address, Data, and Command Buffers are empty | CBEIF (FSTAT register) | CBEIE | I Bit |
| All Flash commands have completed execution | CCIF (FSTAT register) | CCIE | I Bit |

**NOTE**

Vector addresses and their relative interrupt priority are determined at the MCU level.

#### 19.4.5.1 Description of Interrupt Operation

Figure 19-29 shows the logic used for generating interrupts.

The Flash module uses the CBEIF and CCIF flags in combination with the enable bits CBIE and CCIE to discriminate for the generation of interrupts.

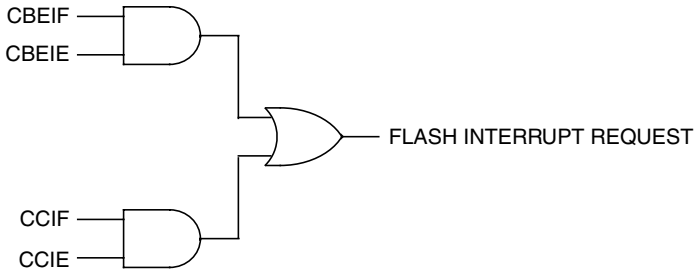


**Figure 19-29. Flash Interrupt Implementation**

For a detailed description of these register bits, refer to Section 19.3.2.4, “Flash Configuration Register (FCNFG)” and Section 19.3.2.6, “Flash Status Register (FSTAT)”.

# Chapter 20
# 96 Kbyte Flash Module (S12FTS96KV1)

## 20.1 Introduction

The FTS128K1FTS96K module implements a 12896 Kbyte Flash (nonvolatile) memory. The Flash memory contains one array of 12896 Kbytes organized as 1024768 rows of 128128 bytes with an erase sector size of eight rows (10241024 bytes). The Flash array may be read as either bytes, aligned words, or misaligned words. Read access time is one bus cycle for byte and aligned word, and two bus cycles for misaligned words.

The Flash array is ideal for program and data storage for single-supply applications allowing for field reprogramming without requiring external voltage sources for program or erase. Program and erase functions are controlled by a command driven interface. The Flash module supports both mass erase and sector erase. An erased bit reads 1 and a programmed bit reads 0. The high voltage required to program and erase is generated internally. It is not possible to read from a Flash array while it is being erased or programmed.

**CAUTION**

A Flash word must be in the erased state before being programmed.
Cumulative programming of bits within a Flash word is not allowed.

### 20.1.1 Glossary

**Command Write Sequence** — A three-step MCU instruction sequence to program, erase, or erase verify the Flash array memory.

### 20.1.2 Features

- 12896 Kbytes of Flash memory comprised of one 12896 Kbyte array divided into 12896 sectors of 10241024 bytes
- Automated program and erase algorithm
- Interrupts on Flash command completion and command buffer empty
- Fast sector erase and word program operation
- 2-stage command pipeline for faster multi-word program times
- Flexible protection scheme to prevent accidental program or erase
- Single power supply for Flash program and erase operations
- Security feature to prevent unauthorized access to the Flash array memory

### 20.1.3 Modes of Operation

See Section 20.4.2, “Operating Modes” for a description of the Flash module operating modes. For program and erase operations, refer to Section 20.4.1, “Flash Command Operations”.

### 20.1.4 Block Diagram

Figure 20-1Figure 20-2 shows a block diagram of the FTS128K1FTS96K module.

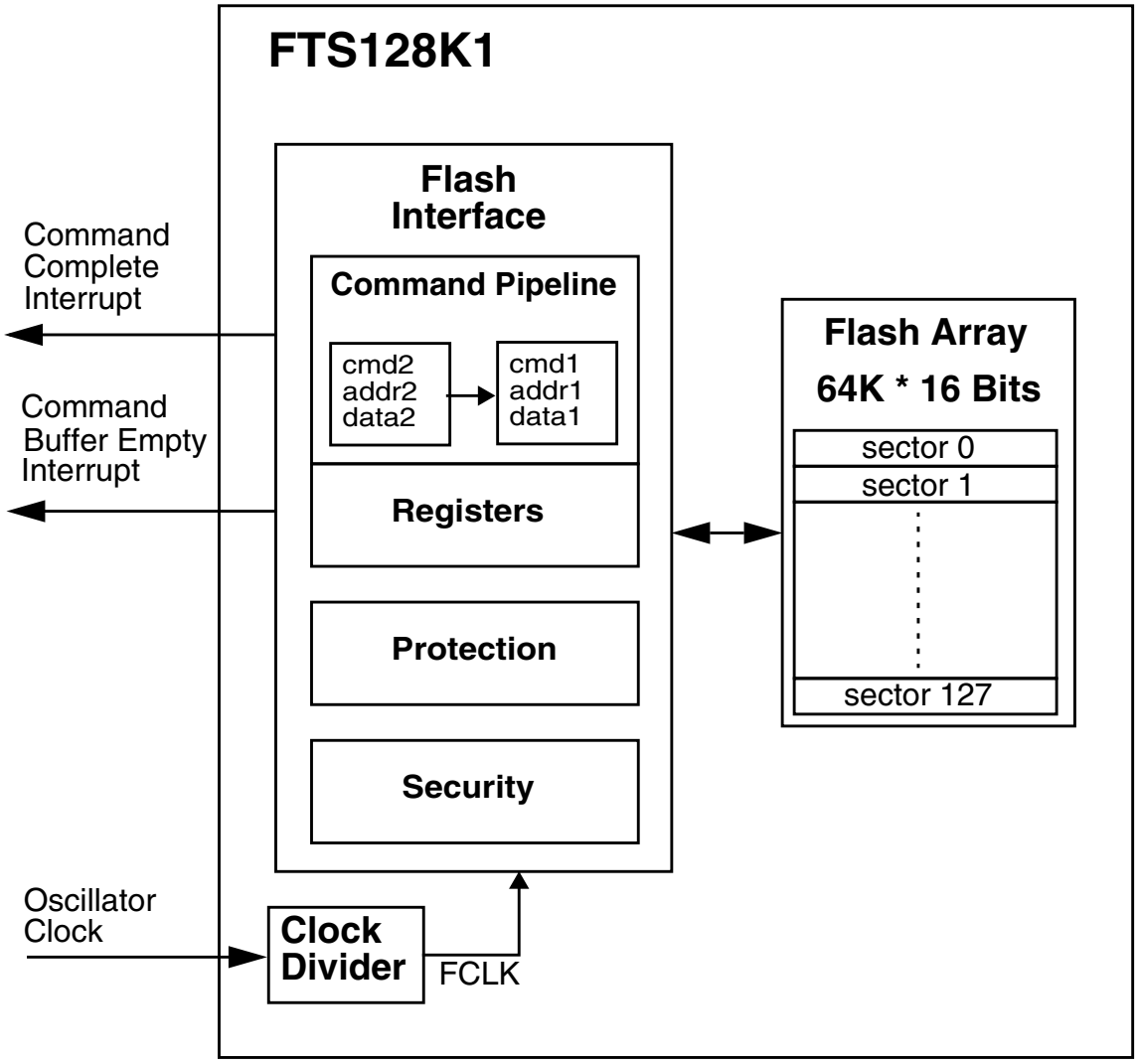


Figure 20-1. FTS128K1 Block Diagram

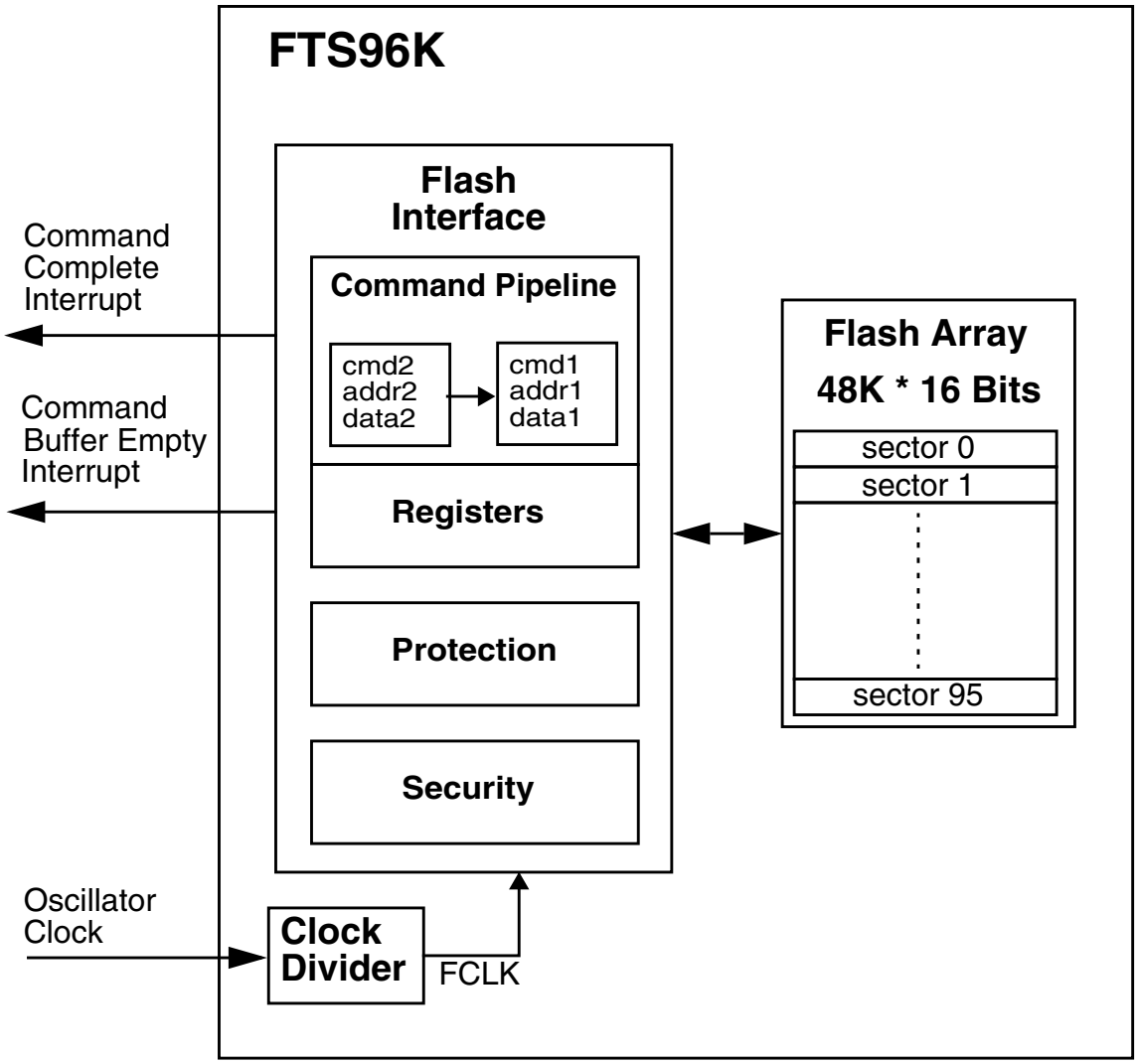


Figure 20-2. FTS96K Block Diagram

## 20.2 External Signal Description

The FTS128K1FTS96K module contains no signals that connect off-chip.

## 20.3 Memory Map and Registers

This section describes the FTS128K1FTS96K memory map and registers.

### 20.3.1 Module Memory Map

The FTS128K1FTS96K memory map is shown in Figure 20-3Figure 20-4. The HCS12 architecture places the Flash array addresses between 0x40000x4000 and 0xFFFF, which corresponds to three 16 Kbyte pages. The content of the HCS12 Core PPAGE register is used to map the logical middle page ranging from

address 0x8000 to 0xBFFF to any physical 16K byte page in the Flash array memory.[1] The FPROT register (see Section 20.3.2.5) can be set to globally protect the entire Flash array. Three separate areas, one starting from the Flash array starting address (called lower) towards higher addresses, one growing downward from the Flash array end address (called higher), and the remaining addresses, can be activated for protection. The Flash array addresses covered by these protectable regions are shown in Figure 20-3Figure 20-4. The higher address area is mainly targeted to hold the boot loader code since it covers the vector space. The lower address area can be used for EEPROM emulation in an MCU without an EEPROM module since it can be left unprotected while the remaining addresses are protected from program or erase. Default protection settings as well as security information that allows the MCU to restrict access to the Flash module are stored in the Flash configuration field described in Table 20-1.

**Table 20-1. Flash Configuration Field**

| Flash Address | Size (bytes) | Description |
|---|---|---|
| 0xFF00–0xFF07 | 8 | Backdoor Key to unlock security |
| 0xFF08–0xFF0C | 5 | Reserved |
| 0xFF0D | 1 | Flash Protection byte<br>Refer to Section 20.3.2.5, “Flash Protection Register (FPROT)” |
| 0xFF0E | 1 | Reserved |
| 0xFF0F | 1 | Flash Security/Options byte<br>Refer to Section 20.3.2.2, “Flash Security Register (FSEC)” |

1. By placing 0x3E/0x3F in the HCS12 Core PPAGE register, the bottom/top fixed 16 Kbyte pages can be seen twice in the MCU memory map.

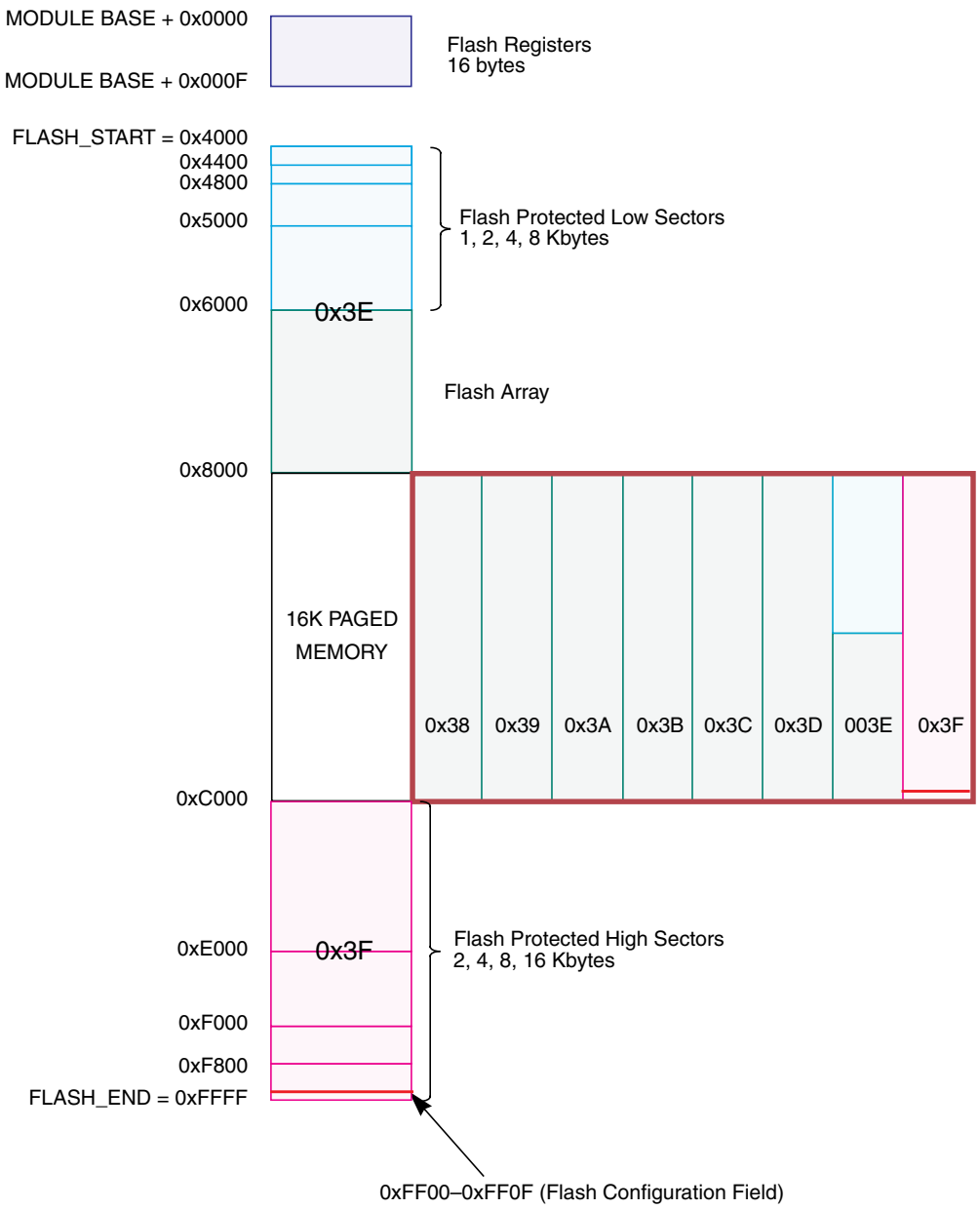


Note: 0x38–0x3F correspond to the PPAGE register content

**Figure 20-3. Flash Memory Map**

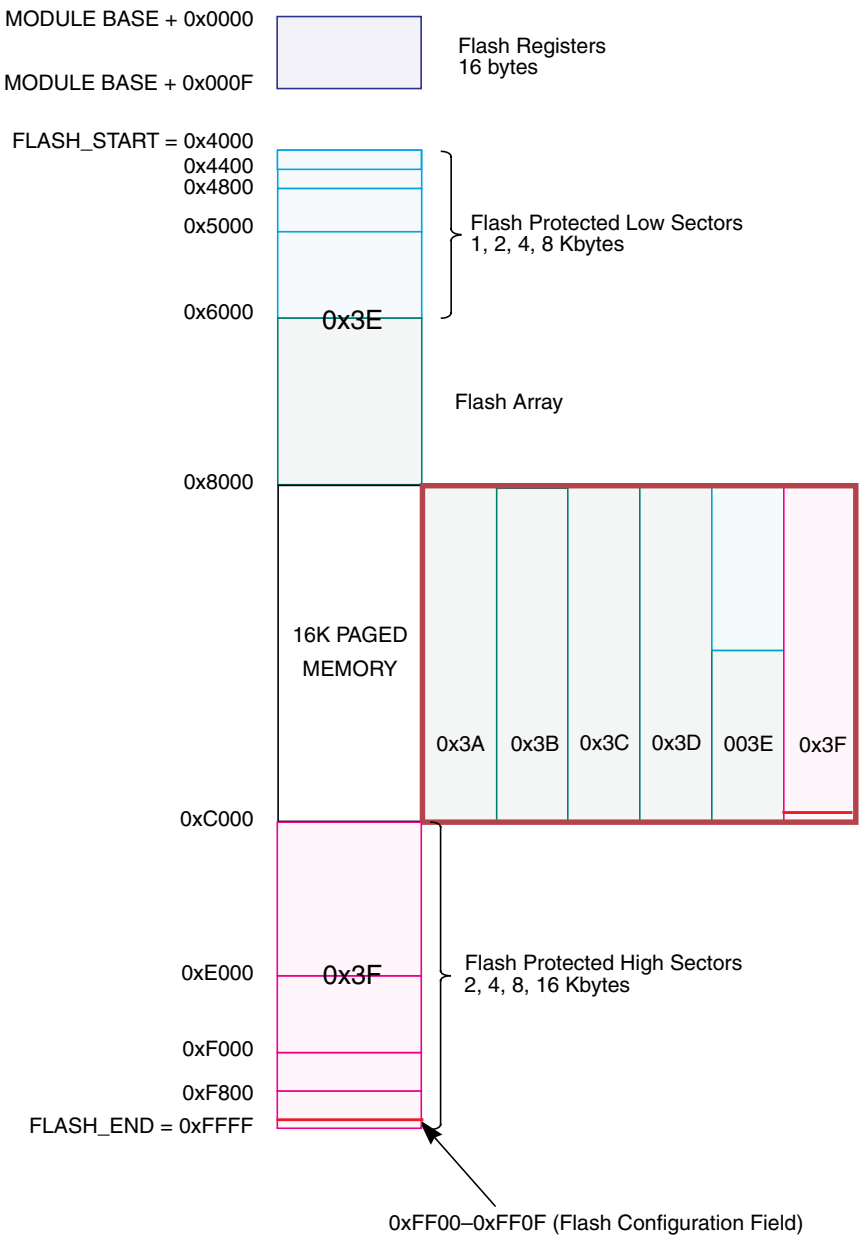


Note: 0x3A–0x3F correspond to the PPAGE register content

**Figure 20-4. Flash Memory Map**

**Table 20-2. Flash Array Memory Map Summary**

| MCU Address Range | PPAGE | Protectable Low Range | Protectable High Range | Array Relative Address[1] |
|---|---|---|---|---|
| 0x0000–0x3FFF[2] | Unpaged (0x3D) | N.A. | N.A. | 0x14000–0x17FFF |
| 0x4000–0x7FFF | Unpaged (0x3E) | 0x4000–0x43FF<br>0x4000–0x47FF<br>0x4000–0x4FFF<br>0x4000–0x5FFF | N.A. | 0x18000–0x1BFFF |
| 0x8000–0xBFFF | 0x38 | N.A. | N.A. | 0x00000–0x03FFF |
| | 0x39 | N.A. | N.A. | 0x04000–0x07FFF |
| | 0x3A | N.A. | N.A. | 0x08000–0x0BFFF |
| | 0x3B | N.A. | N.A. | 0x0C000–0x0FFFF |
| | 0x3C | N.A. | N.A. | 0x10000–0x13FFF |
| | 0x3D | N.A. | N.A. | 0x14000–0x17FFF |
| | 0x3E | 0x8000–0x83FF<br>0x8000–0x87FF<br>0x8000–0x8FFF<br>0x8000–0x9FFF | N.A. | 0x18000–0x1BFFF |
| | 0x3F | N.A. | 0xB800–0xBFFF<br>0xB000–0xBFFF<br>0xA000–0xBFFF<br>0x8000–0xBFFF | 0x1C000–0x1FFFF |
| 0xC000–0xFFFF | Unpaged (0x3F) | N.A. | 0xF800–0xFFFF<br>0xF000–0xFFFF<br>0xE000–0xFFFF<br>0xC000–0xFFFF | 0x1C000–0x1FFFF |

1. Inside Flash block.
2. If allowed by MCU.

**Table 20-3. Flash Array Memory Map Summary**

| MCU Address Range | PPAGE | Protectable Low Range | Protectable High Range | Array Relative Address[1] |
|---|---|---|---|---|
| 0x0000–0x3FFF[2] | Unpaged (0x3D) | N.A. | N.A. | 0x14000–0x17FFF |
| 0x4000–0x7FFF | Unpaged (0x3E) | 0x4000–0x43FF<br>0x4000–0x47FF<br>0x4000–0x4FFF<br>0x4000–0x5FFF | N.A. | 0x18000–0x1BFFF |
| 0x8000–0xBFFF | 0x3A | N.A. | N.A. | 0x08000–0x0BFFF |
| | 0x3B | N.A. | N.A. | 0x0C000–0x0FFFF |
| | 0x3C | N.A. | N.A. | 0x10000–0x13FFF |
| | 0x3D | N.A. | N.A. | 0x14000–0x17FFF |
| | 0x3E | 0x8000–0x83FF<br>0x8000–0x87FF<br>0x8000–0x8FFF<br>0x8000–0x9FFF | N.A. | 0x18000–0x1BFFF |
| | 0x3F | N.A. | 0xB800–0xBFFF<br>0xB000–0xBFFF<br>0xA000–0xBFFF<br>0x8000–0xBFFF | 0x1C000–0x1FFFF |
| 0xC000–0xFFFF | Unpaged (0x3F) | N.A. | 0xF800–0xFFFF<br>0xF000–0xFFFF<br>0xE000–0xFFFF<br>0xC000–0xFFFF | 0x1C000–0x1FFFF |

1. Inside Flash block.
2. If allowed by MCU.

## 20.3.2 Register Descriptions

The Flash module contains a set of 16 control and status registers located between module base + 0x0000 and 0x000F. A summary of the Flash module registers is given in Figure 20-5. Detailed descriptions of each register bit are provided.

| Register Name | | Bit 7 | 6 | 5 | 4 | 3 | 2 | 1 | Bit 0 |
|---|---|---|---|---|---|---|---|---|---|
| 0x0000 FCLKDIV | R | FDIVLD | PRDIV8 | FDIV5 | FDIV4 | FDIV3 | FDIV2 | FDIV1 | FDIV0 |
| | W | | | | | | | | |
| 0x0001 FSEC | R | KEYEN1 | KEYEN0 | NV5 | NV4 | NV3 | NV2 | SEC1 | SEC0 |
| | W | | | | | | | | |
| 0x0002 RESERVED1 (1) | R | 0 | 0 | 0 | 0 | 0 | 0 | 0 | 0 |
| | W | | | | | | | | |
| 0x0003 FCNFG | R | CBEIE | CCIE | KEYACC | 0 | 0 | 0 | 0 | 0 |
| | W | | | | | | | | |
| 0x0004 FPROT | R | FPOPEN | NV6 | FPHDIS | FPHS1 | FPHS0 | FPLDIS | FPLS1 | FPLS0 |
| | W | | | | | | | | |
| 0x0005 FSTAT | R | CBEIF | CCIF | PVIOL | ACCERR | 0 | BLANK | FAIL | DONE |
| | W | | | | | | | | |
| 0x0006 FCMD | R | 0 | CMDB6 | CMDB5 | 0 | 0 | CMDB2 | 0 | CMDB0 |
| | W | | | | | | | | |
| 0x0007 RESERVED2[1] | R | 0 | 0 | 0 | 0 | 0 | 0 | 0 | 0 |
| | W | | | | | | | | |
| 0x0008 FADDRHI[1] | R | FABHI | | | | | | | |
| | W | | | | | | | | |
| 0x0009 FADDRLO[1] | R | FABLO | | | | | | | |
| | W | | | | | | | | |
| 0x000A FDATAHI[1] | R | FDHI | | | | | | | |
| | W | | | | | | | | |
| 0x000B FDATALO[1] | R | FDLO | | | | | | | |
| | W | | | | | | | | |
| 0x000C RESERVED3[1] | R | 0 | 0 | 0 | 0 | 0 | 0 | 0 | 0 |
| | W | | | | | | | | |
| 0x000D RESERVED4[1] | R | 0 | 0 | 0 | 0 | 0 | 0 | 0 | 0 |
| | W | | | | | | | | |
| 0x000E RESERVED5[1] | R | 0 | 0 | 0 | 0 | 0 | 0 | 0 | 0 |
| | W | | | | | | | | |
| 0x000F RESERVED6[1] | R | 0 | 0 | 0 | 0 | 0 | 0 | 0 | 0 |
| | W | | | | | | | | |

= Unimplemented or Reserved

**Figure 20-5. Flash Register Summary**

1. Intended for factory test purposes only.

### 20.3.2.1 Flash Clock Divider Register (FCLKDIV)

The FCLKDIV register is used to control timed events in program and erase algorithms.

Module Base + 0x0000

| | 7 | 6 | 5 | 4 | 3 | 2 | 1 | 0 |
|---|---|---|---|---|---|---|---|---|
| R | FDIVLD | PRDIV8 | FDIV5 | FDIV4 | FDIV3 | FDIV2 | FDIV1 | FDIV0 |
| W | | | | | | | | |
| Reset | 0 | 0 | 0 | 0 | 0 | 0 | 0 | 0 |

= Unimplemented or Reserved

**Figure 20-6. Flash Clock Divider Register (FCLKDIV)**

All bits in the FCLKDIV register are readable, bits 6–0 are write once and bit 7 is not writable.

**Table 20-4. FCLKDIV Field Descriptions**

| Field | Description |
|---|---|
| 7<br>FDIVLD | **Clock Divider Loaded**<br>0 FCLKDIV register has not been written<br>1 FCLKDIV register has been written to since the last reset |
| 6<br>PRDIV8 | **Enable Prescalar by 8**<br>0 The oscillator clock is directly fed into the Flash clock divider<br>1 The oscillator clock is divided by 8 before feeding into the Flash clock divider |
| 5–0<br>FDIV[5:0] | **Clock Divider Bits** — The combination of PRDIV8 and FDIV[5:0] must divide the oscillator clock down to a frequency of 150 kHz – 200 kHz. The maximum divide ratio is 512. Refer to Section 20.4.1.1, “Writing the FCLKDIV Register” for more information. |

### 20.3.2.2 Flash Security Register (FSEC)

The FSEC register holds all bits associated with the security of the MCU and Flash module.

Module Base + 0x0001

| | 7 | 6 | 5 | 4 | 3 | 2 | 1 | 0 |
|---|---|---|---|---|---|---|---|---|
| R | KEYEN1 | KEYEN0 | NV5 | NV4 | NV3 | NV2 | SEC1 | SEC0 |
| W | | | | | | | | |
| Reset | F | F | F | F | F | F | F | F |

= Unimplemented or Reserved

**Figure 20-7. Flash Security Register (FSEC)**

All bits in the FSEC register are readable but not writable.

The FSEC register is loaded from the Flash configuration field at 0xFF0F during the reset sequence, indicated by F in Figure 20-7.

**Table 20-5. FSEC Field Descriptions**

| Field | Description |
|---|---|
| 7–6<br>KEYEN[1:0] | **Backdoor Key Security Enable Bits** — The KEYEN[1:0] bits define the enabling of the backdoor key access to the Flash module as shown in Table 20-6. |
| 5–2<br>NV[5:2] | **Nonvolatile Flag Bits** — The NV[5:2] bits are available to the user as nonvolatile flags. |
| 1–0<br>SEC[1:0] | **Flash Security Bits** — The SEC[1:0] bits define the security state of the MCU as shown in Table 20-7. If the Flash module is unsecured using backdoor key access, the SEC[1:0] bits are forced to 1:0. |

**Table 20-6. Flash KEYEN States**

| KEYEN[1:0] | Status of Backdoor Key Access |
|---|---|
| 00 | DISABLED |
| 01[1] | DISABLED |
| 10 | ENABLED |
| 11 | DISABLED |

1. Preferred KEYEN state to disable Backdoor Key Access.

**Table 20-7. Flash Security States**

| SEC[1:0] | Status of Security |
|---|---|
| 00 | Secured |
| 01[1] | Secured |
| 10 | Unsecured |
| 11 | Secured |

1. Preferred SEC state to set MCU to secured state.

The security function in the Flash module is described in Section 20.4.3, “Flash Module Security”.

### 20.3.2.3 RESERVED1

This register is reserved for factory testing and is not accessible to the user.

Module Base + 0x0002

| | 7 | 6 | 5 | 4 | 3 | 2 | 1 | 0 |
|---|---|---|---|---|---|---|---|---|
| R | 0 | 0 | 0 | 0 | 0 | 0 | 0 | 0 |
| W | | | | | | | | |
| Reset | 0 | 0 | 0 | 0 | 0 | 0 | 0 | 0 |

= Unimplemented or Reserved

**Figure 20-8. RESERVED1**

All bits read 0 and are not writable.

### 20.3.2.4 Flash Configuration Register (FCNFG)

The FCNFG register enables the Flash interrupts and gates the security backdoor key writes.

Module Base + 0x0003

| | 7 | 6 | 5 | 4 | 3 | 2 | 1 | 0 |
|---|---|---|---|---|---|---|---|---|
| R | CBEIE | CCIE | KEYACC | 0 | 0 | 0 | 0 | 0 |
| W | | | | | | | | |
| Reset | 0 | 0 | 0 | 0 | 0 | 0 | 0 | 0 |

= Unimplemented or Reserved

**Figure 20-9. Flash Configuration Register (FCNFG)**

CBEIE, CCIE, and KEYACC are readable and writable while remaining bits read 0 and are not writable. KEYACC is only writable if the KEYEN bit in the FSEC register is set to the enabled state (see Section 20.3.2.2).

**Table 20-8. FCNFG Field Descriptions**

| Field | Description |
|---|---|
| 7<br>CBEIE | **Command Buffer Empty Interrupt Enable** — The CBEIE bit enables the interrupts in case of an empty command buffer in the Flash module.<br>0 Command Buffer Empty interrupts disabled<br>1 An interrupt will be requested whenever the CBEIF flag is set (see Section 20.3.2.6) |
| 6<br>CCIE | **Command Complete Interrupt Enable** — The CCIE bit enables the interrupts in case of all commands being completed in the Flash module.<br>0 Command Complete interrupts disabled<br>1 An interrupt will be requested whenever the CCIF flag is set (see Section 20.3.2.6) |
| 5<br>KEYACC | **Enable Security Key Writing**.<br>0 Flash writes are interpreted as the start of a command write sequence<br>1 Writes to the Flash array are interpreted as a backdoor key while reads of the Flash array return invalid data |

### 20.3.2.5 Flash Protection Register (FPROT)

The FPROT register defines which Flash sectors are protected against program or erase.

Module Base + 0x0004

| | 7 | 6 | 5 | 4 | 3 | 2 | 1 | 0 |
|---|---|---|---|---|---|---|---|---|
| R | FPOPEN | NV6 | FPHDIS | FPHS1 | FPHS0 | FPLDIS | FPLS1 | FPLS0 |
| W | | | | | | | | |
| Reset | F | F | F | F | F | F | F | F |

**Figure 20-10. Flash Protection Register (FPROT)**

The FPROT register is readable in normal and special modes. FPOPEN can only be written from a 1 to a 0. FPLS[1:0] can be written anytime until FPLDIS is cleared. FPHS[1:0] can be written anytime until

FPHDIS is cleared. The FPROT register is loaded from Flash address 0xFF0D during the reset sequence, indicated by F in Figure 20-10.

To change the Flash protection that will be loaded on reset, the upper sector of the Flash array must be unprotected, then the Flash protection byte located at Flash address 0xFF0D must be written to.

A protected Flash sector is disabled by FPHDIS and FPLDIS while the size of the protected sector is defined by FPHS[1:0] and FPLS[1:0] in the FPROT register.

Trying to alter any of the protected areas will result in a protect violation error and the PVIOL flag will be set in the FSTAT register (see Section 20.3.2.6). A mass erase of the whole Flash array is only possible when protection is fully disabled by setting the FPOPEN, FPLDIS, and FPHDIS bits. An attempt to mass erase a Flash array while protection is enabled will set the PVIOL flag in the FSTAT register.

**Table 20-9. FPROT Field Descriptions**

| Field | Description |
|---|---|
| 7<br>FPOPEN | **Protection Function for Program or Erase** — It is possible using the FPOPEN bit to either select address ranges to be protected using FPHDIS, FPLDIS, FPHS[1:0] and FPLS[1:0] or to select the same ranges to be unprotected. When FPOPEN is set, FPxDIS enables the ranges to be protected, whereby clearing FPxDIS enables protection for the range specified by the corresponding FPxS[1:0] bits. When FPOPEN is cleared, FPxDIS defines unprotected ranges as specified by the corresponding FPxS[1:0] bits. In this case, setting FPxDIS enables protection. Thus the effective polarity of the FPxDIS bits is swapped by the FPOPEN bit as shown in Table 20-10. This function allows the main part of the Flash array to be protected while a small range can remain unprotected for EEPROM emulation.<br>0 The FPHDIS and FPLDIS bits define Flash address ranges to be unprotected<br>1 The FPHDIS and FPLDIS bits define Flash address ranges to be protected |
| 6<br>NV6 | **Nonvolatile Flag Bit** — The NV6 bit should remain in the erased state for future enhancements. |
| 5<br>FPHDIS | **Flash Protection Higher Address Range Disable** — The FPHDIS bit determines whether there is a protected/unprotected area in the higher space of the Flash address map.<br>0 Protection/unprotection enabled<br>1 Protection/unprotection disabled |
| 4–3<br>FPHS[1:0] | **Flash Protection Higher Address Size** — The FPHS[1:0] bits determine the size of the protected/unprotected sector as shown in Table 20-11. The FPHS[1:0] bits can only be written to while the FPHDIS bit is set. |
| 2<br>FPLDIS | **Flash Protection Lower Address Range Disable** — The FPLDIS bit determines whether there is a protected/unprotected sector in the lower space of the Flash address map.<br>0 Protection/unprotection enabled<br>1 Protection/unprotection disabled |
| 1–0<br>FPLS[1:0] | **Flash Protection Lower Address Size** — The FPLS[1:0] bits determine the size of the protected/unprotected sector as shown in Table 20-12. The FPLS[1:0] bits can only be written to while the FPLDIS bit is set. |

**Table 20-10. Flash Protection Function**

| FPOPEN | FPHDIS | FPHS[1] | FPHS[0] | FPLDIS | FPLS[1] | FPLS[0] | Function[1] |
|---|---|---|---|---|---|---|---|
| 1 | 1 | x | x | 1 | x | x | No protection |
| 1 | 1 | x | x | 0 | x | x | Protect low range |
| 1 | 0 | x | x | 1 | x | x | Protect high range |
| 1 | 0 | x | x | 0 | x | x | Protect high and low ranges |
| 0 | 1 | x | x | 1 | x | x | Full Flash array protected |
| 0 | 0 | x | x | 1 | x | x | Unprotected high range |
| 0 | 1 | x | x | 0 | x | x | Unprotected low range |
| 0 | 0 | x | x | 0 | x | x | Unprotected high and low ranges |

1. For range sizes refer to Table 20-11 and Table 20-12 or .

**Table 20-11. Flash Protection Higher Address Range**

| FPHS[1:0] | Address Range | Range Size |
|---|---|---|
| 00 | 0xF800–0xFFFF | 2 Kbytes |
| 01 | 0xF000–0xFFFF | 4 Kbytes |
| 10 | 0xE000–0xFFFF | 8 Kbytes |
| 11 | 0xC000–0xFFFF | 16 Kbytes |

**Table 20-12. Flash Protection Lower Address Range**

| FPLS[1:0] | Address Range | Range Size |
|---|---|---|
| 00 | 0x4000–0x43FF | 1 Kbyte |
| 01 | 0x4000–0x47FF | 2 Kbytes |
| 10 | 0x4000–0x4FFF | 4 Kbytes |
| 11 | 0x4000–0x5FFF | 8 Kbytes |

Figure 20-11 illustrates all possible protection scenarios. Although the protection scheme is loaded from the Flash array after reset, it is allowed to change in normal modes. This protection scheme can be used by applications requiring re-programming in single chip mode while providing as much protection as possible if no re-programming is required.

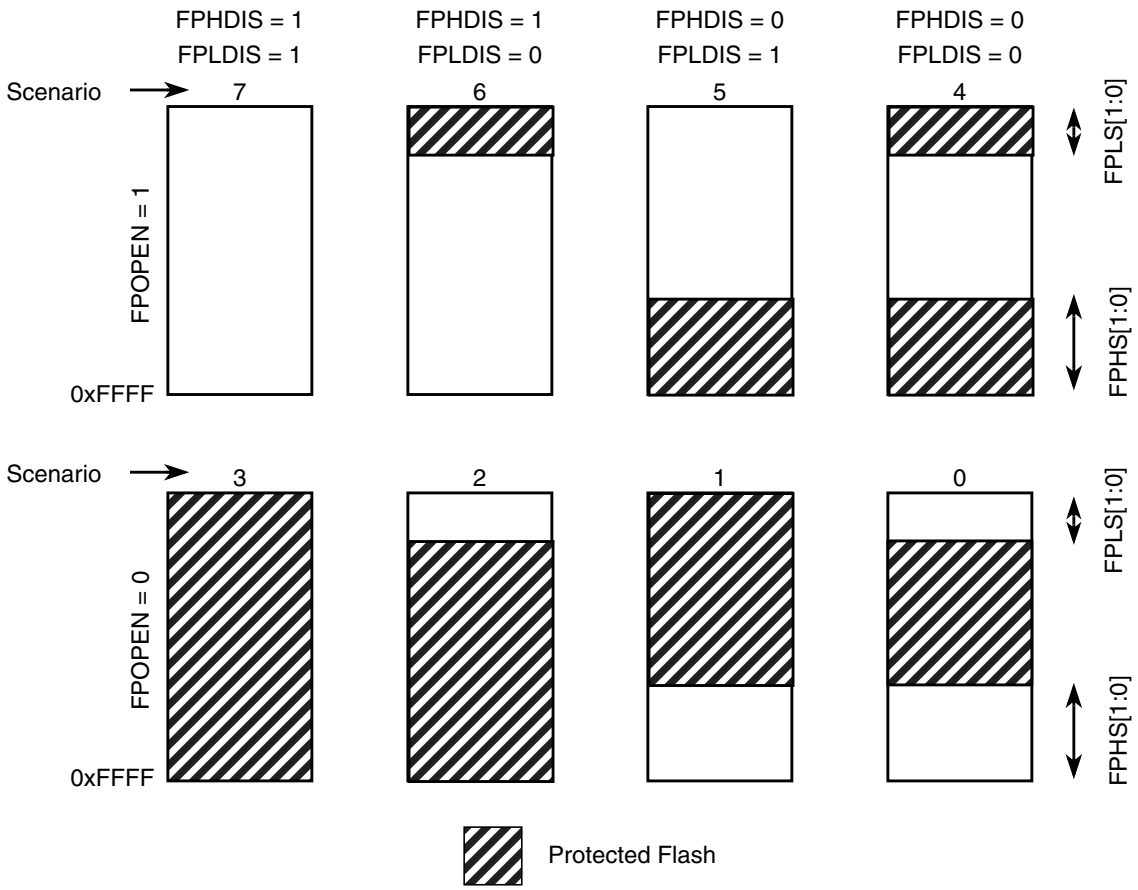


**Figure 20-11. Flash Protection Scenarios**

### 20.3.2.5.1 Flash Protection Restrictions

The general guideline is that protection can only be added, not removed. All valid transitions between Flash protection scenarios are specified in Table 20-13. Any attempt to write an invalid scenario to the FPROT register will be ignored and the FPROT register will remain unchanged. The contents of the FPROT register reflect the active protection scenario.

**Table 20-13. Flash Protection Scenario Transitions**

| From Protection Scenario | To Protection Scenario[1] | | | | | | | |
|---|---|---|---|---|---|---|---|---|
| | 0 | 1 | 2 | 3 | 4 | 5 | 6 | 7 |
| 0 | X | X | X | X | | | | |
| 1 | | X | | X | | | | |
| 2 | | | X | X | | | | |
| 3 | | | | X | | | | |
| 4 | | | | X | X | | | |
| 5 | | | X | X | X | X | | |

**Table 20-13. Flash Protection Scenario Transitions**

| From Protection Scenario | To Protection Scenario[1] | | | | | | | |
|---|---|---|---|---|---|---|---|---|
| | 0 | 1 | 2 | 3 | 4 | 5 | 6 | 7 |
| 6 | | X | | X | X | | X | |
| 7 | X | X | X | X | X | X | X | X |

1. Allowed transitions marked with X.

### 20.3.2.6 Flash Status Register (FSTAT)

The FSTAT register defines the status of the Flash command controller and the results of command execution.

Module Base + 0x0005

| | 7 | 6 | 5 | 4 | 3 | 2 | 1 | 0 |
|---|---|---|---|---|---|---|---|---|
| R | CBEIF | CCIF | PVIOL | ACCERR | 0 | BLANK | FAIL | DONE |
| W | | | | | | | | |
| Reset | 1 | 1 | 0 | 0 | 0 | 0 | 0 | 1 |

= Unimplemented or Reserved

**Figure 20-12. Flash Status Register (FSTAT)**

In normal modes, bits CBEIF, PVIOL, and ACCERR are readable and writable, bits CCIF and BLANK are readable and not writable, remaining bits, including FAIL and DONE, read 0 and are not writable. In special modes, FAIL is readable and writable while DONE is readable but not writable. FAIL must be clear in special modes when starting a command write sequence.

**Table 20-14. FSTAT Field Descriptions**

| Field | Description |
|---|---|
| 7<br>CBEIF | **Command Buffer Empty Interrupt Flag** — The CBEIF flag indicates that the address, data and command buffers are empty so that a new command write sequence can be started. The CBEIF flag is cleared by writing a 1 to CBEIF. Writing a 0 to the CBEIF flag has no effect on CBEIF. Writing a 0 to CBEIF after writing an aligned word to the Flash address space but before CBEIF is cleared will abort a command write sequence and cause the ACCERR flag in the FSTAT register to be set. Writing a 0 to CBEIF outside of a command write sequence will not set the ACCERR flag. The CBEIF flag is used together with the CBEIE bit in the FCNFG register to generate an interrupt request (see Figure 20-28).<br>0 Buffers are full<br>1 Buffers are ready to accept a new command |
| 6<br>CCIF | **Command Complete Interrupt Flag** — The CCIF flag indicates that there are no more commands pending. The CCIF flag is cleared when CBEIF is clear and sets automatically upon completion of all active and pending commands. The CCIF flag does not set when an active commands completes and a pending command is fetched from the command buffer. Writing to the CCIF flag has no effect. The CCIF flag is used together with the CCIE bit in the FCNFG register to generate an interrupt request (see Figure 20-28).<br>0 Command in progress<br>1 All commands are completed |

**Table 20-14. FSTAT Field Descriptions**

| Field | Description |
|---|---|
| 5<br>PVIOL | **Protection Violation** — The PVIOL flag indicates an attempt was made to program or erase an address in a protected Flash array memory area. The PVIOL flag is cleared by writing a 1 to PVIOL. Writing a 0 to the PVIOL flag has no effect on PVIOL. While PVIOL is set, it is not possible to launch another command.<br>0 No protection violation detected<br>1 Protection violation has occurred |
| 4<br>ACCERR | **Access Error** — The ACCERR flag indicates an illegal access to the Flash array caused by either a violation of the command write sequence, issuing an illegal command (illegal combination of the CMDBx bits in the FCMD register) or the execution of a CPU STOP instruction while a command is executing (CCIF=0). The ACCERR flag is cleared by writing a 1 to ACCERR. Writing a 0 to the ACCERR flag has no effect on ACCERR. While ACCERR is set, it is not possible to launch another command.<br>0 No access error detected<br>1 Access error has occurred |
| 2<br>BLANK | **Flash Array Has Been Verified as Erased** — The BLANK flag indicates that an erase verify command has checked the Flash array and found it to be erased. The BLANK flag is cleared by hardware when CBEIF is cleared as part of a new valid command write sequence. Writing to the BLANK flag has no effect on BLANK.<br>0 If an erase verify command has been requested, and the CCIF flag is set, then a 0 in BLANK indicates the array is not erased<br>1 Flash array verifies as erased |
| 1<br>FAIL | **Flag Indicating a Failed Flash Operation** — In special modes, the FAIL flag will set if the erase verify operation fails (Flash array verified as not erased). Writing a 0 to the FAIL flag has no effect on FAIL. The FAIL flag is cleared by writing a 1 to FAIL. While FAIL is set, it is not possible to launch another command.<br>0 Flash operation completed without error<br>1 Flash operation failed |
| 0<br>DONE | **Flag Indicating a Failed Operation is not Active** — In special modes, the DONE flag will clear if a program, erase, or erase verify operation is active.<br>0 Flash operation is active<br>1 Flash operation is not active |

### 20.3.2.7 Flash Command Register (FCMD)

The FCMD register defines the Flash commands.

Module Base + 0x0006

| | 7 | 6 | 5 | 4 | 3 | 2 | 1 | 0 |
|---|---|---|---|---|---|---|---|---|
| R | 0 | CMDB6 | CMDB5 | 0 | 0 | CMDB2 | 0 | CMDB0 |
| W | | | | | | | | |
| Reset | 0 | 0 | 0 | 0 | 0 | 0 | 0 | 0 |

= Unimplemented or Reserved

**Figure 20-13. Flash Command Register (FCMD)**

Bits CMDB6, CMDB5, CMDB2, and CMDB0 are readable and writable during a command write sequence while bits 7, 4, 3, and 1 read 0 and are not writable.

**Table 20-15. FCMD Field Descriptions**

| Field | Description |
|---|---|
| 6, 5, 2, 0<br>CMDB[6:5]<br>CMDB[2]<br>CMDB[0] | Valid Flash commands are shown in Table 20-16. An attempt to execute any command other than those listed in Table 20-16 will set the ACCERR bit in the FSTAT register (see Section 20.3.2.6). |

**Table 20-16. Valid Flash Command List**

| CMDB | NVM Command |
|---|---|
| 0x05 | Erase verify |
| 0x20 | Word program |
| 0x40 | Sector erase |
| 0x41 | Mass erase |

### 20.3.2.8 RESERVED2

This register is reserved for factory testing and is not accessible to the user.

Module Base + 0x0007

| | 7 | 6 | 5 | 4 | 3 | 2 | 1 | 0 |
|---|---|---|---|---|---|---|---|---|
| R | 0 | 0 | 0 | 0 | 0 | 0 | 0 | 0 |
| W | | | | | | | | |
| Reset | 0 | 0 | 0 | 0 | 0 | 0 | 0 | 0 |

= Unimplemented or Reserved

**Figure 20-14. RESERVED2**

All bits read 0 and are not writable.

### 20.3.2.9 Flash Address Register (FADDR)

FADDRHI and FADDRLO are the Flash address registers.

Module Base + 0x0008

| | 7 | 6 | 5 | 4 | 3 | 2 | 1 | 0 |
|---|---|---|---|---|---|---|---|---|
| R<br>W | FABHI | | | | | | | |
| Reset | 0 | 0 | 0 | 0 | 0 | 0 | 0 | 0 |

**Figure 20-15. Flash Address High Register (FADDRHI)**

Module Base + 0x0009

| | 7 | 6 | 5 | 4 | 3 | 2 | 1 | 0 |
|---|---|---|---|---|---|---|---|---|
| R<br>W | FABLO | | | | | | | |
| Reset | 0 | 0 | 0 | 0 | 0 | 0 | 0 | 0 |

**Figure 20-16. Flash Address Low Register (FADDRLO)**

In normal modes, all FABHI and FABLO bits read 0 and are not writable. In special modes, the FABHI and FABLO bits are readable and writable. For sector erase, the MCU address bits [9:0] are ignored. For mass erase, any address within the Flash array is valid to start the command.

### 20.3.2.10 Flash Data Register (FDATA)

FDATAHI and FDATALO are the Flash data registers.

Module Base + 0x000A

| | 7 | 6 | 5 | 4 | 3 | 2 | 1 | 0 |
|---|---|---|---|---|---|---|---|---|
| R<br>W | FDHI | | | | | | | |
| Reset | 0 | 0 | 0 | 0 | 0 | 0 | 0 | 0 |

**Figure 20-17. Flash Data High Register (FDATAHI)**

Module Base + 0x000B

| | 7 | 6 | 5 | 4 | 3 | 2 | 1 | 0 |
|---|---|---|---|---|---|---|---|---|
| R<br>W | FDLO | | | | | | | |
| Reset | 0 | 0 | 0 | 0 | 0 | 0 | 0 | 0 |

**Figure 20-18. Flash Data Low Register (FDATALO)**

In normal modes, all FDATAHI and FDATALO bits read 0 and are not writable. In special modes, all FDATAHI and FDATALO bits are readable and writable when writing to an address within the Flash address range.

### 20.3.2.11 RESERVED3

This register is reserved for factory testing and is not accessible to the user.

Module Base + 0x000C

| | 7 | 6 | 5 | 4 | 3 | 2 | 1 | 0 |
|---|---|---|---|---|---|---|---|---|
| R | 0 | 0 | 0 | 0 | 0 | 0 | 0 | 0 |
| W | | | | | | | | |
| Reset | 0 | 0 | 0 | 0 | 0 | 0 | 0 | 0 |

= Unimplemented or Reserved

**Figure 20-19. RESERVED3**

All bits read 0 and are not writable.

### 20.3.2.12 RESERVED4

This register is reserved for factory testing and is not accessible to the user.

Module Base + 0x000D

| | 7 | 6 | 5 | 4 | 3 | 2 | 1 | 0 |
|---|---|---|---|---|---|---|---|---|
| R | 0 | 0 | 0 | 0 | 0 | 0 | 0 | 0 |
| W | | | | | | | | |
| Reset | 0 | 0 | 0 | 0 | 0 | 0 | 0 | 0 |

= Unimplemented or Reserved

**Figure 20-20. RESERVED4**

All bits read 0 and are not writable.

### 20.3.2.13 RESERVED5

This register is reserved for factory testing and is not accessible to the user.

Module Base + 0x000E

| | 7 | 6 | 5 | 4 | 3 | 2 | 1 | 0 |
|---|---|---|---|---|---|---|---|---|
| R | 0 | 0 | 0 | 0 | 0 | 0 | 0 | 0 |
| W | | | | | | | | |
| Reset | 0 | 0 | 0 | 0 | 0 | 0 | 0 | 0 |

= Unimplemented or Reserved

**Figure 20-21. RESERVED5**

All bits read 0 and are not writable.

### 20.3.2.14 RESERVED6

This register is reserved for factory testing and is not accessible to the user.

Module Base + 0x000F

| | 7 | 6 | 5 | 4 | 3 | 2 | 1 | 0 |
|---|---|---|---|---|---|---|---|---|
| R | 0 | 0 | 0 | 0 | 0 | 0 | 0 | 0 |
| W | | | | | | | | |
| Reset | 0 | 0 | 0 | 0 | 0 | 0 | 0 | 0 |

= Unimplemented or Reserved

**Figure 20-22. RESERVED6**

All bits read 0 and are not writable.

## 20.4 Functional Description

### 20.4.1 Flash Command Operations

Write operations are used for the program, erase, and erase verify algorithms described in this section. The program and erase algorithms are controlled by a state machine whose timebase FCLK is derived from the oscillator clock via a programmable divider. The FCMD register as well as the associated FADDR and FDATA registers operate as a buffer and a register (2-stage FIFO) so that a new command along with the necessary data and address can be stored to the buffer while the previous command is still in progress. This pipelined operation allows a time optimization when programming more than one word on a specific row, as the high voltage generation can be kept active in between two programming commands. The pipelined operation also allows a simplification of command launching. Buffer empty as well as command completion are signalled by flags in the FSTAT register with corresponding interrupts generated, if enabled.

The next sections describe:

- How to write the FCLKDIV register
- Command write sequence used to program, erase or erase verify the Flash array
- Valid Flash commands
- Errors resulting from illegal Flash operations

#### 20.4.1.1 Writing the FCLKDIV Register

Prior to issuing any Flash command after a reset, it is first necessary to write the FCLKDIV register to divide the oscillator clock down to within the 150-kHz to 200-kHz range. Since the program and erase timings are also a function of the bus clock, the FCLKDIV determination must take this information into account.

If we define:

- FCLK as the clock of the Flash timing control block
- Tbus as the period of the bus clock
- INT(x) as taking the integer part of x (e.g., INT(4.323) = 4),

then FCLKDIV register bits PRDIV8 and FDIV[5:0] are to be set as described in Figure 20-23.

For example, if the oscillator clock frequency is 950 kHz and the bus clock is 10 MHz, FCLKDIV bits FDIV[5:0] should be set to 4 (000100) and bit PRDIV8 set to 0. The resulting FCLK is then 190 kHz. As a result, the Flash algorithm timings are increased over optimum target by:

$$(200 - 190) / 200 \times 100 = 5\%$$

Command execution time will increase proportionally with the period of FCLK.

**CAUTION**

Because of the impact of clock synchronization on the accuracy of the functional timings, programming or erasing the Flash array cannot be performed if the bus clock runs at less than 1 MHz. Programming or erasing the Flash array with an input clock < 150 kHz should be avoided. Setting FCLKDIV to a value such that FCLK < 150 kHz can destroy the Flash array due to overstress. Setting FCLKDIV to a value such that (1/FCLK + Tbus) < 5µs can result in incomplete programming or erasure of the Flash array cells.

If the FCLKDIV register is written, the bit FDIVLD is set automatically. If the FDIVLD bit is 0, the FCLKDIV register has not been written since the last reset. If the FCLKDIV register has not been written to, the Flash command loaded during a command write sequence will not execute and the ACCERR flag in the FSTAT register will set.

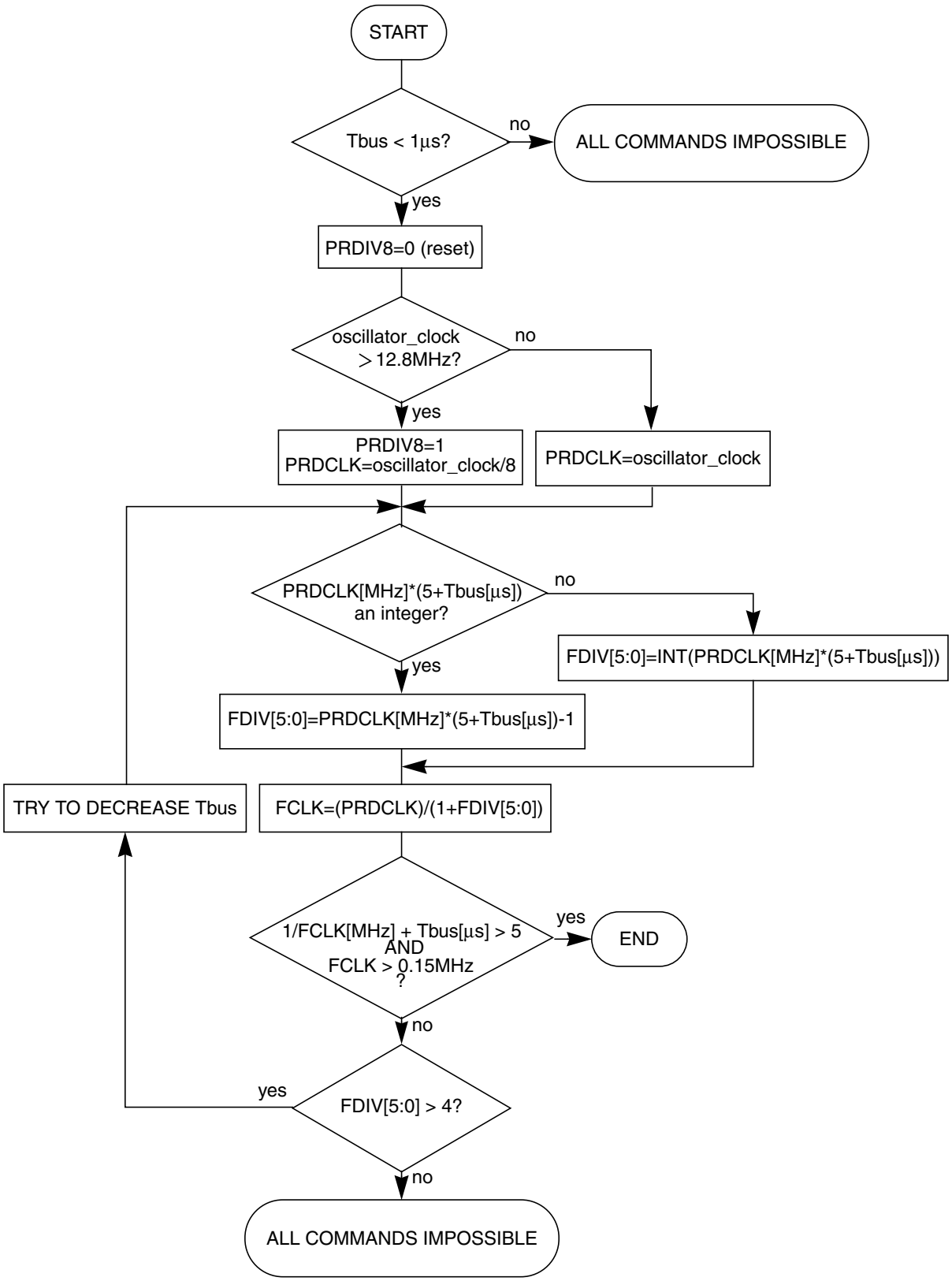


**Figure 20-23. PRDIV8 and FDIV Bits Determination Procedure**

#### 20.4.1.2 Command Write Sequence

The Flash command controller is used to supervise the command write sequence to execute program, erase, and erase verify algorithms.

Before starting a command write sequence, the ACCERR and PVIOL flags in the FSTAT register must be clear and the CBEIF flag should be tested to determine the state of the address, data, and command buffers. If the CBEIF flag is set, indicating the buffers are empty, a new command write sequence can be started. If the CBEIF flag is clear, indicating the buffers are not available, a new command write sequence will overwrite the contents of the address, data, and command buffers.

A command write sequence consists of three steps which must be strictly adhered to with writes to the Flash module not permitted between the steps. However, Flash register and array reads are allowed during a command write sequence. The basic command write sequence is as follows:

1. Write to a valid address in the Flash array memory.
2. Write a valid command to the FCMD register.
3. Clear the CBEIF flag in the FSTAT register by writing a 1 to CBEIF to launch the command.

The address written in step 1 will be stored in the FADDR registers and the data will be stored in the FDATA registers. When the CBEIF flag is cleared in step 3, the CCIF flag is cleared by the Flash command controller indicating that the command was successfully launched. For all command write sequences, the CBEIF flag will set after the CCIF flag is cleared indicating that the address, data, and command buffers are ready for a new command write sequence to begin. A buffered command will wait for the active operation to be completed before being launched. Once a command is launched, the completion of the command operation is indicated by the setting of the CCIF flag in the FSTAT register. The CCIF flag will set upon completion of all active and buffered commands.

#### 20.4.1.3 Valid Flash Commands

Table 20-17 summarizes the valid Flash commands along with the effects of the commands on the Flash array.

**Table 20-17. Valid Flash Commands**

| FCMD | Meaning | Function on Flash Array |
|---|---|---|
| 0x05 | Erase Verify | Verify all bytes in the Flash array are erased.<br>If the Flash array is erased, the BLANK bit will set in the FSTAT register upon command completion. |
| 0x20 | Program | Program a word (2 bytes) in the Flash array. |
| 0x40 | Sector Erase | Erase all 1024 bytes in a sector of the Flash array. |
| 0x41 | Mass Erase | Erase all bytes in the Flash array.<br>A mass erase of the full Flash array is only possible when FPLDIS, FPHDIS, and FPOPEN bits in the FPROT register are set prior to launching the command. |

**CAUTION**

A Flash word must be in the erased state before being programmed. Cumulative programming of bits within a Flash word is not allowed.

#### 20.4.1.3.1 Erase Verify Command

The erase verify operation will verify that a Flash array is erased.

An example flow to execute the erase verify operation is shown in Figure 20-24. The erase verify command write sequence is as follows:

1. Write to a Flash array address to start the command write sequence for the erase verify command. The address and data written will be ignored.
2. Write the erase verify command, 0x05, to the FCMD register.
3. Clear the CBEIF flag in the FSTAT register by writing a 1 to CBEIF to launch the erase verify command.

After launching the erase verify command, the CCIF flag in the FSTAT register will set after the operation has completed unless a new command write sequence has been buffered. Upon completion of the erase verify operation, the BLANK flag in the FSTAT register will be set if all addresses in the Flash array are verified to be erased. If any address in the Flash array is not erased, the erase verify operation will terminate and the BLANK flag in the FSTAT register will remain clear.

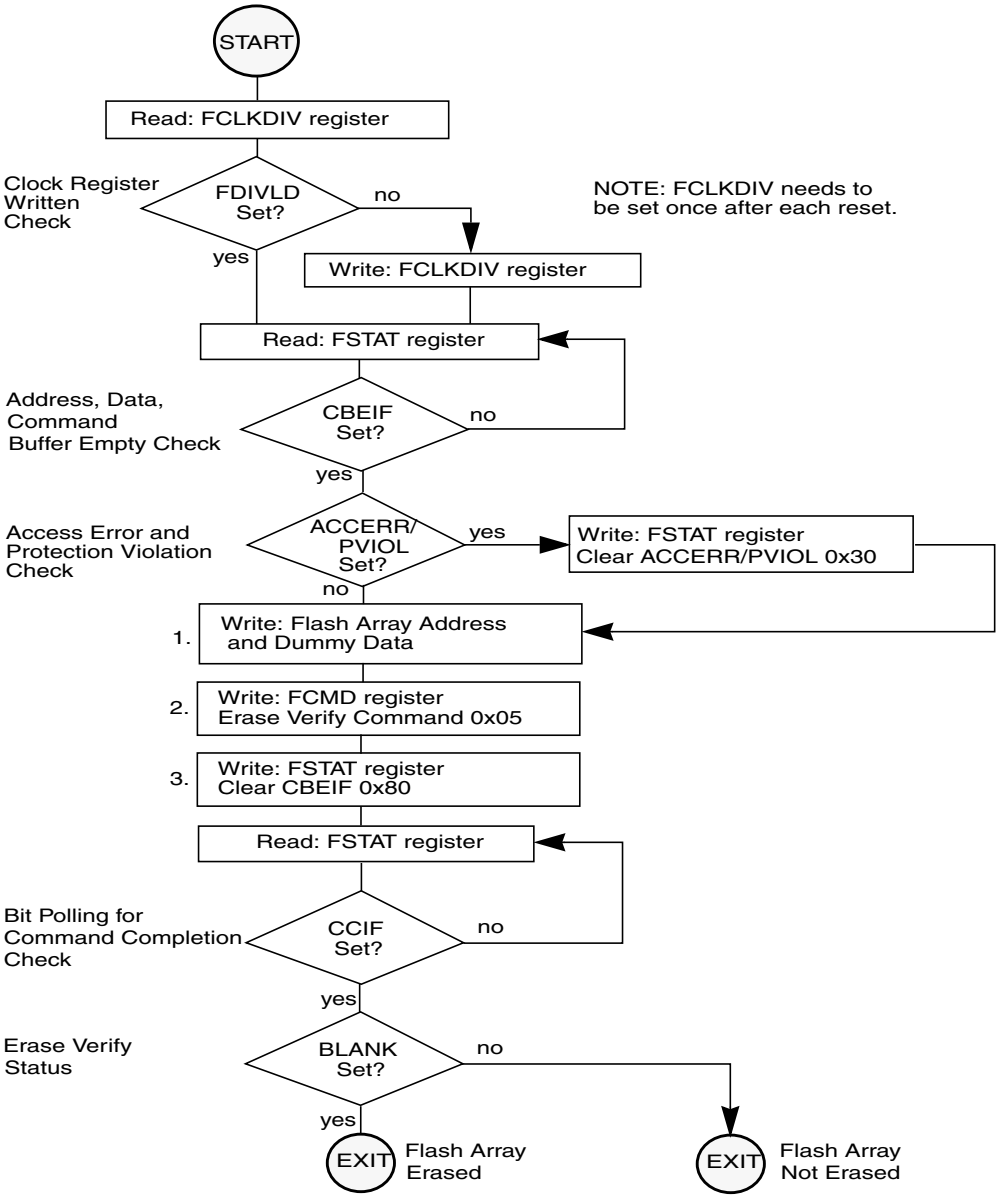


**Figure 20-24. Example Erase Verify Command Flow**

#### 20.4.1.3.2 Program Command

The program operation will program a previously erased word in the Flash array using an embedded algorithm.

An example flow to execute the program operation is shown in Figure 20-25. The program command write sequence is as follows:

1. Write to a Flash array address to start the command write sequence for the program command. The data written will be programmed to the Flash array address written.
2. Write the program command, 0x20, to the FCMD register.
3. Clear the CBEIF flag in the FSTAT register by writing a 1 to CBEIF to launch the program command.

If a word to be programmed is in a protected area of the Flash array, the PVIOL flag in the FSTAT register will set and the program command will not launch. Once the program command has successfully launched, the CCIF flag in the FSTAT register will set after the program operation has completed unless a new command write sequence has been buffered. By executing a new program command write sequence on sequential words after the CBEIF flag in the FSTAT register has been set, up to 55% faster programming time per word can be effectively achieved than by waiting for the CCIF flag to set after each program operation.

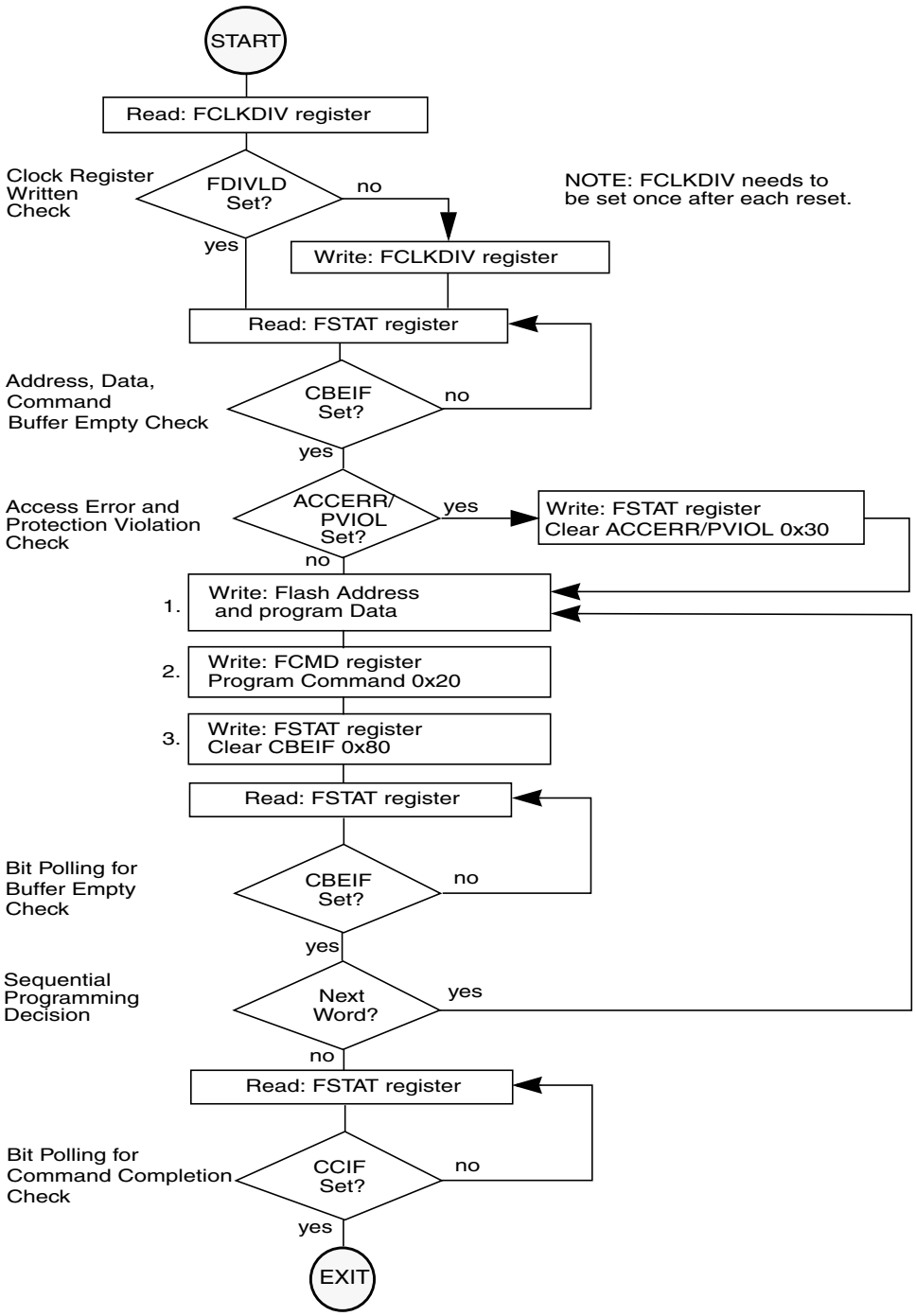


**Figure 20-25. Example Program Command Flow**

#### 20.4.1.3.3 Sector Erase Command

The sector erase operation will erase all addresses in a 1024 byte sector of the Flash array using an embedded algorithm.

An example flow to execute the sector erase operation is shown in Figure 20-26. The sector erase command write sequence is as follows:

1. Write to a Flash array address to start the command write sequence for the sector erase command. The Flash address written determines the sector to be erased while MCU address bits [9:0] and the data written are ignored.
2. Write the sector erase command, 0x40, to the FCMD register.
3. Clear the CBEIF flag in the FSTAT register by writing a 1 to CBEIF to launch the sector erase command.

If a Flash sector to be erased is in a protected area of the Flash array, the PVIOL flag in the FSTAT register will set and the sector erase command will not launch. Once the sector erase command has successfully launched, the CCIF flag in the FSTAT register will set after the sector erase operation has completed unless a new command write sequence has been buffered.

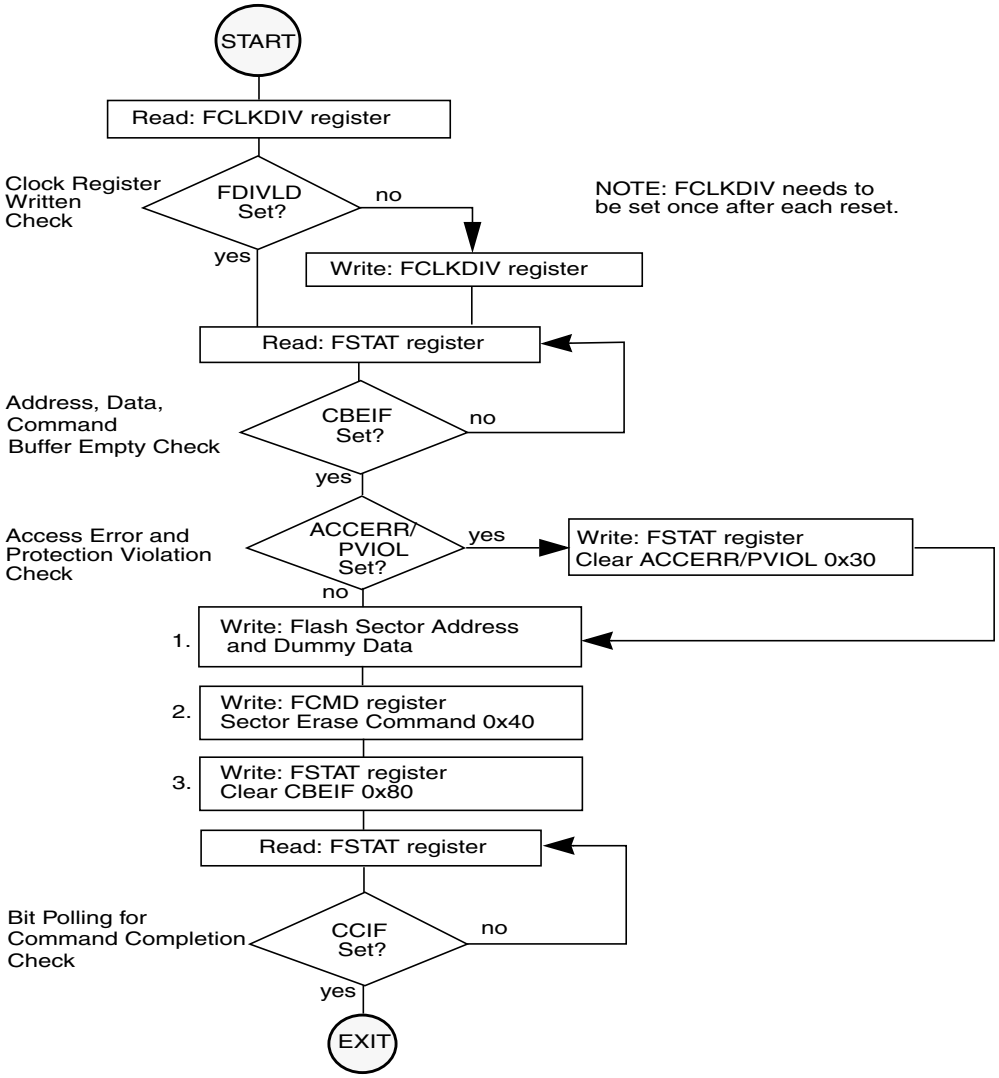


**Figure 20-26. Example Sector Erase Command Flow**

#### 20.4.1.3.4 Mass Erase Command

The mass erase operation will erase all addresses in a Flash array using an embedded algorithm.

An example flow to execute the mass erase operation is shown in Figure 20-27. The mass erase command write sequence is as follows:

1. Write to a Flash array address to start the command write sequence for the mass erase command. The address and data written will be ignored.
2. Write the mass erase command, 0x41, to the FCMD register.
3. Clear the CBEIF flag in the FSTAT register by writing a 1 to CBEIF to launch the mass erase command.

If a Flash array to be erased contains any protected area, the PVIOL flag in the FSTAT register will set and the mass erase command will not launch. Once the mass erase command has successfully launched, the CCIF flag in the FSTAT register will set after the mass erase operation has completed unless a new command write sequence has been buffered.

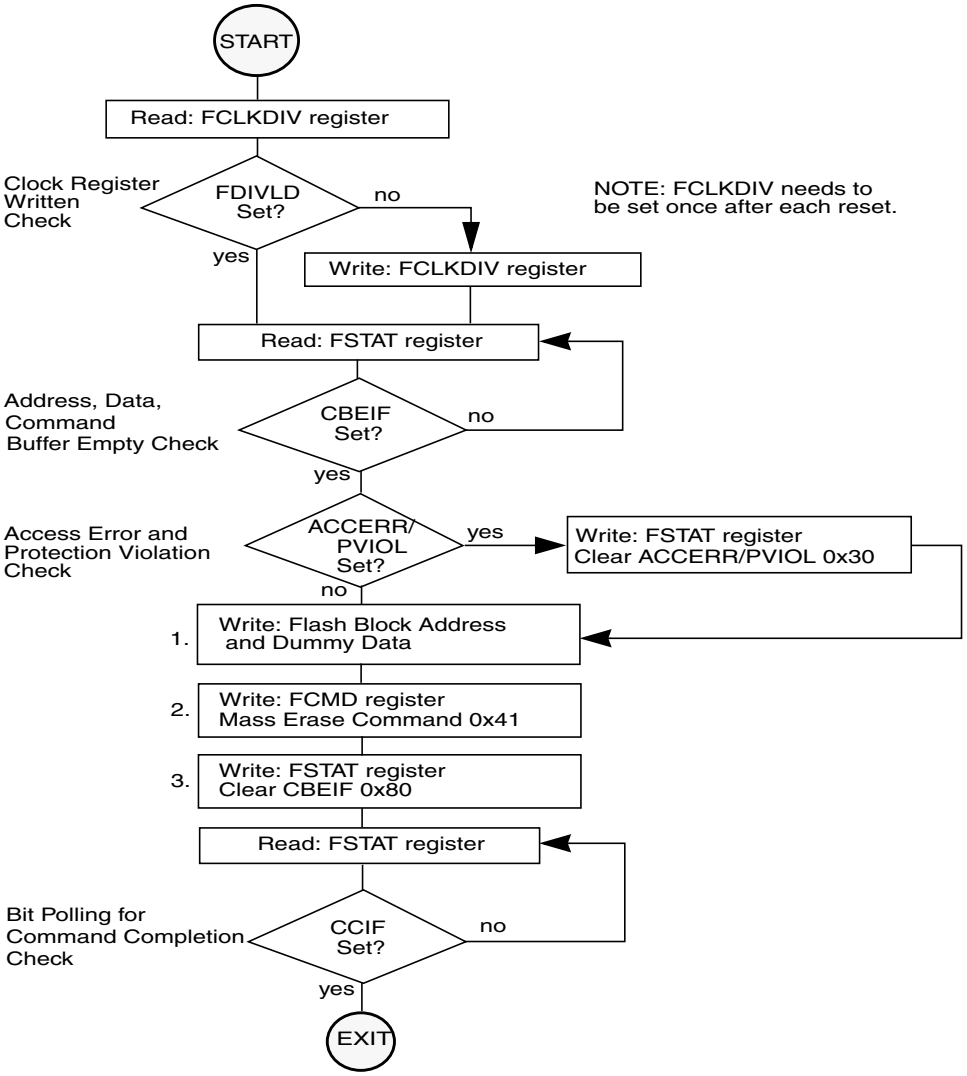


**Figure 20-27. Example Mass Erase Command Flow**

#### 20.4.1.4 Illegal Flash Operations

##### 20.4.1.4.1 Access Error

The ACCERR flag in the FSTAT register will be set during the command write sequence if any of the following illegal Flash operations are performed causing the command write sequence to immediately abort:

1. Writing to the Flash address space before initializing the FCLKDIV register
2. Writing a misaligned word or a byte to the valid Flash address space
3. Writing to the Flash address space while CBEIF is not set
4. Writing a second word to the Flash address space before executing a program or erase command on the previously written word
5. Writing to any Flash register other than FCMD after writing a word to the Flash address space
6. Writing a second command to the FCMD register before executing the previously written command
7. Writing an invalid command to the FCMD register
8. Writing to any Flash register other than FSTAT (to clear CBEIF) after writing to the FCMD register
9. The part enters stop mode and a program or erase command is in progress. The command is aborted and any pending command is killed
10. When security is enabled, a command other than mass erase originating from a non-secure memory or from the background debug mode is written to the FCMD register
11. A 0 is written to the CBEIF bit in the FSTAT register to abort a command write sequence.

The ACCERR flag will not be set if any Flash register is read during the command write sequence. If the Flash array is read during execution of an algorithm (CCIF=0), the Flash module will return invalid data and the ACCERR flag will not be set. If an ACCERR flag is set in the FSTAT register, the Flash command controller is locked. It is not possible to launch another command until the ACCERR flag is cleared.

##### 20.4.1.4.2 Protection Violation

The PVIOL flag in the FSTAT register will be set during the command write sequence after the word write to the Flash address space if any of the following illegal Flash operations are performed, causing the command write sequence to immediately abort:

1. Writing a Flash address to program in a protected area of the Flash array (see Section 20.3.2.5).
2. Writing a Flash address to erase in a protected area of the Flash array.
3. Writing the mass erase command to the FCMD register while any protection is enabled.

If the PVIOL flag is set, the Flash command controller is locked. It is not possible to launch another command until the PVIOL flag is cleared.

## 20.4.2 Operating Modes

### 20.4.2.1 Wait Mode

If the MCU enters wait mode while a Flash command is active (CCIF = 0), that command and any buffered command will be completed.

The Flash module can recover the MCU from wait mode if the interrupts are enabled (see Section 20.4.5).

### 20.4.2.2 Stop Mode

If the MCU enters stop mode while a Flash command is active (CCIF = 0), that command will be aborted and the data being programmed or erased is lost. The high voltage circuitry to the Flash array will be switched off when entering stop mode. CCIF and ACCERR flags will be set. Upon exit from stop mode, the CBEIF flag will be set and any buffered command will not be executed. The ACCERR flag must be cleared before returning to normal operation.

**NOTE**

As active Flash commands are immediately aborted when the MCU enters stop mode, it is strongly recommended that the user does not use the STOP instruction during program and erase execution.

### 20.4.2.3 Background Debug Mode

In background debug mode (BDM), the FPROT register is writable. If the MCU is unsecured, then all Flash commands listed in Table 20-17 can be executed. If the MCU is secured and is in special single chip mode, the only possible command to execute is mass erase.

## 20.4.3 Flash Module Security

The Flash module provides the necessary security information to the MCU. After each reset, the Flash module determines the security state of the MCU as defined in Section 20.3.2.2, “Flash Security Register (FSEC)”.

The contents of the Flash security/options byte at address 0xFF0F in the Flash configuration field must be changed directly by programming address 0xFF0F when the device is unsecured and the higher address sector is unprotected. If the Flash security/options byte is left in the secure state, any reset will cause the MCU to return to the secure operating mode.

### 20.4.3.1 Unsecuring the MCU using Backdoor Key Access

The MCU may only be unsecured by using the backdoor key access feature which requires knowledge of the contents of the backdoor key (four 16-bit words programmed at addresses 0xFF00–0xFF07). If KEYEN[1:0] = 1:0 and the KEYACC bit is set, a write to a backdoor key address in the Flash array triggers a comparison between the written data and the backdoor key data stored in the Flash array. If all four words of data are written to the correct addresses in the correct order and the data matches the backdoor key stored in the Flash array, the MCU will be unsecured. The data must be written to the backdoor key

addresses sequentially staring with 0xFF00-0xFF01 and ending with 0xFF06–0xFF07. The values 0x0000 and 0xFFFF are not permitted as keys. When the KEYACC bit is set, reads of the Flash array will return invalid data.

The user code stored in the Flash array must have a method of receiving the backdoor key from an external stimulus. This external stimulus would typically be through one of the on-chip serial ports.

If KEYEN[1:0] = 1:0 in the FSEC register, the MCU can be unsecured by the backdoor key access sequence described below:

1. Set the KEYACC bit in the FCNFG register
2. Write the correct four 16-bit words to Flash addresses 0xFF00–0xFF07 sequentially starting with 0xFF00
3. Clear the KEYACC bit in the FCNFG register
4. If all four 16-bit words match the backdoor key stored in Flash addresses 0xFF00–0xFF07, the MCU is unsecured and bits SEC[1:0] in the FSEC register are forced to the unsecure state of 1:0

The backdoor key access sequence is monitored by the internal security state machine. An illegal operation during the backdoor key access sequence will cause the security state machine to lock, leaving the MCU in the secured state. A reset of the MCU will cause the security state machine to exit the lock state and allow a new backdoor key access sequence to be attempted. The following illegal operations will lock the security state machine:

1. If any of the four 16-bit words does not match the backdoor key programmed in the Flash array
2. If the four 16-bit words are written in the wrong sequence
3. If more than four 16-bit words are written
4. If any of the four 16-bit words written are 0x0000 or 0xFFFF
5. If the KEYACC bit does not remain set while the four 16-bit words are written

After the backdoor key access sequence has been correctly matched, the MCU will be unsecured. The Flash security byte can be programmed to the unsecure state, if desired.

In the unsecure state, the user has full control of the contents of the four word backdoor key by programming bytes 0xFF00–0xFF07 of the Flash configuration field.

The security as defined in the Flash security/options byte at address 0xFF0F is not changed by using the backdoor key access sequence to unsecure. The backdoor key stored in addresses 0xFF00–0xFF07 is unaffected by the backdoor key access sequence. After the next reset sequence, the security state of the Flash module is determined by the Flash security/options byte at address 0xFF0F. The backdoor key access sequence has no effect on the program and erase protection defined in the FPROT register.

It is not possible to unsecure the MCU in special single chip mode by executing the backdoor key access sequence in background debug mode.

### 20.4.4 Flash Reset Sequence

On each reset, the Flash module executes a reset sequence to hold CPU activity while loading the following registers from the Flash array memory according to Table 20-1:

- FPROT — Flash Protection Register (see Section 20.3.2.5)
- FSEC — Flash Security Register (see Section 20.3.2.2)

#### 20.4.4.1 Reset While Flash Command Active

If a reset occurs while any Flash command is in progress, that command will be immediately aborted. The state of the word being programmed or the sector/array being erased is not guaranteed.

### 20.4.5 Interrupts

The Flash module can generate an interrupt when all Flash commands have completed execution or the Flash address, data, and command buffers are empty.

**Table 20-18. Flash Interrupt Sources**

| Interrupt Source | Interrupt Flag | Local Enable | Global (CCR) Mask |
|---|---|---|---|
| Flash Address, Data, and Command Buffers are empty | CBEIF (FSTAT register) | CBEIE | I Bit |
| All Flash commands have completed execution | CCIF (FSTAT register) | CCIE | I Bit |

**NOTE**

Vector addresses and their relative interrupt priority are determined at the MCU level.

#### 20.4.5.1 Description of Interrupt Operation

Figure 20-28 shows the logic used for generating interrupts.

The Flash module uses the CBEIF and CCIF flags in combination with the enable bits CBIE and CCIE to discriminate for the generation of interrupts.

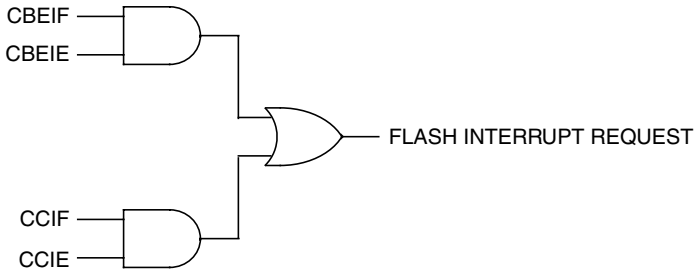


**Figure 20-28. Flash Interrupt Implementation**

For a detailed description of these register bits, refer to Section 20.3.2.4, “Flash Configuration Register (FCNFG)” and Section 20.3.2.6, “Flash Status Register (FSTAT)”.

# Chapter 21
# 128 Kbyte Flash Module (S12FTS128K1V1)

## 21.1 Introduction

The FTS128K1 module implements a 128 Kbyte Flash (nonvolatile) memory. The Flash memory contains one array of 128 Kbytes organized as 1024 rows of 128 bytes with an erase sector size of eight rows (1024 bytes). The Flash array may be read as either bytes, aligned words, or misaligned words. Read access time is one bus cycle for byte and aligned word, and two bus cycles for misaligned words.

The Flash array is ideal for program and data storage for single-supply applications allowing for field reprogramming without requiring external voltage sources for program or erase. Program and erase functions are controlled by a command driven interface. The Flash module supports both mass erase and sector erase. An erased bit reads 1 and a programmed bit reads 0. The high voltage required to program and erase is generated internally. It is not possible to read from a Flash array while it is being erased or programmed.

**CAUTION**

A Flash word must be in the erased state before being programmed.
Cumulative programming of bits within a Flash word is not allowed.

### 21.1.1 Glossary

**Command Write Sequence** — A three-step MCU instruction sequence to program, erase, or erase verify the Flash array memory.

### 21.1.2 Features

- 128 Kbytes of Flash memory comprised of one 128 Kbyte array divided into 128 sectors of 1024 bytes
- Automated program and erase algorithm
- Interrupts on Flash command completion and command buffer empty
- Fast sector erase and word program operation
- 2-stage command pipeline for faster multi-word program times
- Flexible protection scheme to prevent accidental program or erase
- Single power supply for Flash program and erase operations
- Security feature to prevent unauthorized access to the Flash array memory

### 21.1.3 Modes of Operation

See Section 21.4.2, “Operating Modes” for a description of the Flash module operating modes. For program and erase operations, refer to Section 21.4.1, “Flash Command Operations”.

### 21.1.4 Block Diagram

Figure 21-1 shows a block diagram of the FTS128K1 module.

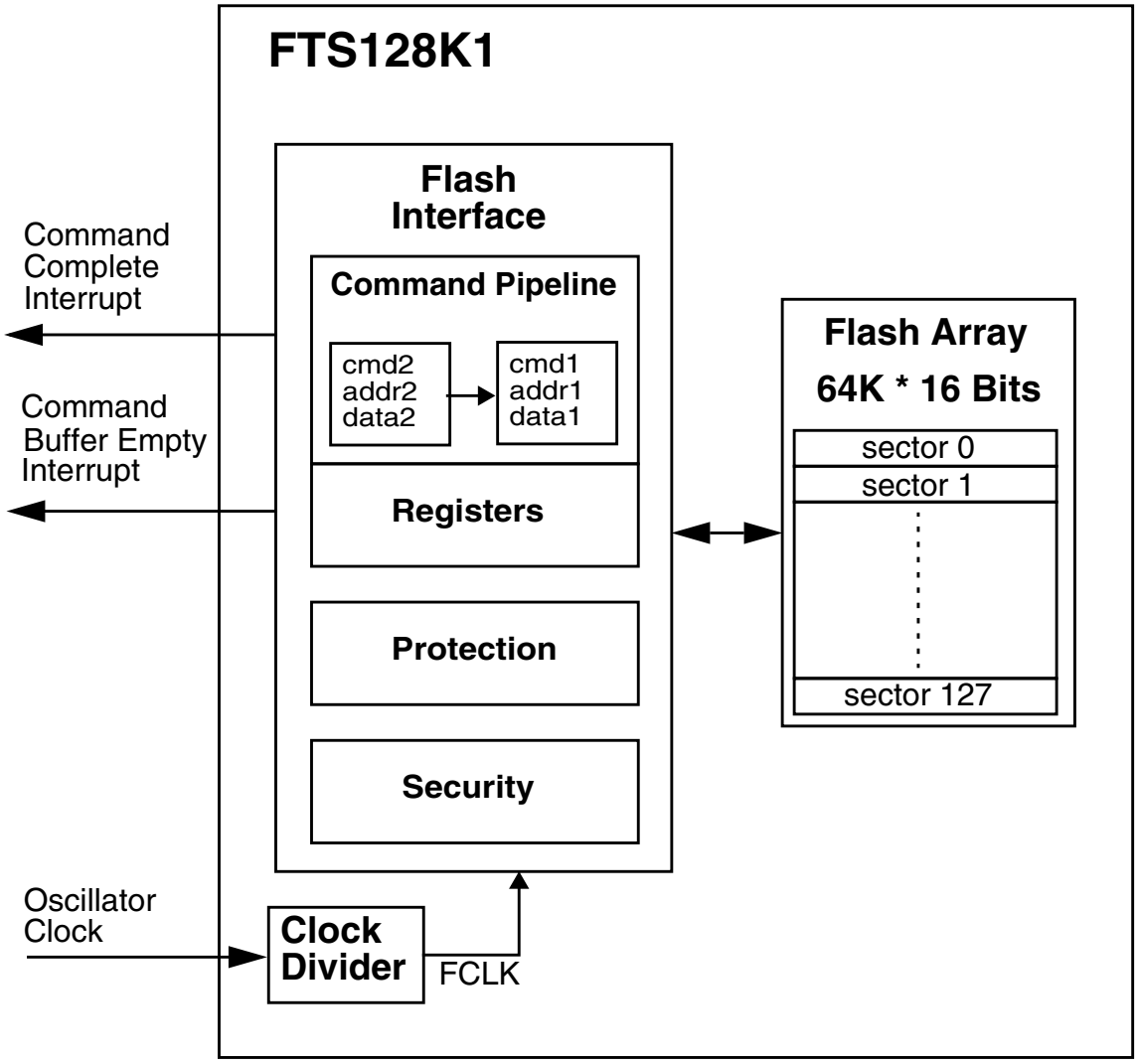


Figure 21-1. FTS128K1 Block Diagram

## 21.2 External Signal Description

The FTS128K1 module contains no signals that connect off-chip.

## 21.3 Memory Map and Registers

This section describes the FTS128K1 memory map and registers.

### 21.3.1 Module Memory Map

The FTS128K1 memory map is shown in Figure 21-2. The HCS12 architecture places the Flash array addresses between 0x4000 and 0xFFFF, which corresponds to three 16 Kbyte pages. The content of the HCS12 Core PPAGE register is used to map the logical middle page ranging from address 0x8000 to 0xBFFF to any physical 16K byte page in the Flash array memory.[1] The FPROT register (see Section 21.3.2.5) can be set to globally protect the entire Flash array. Three separate areas, one starting from the Flash array starting address (called lower) towards higher addresses, one growing downward from the Flash array end address (called higher), and the remaining addresses, can be activated for protection. The Flash array addresses covered by these protectable regions are shown in Figure 21-2. The higher address area is mainly targeted to hold the boot loader code since it covers the vector space. The lower address area can be used for EEPROM emulation in an MCU without an EEPROM module since it can be left unprotected while the remaining addresses are protected from program or erase. Default protection settings as well as security information that allows the MCU to restrict access to the Flash module are stored in the Flash configuration field described in Table 21-1.

**Table 21-1. Flash Configuration Field**

| Flash Address | Size (bytes) | Description |
|---|---|---|
| 0xFF00–0xFF07 | 8 | Backdoor Key to unlock security |
| 0xFF08–0xFF0C | 5 | Reserved |
| 0xFF0D | 1 | Flash Protection byte<br>Refer to Section 21.3.2.5, “Flash Protection Register (FPROT)” |
| 0xFF0E | 1 | Reserved |
| 0xFF0F | 1 | Flash Security/Options byte<br>Refer to Section 21.3.2.2, “Flash Security Register (FSEC)” |

1. By placing 0x3E/0x3F in the HCS12 Core PPAGE register, the bottom/top fixed 16 Kbyte pages can be seen twice in the MCU memory map.

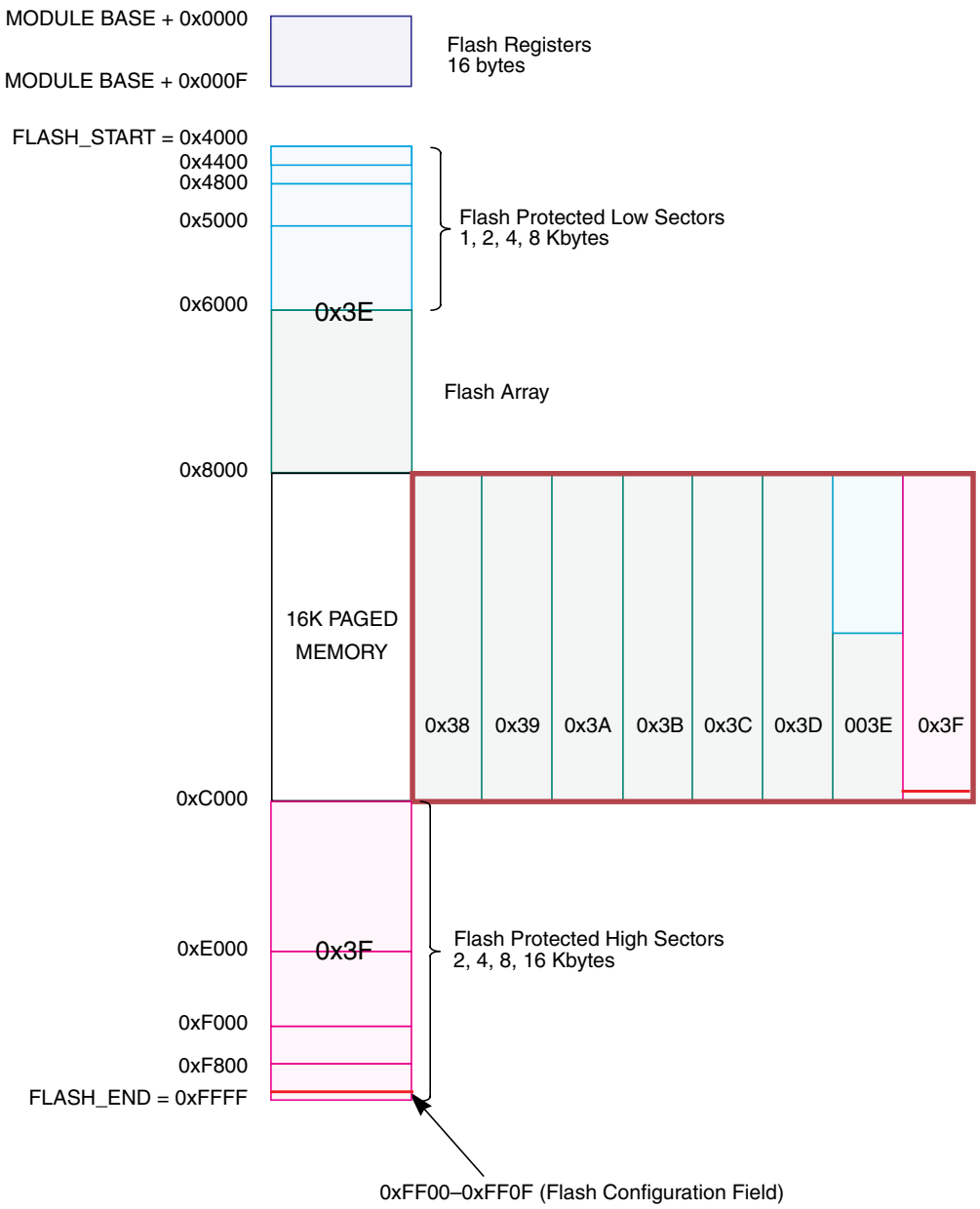


Note: 0x38–0x3F correspond to the PPAGE register content

**Figure 21-2. Flash Memory Map**

**Table 21-2. Flash Array Memory Map Summary**

| MCU Address Range | PPAGE | Protectable Low Range | Protectable High Range | Array Relative Address[1] |
|---|---|---|---|---|
| 0x0000–0x3FFF[2] | Unpaged (0x3D) | N.A. | N.A. | 0x14000–0x17FFF |
| 0x4000–0x7FFF | Unpaged (0x3E) | 0x4000–0x43FF<br>0x4000–0x47FF<br>0x4000–0x4FFF<br>0x4000–0x5FFF | N.A. | 0x18000–0x1BFFF |
| 0x8000–0xBFFF | 0x38 | N.A. | N.A. | 0x00000–0x03FFF |
| | 0x39 | N.A. | N.A. | 0x04000–0x07FFF |
| | 0x3A | N.A. | N.A. | 0x08000–0x0BFFF |
| | 0x3B | N.A. | N.A. | 0x0C000–0x0FFFF |
| | 0x3C | N.A. | N.A. | 0x10000–0x13FFF |
| | 0x3D | N.A. | N.A. | 0x14000–0x17FFF |
| | 0x3E | 0x8000–0x83FF<br>0x8000–0x87FF<br>0x8000–0x8FFF<br>0x8000–0x9FFF | N.A. | 0x18000–0x1BFFF |
| | 0x3F | N.A. | 0xB800–0xBFFF<br>0xB000–0xBFFF<br>0xA000–0xBFFF<br>0x8000–0xBFFF | 0x1C000–0x1FFFF |
| 0xC000–0xFFFF | Unpaged (0x3F) | N.A. | 0xF800–0xFFFF<br>0xF000–0xFFFF<br>0xE000–0xFFFF<br>0xC000–0xFFFF | 0x1C000–0x1FFFF |

1. Inside Flash block.
2. If allowed by MCU.

## 21.3.2 Register Descriptions

The Flash module contains a set of 16 control and status registers located between module base + 0x0000 and 0x000F. A summary of the Flash module registers is given in Figure 21-3. Detailed descriptions of each register bit are provided.

| Register Name | | Bit 7 | 6 | 5 | 4 | 3 | 2 | 1 | Bit 0 |
|---|---|---|---|---|---|---|---|---|---|
| 0x0000 FCLKDIV | R | FDIVLD | PRDIV8 | FDIV5 | FDIV4 | FDIV3 | FDIV2 | FDIV1 | FDIV0 |
| | W | | | | | | | | |
| 0x0001 FSEC | R | KEYEN1 | KEYEN0 | NV5 | NV4 | NV3 | NV2 | SEC1 | SEC0 |
| | W | | | | | | | | |
| 0x0002 RESERVED1 (1) | R | 0 | 0 | 0 | 0 | 0 | 0 | 0 | 0 |
| | W | | | | | | | | |
| 0x0003 FCNFG | R | CBEIE | CCIE | KEYACC | 0 | 0 | 0 | 0 | 0 |
| | W | | | | | | | | |
| 0x0004 FPROT | R | FPOPEN | NV6 | FPHDIS | FPHS1 | FPHS0 | FPLDIS | FPLS1 | FPLS0 |
| | W | | | | | | | | |
| 0x0005 FSTAT | R | CBEIF | CCIF | PVIOL | ACCERR | 0 | BLANK | FAIL | DONE |
| | W | | | | | | | | |
| 0x0006 FCMD | R | 0 | CMDB6 | CMDB5 | 0 | 0 | CMDB2 | 0 | CMDB0 |
| | W | | | | | | | | |
| 0x0007 RESERVED2[1] | R | 0 | 0 | 0 | 0 | 0 | 0 | 0 | 0 |
| | W | | | | | | | | |
| 0x0008 FADDRHI[1] | R | FABHI | | | | | | | |
| | W | | | | | | | | |
| 0x0009 FADDRLO[1] | R | FABLO | | | | | | | |
| | W | | | | | | | | |
| 0x000A FDATAHI[1] | R | FDHI | | | | | | | |
| | W | | | | | | | | |
| 0x000B FDATALO[1] | R | FDLO | | | | | | | |
| | W | | | | | | | | |
| 0x000C RESERVED3[1] | R | 0 | 0 | 0 | 0 | 0 | 0 | 0 | 0 |
| | W | | | | | | | | |
| 0x000D RESERVED4[1] | R | 0 | 0 | 0 | 0 | 0 | 0 | 0 | 0 |
| | W | | | | | | | | |
| 0x000E RESERVED5[1] | R | 0 | 0 | 0 | 0 | 0 | 0 | 0 | 0 |
| | W | | | | | | | | |
| 0x000F RESERVED6[1] | R | 0 | 0 | 0 | 0 | 0 | 0 | 0 | 0 |
| | W | | | | | | | | |

= Unimplemented or Reserved

**Figure 21-3. Flash Register Summary**

1. Intended for factory test purposes only.

### 21.3.2.1 Flash Clock Divider Register (FCLKDIV)

The FCLKDIV register is used to control timed events in program and erase algorithms.

Module Base + 0x0000

| | 7 | 6 | 5 | 4 | 3 | 2 | 1 | 0 |
|---|---|---|---|---|---|---|---|---|
| R | FDIVLD | PRDIV8 | FDIV5 | FDIV4 | FDIV3 | FDIV2 | FDIV1 | FDIV0 |
| W | | | | | | | | |
| Reset | 0 | 0 | 0 | 0 | 0 | 0 | 0 | 0 |

= Unimplemented or Reserved

**Figure 21-4. Flash Clock Divider Register (FCLKDIV)**

All bits in the FCLKDIV register are readable, bits 6–0 are write once and bit 7 is not writable.

**Table 21-3. FCLKDIV Field Descriptions**

| Field | Description |
|---|---|
| 7<br>FDIVLD | **Clock Divider Loaded**<br>0 FCLKDIV register has not been written<br>1 FCLKDIV register has been written to since the last reset |
| 6<br>PRDIV8 | **Enable Prescalar by 8**<br>0 The oscillator clock is directly fed into the Flash clock divider<br>1 The oscillator clock is divided by 8 before feeding into the Flash clock divider |
| 5–0<br>FDIV[5:0] | **Clock Divider Bits** — The combination of PRDIV8 and FDIV[5:0] must divide the oscillator clock down to a frequency of 150 kHz – 200 kHz. The maximum divide ratio is 512. Refer to Section 21.4.1.1, “Writing the FCLKDIV Register” for more information. |

### 21.3.2.2 Flash Security Register (FSEC)

The FSEC register holds all bits associated with the security of the MCU and Flash module.

Module Base + 0x0001

| | 7 | 6 | 5 | 4 | 3 | 2 | 1 | 0 |
|---|---|---|---|---|---|---|---|---|
| R | KEYEN1 | KEYEN0 | NV5 | NV4 | NV3 | NV2 | SEC1 | SEC0 |
| W | | | | | | | | |
| Reset | F | F | F | F | F | F | F | F |

= Unimplemented or Reserved

**Figure 21-5. Flash Security Register (FSEC)**

All bits in the FSEC register are readable but not writable.

The FSEC register is loaded from the Flash configuration field at 0xFF0F during the reset sequence, indicated by F in Figure 21-5.

**Table 21-4. FSEC Field Descriptions**

| Field | Description |
|---|---|
| 7–6<br>KEYEN[1:0] | **Backdoor Key Security Enable Bits** — The KEYEN[1:0] bits define the enabling of the backdoor key access to the Flash module as shown in Table 21-5. |
| 5–2<br>NV[5:2] | **Nonvolatile Flag Bits** — The NV[5:2] bits are available to the user as nonvolatile flags. |
| 1–0<br>SEC[1:0] | **Flash Security Bits** — The SEC[1:0] bits define the security state of the MCU as shown in Table 21-6. If the Flash module is unsecured using backdoor key access, the SEC[1:0] bits are forced to 1:0. |

**Table 21-5. Flash KEYEN States**

| KEYEN[1:0] | Status of Backdoor Key Access |
|---|---|
| 00 | DISABLED |
| 01[1] | DISABLED |
| 10 | ENABLED |
| 11 | DISABLED |

1. Preferred KEYEN state to disable Backdoor Key Access.

**Table 21-6. Flash Security States**

| SEC[1:0] | Status of Security |
|---|---|
| 00 | Secured |
| 01[1] | Secured |
| 10 | Unsecured |
| 11 | Secured |

1. Preferred SEC state to set MCU to secured state.

The security function in the Flash module is described in Section 21.4.3, “Flash Module Security”.

### 21.3.2.3 RESERVED1

This register is reserved for factory testing and is not accessible to the user.

Module Base + 0x0002

| | 7 | 6 | 5 | 4 | 3 | 2 | 1 | 0 |
|---|---|---|---|---|---|---|---|---|
| R | 0 | 0 | 0 | 0 | 0 | 0 | 0 | 0 |
| W | | | | | | | | |
| Reset | 0 | 0 | 0 | 0 | 0 | 0 | 0 | 0 |

= Unimplemented or Reserved

**Figure 21-6. RESERVED1**

All bits read 0 and are not writable.

### 21.3.2.4 Flash Configuration Register (FCNFG)

The FCNFG register enables the Flash interrupts and gates the security backdoor key writes.

Module Base + 0x0003

| | 7 | 6 | 5 | 4 | 3 | 2 | 1 | 0 |
|---|---|---|---|---|---|---|---|---|
| R | CBEIE | CCIE | KEYACC | 0 | 0 | 0 | 0 | 0 |
| W | | | | | | | | |
| Reset | 0 | 0 | 0 | 0 | 0 | 0 | 0 | 0 |

= Unimplemented or Reserved

**Figure 21-7. Flash Configuration Register (FCNFG)**

CBEIE, CCIE, and KEYACC are readable and writable while remaining bits read 0 and are not writable. KEYACC is only writable if the KEYEN bit in the FSEC register is set to the enabled state (see Section 21.3.2.2).

**Table 21-7. FCNFG Field Descriptions**

| Field | Description |
|---|---|
| 7<br>CBEIE | **Command Buffer Empty Interrupt Enable** — The CBEIE bit enables the interrupts in case of an empty command buffer in the Flash module.<br>0 Command Buffer Empty interrupts disabled<br>1 An interrupt will be requested whenever the CBEIF flag is set (see Section 21.3.2.6) |
| 6<br>CCIE | **Command Complete Interrupt Enable** — The CCIE bit enables the interrupts in case of all commands being completed in the Flash module.<br>0 Command Complete interrupts disabled<br>1 An interrupt will be requested whenever the CCIF flag is set (see Section 21.3.2.6) |
| 5<br>KEYACC | **Enable Security Key Writing**.<br>0 Flash writes are interpreted as the start of a command write sequence<br>1 Writes to the Flash array are interpreted as a backdoor key while reads of the Flash array return invalid data |

### 21.3.2.5 Flash Protection Register (FPROT)

The FPROT register defines which Flash sectors are protected against program or erase.

Module Base + 0x0004

| | 7 | 6 | 5 | 4 | 3 | 2 | 1 | 0 |
|---|---|---|---|---|---|---|---|---|
| R | FPOPEN | NV6 | FPHDIS | FPHS1 | FPHS0 | FPLDIS | FPLS1 | FPLS0 |
| W | | | | | | | | |
| Reset | F | F | F | F | F | F | F | F |

**Figure 21-8. Flash Protection Register (FPROT)**

The FPROT register is readable in normal and special modes. FPOPEN can only be written from a 1 to a 0. FPLS[1:0] can be written anytime until FPLDIS is cleared. FPHS[1:0] can be written anytime until

FPHDIS is cleared. The FPROT register is loaded from Flash address 0xFF0D during the reset sequence, indicated by F in Figure 21-8.

To change the Flash protection that will be loaded on reset, the upper sector of the Flash array must be unprotected, then the Flash protection byte located at Flash address 0xFF0D must be written to.

A protected Flash sector is disabled by FPHDIS and FPLDIS while the size of the protected sector is defined by FPHS[1:0] and FPLS[1:0] in the FPROT register.

Trying to alter any of the protected areas will result in a protect violation error and the PVIOL flag will be set in the FSTAT register (see Section 21.3.2.6). A mass erase of the whole Flash array is only possible when protection is fully disabled by setting the FPOPEN, FPLDIS, and FPHDIS bits. An attempt to mass erase a Flash array while protection is enabled will set the PVIOL flag in the FSTAT register.

**Table 21-8. FPROT Field Descriptions**

| Field | Description |
|---|---|
| 7<br>FPOPEN | **Protection Function for Program or Erase** — It is possible using the FPOPEN bit to either select address ranges to be protected using FPHDIS, FPLDIS, FPHS[1:0] and FPLS[1:0] or to select the same ranges to be unprotected. When FPOPEN is set, FPxDIS enables the ranges to be protected, whereby clearing FPxDIS enables protection for the range specified by the corresponding FPxS[1:0] bits. When FPOPEN is cleared, FPxDIS defines unprotected ranges as specified by the corresponding FPxS[1:0] bits. In this case, setting FPxDIS enables protection. Thus the effective polarity of the FPxDIS bits is swapped by the FPOPEN bit as shown in Table 21-9. This function allows the main part of the Flash array to be protected while a small range can remain unprotected for EEPROM emulation.<br>0 The FPHDIS and FPLDIS bits define Flash address ranges to be unprotected<br>1 The FPHDIS and FPLDIS bits define Flash address ranges to be protected |
| 6<br>NV6 | **Nonvolatile Flag Bit** — The NV6 bit should remain in the erased state for future enhancements. |
| 5<br>FPHDIS | **Flash Protection Higher Address Range Disable** — The FPHDIS bit determines whether there is a protected/unprotected area in the higher space of the Flash address map.<br>0 Protection/unprotection enabled<br>1 Protection/unprotection disabled |
| 4–3<br>FPHS[1:0] | **Flash Protection Higher Address Size** — The FPHS[1:0] bits determine the size of the protected/unprotected sector as shown in Table 21-10. The FPHS[1:0] bits can only be written to while the FPHDIS bit is set. |
| 2<br>FPLDIS | **Flash Protection Lower Address Range Disable** — The FPLDIS bit determines whether there is a protected/unprotected sector in the lower space of the Flash address map.<br>0 Protection/unprotection enabled<br>1 Protection/unprotection disabled |
| 1–0<br>FPLS[1:0] | **Flash Protection Lower Address Size** — The FPLS[1:0] bits determine the size of the protected/unprotected sector as shown in Table 21-11. The FPLS[1:0] bits can only be written to while the FPLDIS bit is set. |

**Table 21-9. Flash Protection Function**

| FPOPEN | FPHDIS | FPHS[1] | FPHS[0] | FPLDIS | FPLS[1] | FPLS[0] | Function[1] |
|---|---|---|---|---|---|---|---|
| 1 | 1 | x | x | 1 | x | x | No protection |
| 1 | 1 | x | x | 0 | x | x | Protect low range |
| 1 | 0 | x | x | 1 | x | x | Protect high range |
| 1 | 0 | x | x | 0 | x | x | Protect high and low ranges |
| 0 | 1 | x | x | 1 | x | x | Full Flash array protected |
| 0 | 0 | x | x | 1 | x | x | Unprotected high range |
| 0 | 1 | x | x | 0 | x | x | Unprotected low range |
| 0 | 0 | x | x | 0 | x | x | Unprotected high and low ranges |

1. For range sizes refer to Table 21-10 and Table 21-11 or .

**Table 21-10. Flash Protection Higher Address Range**

| FPHS[1:0] | Address Range | Range Size |
|---|---|---|
| 00 | 0xF800–0xFFFF | 2 Kbytes |
| 01 | 0xF000–0xFFFF | 4 Kbytes |
| 10 | 0xE000–0xFFFF | 8 Kbytes |
| 11 | 0xC000–0xFFFF | 16 Kbytes |

**Table 21-11. Flash Protection Lower Address Range**

| FPLS[1:0] | Address Range | Range Size |
|---|---|---|
| 00 | 0x4000–0x43FF | 1 Kbyte |
| 01 | 0x4000–0x47FF | 2 Kbytes |
| 10 | 0x4000–0x4FFF | 4 Kbytes |
| 11 | 0x4000–0x5FFF | 8 Kbytes |

Figure 21-9 illustrates all possible protection scenarios. Although the protection scheme is loaded from the Flash array after reset, it is allowed to change in normal modes. This protection scheme can be used by applications requiring re-programming in single chip mode while providing as much protection as possible if no re-programming is required.

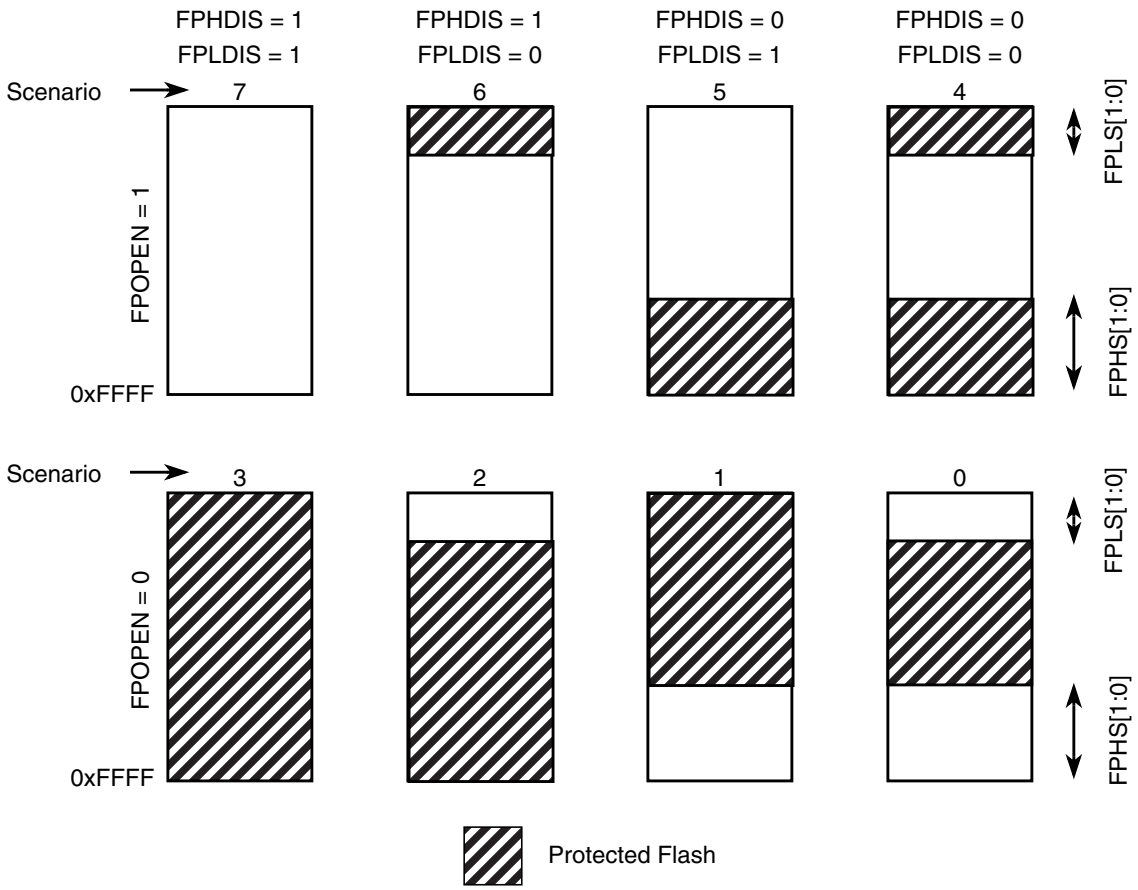


**Figure 21-9. Flash Protection Scenarios**

### 21.3.2.5.1 Flash Protection Restrictions

The general guideline is that protection can only be added, not removed. All valid transitions between Flash protection scenarios are specified in Table 21-12. Any attempt to write an invalid scenario to the FPROT register will be ignored and the FPROT register will remain unchanged. The contents of the FPROT register reflect the active protection scenario.

**Table 21-12. Flash Protection Scenario Transitions**

| From Protection Scenario | To Protection Scenario[1] | | | | | | | |
|---|---|---|---|---|---|---|---|---|
| | 0 | 1 | 2 | 3 | 4 | 5 | 6 | 7 |
| 0 | X | X | X | X | | | | |
| 1 | | X | | X | | | | |
| 2 | | | X | X | | | | |
| 3 | | | | X | | | | |
| 4 | | | | X | X | | | |
| 5 | | | X | X | X | X | | |

**Table 21-12. Flash Protection Scenario Transitions**

| From Protection Scenario | To Protection Scenario[1] | | | | | | | |
|---|---|---|---|---|---|---|---|---|
| | 0 | 1 | 2 | 3 | 4 | 5 | 6 | 7 |
| 6 | | X | | X | X | | X | |
| 7 | X | X | X | X | X | X | X | X |

1. Allowed transitions marked with X.

### 21.3.2.6 Flash Status Register (FSTAT)

The FSTAT register defines the status of the Flash command controller and the results of command execution.

Module Base + 0x0005

| | 7 | 6 | 5 | 4 | 3 | 2 | 1 | 0 |
|---|---|---|---|---|---|---|---|---|
| R | CBEIF | CCIF | PVIOL | ACCERR | 0 | BLANK | FAIL | DONE |
| W | | | | | | | | |
| Reset | 1 | 1 | 0 | 0 | 0 | 0 | 0 | 1 |

= Unimplemented or Reserved

**Figure 21-10. Flash Status Register (FSTAT)**

In normal modes, bits CBEIF, PVIOL, and ACCERR are readable and writable, bits CCIF and BLANK are readable and not writable, remaining bits, including FAIL and DONE, read 0 and are not writable. In special modes, FAIL is readable and writable while DONE is readable but not writable. FAIL must be clear in special modes when starting a command write sequence.

**Table 21-13. FSTAT Field Descriptions**

| Field | Description |
|---|---|
| 7<br>CBEIF | **Command Buffer Empty Interrupt Flag** — The CBEIF flag indicates that the address, data and command buffers are empty so that a new command write sequence can be started. The CBEIF flag is cleared by writing a 1 to CBEIF. Writing a 0 to the CBEIF flag has no effect on CBEIF. Writing a 0 to CBEIF after writing an aligned word to the Flash address space but before CBEIF is cleared will abort a command write sequence and cause the ACCERR flag in the FSTAT register to be set. Writing a 0 to CBEIF outside of a command write sequence will not set the ACCERR flag. The CBEIF flag is used together with the CBEIE bit in the FCNFG register to generate an interrupt request (see Figure 21-26).<br>0 Buffers are full<br>1 Buffers are ready to accept a new command |
| 6<br>CCIF | **Command Complete Interrupt Flag** — The CCIF flag indicates that there are no more commands pending. The CCIF flag is cleared when CBEIF is clear and sets automatically upon completion of all active and pending commands. The CCIF flag does not set when an active commands completes and a pending command is fetched from the command buffer. Writing to the CCIF flag has no effect. The CCIF flag is used together with the CCIE bit in the FCNFG register to generate an interrupt request (see Figure 21-26).<br>0 Command in progress<br>1 All commands are completed |

**Table 21-13. FSTAT Field Descriptions**

| Field | Description |
|---|---|
| 5<br>PVIOL | **Protection Violation** — The PVIOL flag indicates an attempt was made to program or erase an address in a protected Flash array memory area. The PVIOL flag is cleared by writing a 1 to PVIOL. Writing a 0 to the PVIOL flag has no effect on PVIOL. While PVIOL is set, it is not possible to launch another command.<br>0 No protection violation detected<br>1 Protection violation has occurred |
| 4<br>ACCERR | **Access Error** — The ACCERR flag indicates an illegal access to the Flash array caused by either a violation of the command write sequence, issuing an illegal command (illegal combination of the CMDBx bits in the FCMD register) or the execution of a CPU STOP instruction while a command is executing (CCIF=0). The ACCERR flag is cleared by writing a 1 to ACCERR. Writing a 0 to the ACCERR flag has no effect on ACCERR. While ACCERR is set, it is not possible to launch another command.<br>0 No access error detected<br>1 Access error has occurred |
| 2<br>BLANK | **Flash Array Has Been Verified as Erased** — The BLANK flag indicates that an erase verify command has checked the Flash array and found it to be erased. The BLANK flag is cleared by hardware when CBEIF is cleared as part of a new valid command write sequence. Writing to the BLANK flag has no effect on BLANK.<br>0 If an erase verify command has been requested, and the CCIF flag is set, then a 0 in BLANK indicates the array is not erased<br>1 Flash array verifies as erased |
| 1<br>FAIL | **Flag Indicating a Failed Flash Operation** — In special modes, the FAIL flag will set if the erase verify operation fails (Flash array verified as not erased). Writing a 0 to the FAIL flag has no effect on FAIL. The FAIL flag is cleared by writing a 1 to FAIL. While FAIL is set, it is not possible to launch another command.<br>0 Flash operation completed without error<br>1 Flash operation failed |
| 0<br>DONE | **Flag Indicating a Failed Operation is not Active** — In special modes, the DONE flag will clear if a program, erase, or erase verify operation is active.<br>0 Flash operation is active<br>1 Flash operation is not active |

### 21.3.2.7 Flash Command Register (FCMD)

The FCMD register defines the Flash commands.

Module Base + 0x0006

| | 7 | 6 | 5 | 4 | 3 | 2 | 1 | 0 |
|---|---|---|---|---|---|---|---|---|
| R | 0 | CMDB6 | CMDB5 | 0 | 0 | CMDB2 | 0 | CMDB0 |
| W | | | | | | | | |
| Reset | 0 | 0 | 0 | 0 | 0 | 0 | 0 | 0 |

= Unimplemented or Reserved

**Figure 21-11. Flash Command Register (FCMD)**

Bits CMDB6, CMDB5, CMDB2, and CMDB0 are readable and writable during a command write sequence while bits 7, 4, 3, and 1 read 0 and are not writable.

**Table 21-14. FCMD Field Descriptions**

| Field | Description |
|---|---|
| 6, 5, 2, 0<br>CMDB[6:5]<br>CMDB[2]<br>CMDB[0] | Valid Flash commands are shown in Table 21-15. An attempt to execute any command other than those listed in Table 21-15 will set the ACCERR bit in the FSTAT register (see Section 21.3.2.6). |

**Table 21-15. Valid Flash Command List**

| CMDB | NVM Command |
|---|---|
| 0x05 | Erase verify |
| 0x20 | Word program |
| 0x40 | Sector erase |
| 0x41 | Mass erase |

### 21.3.2.8 RESERVED2

This register is reserved for factory testing and is not accessible to the user.

Module Base + 0x0007

| | 7 | 6 | 5 | 4 | 3 | 2 | 1 | 0 |
|---|---|---|---|---|---|---|---|---|
| R | 0 | 0 | 0 | 0 | 0 | 0 | 0 | 0 |
| W | | | | | | | | |
| Reset | 0 | 0 | 0 | 0 | 0 | 0 | 0 | 0 |

= Unimplemented or Reserved

**Figure 21-12. RESERVED2**

All bits read 0 and are not writable.

### 21.3.2.9 Flash Address Register (FADDR)

FADDRHI and FADDRLO are the Flash address registers.

Module Base + 0x0008

| | 7 | 6 | 5 | 4 | 3 | 2 | 1 | 0 |
|---|---|---|---|---|---|---|---|---|
| R<br>W | FABHI | | | | | | | |
| Reset | 0 | 0 | 0 | 0 | 0 | 0 | 0 | 0 |

**Figure 21-13. Flash Address High Register (FADDRHI)**

Module Base + 0x0009

| | 7 | 6 | 5 | 4 | 3 | 2 | 1 | 0 |
|---|---|---|---|---|---|---|---|---|
| R<br>W | FABLO | | | | | | | |
| Reset | 0 | 0 | 0 | 0 | 0 | 0 | 0 | 0 |

**Figure 21-14. Flash Address Low Register (FADDRLO)**

In normal modes, all FABHI and FABLO bits read 0 and are not writable. In special modes, the FABHI and FABLO bits are readable and writable. For sector erase, the MCU address bits [9:0] are ignored. For mass erase, any address within the Flash array is valid to start the command.

### 21.3.2.10 Flash Data Register (FDATA)

FDATAHI and FDATALO are the Flash data registers.

Module Base + 0x000A

| | 7 | 6 | 5 | 4 | 3 | 2 | 1 | 0 |
|---|---|---|---|---|---|---|---|---|
| R<br>W | FDHI | | | | | | | |
| Reset | 0 | 0 | 0 | 0 | 0 | 0 | 0 | 0 |

**Figure 21-15. Flash Data High Register (FDATAHI)**

Module Base + 0x000B

| | 7 | 6 | 5 | 4 | 3 | 2 | 1 | 0 |
|---|---|---|---|---|---|---|---|---|
| R<br>W | FDLO | | | | | | | |
| Reset | 0 | 0 | 0 | 0 | 0 | 0 | 0 | 0 |

**Figure 21-16. Flash Data Low Register (FDATALO)**

In normal modes, all FDATAHI and FDATALO bits read 0 and are not writable. In special modes, all FDATAHI and FDATALO bits are readable and writable when writing to an address within the Flash address range.

### 21.3.2.11 RESERVED3

This register is reserved for factory testing and is not accessible to the user.

Module Base + 0x000C

| | 7 | 6 | 5 | 4 | 3 | 2 | 1 | 0 |
|---|---|---|---|---|---|---|---|---|
| R | 0 | 0 | 0 | 0 | 0 | 0 | 0 | 0 |
| W | | | | | | | | |
| Reset | 0 | 0 | 0 | 0 | 0 | 0 | 0 | 0 |

= Unimplemented or Reserved

**Figure 21-17. RESERVED3**

All bits read 0 and are not writable.

### 21.3.2.12 RESERVED4

This register is reserved for factory testing and is not accessible to the user.

Module Base + 0x000D

| | 7 | 6 | 5 | 4 | 3 | 2 | 1 | 0 |
|---|---|---|---|---|---|---|---|---|
| R | 0 | 0 | 0 | 0 | 0 | 0 | 0 | 0 |
| W | | | | | | | | |
| Reset | 0 | 0 | 0 | 0 | 0 | 0 | 0 | 0 |

= Unimplemented or Reserved

**Figure 21-18. RESERVED4**

All bits read 0 and are not writable.

### 21.3.2.13 RESERVED5

This register is reserved for factory testing and is not accessible to the user.

Module Base + 0x000E

| | 7 | 6 | 5 | 4 | 3 | 2 | 1 | 0 |
|---|---|---|---|---|---|---|---|---|
| R | 0 | 0 | 0 | 0 | 0 | 0 | 0 | 0 |
| W | | | | | | | | |
| Reset | 0 | 0 | 0 | 0 | 0 | 0 | 0 | 0 |

= Unimplemented or Reserved

**Figure 21-19. RESERVED5**

All bits read 0 and are not writable.

### 21.3.2.14 RESERVED6

This register is reserved for factory testing and is not accessible to the user.

Module Base + 0x000F

| | 7 | 6 | 5 | 4 | 3 | 2 | 1 | 0 |
|---|---|---|---|---|---|---|---|---|
| R | 0 | 0 | 0 | 0 | 0 | 0 | 0 | 0 |
| W | | | | | | | | |
| Reset | 0 | 0 | 0 | 0 | 0 | 0 | 0 | 0 |

= Unimplemented or Reserved

**Figure 21-20. RESERVED6**

All bits read 0 and are not writable.

## 21.4 Functional Description

### 21.4.1 Flash Command Operations

Write operations are used for the program, erase, and erase verify algorithms described in this section. The program and erase algorithms are controlled by a state machine whose timebase FCLK is derived from the oscillator clock via a programmable divider. The FCMD register as well as the associated FADDR and FDATA registers operate as a buffer and a register (2-stage FIFO) so that a new command along with the necessary data and address can be stored to the buffer while the previous command is still in progress. This pipelined operation allows a time optimization when programming more than one word on a specific row, as the high voltage generation can be kept active in between two programming commands. The pipelined operation also allows a simplification of command launching. Buffer empty as well as command completion are signalled by flags in the FSTAT register with corresponding interrupts generated, if enabled.

The next sections describe:

- How to write the FCLKDIV register
- Command write sequence used to program, erase or erase verify the Flash array
- Valid Flash commands
- Errors resulting from illegal Flash operations

#### 21.4.1.1 Writing the FCLKDIV Register

Prior to issuing any Flash command after a reset, it is first necessary to write the FCLKDIV register to divide the oscillator clock down to within the 150-kHz to 200-kHz range. Since the program and erase timings are also a function of the bus clock, the FCLKDIV determination must take this information into account.

If we define:

- FCLK as the clock of the Flash timing control block
- Tbus as the period of the bus clock
- INT(x) as taking the integer part of x (e.g., INT(4.323) = 4),

then FCLKDIV register bits PRDIV8 and FDIV[5:0] are to be set as described in Figure 21-21.

For example, if the oscillator clock frequency is 950 kHz and the bus clock is 10 MHz, FCLKDIV bits FDIV[5:0] should be set to 4 (000100) and bit PRDIV8 set to 0. The resulting FCLK is then 190 kHz. As a result, the Flash algorithm timings are increased over optimum target by:

$$(200 - 190) / 200 \times 100 = 5\%$$

Command execution time will increase proportionally with the period of FCLK.

**CAUTION**

Because of the impact of clock synchronization on the accuracy of the functional timings, programming or erasing the Flash array cannot be performed if the bus clock runs at less than 1 MHz. Programming or erasing the Flash array with an input clock < 150 kHz should be avoided. Setting FCLKDIV to a value such that FCLK < 150 kHz can destroy the Flash array due to overstress. Setting FCLKDIV to a value such that (1/FCLK + Tbus) < 5µs can result in incomplete programming or erasure of the Flash array cells.

If the FCLKDIV register is written, the bit FDIVLD is set automatically. If the FDIVLD bit is 0, the FCLKDIV register has not been written since the last reset. If the FCLKDIV register has not been written to, the Flash command loaded during a command write sequence will not execute and the ACCERR flag in the FSTAT register will set.

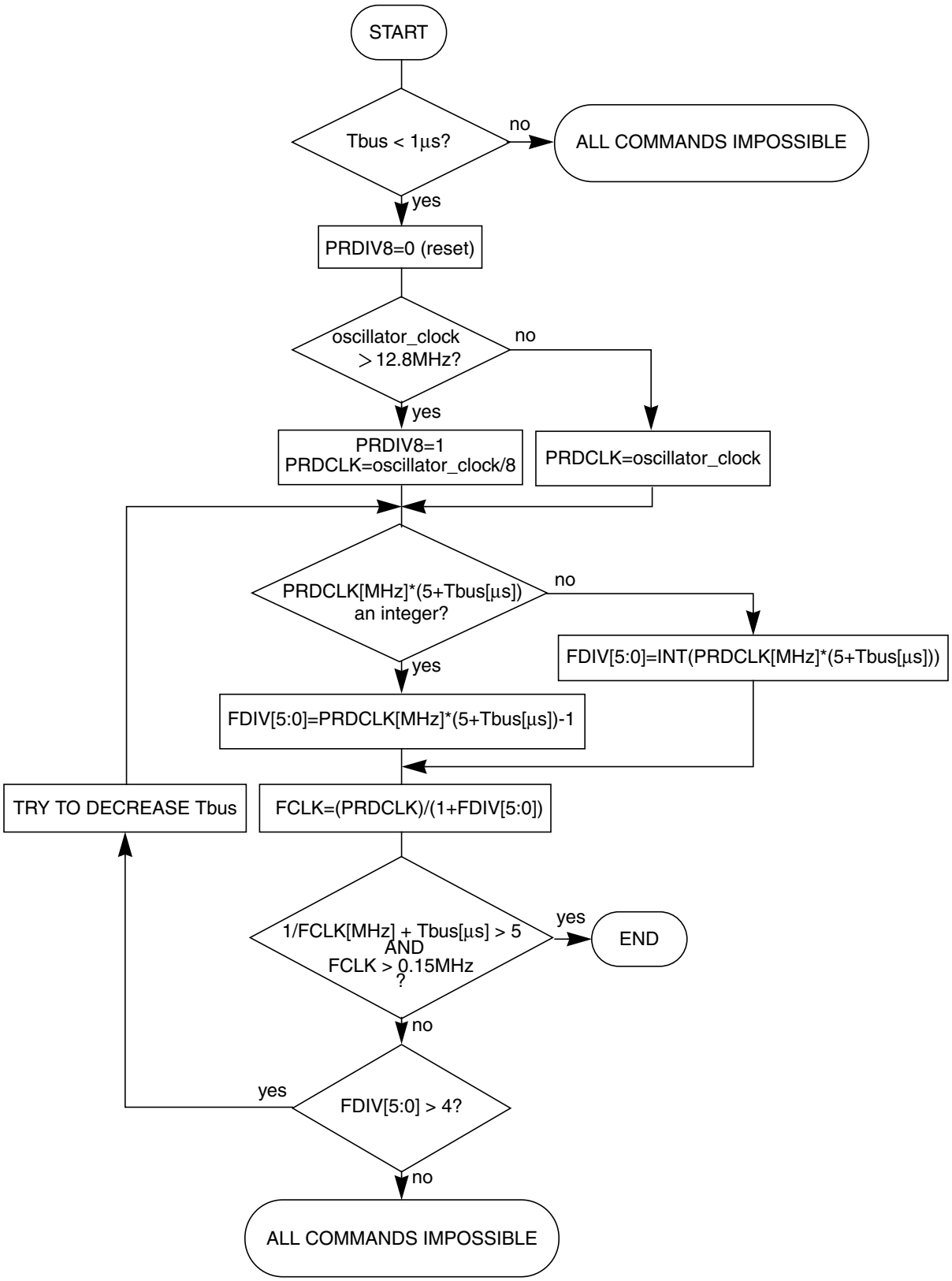


**Figure 21-21. PRDIV8 and FDIV Bits Determination Procedure**

#### 21.4.1.2 Command Write Sequence

The Flash command controller is used to supervise the command write sequence to execute program, erase, and erase verify algorithms.

Before starting a command write sequence, the ACCERR and PVIOL flags in the FSTAT register must be clear and the CBEIF flag should be tested to determine the state of the address, data, and command buffers. If the CBEIF flag is set, indicating the buffers are empty, a new command write sequence can be started. If the CBEIF flag is clear, indicating the buffers are not available, a new command write sequence will overwrite the contents of the address, data, and command buffers.

A command write sequence consists of three steps which must be strictly adhered to with writes to the Flash module not permitted between the steps. However, Flash register and array reads are allowed during a command write sequence. The basic command write sequence is as follows:

1. Write to a valid address in the Flash array memory.
2. Write a valid command to the FCMD register.
3. Clear the CBEIF flag in the FSTAT register by writing a 1 to CBEIF to launch the command.

The address written in step 1 will be stored in the FADDR registers and the data will be stored in the FDATA registers. When the CBEIF flag is cleared in step 3, the CCIF flag is cleared by the Flash command controller indicating that the command was successfully launched. For all command write sequences, the CBEIF flag will set after the CCIF flag is cleared indicating that the address, data, and command buffers are ready for a new command write sequence to begin. A buffered command will wait for the active operation to be completed before being launched. Once a command is launched, the completion of the command operation is indicated by the setting of the CCIF flag in the FSTAT register. The CCIF flag will set upon completion of all active and buffered commands.

#### 21.4.1.3 Valid Flash Commands

Table 21-16 summarizes the valid Flash commands along with the effects of the commands on the Flash array.

**Table 21-16. Valid Flash Commands**

| FCMD | Meaning | Function on Flash Array |
|---|---|---|
| 0x05 | Erase Verify | Verify all bytes in the Flash array are erased.<br>If the Flash array is erased, the BLANK bit will set in the FSTAT register upon command completion. |
| 0x20 | Program | Program a word (2 bytes) in the Flash array. |
| 0x40 | Sector Erase | Erase all 1024 bytes in a sector of the Flash array. |
| 0x41 | Mass Erase | Erase all bytes in the Flash array.<br>A mass erase of the full Flash array is only possible when FPLDIS, FPHDIS, and FPOPEN bits in the FPROT register are set prior to launching the command. |

**CAUTION**

A Flash word must be in the erased state before being programmed. Cumulative programming of bits within a Flash word is not allowed.

#### 21.4.1.3.1 Erase Verify Command

The erase verify operation will verify that a Flash array is erased.

An example flow to execute the erase verify operation is shown in Figure 21-22. The erase verify command write sequence is as follows:

1. Write to a Flash array address to start the command write sequence for the erase verify command. The address and data written will be ignored.
2. Write the erase verify command, 0x05, to the FCMD register.
3. Clear the CBEIF flag in the FSTAT register by writing a 1 to CBEIF to launch the erase verify command.

After launching the erase verify command, the CCIF flag in the FSTAT register will set after the operation has completed unless a new command write sequence has been buffered. Upon completion of the erase verify operation, the BLANK flag in the FSTAT register will be set if all addresses in the Flash array are verified to be erased. If any address in the Flash array is not erased, the erase verify operation will terminate and the BLANK flag in the FSTAT register will remain clear.

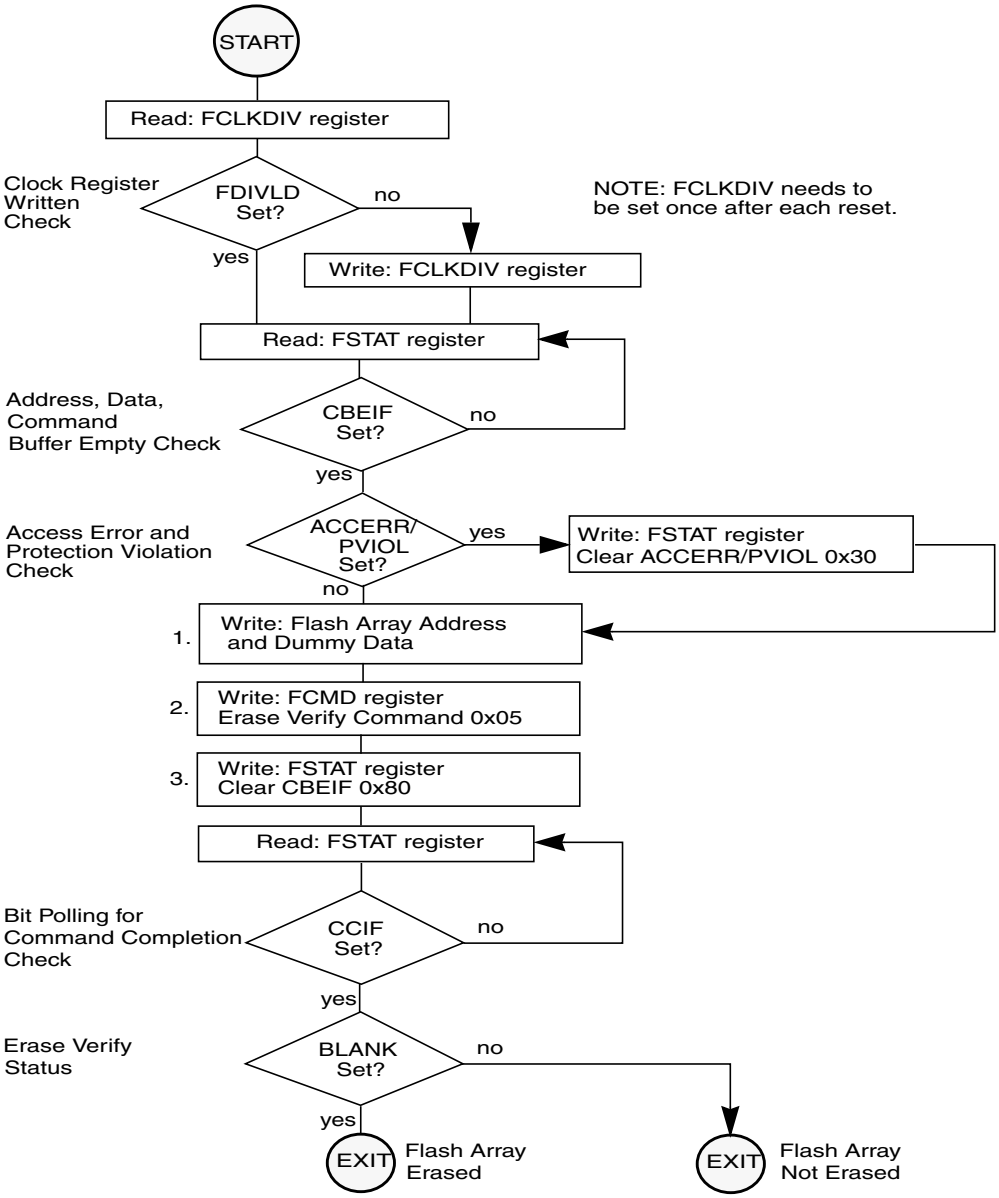


**Figure 21-22. Example Erase Verify Command Flow**

#### 21.4.1.3.2 Program Command

The program operation will program a previously erased word in the Flash array using an embedded algorithm.

An example flow to execute the program operation is shown in Figure 21-23. The program command write sequence is as follows:

1. Write to a Flash array address to start the command write sequence for the program command. The data written will be programmed to the Flash array address written.
2. Write the program command, 0x20, to the FCMD register.
3. Clear the CBEIF flag in the FSTAT register by writing a 1 to CBEIF to launch the program command.

If a word to be programmed is in a protected area of the Flash array, the PVIOL flag in the FSTAT register will set and the program command will not launch. Once the program command has successfully launched, the CCIF flag in the FSTAT register will set after the program operation has completed unless a new command write sequence has been buffered. By executing a new program command write sequence on sequential words after the CBEIF flag in the FSTAT register has been set, up to 55% faster programming time per word can be effectively achieved than by waiting for the CCIF flag to set after each program operation.

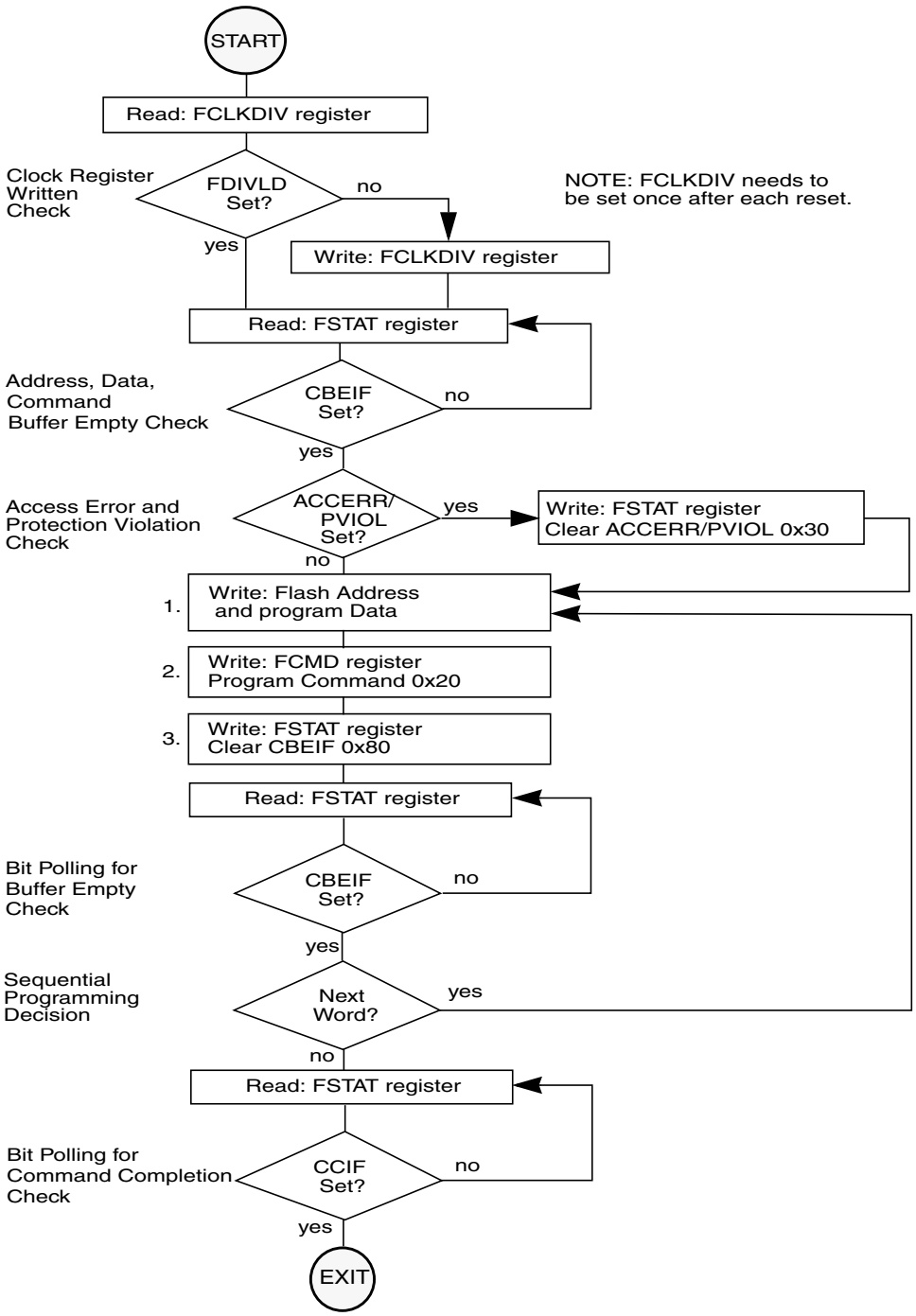


**Figure 21-23. Example Program Command Flow**

#### 21.4.1.3.3 Sector Erase Command

The sector erase operation will erase all addresses in a 1024 byte sector of the Flash array using an embedded algorithm.

An example flow to execute the sector erase operation is shown in Figure 21-24. The sector erase command write sequence is as follows:

1. Write to a Flash array address to start the command write sequence for the sector erase command. The Flash address written determines the sector to be erased while MCU address bits [9:0] and the data written are ignored.
2. Write the sector erase command, 0x40, to the FCMD register.
3. Clear the CBEIF flag in the FSTAT register by writing a 1 to CBEIF to launch the sector erase command.

If a Flash sector to be erased is in a protected area of the Flash array, the PVIOL flag in the FSTAT register will set and the sector erase command will not launch. Once the sector erase command has successfully launched, the CCIF flag in the FSTAT register will set after the sector erase operation has completed unless a new command write sequence has been buffered.

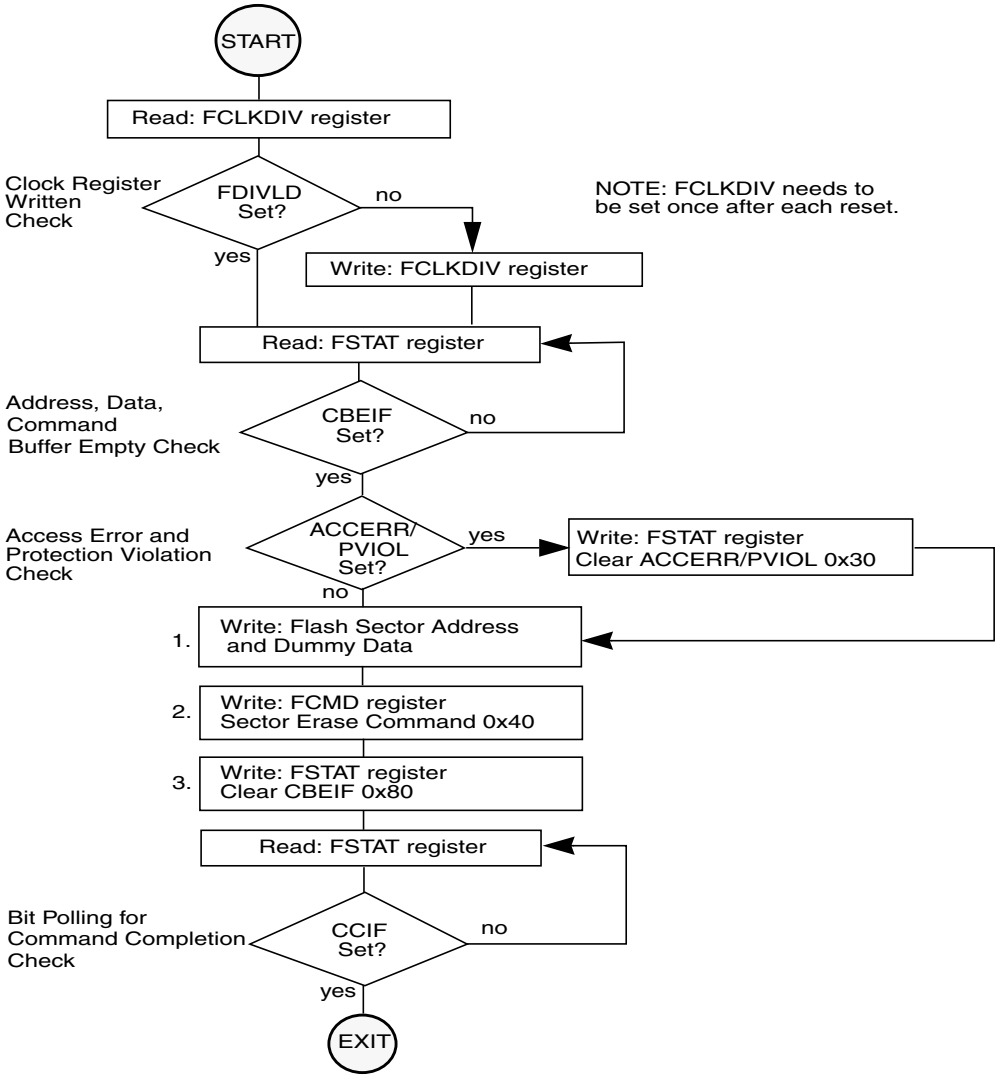


**Figure 21-24. Example Sector Erase Command Flow**

#### 21.4.1.3.4 Mass Erase Command

The mass erase operation will erase all addresses in a Flash array using an embedded algorithm.

An example flow to execute the mass erase operation is shown in Figure 21-25. The mass erase command write sequence is as follows:

1. Write to a Flash array address to start the command write sequence for the mass erase command. The address and data written will be ignored.
2. Write the mass erase command, 0x41, to the FCMD register.
3. Clear the CBEIF flag in the FSTAT register by writing a 1 to CBEIF to launch the mass erase command.

If a Flash array to be erased contains any protected area, the PVIOL flag in the FSTAT register will set and the mass erase command will not launch. Once the mass erase command has successfully launched, the CCIF flag in the FSTAT register will set after the mass erase operation has completed unless a new command write sequence has been buffered.

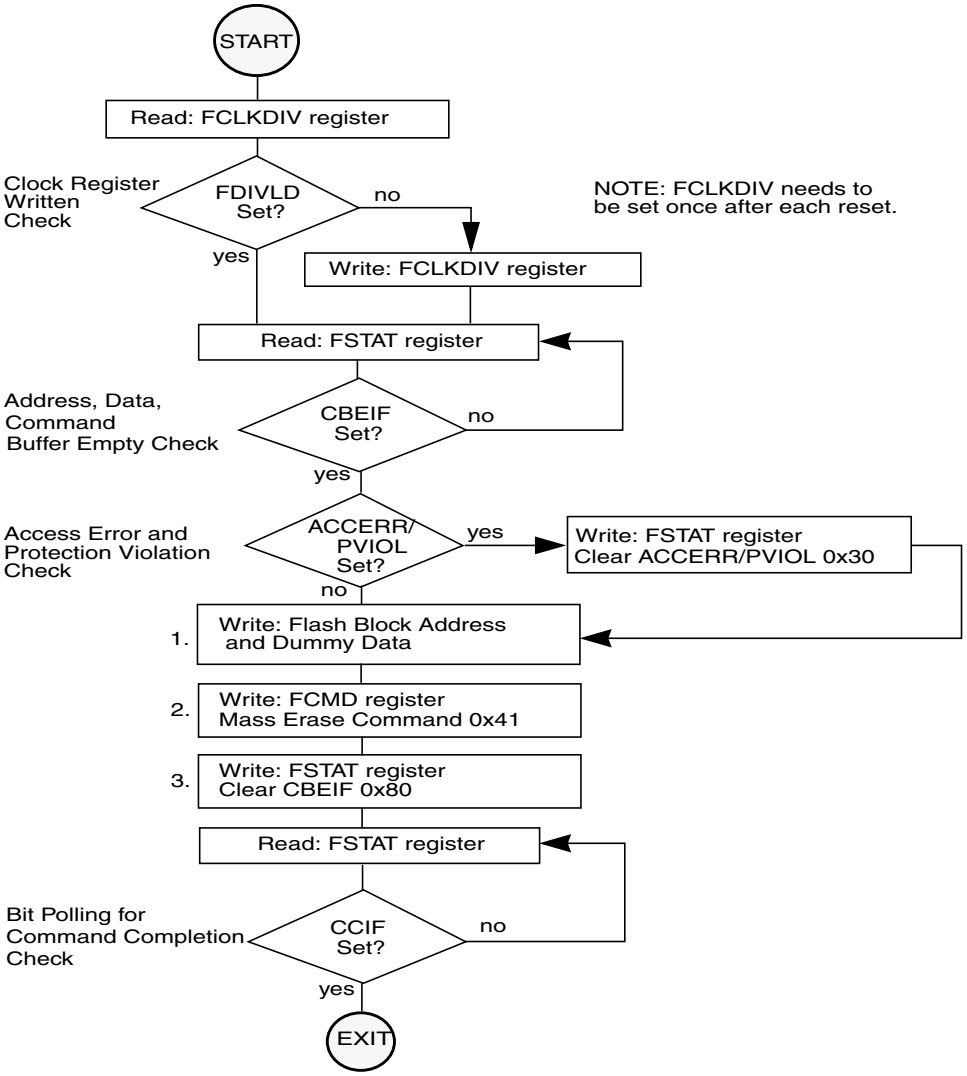


**Figure 21-25. Example Mass Erase Command Flow**

#### 21.4.1.4 Illegal Flash Operations

##### 21.4.1.4.1 Access Error

The ACCERR flag in the FSTAT register will be set during the command write sequence if any of the following illegal Flash operations are performed causing the command write sequence to immediately abort:

1. Writing to the Flash address space before initializing the FCLKDIV register
2. Writing a misaligned word or a byte to the valid Flash address space
3. Writing to the Flash address space while CBEIF is not set
4. Writing a second word to the Flash address space before executing a program or erase command on the previously written word
5. Writing to any Flash register other than FCMD after writing a word to the Flash address space
6. Writing a second command to the FCMD register before executing the previously written command
7. Writing an invalid command to the FCMD register
8. Writing to any Flash register other than FSTAT (to clear CBEIF) after writing to the FCMD register
9. The part enters stop mode and a program or erase command is in progress. The command is aborted and any pending command is killed
10. When security is enabled, a command other than mass erase originating from a non-secure memory or from the background debug mode is written to the FCMD register
11. A 0 is written to the CBEIF bit in the FSTAT register to abort a command write sequence.

The ACCERR flag will not be set if any Flash register is read during the command write sequence. If the Flash array is read during execution of an algorithm (CCIF=0), the Flash module will return invalid data and the ACCERR flag will not be set. If an ACCERR flag is set in the FSTAT register, the Flash command controller is locked. It is not possible to launch another command until the ACCERR flag is cleared.

##### 21.4.1.4.2 Protection Violation

The PVIOL flag in the FSTAT register will be set during the command write sequence after the word write to the Flash address space if any of the following illegal Flash operations are performed, causing the command write sequence to immediately abort:

1. Writing a Flash address to program in a protected area of the Flash array (see Section 21.3.2.5).
2. Writing a Flash address to erase in a protected area of the Flash array.
3. Writing the mass erase command to the FCMD register while any protection is enabled.

If the PVIOL flag is set, the Flash command controller is locked. It is not possible to launch another command until the PVIOL flag is cleared.

## 21.4.2 Operating Modes

### 21.4.2.1 Wait Mode

If the MCU enters wait mode while a Flash command is active (CCIF = 0), that command and any buffered command will be completed.

The Flash module can recover the MCU from wait mode if the interrupts are enabled (see Section 21.4.5).

### 21.4.2.2 Stop Mode

If the MCU enters stop mode while a Flash command is active (CCIF = 0), that command will be aborted and the data being programmed or erased is lost. The high voltage circuitry to the Flash array will be switched off when entering stop mode. CCIF and ACCERR flags will be set. Upon exit from stop mode, the CBEIF flag will be set and any buffered command will not be executed. The ACCERR flag must be cleared before returning to normal operation.

**NOTE**

As active Flash commands are immediately aborted when the MCU enters stop mode, it is strongly recommended that the user does not use the STOP instruction during program and erase execution.

### 21.4.2.3 Background Debug Mode

In background debug mode (BDM), the FPROT register is writable. If the MCU is unsecured, then all Flash commands listed in Table 21-16 can be executed. If the MCU is secured and is in special single chip mode, the only possible command to execute is mass erase.

## 21.4.3 Flash Module Security

The Flash module provides the necessary security information to the MCU. After each reset, the Flash module determines the security state of the MCU as defined in Section 21.3.2.2, “Flash Security Register (FSEC)”.

The contents of the Flash security/options byte at address 0xFF0F in the Flash configuration field must be changed directly by programming address 0xFF0F when the device is unsecured and the higher address sector is unprotected. If the Flash security/options byte is left in the secure state, any reset will cause the MCU to return to the secure operating mode.

### 21.4.3.1 Unsecuring the MCU using Backdoor Key Access

The MCU may only be unsecured by using the backdoor key access feature which requires knowledge of the contents of the backdoor key (four 16-bit words programmed at addresses 0xFF00–0xFF07). If KEYEN[1:0] = 1:0 and the KEYACC bit is set, a write to a backdoor key address in the Flash array triggers a comparison between the written data and the backdoor key data stored in the Flash array. If all four words of data are written to the correct addresses in the correct order and the data matches the backdoor key stored in the Flash array, the MCU will be unsecured. The data must be written to the backdoor key

addresses sequentially staring with 0xFF00-0xFF01 and ending with 0xFF06–0xFF07. The values 0x0000 and 0xFFFF are not permitted as keys. When the KEYACC bit is set, reads of the Flash array will return invalid data.

The user code stored in the Flash array must have a method of receiving the backdoor key from an external stimulus. This external stimulus would typically be through one of the on-chip serial ports.

If KEYEN[1:0] = 1:0 in the FSEC register, the MCU can be unsecured by the backdoor key access sequence described below:

1. Set the KEYACC bit in the FCNFG register
2. Write the correct four 16-bit words to Flash addresses 0xFF00–0xFF07 sequentially starting with 0xFF00
3. Clear the KEYACC bit in the FCNFG register
4. If all four 16-bit words match the backdoor key stored in Flash addresses 0xFF00–0xFF07, the MCU is unsecured and bits SEC[1:0] in the FSEC register are forced to the unsecure state of 1:0

The backdoor key access sequence is monitored by the internal security state machine. An illegal operation during the backdoor key access sequence will cause the security state machine to lock, leaving the MCU in the secured state. A reset of the MCU will cause the security state machine to exit the lock state and allow a new backdoor key access sequence to be attempted. The following illegal operations will lock the security state machine:

1. If any of the four 16-bit words does not match the backdoor key programmed in the Flash array
2. If the four 16-bit words are written in the wrong sequence
3. If more than four 16-bit words are written
4. If any of the four 16-bit words written are 0x0000 or 0xFFFF
5. If the KEYACC bit does not remain set while the four 16-bit words are written

After the backdoor key access sequence has been correctly matched, the MCU will be unsecured. The Flash security byte can be programmed to the unsecure state, if desired.

In the unsecure state, the user has full control of the contents of the four word backdoor key by programming bytes 0xFF00–0xFF07 of the Flash configuration field.

The security as defined in the Flash security/options byte at address 0xFF0F is not changed by using the backdoor key access sequence to unsecure. The backdoor key stored in addresses 0xFF00–0xFF07 is unaffected by the backdoor key access sequence. After the next reset sequence, the security state of the Flash module is determined by the Flash security/options byte at address 0xFF0F. The backdoor key access sequence has no effect on the program and erase protection defined in the FPROT register.

It is not possible to unsecure the MCU in special single chip mode by executing the backdoor key access sequence in background debug mode.

### 21.4.4 Flash Reset Sequence

On each reset, the Flash module executes a reset sequence to hold CPU activity while loading the following registers from the Flash array memory according to Table 21-1:

- FPROT — Flash Protection Register (see Section 21.3.2.5)
- FSEC — Flash Security Register (see Section 21.3.2.2)

#### 21.4.4.1 Reset While Flash Command Active

If a reset occurs while any Flash command is in progress, that command will be immediately aborted. The state of the word being programmed or the sector/array being erased is not guaranteed.

### 21.4.5 Interrupts

The Flash module can generate an interrupt when all Flash commands have completed execution or the Flash address, data, and command buffers are empty.

**Table 21-17. Flash Interrupt Sources**

| Interrupt Source | Interrupt Flag | Local Enable | Global (CCR) Mask |
|---|---|---|---|
| Flash Address, Data, and Command Buffers are empty | CBEIF (FSTAT register) | CBEIE | I Bit |
| All Flash commands have completed execution | CCIF (FSTAT register) | CCIE | I Bit |

**NOTE**

Vector addresses and their relative interrupt priority are determined at the MCU level.

#### 21.4.5.1 Description of Interrupt Operation

Figure 21-26 shows the logic used for generating interrupts.

The Flash module uses the CBEIF and CCIF flags in combination with the enable bits CBIE and CCIE to discriminate for the generation of interrupts.

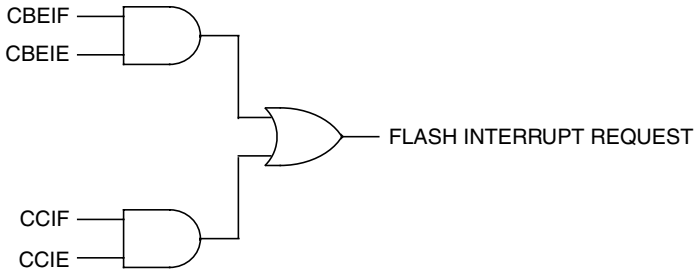


**Figure 21-26. Flash Interrupt Implementation**

For a detailed description of these register bits, refer to Section 21.3.2.4, “Flash Configuration Register (FCNFG)” and Section 21.3.2.6, “Flash Status Register (FSTAT)”.

# Appendix A
# Electrical Characteristics

## A.1 General

**NOTE**

The electrical characteristics given in this section are preliminary and should be used as a guide only. Values cannot be guaranteed by Freescale and are subject to change without notice.

The parts are specified and tested over the 5V and 3.3V ranges. For the intermediate range, generally the electrical specifications for the 3.3V range apply, but the parts are not tested in production test in the intermediate range.

This supplement contains the most accurate electrical information for the MC9S12C-Family / MC9S12GC-Family microcontrollers available at the time of publication. The information should be considered **PRELIMINARY** and is subject to change.

This introduction is intended to give an overview on several common topics like power supply, current injection etc.

### A.1.1 Parameter Classification

The electrical parameters shown in this supplement are guaranteed by various methods. To give the customer a better understanding the following classification is used and the parameters are tagged accordingly in the tables where appropriate.

**NOTE**

This classification will be added at a later release of the specification

P: Those parameters are guaranteed during production testing on each individual device.

C: Those parameters are achieved by the design characterization by measuring a statistically relevant sample size across process variations. They are regularly verified by production monitors.

T: Those parameters are achieved by design characterization on a small sample size from typical devices. All values shown in the typical column are within this category.

D: Those parameters are derived mainly from simulations.

### A.1.2 Power Supply

The MC9S12C-Family / MC9S12GC-Family and MC9S12GC Family members utilize several pins to supply power to the I/O ports, A/D converter, oscillator and PLL as well as the internal logic.

The $V_{DDA}$, $V_{SSA}$ pair supplies the A/D converter.
The $V_{DDX}$, $V_{SSX}$ pair supplies the I/O pins
The $V_{DDR}$, $V_{SSR}$ pair supplies the internal voltage regulator.

$V_{DD1}$, $V_{SS1}$, $V_{DD2}$ and $V_{SS2}$ are the supply pins for the digital logic.
$V_{DDPLL}$, $V_{SSPLL}$ supply the oscillator and the PLL.
$V_{SS1}$ and $V_{SS2}$ are internally connected by metal.
$V_{DD1}$ and $V_{DD2}$ are internally connected by metal.
$V_{DDA}$, $V_{DDX}$, $V_{DDR}$ as well as $V_{SSA}$, $V_{SSX,}$ $V_{SSR}$ are connected by anti-parallel diodes for ESD protection.

**NOTE**

In the following context VDD5 is used for either $V_{DDA}$, $V_{DDR}$, and $V_{DDX}$; $V_{SS5}$ is used for either $V_{SSA}$, $V_{SSR}$, and $V_{SSX}$ unless otherwise noted.

IDD5 denotes the sum of the currents flowing into the $V_{DDA}$, $V_{DDX}$, and $V_{DDR}$ pins.

$V_{DD}$ is used for $V_{DD1}$, $V_{DD2}$, and $V_{DDPLL}$, $V_{SS}$ is used for $V_{SS1}$, $V_{SS2}$, and $V_{SSPLL}$.

$I_{DD}$ is used for the sum of the currents flowing into $V_{DD1}$ and $V_{DD2}$.

## A.1.3 Pins

There are four groups of functional pins.

### A.1.3.1 5V I/O Pins

Those I/O pins have a nominal level of 5V. This class of pins is comprised of all port I/O pins, the analog inputs, BKGD pin, and the RESET inputs.The internal structure of all those pins is identical; however some of the functionality may be disabled. For example, pull-up and pull-down resistors may be disabled permanently.

### A.1.3.2 Analog Reference

This class is made up by the two $V_{RH}$ and $V_{RL}$ pins. In 48- and 52-pin package versions the $V_{RL}$ pad is bonded to the $V_{SSA}$ pin.

### A.1.3.3 Oscillator

The pins XFC, EXTAL, XTAL dedicated to the oscillator have a nominal 2.5V level. They are supplied by $V_{DDPLL}$.

### A.1.3.4 TEST

This pin is used for production testing only.

## A.1.4 Current Injection

Power supply must maintain regulation within operating $V_{DD5}$ or $V_{DD}$ range during instantaneous and operating maximum current conditions. If positive injection current ($V_{in} > V_{DD5}$) is greater than $I_{DD5}$, the

injection current may flow out of $V_{DD5}$ and could result in external power supply going out of regulation. Insure external $V_{DD5}$ load will shunt current greater than maximum injection current. This will be the greatest risk when the MCU is not consuming power; e.g. if no system clock is present, or if clock rate is very low which would reduce overall power consumption.

## A.1.5 Absolute Maximum Ratings

Absolute maximum ratings are stress ratings only. A functional operation under or outside those maxima is not guaranteed. Stress beyond those limits may affect the reliability or cause permanent damage of the device.

This device contains circuitry protecting against damage due to high static voltage or electrical fields; however, it is advised that normal precautions be taken to avoid application of any voltages higher than maximum-rated voltages to this high-impedance circuit. Reliability of operation is enhanced if unused inputs are tied to an appropriate logic voltage level (e.g., either $V_{SS5}$ or $V_{DD5}$).

**Table A-1. Absolute Maximum Ratings**

| Num | Rating | Symbol | Min | Max | Unit |
|---|---|---|---|---|---|
| 1 | I/O, Regulator and Analog Supply Voltage | $V_{DD5}$ | –0.3 | 6.5 | V |
| 2 | Digital Logic Supply Voltage(1) | $V_{DD}$ | –0.3 | 3.0 | V |
| 3 | PLL Supply Voltage [1] | $V_{DDPLL}$ | –0.3 | 3.0 | V |
| 4 | Voltage difference $V_{DDX}$ to $V_{DDR}$ and $V_{DDA}$ | $\Delta_{VDDX}$ | –0.3 | 0.3 | V |
| 5 | Voltage difference $V_{SSX}$ to $V_{SSR}$ and $V_{SSA}$ | $\Delta_{VSSX}$ | –0.3 | 0.3 | V |
| 6 | Digital I/O Input Voltage | $V_{IN}$ | –0.3 | 6.5 | V |
| 7 | Analog Reference | $V_{RH}$, $V_{RL}$ | –0.3 | 6.5 | V |
| 8 | XFC, EXTAL, XTAL inputs | $V_{ILV}$ | –0.3 | 3.0 | V |
| 9 | TEST input | $V_{TEST}$ | –0.3 | 10.0 | V |
| 10 | Instantaneous Maximum Current<br>Single pin limit for all digital I/O pins (2) | $I_D$ | –25 | +25 | mA |
| 11 | Instantaneous Maximum Current<br>Single pin limit for XFC, EXTAL, XTAL(3) | $I_{DL}$ | –25 | +25 | mA |
| 12 | Instantaneous Maximum Current<br>Single pin limit for TEST(4) | $I_{DT}$ | –0.25 | 0 | mA |
| 13 | Operating Temperature Range (packaged) | $T_A$ | – 40 | 125 | °C |
| 14 | Operating Temperature Range (junction) | $T_J$ | – 40 | 140 | °C |
| 15 | Storage Temperature Range | $T_{stg}$ | – 65 | 155 | °C |

1. The device contains an internal voltage regulator to generate the logic and PLL supply out of the I/O supply. The absolute maximum ratings apply when the device is powered from an external source.
2. All digital I/O pins are internally clamped to $V_{SSX}$ and $V_{DDX}$, $V_{SSR}$ and $V_{DDR}$ or $V_{SSA}$ and $V_{DDA}$.
3. These pins are internally clamped to $V_{SSPLL}$ and $V_{DDPLL}$
4. This pin is clamped low to $V_{SSX}$, but not clamped high. This pin must be tied low in applications.

### A.1.6 ESD Protection and Latch-up Immunity

All ESD testing is in conformity with CDF-AEC-Q100 Stress test qualification for Automotive Grade Integrated Circuits. During the device qualification ESD stresses were performed for the Human Body Model (HBM), the Machine Model (MM) and the Charge Device Model.

A device will be defined as a failure if after exposure to ESD pulses the device no longer meets the device specification. Complete DC parametric and functional testing is performed per the applicable device specification at room temperature followed by hot temperature, unless specified otherwise in the device specification.

**Table A-2. ESD and Latch-up Test Conditions**

| Model | Description | Symbol | Value | Unit |
|---|---|---|---|---|
| Human Body | Series Resistance | R1 | 1500 | Ohm |
| | Storage Capacitance | C | 100 | pF |
| | Number of Pulse per pin<br>Positive<br>Negative | <br>—<br>— | <br>3<br>3 | |
| Machine | Series Resistance | R1 | 0 | Ohm |
| | Storage Capacitance | C | 200 | pF |
| | Number of Pulse per pin<br>Positive<br>Negative | <br>—<br>— | <br>3<br>3 | |
| Latch-up | Minimum input voltage limit | — | –2.5 | V |
| | Maximum input voltage limit | — | 7.5 | V |

**Table A-3. ESD and Latch-Up Protection Characteristics**

| Num | C | Rating | Symbol | Min | Max | Unit |
|---|---|---|---|---|---|---|
| 1 | C | Human Body Model (HBM) | $V_{HBM}$ | 2000 | — | V |
| 2 | C | Machine Model (MM) | $V_{MM}$ | 200 | — | V |
| 3 | C | Charge Device Model (CDM) | $V_{CDM}$ | 500 | — | V |
| 4 | C | Latch-up Current at 125°C<br>Positive<br>Negative | $I_{LAT}$ | <br>+100<br>–100 | <br>—<br>— | mA |
| 5 | C | Latch-up Current at 27°C<br>Positive<br>Negative | $I_{LAT}$ | <br>+200<br>–200 | <br>—<br>— | mA |

## A.1.7 Operating Conditions

This chapter describes the operating conditions of the devices. Unless otherwise noted those conditions apply to all the following data.

**NOTE**

Instead of specifying ambient temperature all parameters are specified for the more meaningful silicon junction temperature. For power dissipation calculations refer to Section A.1.8, "Power Dissipation and Thermal Characteristics"

**Table A-4. Operating Conditions**

| Rating | Symbol | Min | Typ | Max | Unit |
|---|---|---|---|---|---|
| I/O, Regulator and Analog Supply Voltage | $V_{DD5}$ | 2.97 | 5 | 5.5 | V |
| Digital Logic Supply Voltage (1) | $V_{DD}$ | 2.35 | 2.5 | 2.75 | V |
| PLL Supply Voltage 1 | $V_{DDPLL}$ | 2.35 | 2.5 | 2.75 | V |
| Voltage Difference $V_{DDX}$ to $V_{DDA}$ | $\Delta_{VDDX}$ | –0.1 | 0 | 0.1 | V |
| Voltage Difference $V_{SSX}$ to $V_{SSR}$ and $V_{SSA}$ | $\Delta_{VSSX}$ | –0.1 | 0 | 0.1 | V |
| Bus Frequency | $f_{bus}$ (2) | 0.25 | — | 25 | MHz |
| Bus Frequency | $f_{bus}$ (3) | 0.25 | — | 16 | MHz |
| Operating Junction Temperature Range | $T_J$ | –40 | — | 140 | °C |

1. The device contains an internal voltage regulator to generate the logic and PLL supply out of the I/O supply. The operating conditions apply when this regulator is disabled and the device is powered from an external source.
   Using an external regulator, with the internal voltage regulator disabled, an external LVR must be provided.
2. Some blocks e.g. ATD (conversion) and NVMs (program/erase) require higher bus frequencies for proper operation.
3. Some blocks e.g. ATD (conversion) and NVMs (program/erase) require higher bus frequencies for proper operation.

### A.1.8 Power Dissipation and Thermal Characteristics

Power dissipation and thermal characteristics are closely related. The user must assure that the maximum operating junction temperature is not exceeded. The average chip-junction temperature ($T_J$) in °C can be obtained from:

$$T_J = T_A + (P_D \bullet \Theta_{JA})$$

$T_J$ = Junction Temperature, [°C]

$T_A$ = Ambient Temperature, [°C]

$P_D$ = Total Chip Power Dissipation, [W]

$\Theta_{JA}$ = Package Thermal Resistance, [°C/W]

The total power dissipation can be calculated from:

$$P_D = P_{INT} + P_{IO}$$

$P_{INT}$ = Chip Internal Power Dissipation, [W]

Two cases with internal voltage regulator enabled and disabled must be considered:

1. Internal Voltage Regulator disabled

$$P_{INT} = I_{DD} \cdot V_{DD} + I_{DDPLL} \cdot V_{DDPLL} + I_{DDA} \cdot V_{DDA}$$

$$P_{IO} = \sum_i R_{DSON} \cdot I_{IO_i}^2$$

Which is the sum of all output currents on I/O ports associated with $V_{DDX}$ and $V_{DDM}$.
For $R_{DSON}$ is valid:

$$R_{DSON} = \frac{V_{OL}}{I_{OL}} \text{;for outputs driven low}$$

respectively

$$R_{DSON} = \frac{V_{DD5} - V_{OH}}{I_{OH}} \text{;for outputs driven high}$$

2. Internal voltage regulator enabled

$$P_{INT} = I_{DDR} \cdot V_{DDR} + I_{DDA} \cdot V_{DDA}$$

$I_{DDR}$ is the current shown in Table A-8 and not the overall current flowing into VDDR, which additionally contains the current flowing into the external loads with output high.

$$P_{IO} = \sum_i R_{DSON} \cdot I_{IO_i}^2$$

Which is the sum of all output currents on I/O ports associated with $V_{DDX}$ and $V_{DDR}$.

**Table A-5. Thermal Package Characteristics[1]**

| Num | C | Rating | Symbol | Min | Typ | Max | Unit |
|---|---|---|---|---|---|---|---|
| 1 | T | Thermal Resistance LQFP48, single layer PCB[2] | $\theta_{JA}$ | — | — | 69 | °C/W |
| 2 | T | Thermal Resistance LQFP48, double sided PCB with 2 internal planes[3] | $\theta_{JA}$ | — | — | 53 | °C/W |
| 3 | T | Junction to Board LQFP48 | $\theta_{JB}$ | — | — | 30 | °C/W |
| 4 | T | Junction to Case LQFP48 | $\theta_{JC}$ | — | — | 20 | °C/W |
| 5 | T | Junction to Package Top LQFP48 | $\Psi_{JT}$ | — | — | 4 | °C/W |
| 6 | T | Thermal Resistance LQFP52, single sided PCB | $\theta_{JA}$ | — | — | 65 | °C/W |
| 7 | T | Thermal Resistance LQFP52, double sided PCB with 2 internal planes | $\theta_{JA}$ | — | — | 49 | °C/W |
| 8 | T | Junction to Board LQFP52 | $\theta_{JB}$ | — | — | 31 | °C/W |
| 9 | T | Junction to Case LQFP52 | $\theta_{JC}$ | — | — | 17 | °C/W |
| 10 | T | Junction to Package Top LQFP52 | $\Psi_{JT}$ | — | — | 3 | °C/W |
| 11 | T | Thermal Resistance QFP 80, single sided PCB | $\theta_{JA}$ | — | — | 52 | °C/W |
| 12 | T | Thermal Resistance QFP 80, double sided PCB with 2 internal planes | $\theta_{JA}$ | — | — | 42 | °C/W |
| 13 | T | Junction to Board QFP80 | $\theta_{JB}$ | — | — | 28 | °C/W |
| 14 | T | Junction to Case QFP80 | $\theta_{JC}$ | — | — | 18 | °C/W |
| 15 | T | Junction to Package Top QFP80 | $\Psi_{JT}$ | — | — | 4 | °C/W |

1. The values for thermal resistance are achieved by package simulations
2. PC Board according to EIA/JEDEC Standard 51-2
3. PC Board according to EIA/JEDEC Standard 51-7

## A.1.9 I/O Characteristics

This section describes the characteristics of all I/O pins. All parameters are not always applicable, e.g. not all pins feature pull up/down resistances.

**Table A-6. 5V I/O Characteristics**

| Conditions are 4.5< $V_{DDX}$ <5.5V Temperature from –40˚C to +140˚C, unless otherwise noted | | | | | | | |
|---|---|---|---|---|---|---|---|
| **Num** | **C** | **Rating** | **Symbol** | **Min** | **Typ** | **Max** | **Unit** |
| 1 | P | Input High Voltage | $V_{IH}$ | 0.65*$V_{DD5}$ | — | — | V |
| | T | Input High Voltage | $V_{IH}$ | — | — | $V_{DD5}$ + 0.3 | V |
| 2 | P | Input Low Voltage | $V_{IL}$ | — | — | 0.35*$V_{DD5}$ | V |
| | T | Input Low Voltage | $V_{IL}$ | $V_{SS5}$ - 0.3 | — | — | V |
| 3 | C | Input Hysteresis | $V_{HYS}$ | | 250 | — | mV |
| 4 | P | Input Leakage Current (pins in high ohmic input mode)[1]<br>$V_{in}$ = $V_{DD5}$ or $V_{SS5}$ | $I_{in}$ | — | — | 1 | µA |
| 5 | C | Output High Voltage (pins in output mode)<br>Partial Drive $I_{OH}$ = –2mA | $V_{OH}$ | $V_{DD5}$ – 0.8 | — | — | V |
| 6 | P | Output High Voltage (pins in output mode)<br>Full Drive $I_{OH}$ = –10mA | $V_{OH}$ | $V_{DD5}$ – 0.8 | — | — | V |
| 7 | C | Output Low Voltage (pins in output mode)<br>Partial Drive $I_{OL}$ = +2mA | $V_{OL}$ | — | — | 0.8 | V |
| 8 | P | Output Low Voltage (pins in output mode)<br>Full Drive $I_{OL}$ = +10mA | $V_{OL}$ | — | — | 0.8 | V |
| 9 | P | Internal Pull Up Device Current,<br>tested at $V_{IL}$ Max. | $I_{PUL}$ | — | — | –130 | µA |
| 10 | C | Internal Pull Up Device Current,<br>tested at $V_{IH}$ Min. | $I_{PUH}$ | –10 | — | — | µA |
| 11 | P | Internal Pull Down Device Current,<br>tested at $V_{IH}$ Min. | $I_{PDH}$ | — | — | 130 | µA |
| 12 | C | Internal Pull Down Device Current,<br>tested at $V_{IL}$ Max. | $I_{PDL}$ | 10 | — | — | µA |
| 13 | D | Input Capacitance | $C_{in}$ | — | 7 | — | pf |
| 14 | T | Injection current[2]<br>Single Pin limit<br>Total Device Limit. Sum of all injected currents | <br>$I_{ICS}$<br>$I_{ICP}$ | <br>–2.5<br>–25 | <br>—<br>— | <br>2.5<br>25 | mA |
| 15 | P | Port P, J Interrupt Input Pulse filtered[3] | $t_{PIGN}$ | — | — | 3 | µs |
| 16 | P | Port P, J Interrupt Input Pulse passed[3] | $t_{PVAL}$ | 10 | — | — | µs |

1. Maximum leakage current occurs at maximum operating temperature. Current decreases by approximately one-half for each 8 C to 12 C in the temperature range from 50 C to 125 C
2. Refer to Section A.1.4, “Current Injection”, for more details
3. Parameter only applies in STOP or Pseudo STOP mode.

**Table A-7. 3.3V I/O Characteristics**

| Conditions are $V_{DDX}$=3.3V +/-10%, Temperature from –40˚C to +140˚C, unless otherwise noted | | | | | | | |
|---|---|---|---|---|---|---|---|
| **Num** | **C** | **Rating** | **Symbol** | **Min** | **Typ** | **Max** | **Unit** |
| 1 | P | Input High Voltage | $V_{IH}$ | 0.65*$V_{DD5}$ | — | — | V |
| | T | Input High Voltage | $V_{IH}$ | — | — | $V_{DD5}$ + 0.3 | V |
| 2 | P | Input Low Voltage | $V_{IL}$ | — | — | 0.35*$V_{DD5}$ | V |
| | T | Input Low Voltage | $V_{IL}$ | $V_{SS5}$ – 0.3 | — | — | V |
| 3 | C | Input Hysteresis | $V_{HYS}$ | — | 250 | — | mV |
| 4 | P | Input Leakage Current (pins in high ohmic input mode)[1]<br>$V_{in}$ = $V_{DD5}$ or $V_{SS5}$ | $I_{in}$ | –1 | — | 1 | µA |
| 5 | C | Output High Voltage (pins in output mode)<br>Partial Drive $I_{OH}$ = –0.75mA | $V_{OH}$ | $V_{DD5}$ – 0.4 | — | — | V |
| 6 | P | Output High Voltage (pins in output mode)<br>Full Drive $I_{OH}$ = –4mA | $V_{OH}$ | $V_{DD5}$ – 0.4 | — | — | V |
| 7 | C | Output Low Voltage (pins in output mode)<br>Partial Drive $I_{OL}$ = +0.9mA | $V_{OL}$ | — | — | 0.4 | V |
| 8 | P | Output Low Voltage (pins in output mode)<br>Full Drive $I_{OL}$ = +4.75mA | $V_{OL}$ | — | — | 0.4 | V |
| 9 | P | Internal Pull Up Device Current, tested at $V_{IL}$ Max. | $I_{PUL}$ | — | — | –60 | µA |
| 10 | C | Internal Pull Up Device Current, tested at $V_{IH}$ Min. | $I_{PUH}$ | -6 | — | — | µA |
| 11 | P | Internal Pull Down Device Current, tested at $V_{IH}$ Min. | $I_{PDH}$ | — | — | 60 | µA |
| 12 | C | Internal Pull Down Device Current, tested at $V_{IL}$ Max. | $I_{PDL}$ | 6 | — | — | µA |
| 11 | D | Input Capacitance | $C_{in}$ | — | 7 | — | πΦ |
| 12 | T | Injection current[2]<br>Single Pin limit<br>Total Device Limit. Sum of all injected currents | <br>$I_{ICS}$<br>$I_{ICP}$ | <br>–2.5<br>–25 | — | <br>2.5<br>25 | µA |
| 13 | P | Port P, J Interrupt Input Pulse filtered[3] | $t_{PIGN}$ | — | — | 3 | µs |
| 14 | P | Port P, J Interrupt Input Pulse passed[3] | $t_{PVAL}$ | 10 | — | — | µs |

1. Maximum leakage current occurs at maximum operating temperature. Current decreases by approximately one-half for each 8 C to 12 C in the temperature range from 50 C to 125 C
2. Refer to Section A.1.4, “Current Injection”, for more details
3. Parameter only applies in STOP or Pseudo STOP mode.

## A.1.10 Supply Currents

This section describes the current consumption characteristics of the device as well as the conditions for the measurements.

### A.1.10.1 Measurement Conditions

All measurements are without output loads. Unless otherwise noted the currents are measured in single chip mode, internal voltage regulator enabled and at 25MHz bus frequency using a 4MHz oscillator.

### A.1.10.2 Additional Remarks

In expanded modes the currents flowing in the system are highly dependent on the load at the address, data and control signals as well as on the duty cycle of those signals. No generally applicable numbers can be given. A very good estimate is to take the single chip currents and add the currents due to the external loads.

**Table A-8. Supply Current Characteristics for MC9S12CG16 MC9S12C32**

| Conditions are shown in Table A-4 with internal regulator enabled unless otherwise noted | | | | | | | |
|---|---|---|---|---|---|---|---|
| **Num** | **C** | **Rating** | **Symbol** | **Min** | **Typ** | **Max** | **Unit** |
| 1 | P | Run Supply Current Single Chip | $I_{DD5}$ | — | — | 35 | mA |
| 2 | | Wait Supply current | $I_{DDW}$ | | | | mA |
| | P | All modules enabled | | — | | 30 | |
| | P | $V_{DDR}$<4.9V, only RTI enabled[2] | | — | 3.5 | 8 | |
| | C | $V_{DDR}$>4.9V, only RTI enabled | | — | 2.5 | | |
| 3 | | Pseudo Stop Current (RTI and COP disabled)[2 3] | $I_{DDPS}$[(1)] | | | | µA |
| | C | –40°C | | — | 340 | — | |
| | P | 27°C | | — | 360 | 450 | |
| | C | 85°C | | — | 500 | — | |
| | P | "C" Temp Option 100˚C | | — | 550 | 1450 | |
| | C | 105°C | | — | 590 | — | |
| | P | "V" Temp Option 120˚C | | — | 720 | 1900 | |
| | C | 125°C | | — | 780 | — | |
| | P | "M" Temp Option 140°C | | — | 1100 | 4500 | |
| 4 | | Pseudo Stop Current (RTI and COP enabled)[(2) (3)] | $I_{DDPS}$[1] | | | | µA |
| | C | –40°C | | — | 540 | — | |
| | C | 27°C | | — | 700 | — | |
| | C | 85°C | | — | 750 | — | |
| | C | 105°C | | — | 880 | — | |
| | C | 125°C | | — | 1300 | — | |
| 5 | | Stop Current [3] | $I_{DDS}$[1] | | | | µA |
| | C | –40°C | | — | 10 | — | |
| | P | 27°C | | — | 20 | 80 | |
| | C | 85°C | | — | 100 | — | |
| | P | "C" Temp Option 100˚C | | — | 140 | 1000 | |
| | C | 105°C | | — | 170 | — | |
| | P | "V" Temp Option 120˚C | | — | 300 | 1400 | |
| | C | 125°C | | — | 350 | — | |
| | P | "M" Temp Option 140°C | | — | 520 | 4000 | |

1. STOP current measured in production test at increased junction temperature, hence for Temp Option "C" the test is carried out at 100˚C although the Temperature specification is 85˚C. Similarly for "v" and "M" options the temperature used in test lies 15˚C above the temperature option specification.
2. PLL off
3. At those low power dissipation levels $T_J = T_A$ can be assumed

**Table A-9. Supply Current Characteristics for Other Family Members**

| Conditions are shown in Table A-4 with internal regulator enabled unless otherwise noted | | | | | | | |
|---|---|---|---|---|---|---|---|
| **Num** | **C** | **Rating** | **Symbol** | **Min** | **Typ** | **Max** | **Unit** |
| 1 | P | Run Supply Current Single Chip, | $I_{DD5}$ | — | — | 45 | mA |
| 2 | | Wait Supply current | $I_{DDW}$ | | | | mA |
| | P | All modules enabled | | — | — | 33 | |
| | P | VDDR<4.9V, only RTI enabled[2] | | — | 2.5 | 8 | |
| | C | VDDR>4.9V, only RTI enabled | | — | 3.5 | — | |
| 6 | | Pseudo Stop Current (RTI and COP disabled)[23] | $I_{DDPS}$[(1)] | | | | µA |
| | C | –40°C | | — | 190 | — | |
| | P | 27°C | | — | 200 | 250 | |
| | C | 85°C | | — | 300 | — | |
| | P | "C" Temp Option 100˚C | | — | 400 | 1400 | |
| | C | 105°C | | — | 450 | — | |
| | P | "V" Temp Option 120˚C | | — | 600 | 1900 | |
| | C | 125°C | | — | 650 | — | |
| | P | "M" Temp Option 140°C | | — | 1000 | 4800 | |
| 4 | | Pseudo Stop Current (RTI and COP enabled)[(2) (3)] | $I_{DDPS}$[1] | | | | µA |
| | C | –40°C | | — | 370 | — | |
| | C | 27°C | | — | 500 | — | |
| | C | 85°C | | — | 590 | — | |
| | C | 105°C | | — | 780 | — | |
| | C | 125°C | | — | 1200 | — | |
| 5 | | Stop Current [3] | $I_{DDS}$[1] | | | | µA |
| | C | –40°C | | — | 12 | — | |
| | P | 27°C | | — | 25 | 100 | |
| | C | 85°C | | — | 130 | — | |
| | P | "C" Temp Option 100˚C | | — | 160 | 1200 | |
| | C | 105°C | | — | 200 | — | |
| | P | "V" Temp Option 120˚C | | — | 350 | 1700 | |
| | C | 125°C | | — | 400 | — | |
| | P | "M" Temp Option 140°C | | — | 600 | 4500 | |

1. STOP current measured in production test at increased junction temperature, hence for Temp Option "C" the test is carried out at 100˚C although the Temperature specification is 85˚C. Similarly for "v" and "M" options the temperature used in test lies 15˚C above the temperature option specification.
2. PLL off
3. At those low power dissipation levels $T_J = T_A$ can be assumed

## A.2 ATD Characteristics

This section describes the characteristics of the analog-to-digital converter.

$V_{RL}$ is not available as a separate pin in the 48- and 52-pin versions. In this case the internal $V_{RL}$ pad is bonded to the $V_{SSA}$ pin.

The ATD is specified and tested for both the 3.3V and 5V range. For ranges between 3.3V and 5V the ATD accuracy is generally the same as in the 3.3V range but is not tested in this range in production test.

### A.2.1 ATD Operating Characteristics In 5V Range

The Table A-10 shows conditions under which the ATD operates.

The following constraints exist to obtain full-scale, full range results: $V_{SSA} \leq V_{RL} \leq V_{IN} \leq V_{RH} \leq V_{DDA}$. This constraint exists since the sample buffer amplifier can not drive beyond the power supply levels that it ties to. If the input level goes outside of this range it will effectively be clipped.

**Table A-10. ATD Operating Characteristics**

Conditions are shown in Table A-4 unless otherwise noted. Supply Voltage 5V-10% <= $V_{DDA}$ <=5V+10%

| Num | C | Rating | Symbol | Min | Typ | Max | Unit |
|---|---|---|---|---|---|---|---|
| 1 | D | Reference Potential<br>Low<br>High | <br>$V_{RL}$<br>$V_{RH}$ | <br>$V_{SSA}$<br>$V_{DDA/2}$ | <br>—<br>— | <br>$V_{DDA/2}$<br>$V_{DDA}$ | <br>V<br>V |
| 2 | C | Differential Reference Voltage(1) | $V_{RH}$-$V_{RL}$ | 4.75 | 5.0 | 5.25 | V |
| 3 | D | ATD Clock Frequency | $f_{ATDCLK}$ | 0.5 | — | 2.0 | MHz |
| 4 | D | ATD 10-Bit Conversion Period<br>Clock Cycles(2)<br>Conv, Time at 2.0MHz ATD Clock $f_{ATDCLK}$ | <br>$N_{CONV10}$<br>$T_{CONV10}$ | <br>14<br>7 | <br>—<br>— | <br>28<br>14 | <br>Cycles<br>µs |
| 5 | D | ATD 8-Bit Conversion Period<br>Clock Cycles2<br>Conv, Time at 2.0MHz ATD Clock $f_{ATDCLK}$ | <br>$N_{CONV10}$<br>$T_{CONV10}$ | <br>12<br>6 | <br>—<br>— | <br>26<br>13 | <br>Cycles<br>µs |
| 5 | D | Recovery Time ($V_{DDA}$=5.0 Volts) | $t_{REC}$ | — | — | 20 | µs |
| 6 | P | Reference Supply current | $I_{REF}$ | — | — | 0.375 | mA |

1. Full accuracy is not guaranteed when differential voltage is less than 4.75V
2. The minimum time assumes a final sample period of 2 ATD clocks cycles while the maximum time assumes a final sample period of 16 ATD clocks.

### A.2.2 ATD Operating Characteristics In 3.3V Range

The Table A-11 shows conditions under which the ATD operates.

The following constraints exist to obtain full-scale, full range results: $V_{SSA} \leq V_{RL} \leq V_{IN} \leq V_{RH} \leq V_{DDA}$. This constraint exists since the sample buffer amplifier can not drive beyond the power supply levels that it ties to. If the input level goes outside of this range it will effectively be clipped

**Table A-11. ATD Operating Characteristics**

| Conditions are shown in Table A-4 unless otherwise noted; Supply Voltage 3.3V-10% <= $V_{DDA}$ <= 3.3V+10% | | | | | | | |
|---|---|---|---|---|---|---|---|
| **Num** | **C** | **Rating** | **Symbol** | **Min** | **Typ** | **Max** | **Unit** |
| 1 | D | Reference Potential<br>Low<br>High | <br>$V_{RL}$<br>$V_{RH}$ | <br>$V_{SSA}$<br>$V_{DDA}/2$ | <br>—<br>— | <br>$V_{DDA}/2$<br>$V_{DDA}$ | <br>V<br>V |
| 2 | C | Differential Reference Voltage | $V_{RH}$-$V_{RL}$ | 3.0 | 3.3 | 3.6 | V |
| 3 | D | ATD Clock Frequency | $f_{ATDCLK}$ | 0.5 | — | 2.0 | MHz |
| 4 | D | ATD 10-Bit Conversion Period<br>Clock Cycles(1)<br>Conv, Time at 2.0MHz ATD Clock $f_{ATDCLK}$ | <br>$N_{CONV10}$<br>$T_{CONV10}$ | <br>14<br>7 | <br>—<br>— | <br>28<br>14 | <br>Cycles<br>µs |
| 5 | D | ATD 8-Bit Conversion Period<br>Clock Cycles1<br>Conv, Time at 2.0MHz ATD Clock $f_{ATDCLK}$ | <br>$N_{CONV8}$<br>$T_{CONV8}$ | <br>12<br>6 | <br>—<br>— | <br>26<br>13 | <br>Cycles<br>µs |
| 6 | D | Recovery Time ($V_{DDA}$=3.3 Volts) | $t_{REC}$ | — | — | 20 | µs |
| 7 | P | Reference Supply current | $I_{REF}$ | — | — | 0.250 | mA |

1. The minimum time assumes a final sample period of 2 ATD clocks cycles while the maximum time assumes a final sample period of 16 ATD clocks.

### A.2.3 Factors Influencing Accuracy

Three factors — source resistance, source capacitance and current injection — have an influence on the accuracy of the ATD.

#### A.2.3.1 Source Resistance

Due to the input pin leakage current as specified in Table A-6 in conjunction with the source resistance there will be a voltage drop from the signal source to the ATD input. The maximum source resistance $R_S$ specifies results in an error of less than 1/2 LSB (2.5mV) at the maximum leakage current. If device or operating conditions are less than worst case or leakage-induced error is acceptable, larger values of source resistance is allowable.

#### A.2.3.2 Source Capacitance

When sampling an additional internal capacitor is switched to the input. This can cause a voltage drop due to charge sharing with the external and the pin capacitance. For a maximum sampling error of the input voltage ≤ 1LSB, then the external filter capacitor, $C_f \geq 1024 * (C_{INS} - C_{INN})$.

### A.2.3.3 Current Injection

There are two cases to consider.

1. A current is injected into the channel being converted. The channel being stressed has conversion values of $3FF ($FF in 8-bit mode) for analog inputs greater than $V_{RH}$ and $000 for values less than $V_{RL}$ unless the current is higher than specified as disruptive conditions.
2. Current is injected into pins in the neighborhood of the channel being converted. A portion of this current is picked up by the channel (coupling ratio K), This additional current impacts the accuracy of the conversion depending on the source resistance.

   The additional input voltage error on the converted channel can be calculated as $V_{ERR} = K * R_S * I_{INJ}$, with $I_{INJ}$ being the sum of the currents injected into the two pins adjacent to the converted channel.

**Table 21-18. ATD Electrical Characteristics**

| Conditions are shown in Table A-4 unless otherwise noted | | | | | | | |
|---|---|---|---|---|---|---|---|
| **Num** | **C** | **Rating** | **Symbol** | **Min** | **Typ** | **Max** | **Unit** |
| 1 | C | Max input Source Resistance | $R_S$ | — | — | 1 | KΩ |
| 2 | T | Total Input Capacitance<br>Non Sampling<br>Sampling | <br>$C_{INN}$<br>$C_{INS}$ | <br>—<br>— | <br>—<br>— | <br>10<br>15 | pF |
| 3 | C | Disruptive Analog Input Current | $I_{NA}$ | –2.5 | — | 2.5 | mA |
| 4 | C | Coupling Ratio positive current injection | $K_p$ | — | — | $10^{-4}$ | A/A |
| 5 | C | Coupling Ratio negative current injection | $K_n$ | — | — | $10^{-2}$ | A/A |

## A.2.4 ATD Accuracy (5V Range)

Table A-12 specifies the ATD conversion performance excluding any errors due to current injection, input capacitance and source resistance

**Table A-12. ATD Conversion Performance**

| Conditions are shown in Table A-4 unless otherwise noted<br>$V_{REF} = V_{RH} – V_{RL}$ = 5.12V. Resulting to one 8 bit count = 20mV and one 10 bit count = 5mV<br>$f_{ATDCLK}$ = 2.0MHz | | | | | | | |
|---|---|---|---|---|---|---|---|
| **Num** | **C** | **Rating** | **Symbol** | **Min** | **Typ** | **Max** | **Unit** |
| 1 | P | 10-Bit Resolution | LSB | — | 5 | — | mV |
| 2 | P | 10-Bit Differential Nonlinearity | DNL | –1 | — | 1 | Counts |
| 3 | P | 10-Bit Integral Nonlinearity | INL | –2 | — | 2 | Counts |
| 4 | P | 10-Bit Absolute Error(1) | AE | -2.5 | — | 2.5 | Counts |
| 5 | P | 8-Bit Resolution | LSB | — | 20 | — | mV |
| 6 | P | 8-Bit Differential Nonlinearity | DNL | –0.5 | — | 0.5 | Counts |
| 7 | P | 8-Bit Integral Nonlinearity | INL | –1.0 | ±0.5 | 1.0 | Counts |
| 8 | P | 8-Bit Absolute Error[1] | AE | -1.5 | ±1 | 1.5 | Counts |

1. These values include quantization error which is inherently 1/2 count for any A/D converter.

### A.2.5 ATD Accuracy (3.3V Range)

Table A-13 specifies the ATD conversion performance excluding any errors due to current injection, input capacitance and source resistance.

**Table A-13. ATD Conversion Performance**

Conditions are shown in Table A-4 unless otherwise noted
$V_{REF} = V_{RH} - V_{RL} = 3.328V$. Resulting to one 8 bit count = 13mV and one 10 bit count = 3.25mV
$f_{ATDCLK} = 2.0MHz$

| Num | C | Rating | Symbol | Min | Typ | Max | Unit |
|---|---|---|---|---|---|---|---|
| 1 | P | 10-Bit Resolution | LSB | — | 3.25 | — | mV |
| 2 | P | 10-Bit Differential Nonlinearity | DNL | –1.5 | — | 1.5 | Counts |
| 3 | P | 10-Bit Integral Nonlinearity | INL | –3.5 | ±1.5 | 3.5 | Counts |
| 4 | P | 10-Bit Absolute Error(1) | AE | –5 | ±2.5 | 5 | Counts |
| 5 | P | 8-Bit Resolution | LSB | — | 13 | — | mV |
| 6 | P | 8-Bit Differential Nonlinearity | DNL | –0.5 | — | 0.5 | Counts |
| 7 | P | 8-Bit Integral Nonlinearity | INL | –1.5 | ±1 | 1.5 | Counts |
| 8 | P | 8-Bit Absolute Error[1] | AE | –2.0 | ±1.5 | 2.0 | Counts |

1. These values include the quantization error which is inherently 1/2 count for any A/D converter.

For the following definitions see also Figure A-1.

Differential Non-Linearity (DNL) is defined as the difference between two adjacent switching steps.

$$DNL(i) = \frac{V_i - V_{i-1}}{1LSB} - 1$$

The Integral Non-Linearity (INL) is defined as the sum of all DNLs:

$$INL(n) = \sum_{i=1}^{n} DNL(i) = \frac{V_n - V_0}{1LSB} - n$$

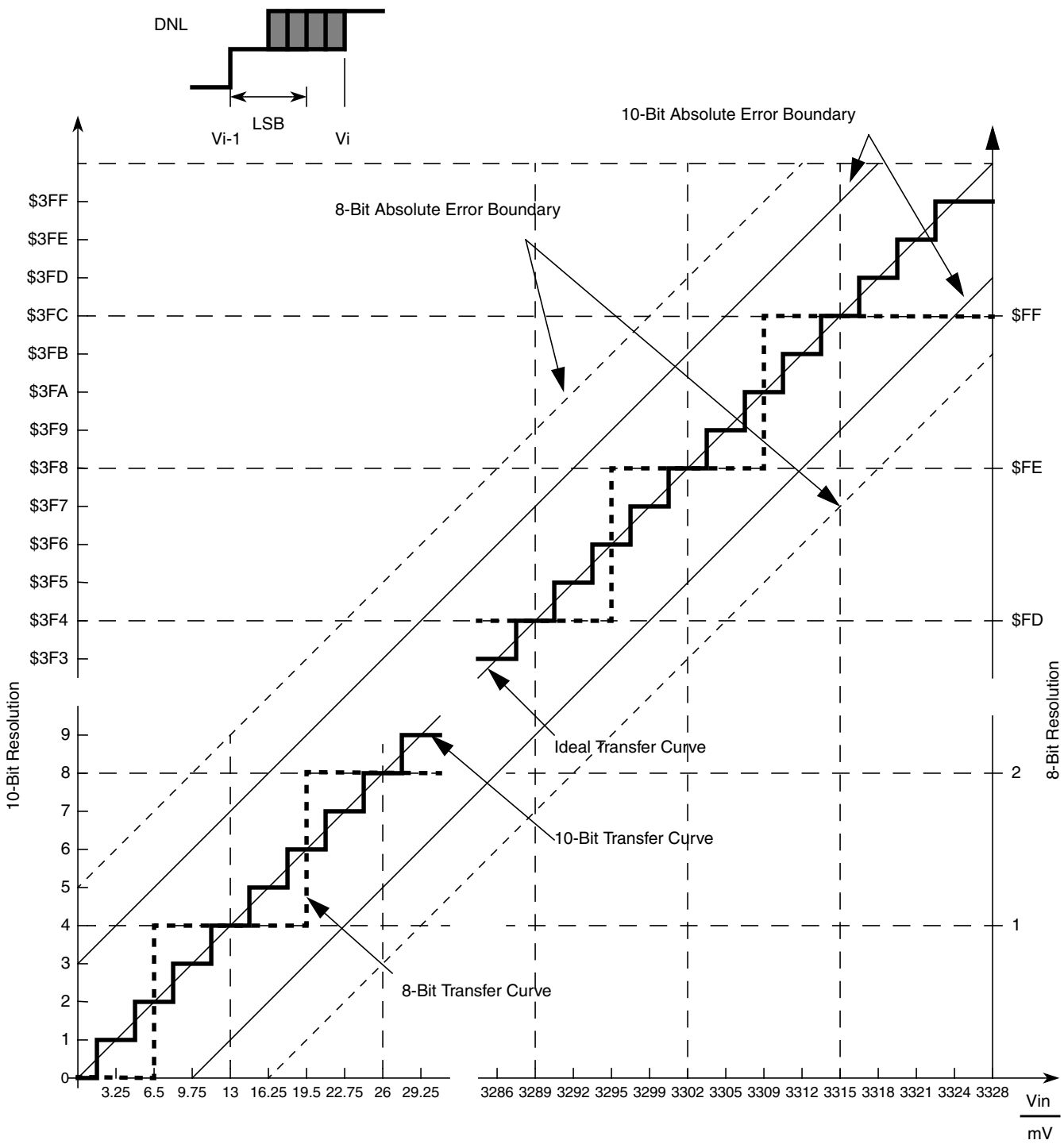


**Figure A-1. ATD Accuracy Definitions**

**NOTE**

Figure A-1 shows only definitions, for specification values refer to Table A-12.

## A.3 MSCAN

**Table A-14. MSCAN Wake-up Pulse Characteristics**

| Conditions are shown in Table A-4 unless otherwise noted | | | | | | | |
|---|---|---|---|---|---|---|---|
| **Num** | **C** | **Rating** | **Symbol** | **Min** | **Typ** | **Max** | **Unit** |
| 1 | P | MSCAN Wake-up dominant pulse filtered | $t_{WUP}$ | — | — | 2 | us |
| 2 | P | MSCAN Wake-up dominant pulse pass | $t_{WUP}$ | 5 | — | — | us |

## A.4 Reset, Oscillator and PLL

This section summarizes the electrical characteristics of the various startup scenarios for Oscillator and Phase-Locked-Loop (PLL).

### A.4.1 Startup

Table A-15 summarizes several startup characteristics explained in this section. Detailed description of the startup behavior can be found in the Clock and Reset Generator (CRG) Block User Guide.

**Table A-15. Startup Characteristics**

| Conditions are shown in Table A-4 unless otherwise noted | | | | | | | |
|---|---|---|---|---|---|---|---|
| **Num** | **C** | **Rating** | **Symbol** | **Min** | **Typ** | **Max** | **Unit** |
| 1 | T | POR release level | $V_{PORR}$ | — | — | 2.07 | V |
| 2 | T | POR assert level | $V_{PORA}$ | 0.97 | — | — | V |
| 3 | D | Reset input pulse width, minimum input time | $PW_{RSTL}$ | 2 | — | — | $t_{osc}$ |
| 4 | D | Startup from Reset | $n_{RST}$ | 192 | — | 196 | $n_{osc}$ |
| 5 | D | Interrupt pulse width, $\overline{IRQ}$ edge-sensitive mode | $PW_{IRQ}$ | 20 | — | — | ns |
| 6 | D | Wait recovery startup time | $t_{WRS}$ | — | — | 14 | $t_{cyc}$ |

#### A.4.1.1 POR

The release level $V_{PORR}$ and the assert level $V_{PORA}$ are derived from the $V_{DD}$ supply. They are also valid if the device is powered externally. After releasing the POR reset the oscillator and the clock quality check are started. If after a time $t_{CQOUT}$ no valid oscillation is detected, the MCU will start using the internal self clock. The fastest startup time possible is given by $n_{uposc}$.

#### A.4.1.2 LVR

The release level $V_{LVRR}$ and the assert level $V_{LVRA}$ are derived from the $V_{DD}$ supply. They are also valid if the device is powered externally. After releasing the LVR reset the oscillator and the clock quality check are started. If after a time $t_{CQOUT}$ no valid oscillation is detected, the MCU will start using the internal self clock. The fastest startup time possible is given by $n_{uposc}$.

#### A.4.1.3 SRAM Data Retention

Provided an appropriate external reset signal is applied to the MCU, preventing the CPU from executing code when $V_{DD5}$ is out of specification limits, the SRAM contents integrity is guaranteed if after the reset the PORF bit in the CRG Flags Register has not been set.

#### A.4.1.4 External Reset

When external reset is asserted for a time greater than $PW_{RSTL}$ the CRG module generates an internal reset, and the CPU starts fetching the reset vector without doing a clock quality check, if there was an oscillation before reset.

#### A.4.1.5 Stop Recovery

Out of STOP the controller can be woken up by an external interrupt. A clock quality check as after POR is performed before releasing the clocks to the system.

#### A.4.1.6 Pseudo Stop and Wait Recovery

The recovery from Pseudo STOP and Wait are essentially the same since the oscillator was not stopped in both modes. In Pseudo Stop Mode the voltage regulator is switched to reduced performance mode to reduce power consumption. The returning out of pseudo stop to full performance takes $t_{vup}$. The controller can be woken up by internal or external interrupts.After $t_{wrs}$ in Wait or $t_{vup} + t_{wrs}$ in Pseudo Stop the CPU starts fetching the interrupt vector.

### A.4.2 Oscillator

The device features an internal Colpitts and Pierce oscillator. The selection of Colpitts oscillator or Pierce oscillator/external clock depends on the XCLKS signal which is sampled during reset. Pierce oscillator/external clock mode allows the input of a square wave. Before asserting the oscillator to the internal system clocks the quality of the oscillation is checked for each start from either power-on, STOP or oscillator fail. $t_{CQOUT}$ specifies the maximum time before switching to the internal self clock mode after POR or STOP if a proper oscillation is not detected. The quality check also determines the minimum oscillator start-up time $t_{UPOSC}$. The device also features a clock monitor. A Clock Monitor Failure is asserted if the frequency of the incoming clock signal is below the Assert Frequency $f_{CMFA.}$

**Table A-16. Oscillator Characteristics**

| Conditions are shown in Table A-4 unless otherwise noted | | | | | | | |
|---|---|---|---|---|---|---|---|
| **Num** | **C** | **Rating** | **Symbol** | **Min** | **Typ** | **Max** | **Unit** |
| 1a | C | Crystal oscillator range (Colpitts) | $f_{OSC}$ | 0.5 | — | 16 | MHz |
| 1b | C | Crystal oscillator range (Pierce) (1) 4 | $f_{OSC}$ | 0.5 | — | 40 | MHz |
| 2 | P | Startup Current | $i_{OSC}$ | 100 | — | — | µA |
| 3 | C | Oscillator start-up time (Colpitts) | $t_{UPOSC}$ | — | 8(2) | 100(3) | ms |
| 4 | D | Clock Quality check time-out | $t_{CQOUT}$ | 0.45 | — | 2.5 | s |
| 5 | P | Clock Monitor Failure Assert Frequency | $f_{CMFA}$ | 50 | 100 | 200 | KHz |
| 6 | P | External square wave input frequency (4) | $f_{EXT}$ | 0.5 | — | 50 | MHz |
| 7 | D | External square wave pulse width low | $t_{EXTL}$ | 9.5 | — | — | ns |
| 8 | D | External square wave pulse width high | $t_{EXTH}$ | 9.5 | — | — | ns |
| 9 | D | External square wave rise time | $t_{EXTR}$ | — | — | 1 | ns |
| 10 | D | External square wave fall time | $t_{EXTF}$ | — | — | 1 | ns |
| 11 | D | Input Capacitance (EXTAL, XTAL pins) | $C_{IN}$ | — | 7 | — | pF |
| 12 | C | DC Operating Bias in Colpitts Configuration on EXTAL Pin | $V_{DCBIAS}$ | — | 1.1 | — | V |
| 13 | P | EXTAL Pin Input High Voltage[4] | $V_{IH,EXTAL}$ | 0.75* $V_{DDPLL}$ | — | — | V |
| | T | EXTAL Pin Input High Voltage[4] | $V_{IH,EXTAL}$ | — | — | $V_{DDPLL}$+0.3 | V |
| 14 | P | EXTAL Pin Input Low Voltage[4] | $V_{IL,EXTAL}$ | — | — | 0.25* $V_{DDPLL}$ | V |
| | T | EXTAL Pin Input Low Voltage[4] | $V_{IL,EXTAL}$ | $V_{SSPLL}$-0.3 | — | — | V |
| 15 | C | EXTAL Pin Input Hysteresis[4] | $V_{HYS,EXTAL}$ | — | 250 | — | mV |

1. Depending on the crystal a damping series resistor might be necessary
2. $f_{osc}$ = 4MHz, C = 22pF.
3. Maximum value is for extreme cases using high Q, low frequency crystals
4. Only valid if Pierce Oscillator/external clock selected ($\overline{XCLKS}$ = 0 during reset)

## A.4.3 Phase Locked Loop

The oscillator provides the reference clock for the PLL. The PLL´s Voltage Controlled Oscillator (VCO) is also the system clock source in self clock mode.

### A.4.3.1 XFC Component Selection

This section describes the selection of the XFC components to achieve a good filter characteristics.

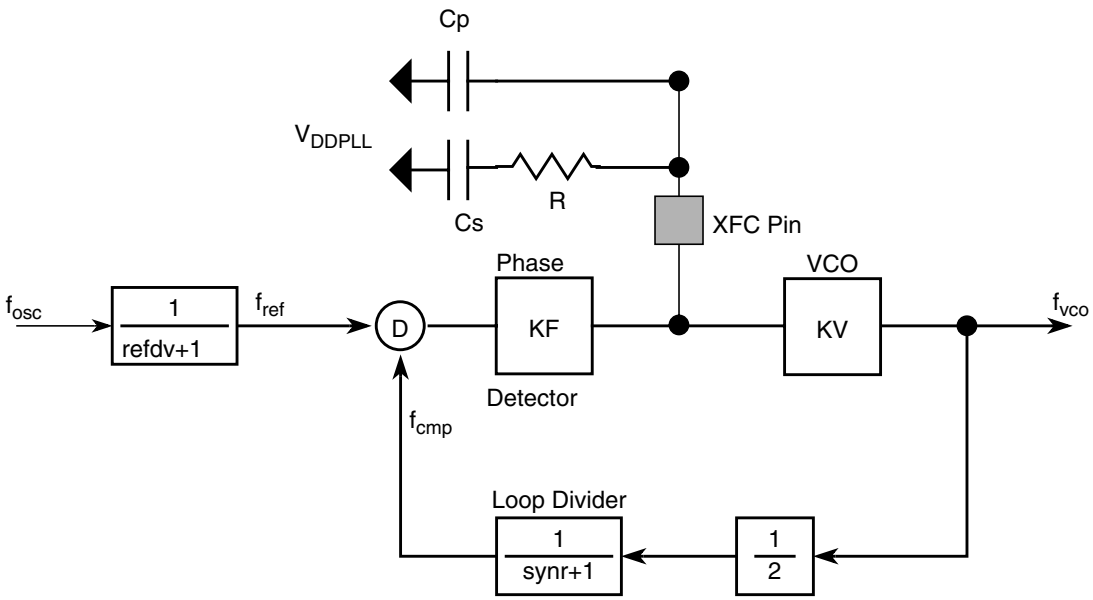


**Figure A-2. Basic PLL Functional Diagram**

The following procedure can be used to calculate the resistance and capacitance values using typical values for $K_1$, $f_1$ and $i_{ch}$ from Table A-17.

The grey boxes show the calculation for $f_{VCO}$ = 50MHz and $f_{ref}$ = 1MHz. E.g., these frequencies are used for $f_{OSC}$ = 4MHz and a 25MHz bus clock.

The VCO Gain at the desired VCO frequency is approximated by:

$$K_V = K_1 \cdot e^{\frac{(f_1 - f_{vco})}{K_1 \cdot 1V}} = -100 \cdot e^{\frac{(60-50)}{-100}} = -90.48\text{MHz/V}$$

The phase detector relationship is given by:

$$K_\Phi = -|i_{ch}| \cdot K_V \qquad = 316.7\text{Hz}/\Omega$$

$i_{ch}$ is the current in tracking mode.

The loop bandwidth $f_C$ should be chosen to fulfill the Gardner's stability criteria by at least a factor of 10, typical values are 50. $\zeta = 0.9$ ensures a good transient response.

$$f_C < \frac{2 \cdot \zeta \cdot f_{ref}}{\pi \cdot \left(\zeta + \sqrt{1 + \zeta^2}\right)} \cdot \frac{1}{10} \rightarrow f_C < \frac{f_{ref}}{4 \cdot 10};(\zeta = 0.9) \quad f_C < 25\text{kHz}$$

And finally the frequency relationship is defined as

$$n = \frac{f_{VCO}}{f_{ref}} = 2 \cdot (\text{synr} + 1) \quad = 50$$

With the above values the resistance can be calculated. The example is shown for a loop bandwidth $f_C$=10kHz:

$$R = \frac{2 \cdot \pi \cdot n \cdot f_C}{K_\Phi} \quad = 2*\pi*50*10\text{kHz}/(316.7\text{Hz}/\Omega)=9.9\text{k}\Omega=\sim 10\text{k}\Omega$$

The capacitance $C_s$ can now be calculated as:

$$C_s = \frac{2 \cdot \zeta^2}{\pi \cdot f_C \cdot R} \approx \frac{0.516}{f_C \cdot R};(\zeta = 0.9) \quad = 5.19\text{nF} =\sim 4.7\text{nF}$$

The capacitance $C_p$ should be chosen in the range of:

$$C_s/20 \leq C_p \leq C_s/10 \quad C_p = 470\text{pF}$$

### A.4.3.2 Jitter Information

The basic functionality of the PLL is shown in Figure A-3. With each transition of the clock $f_{cmp}$, the deviation from the reference clock $f_{ref}$ is measured and input voltage to the VCO is adjusted accordingly. The adjustment is done continuously with no abrupt changes in the clock output frequency. Noise, voltage, temperature and other factors cause slight variations in the control loop resulting in a clock jitter. This jitter affects the real minimum and maximum clock periods as illustrated in Figure A-4.

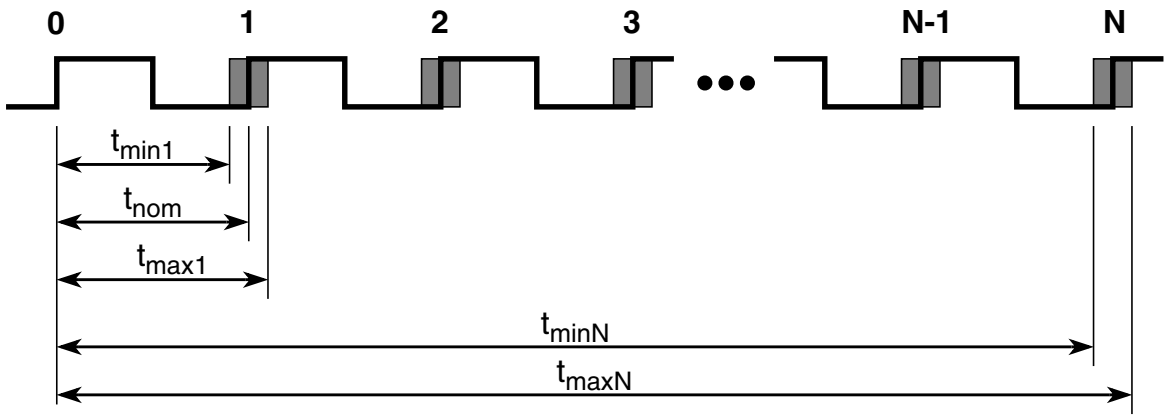


**Figure A-3. Jitter Definitions**

The relative deviation of $t_{nom}$ is at its maximum for one clock period, and decreases towards zero for larger number of clock periods (N).

Defining the jitter as:

$$J(N) = \max\left(\left|1 - \frac{t_{max}(N)}{N \cdot t_{nom}}\right|, \left|1 - \frac{t_{min}(N)}{N \cdot t_{nom}}\right|\right)$$

For N < 100, the following equation is a good fit for the maximum jitter:

$$J(N) = \frac{j_1}{\sqrt{N}} + j_2$$

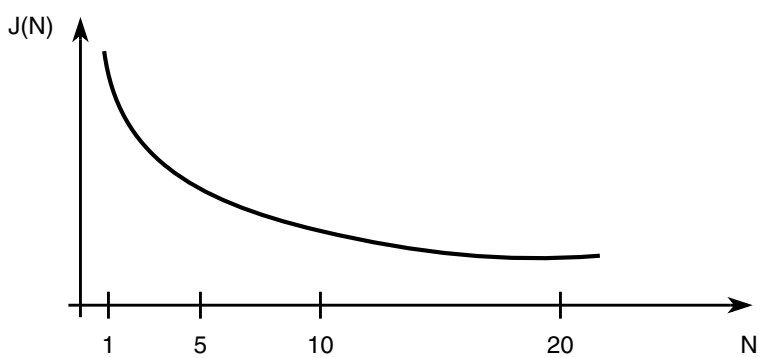


**Figure A-4. Maximum Bus Clock Jitter Approximation**

This is very important to notice with respect to timers, serial modules where a pre-scaler will eliminate the effect of the jitter to a large extent.

**Table A-17. PLL Characteristics**

| Conditions are shown in Table A-4 unless otherwise noted | | | | | | | |
|---|---|---|---|---|---|---|---|
| **Num** | **C** | **Rating** | **Symbol** | **Min** | **Typ** | **Max** | **Unit** |
| 1 | P | Self Clock Mode frequency | $f_{SCM}$ | 1 | — | 5.5 | MHz |
| 2 | D | VCO locking range | $f_{VCO}$ | 8 | — | 50 | MHz |
| 3 | D | Lock Detector transition from Acquisition to Tracking mode | $\|\Delta_{trk}\|$ | 3 | — | 4 | %(1) |
| 4 | D | Lock Detection | $\|\Delta_{Lock}\|$ | 0 | — | 1.5 | %[1] |
| 5 | D | Un-Lock Detection | $\|\Delta_{unl}\|$ | 0.5 | — | 2.5 | %[1] |
| 6 | D | Lock Detector transition from Tracking to Acquisition mode | $\|\Delta_{untl}\|$ | 6 | — | 8 | %[1] |
| 7 | C | PLLON Total Stabilization delay (Auto Mode) (2) | $t_{stab}$ | — | 0.5 | — | ms |
| 8 | D | PLLON $_{Acquisition}$ mode stabilization delay [2] | $t_{acq}$ | — | 0.3 | — | ms |
| 9 | D | PLLON Tracking mode stabilization delay [2] | $t_{al}$ | — | 0.2 | — | ms |
| 10 | D | Fitting parameter VCO loop gain | $K_1$ | — | -100 | — | MHz/V |
| 11 | D | Fitting parameter VCO loop frequency | $f_1$ | — | 60 | — | MHz |
| 12 | D | Charge pump current acquisition mode | $\| i_{ch} \|$ | — | 38.5 | — | µA |
| 13 | D | Charge pump current tracking mode | $\| i_{ch} \|$ | — | 3.5 | — | µA |
| 14 | C | Jitter fit parameter 1[2] | $j_1$ | — | — | 1.1 | % |
| 15 | C | Jitter fit parameter 2[2] | $j_2$ | — | — | 0.13 | % |

1. % deviation from target frequency
2. $f_{OSC}$ = 4MHz, $f_{BUS}$ = 25MHz equivalent $f_{VCO}$ = 50MHz: REFDV = #$03, SYNR = #$018, Cs = 4.7nF, Cp = 470pF, Rs = 10KΩ.

## A.5 NVM, Flash, and EEPROM

### A.5.1 NVM Timing

The time base for all NVM program or erase operations is derived from the oscillator. A minimum oscillator frequency $f_{NVMOSC}$ is required for performing program or erase operations. The NVM modules do not have any means to monitor the frequency and will not prevent program or erase operation at frequencies above or below the specified minimum. Attempting to program or erase the NVM modules at a lower frequency a full program or erase transition is not assured.

The Flash program and erase operations are timed using a clock derived from the oscillator using the FCLKDIV and ECLKDIV registers respectively. The frequency of this clock must be set within the limits specified as $f_{NVMOP}$.

The minimum program and erase times shown in Table A-18 are calculated for maximum $f_{NVMOP}$ and maximum $f_{bus}$. The maximum times are calculated for minimum $f_{NVMOP}$ and a $f_{bus}$ of 2MHz.

#### A.5.1.1 Single Word Programming

The programming time for single word programming is dependant on the bus frequency as a well as on the frequency $f_{NVMOP}$ and can be calculated according to the following formula.

$$t_{swpgm} = 9 \cdot \frac{1}{f_{NVMOP}} + 25 \cdot \frac{1}{f_{bus}}$$

#### A.5.1.2 Row Programming

Generally the time to program a consecutive word can be calculated as:

$$t_{bwpgm} = 4 \cdot \frac{1}{f_{NVMOP}} + 9 \cdot \frac{1}{f_{bus}}$$

For the C16, GC16, C32 and GC32 device flash arrays, where up to 32 words in a row can be programmed consecutively by keeping the command pipeline filled, the time to program a whole row is:

$$t_{brpgm} = t_{swpgm} + 31 \cdot t_{bwpgm}$$

For the C64, GC64, C96, C128 and GC128 device flash arrays, where up to 64 words in a row can be programmed consecutively by keeping the command pipeline filled, the time to program a whole row is:

$$t_{brpgm} = t_{swpgm} + 63 \cdot t_{bwpgm}$$

Row programming is more than 2 times faster than single word programming.

#### A.5.1.3 Sector Erase

Erasing either a 512 byte or 1024 byte Flash sector takes:

$$t_{era} \approx 4000 \cdot \frac{1}{f_{NVMOP}}$$

The setup times can be ignored for this operation.

#### A.5.1.4 Mass Erase

Erasing a NVM block takes:

$$t_{mass} \approx 20000 \cdot \frac{1}{f_{NVMOP}}$$

This is independent of sector size.

The setup times can be ignored for this operation.

**Table A-18. NVM Timing Characteristics**

| Conditions are shown in Table A-4 unless otherwise noted | | | | | | | |
|---|---|---|---|---|---|---|---|
| **Num** | **C** | **Rating** | **Symbol** | **Min** | **Typ** | **Max** | **Unit** |
| 1 | D | External Oscillator Clock | $f_{NVMOSC}$ | 0.5 | — | 50[1] | MHz |
| 2 | D | Bus frequency for Programming or Erase Operations | $f_{NVMBUS}$ | 1 | — | | MHz |
| 3 | D | Operating Frequency | $f_{NVMOP}$ | 150 | — | 200 | kHz |
| 4 | P | Single Word Programming Time | $t_{swpgm}$ | 46[2] | — | 74.5[3] | µs |
| 5 | D | Flash Burst Programming consecutive word | $t_{bwpgm}$ | 20.4[2] | — | 31[3] | µs |
| 6 | D | Flash Burst Programming Time for 32 Word row | $t_{brpgm}$ | 678.4[2] | — | 1035.5[3] | µs |
| 6 | D | Flash Burst Programming Time for 64 Word row | $t_{brpgm}$ | 1331.2[2] | — | 2027.5[3] | µs |
| 7 | P | Sector Erase Time | $t_{era}$ | 20[4] | — | 26.7[3] | ms |
| 8 | P | Mass Erase Time | $t_{mass}$ | 100[4] | — | 133[3] | ms |
| 9 | D | Blank Check Time Flash per block | $t_{check}$ | 11[5] | — | 32778[6] | [7]$t_{cyc}$ |
| 9 | D | Blank Check Time Flash per block | $t_{check}$ | 11[8] | — | 65546[9] | [7]$t_{cyc}$ |

1. Restrictions for oscillator in crystal mode apply!
2. Minimum Programming times are achieved under maximum NVM operating frequency $f_{NVMOP}$ and maximum bus frequency $f_{bus}$.
3. Maximum Erase and Programming times are achieved under particular combinations of $f_{NVMOP}$ and bus frequency f bus. Refer to formulae in Sections A.3.1.1 - A.3.1.4 for guidance.
4. Minimum Erase times are achieved under maximum NVM operating frequency $f_{NVMOP}$
5. Minimum time, if first word in the array is not blank (512 byte sector size).
6. Maximum time to complete check on an erased block (512 byte sector size)
7. Where $t_{cyc}$ is the system bus clock period.
8. Minimum time, if first word in the array is not blank (1024 byte sector size)
9. Maximum time to complete check on an erased block (1024 byte sector size).

## A.5.2 NVM Reliability

The reliability of the NVM blocks is guaranteed by stress test during qualification, constant process monitors and burn-in to screen early life failures. The program/erase cycle count on the sector is incremented every time a sector or mass erase event is executed.

**Table A-19. NVM Reliability Characteristics[1]**

| Conditions are shown in Table A-4. unless otherwise noted | | | | | | | |
|---|---|---|---|---|---|---|---|
| **Num** | **C** | **Rating** | **Symbol** | **Min** | **Typ** | **Max** | **Unit** |
| **Flash Reliability Characteristics** | | | | | | | |
| 1 | C | Data retention after 10,000 program/erase cycles at an average junction temperature of $T_{Javg} \leq 85°C$ | $t_{FLRET}$ | 15 | 100[2] | — | Years |
| 2 | C | Data retention with <100 program/erase cycles at an average junction temperature $T_{Javg} \leq 85°C$ | | 20 | 100[2] | — | |
| 3 | C | Number of program/erase cycles ($-40°C \leq T_J \leq 0°C$) | $n_{FL}$ | 10,000 | — | — | Cycles |
| 4 | C | Number of program/erase cycles ($0°C \leq T_J \leq 140°C$) | | 10,000 | 100,000[3] | — | |

1. $T_{Javg}$ will not exeed 85°C considering a typical temperature profile over the lifetime of a consumer, industrial or automotive application.
2. Typical data retention values are based on intrinsic capability of the technology measured at high temperature and de-rated to 25°C using the Arrhenius equation. For additional information on how Freescale defines Typical Data Retention, please refer to Engineering Bulletin EB618.
3. Spec table quotes typical endurance evaluated at 25°C for this product family, typical endurance at various temperature can be estimated using the graph below. For additional information on how Freescale defines Typical Endurance, please refer to Engineering Bulletin EB619.

**Figure A-5. Typical Endurance vs Temperature**

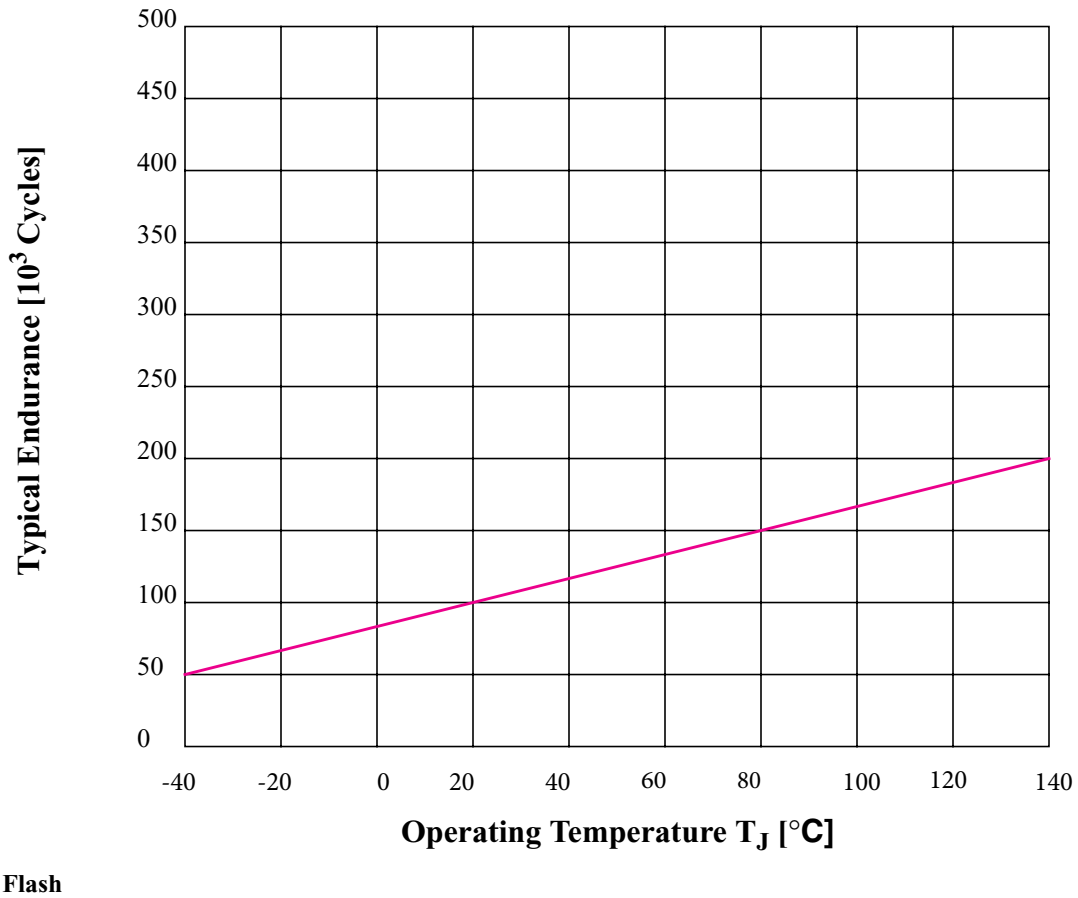


## A.6 SPI

This section provides electrical parametrics and ratings for the SPI.

In Table A-20 the measurement conditions are listed.

**Table A-20. Measurement Conditions**

| Description | Value | Unit |
|---|---|---|
| Drive mode | Full drive mode | — |
| Load capacitance $C_{LOAD,}$ on all outputs | 50 | pF |
| Thresholds for delay measurement points | (20% / 80%) $V_{DDX}$ | V |

### A.6.1 Master Mode

In Figure A-6 the timing diagram for master mode with transmission format CPHA=0 is depicted.

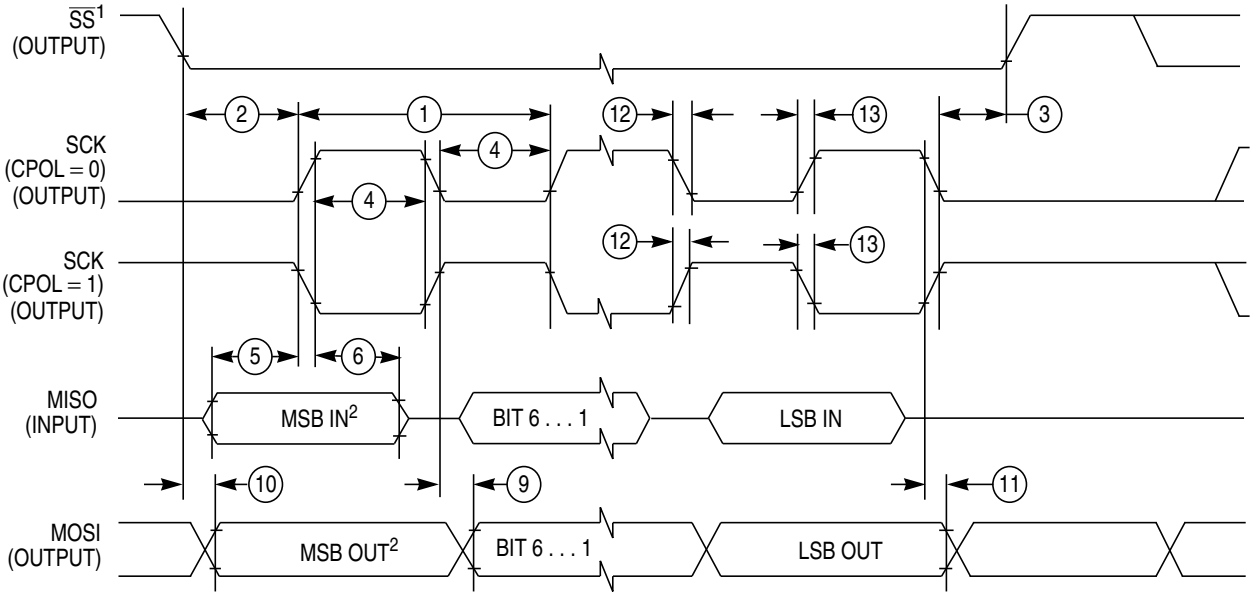


1. If configured as an output.
2. LSBF = 0. For LSBF = 1, bit order is LSB, bit 1, ..., bit 6, MSB.

**Figure A-6. SPI Master Timing (CPHA=0)**

In Figure A-7 the timing diagram for master mode with transmission format CPHA=1 is depicted.

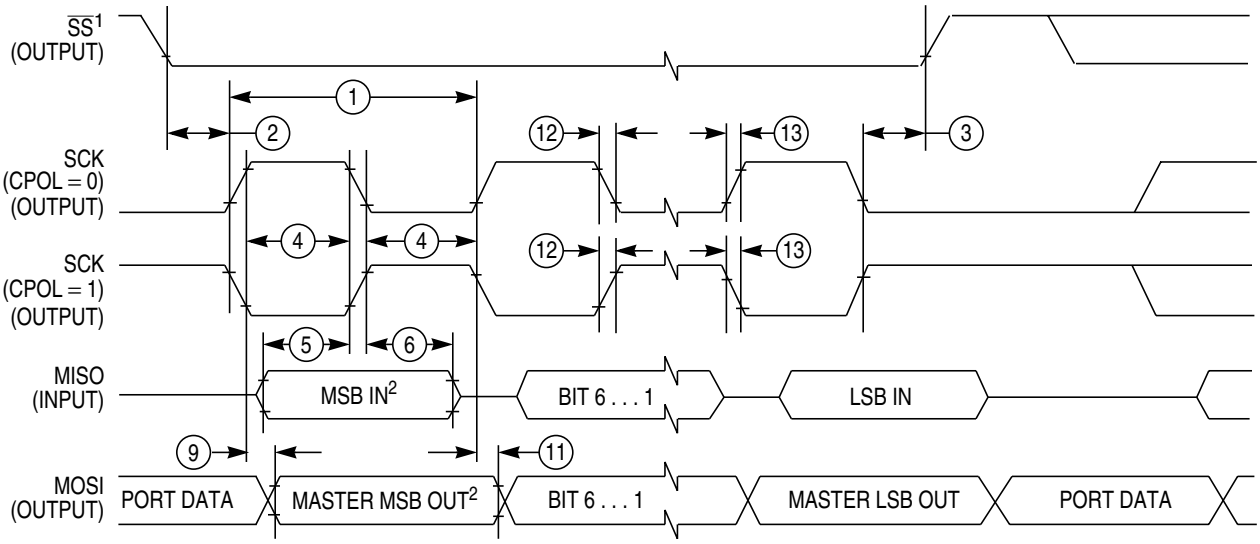


1. If configured as output
2. LSBF = 0. For LSBF = 1, bit order is LSB, bit 1, ..., bit 6, MSB.

**Figure A-7. SPI Master Timing (CPHA=1)**

In Table A-21 the timing characteristics for master mode are listed.

**Table A-21. SPI Master Mode Timing Characteristics**

| Num | C | Characteristic | Symbol | Min | Typ | Max | Unit |
|---|---|---|---|---|---|---|---|
| 1 | P | SCK Frequency | $f_{sck}$ | 1/2048 | — | 1/2 | $f_{bus}$ |
| 1 | P | SCK Period | $t_{sck}$ | 2 | — | 2048 | $t_{bus}$ |
| 2 | D | Enable Lead Time | $t_{lead}$ | — | 1/2 | — | $t_{sck}$ |
| 3 | D | Enable Lag Time | $t_{lag}$ | — | 1/2 | — | $t_{sck}$ |
| 4 | D | Clock (SCK) High or Low Time | $t_{wsck}$ | — | 1/2 | — | $t_{sck}$ |
| 5 | D | Data Setup Time (Inputs) | $t_{su}$ | 8 | — | — | ns |
| 6 | D | Data Hold Time (Inputs) | $t_{hi}$ | 8 | — | — | ns |
| 9 | D | Data Valid after SCK Edge | $t_{vsck}$ | — | — | 30 | ns |
| 10 | D | Data Valid after $\overline{SS}$ fall (CPHA=0) | $t_{vss}$ | — | — | 15 | ns |
| 11 | D | Data Hold Time (Outputs) | $t_{ho}$ | 20 | — | — | ns |
| 12 | D | Rise and Fall Time Inputs | $t_{rfi}$ | — | — | 8 | ns |
| 13 | D | Rise and Fall Time Outputs | $t_{rfo}$ | — | — | 8 | ns |

## A.6.2 Slave Mode

In Figure A-8 the timing diagram for slave mode with transmission format CPHA=0 is depicted.

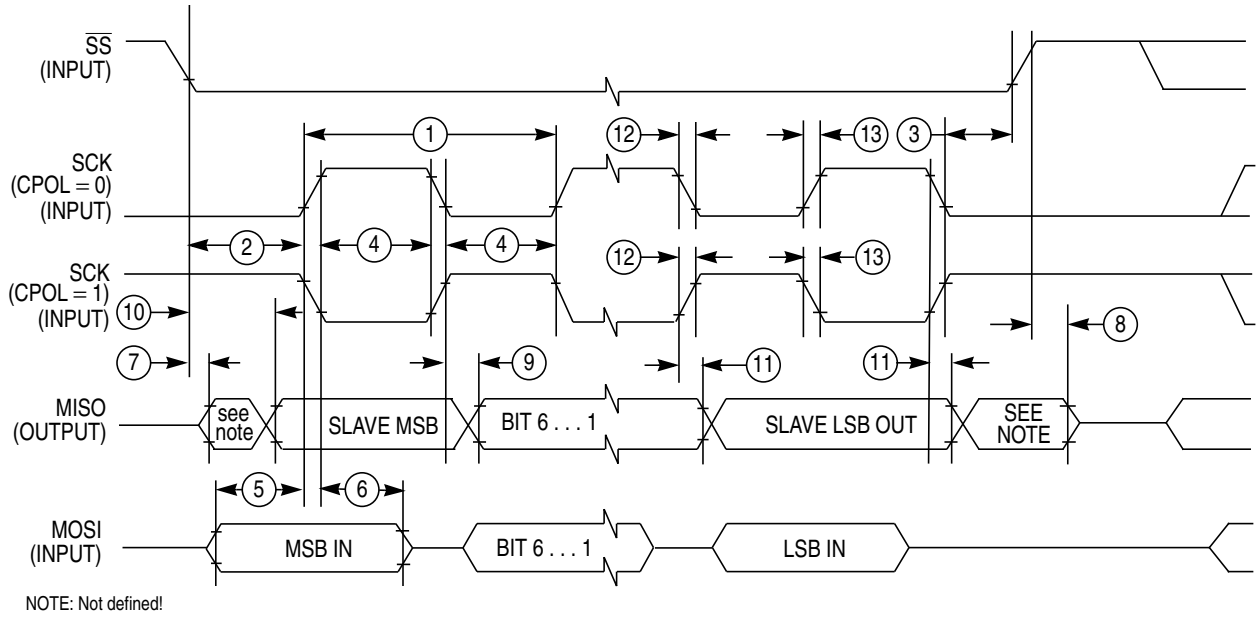


**Figure A-8. SPI Slave Timing (CPHA=0)**

In Figure A-9 the timing diagram for slave mode with transmission format CPHA=1 is depicted.

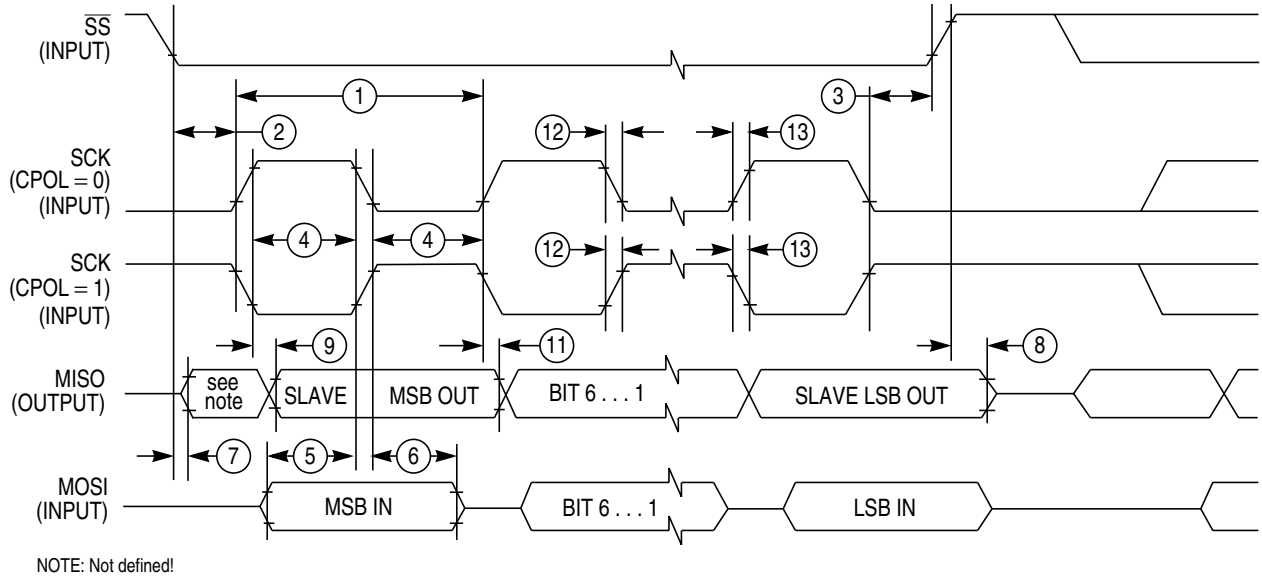


**Figure A-9. SPI Slave Timing (CPHA=1)**

In Table A-22 the timing characteristics for slave mode are listed.

**Table A-22. SPI Slave Mode Timing Characteristics**

| Num | C | Characteristic | Symbol | Min | Typ | Max | Unit |
|---|---|---|---|---|---|---|---|
| 1 | D | SCK Frequency | $f_{sck}$ | DC | — | 1/4 | $f_{bus}$ |
| 1 | P | SCK Period | $t_{sck}$ | 4 | — | ∞ | $t_{bus}$ |
| 2 | D | Enable Lead Time | $t_{lead}$ | 4 | — | — | $t_{bus}$ |
| 3 | D | Enable Lag Time | $t_{lag}$ | 4 | — | — | $t_{bus}$ |
| 4 | D | Clock (SCK) High or Low Time | $t_{wsck}$ | 4 | — | — | $t_{bus}$ |
| 5 | D | Data Setup Time (Inputs) | $t_{su}$ | 8 | — | — | ns |
| 6 | D | Data Hold Time (Inputs) | $t_{hi}$ | 8 | — | — | ns |
| 7 | D | Slave Access Time (time to data active) | $t_a$ | — | — | 20 | ns |
| 8 | D | Slave MISO Disable Time | $t_{dis}$ | — | — | 22 | ns |
| 9 | D | Data Valid after SCK Edge | $t_{vsck}$ | — | — | 30 + $t_{bus}$ (1) | ns |
| 10 | D | Data Valid after $\overline{SS}$ fall | $t_{vss}$ | — | — | 30 + $t_{bus}$[1] | ns |
| 11 | D | Data Hold Time (Outputs) | $t_{ho}$ | 20 | — | — | ns |
| 12 | D | Rise and Fall Time Inputs | $t_{rfi}$ | — | — | 8 | ns |
| 13 | D | Rise and Fall Time Outputs | $t_{rfo}$ | — | — | 8 | ns |

1. $t_{bus}$ added due to internal synchronization delay

# A.7 Voltage Regulator

## A.7.1 Voltage Regulator Operating Conditions

**Table A-23. Voltage Regulator Electrical Parameters**

| Num | C | Characteristic | Symbol | Min | Typ | Max | Unit |
|---|---|---|---|---|---|---|---|
| 1 | P | Input Voltages | $V_{VDDR, A}$ | 2.97 | — | 5.5 | V |
| 3 | P | Output Voltage Core<br>Full Performance Mode | $V_{DD}$ | 2.35 | 2.5 | 2.75 | V |
| 4 | P | Low Voltage Interrupt[1]<br>Assert Level (xL45J mask set)<br>Assert Level (other mask sets)<br>Deassert Level (xL45J mask set)<br>Deassert Level (other mask sets) | <br>$V_{LVIA}$<br>$V_{LVIA}$<br>$V_{LVID}$<br>$V_{LVID}$ | <br>4.30<br>4.00<br>4.42<br>4.15 | <br>4.53<br>4.37<br>4.65<br>4.52 | <br>4.77<br>4.66<br>4.89<br>4.77 | <br>V<br>V<br>V<br>V |
| 5 | P | Low Voltage Reset[2],[3]<br>Assert Level (xL45J mask set)<br>Assert Level (other mask sets) | $V_{LVRA}$ | <br>2.25<br>2.25 | <br>2.3<br>2.35 | <br>—<br>— | V |
| 7 | C | Power-on Reset[4]<br>Assert Level<br>Deassert Level | <br>$V_{PORA}$<br>$V_{PORD}$ | <br>0.97<br>— | <br>—<br>— | <br>—<br>2.05 | <br>V<br>V |

1. Monitors $V_{DDA}$, active only in Full Performance Mode. Indicates I/O & ADC performance degradation due to low supply voltage.
2. Monitors $V_{DD}$, active only in Full Performance Mode. MCU is monitored by the POR in RPM (see Figure A-10)
3. Digital functionality is guaranteed in the range between $V_{DD}$(min) and $V_{LVRA}$(min).
4. Monitors $V_{DD}$. Active in all modes.

## A.7.2 Chip Power-up and LVI/LVR Graphical Explanation

Voltage regulator sub modules LVI (low voltage interrupt), POR (power-on reset) and LVR (low voltage reset) handle chip power-up or drops of the supply voltage. Their function is described in Figure A-10.

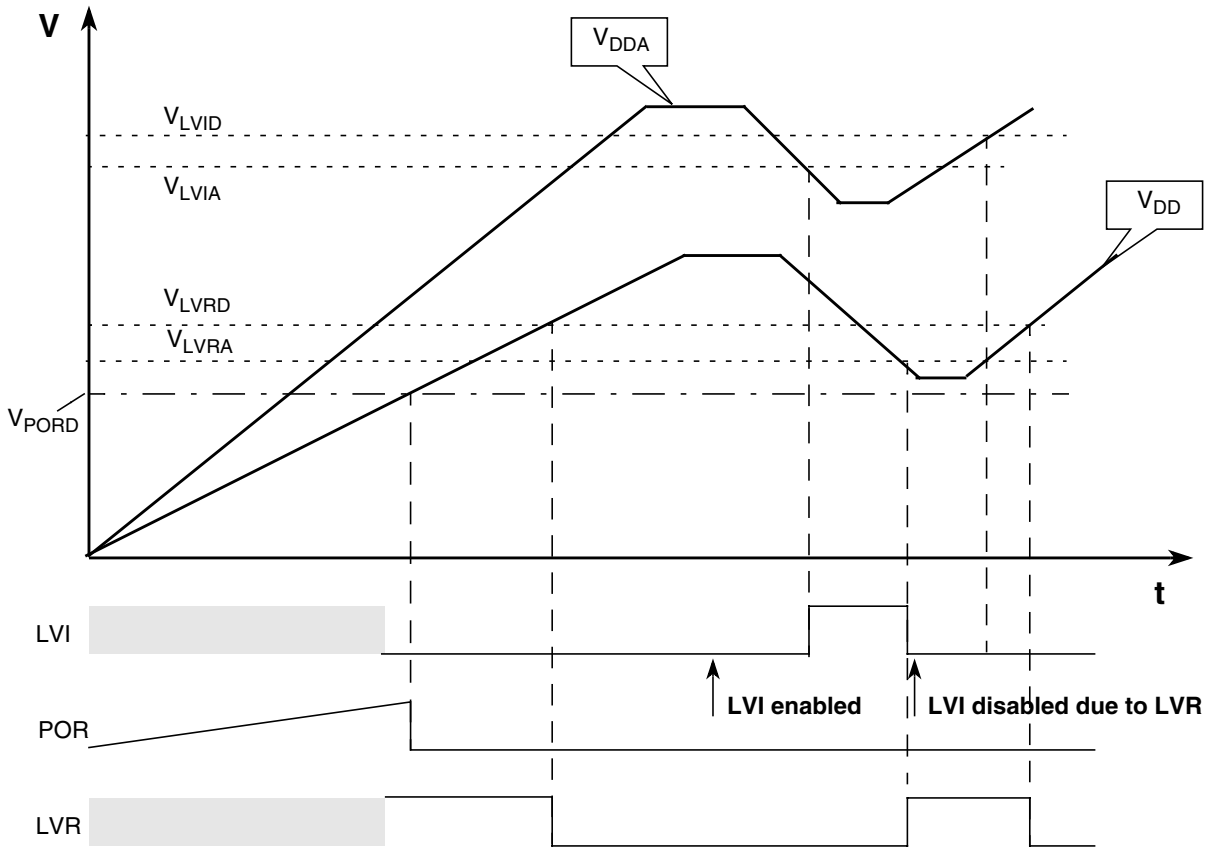


**Figure A-10. Voltage Regulator — Chip Power-up and Voltage Drops (not scaled)**

## A.7.3 Output Loads

### A.7.3.1 Resistive Loads

The on-chip voltage regulator is intended to supply the internal logic and oscillator circuits allows no external DC loads.

### A.7.3.2 Capacitive Loads

The capacitive loads are specified in Table A-24. Ceramic capacitors with X7R dielectricum are required.

**Table A-24. Voltage Regulator — Capacitive Loads**

| Num | Characteristic | Symbol | Min | Typical | Max | Unit |
|---|---|---|---|---|---|---|
| 1 | $V_{DD}$ external capacitive load | $C_{DDext}$ | 400 | 440 | 12000 | nF |
| 2 | $V_{DDPLL}$ external capacitive load | $C_{DDPLLext}$ | 90 | 220 | 5000 | nF |

# Appendix B
# Emulation Information

## B.1 General

For emulation, external addressing of a 128K memory map is required. This is provided in a 112 LQFP package version of the MC9S12C128 which includes the 3 necessary extra external address bus signals via Port K. This package version is for emulation only and not provided as a general production package.

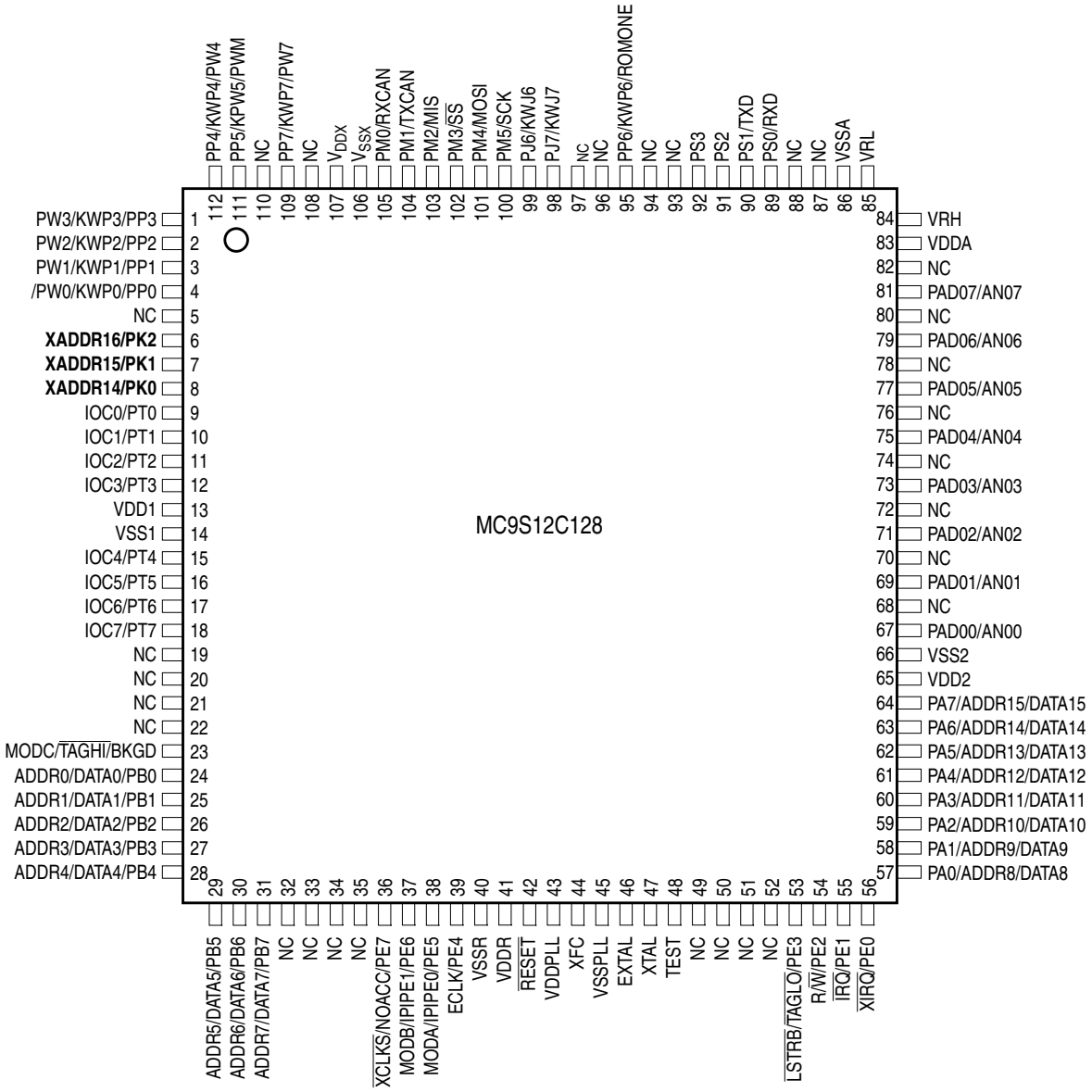


Signals shown in **Bold** are available only in the 112 Pin Package. Pins marked "NC" are not connected

**Figure B-1. Pin Assignments in 112-Pin LQFP**

### B.1.1 PK[2:0] / XADDR[16:14]

PK2-PK0 provide the expanded address XADDR[16:14] for the external bus.

Refer to the S12 Core user guide for detailed information about external address page access.

| Pin Name Function 1 | Pin Name Function 2 | Power Domain | Internal Pull Resistor | | Description |
|---|---|---|---|---|---|
| | | | CTRL | Reset State | |
| PK[2:0] | XADDR[16:14] | $V_{DDX}$ | PUPKE | Up | Port K I/O Pins |

The reset state of DDRK in the S12_CORE is $00, configuring the pins as inputs.

The reset state of PUPKE in the PUCR register of the S12_CORE is "1" enabling the internal pullup resistors at PortK[2:0].

In this reset state the pull-up resistors provide a defined state and prevent a floating input, thereby preventing unnecessary current consumption at the input stage.

# Appendix C
# Package Information

## C.1 General

This section provides the physical dimensions of the packages 48LQFP, 52LQFP, 80QFP.

## C.1.1 80-Pin QFP Package

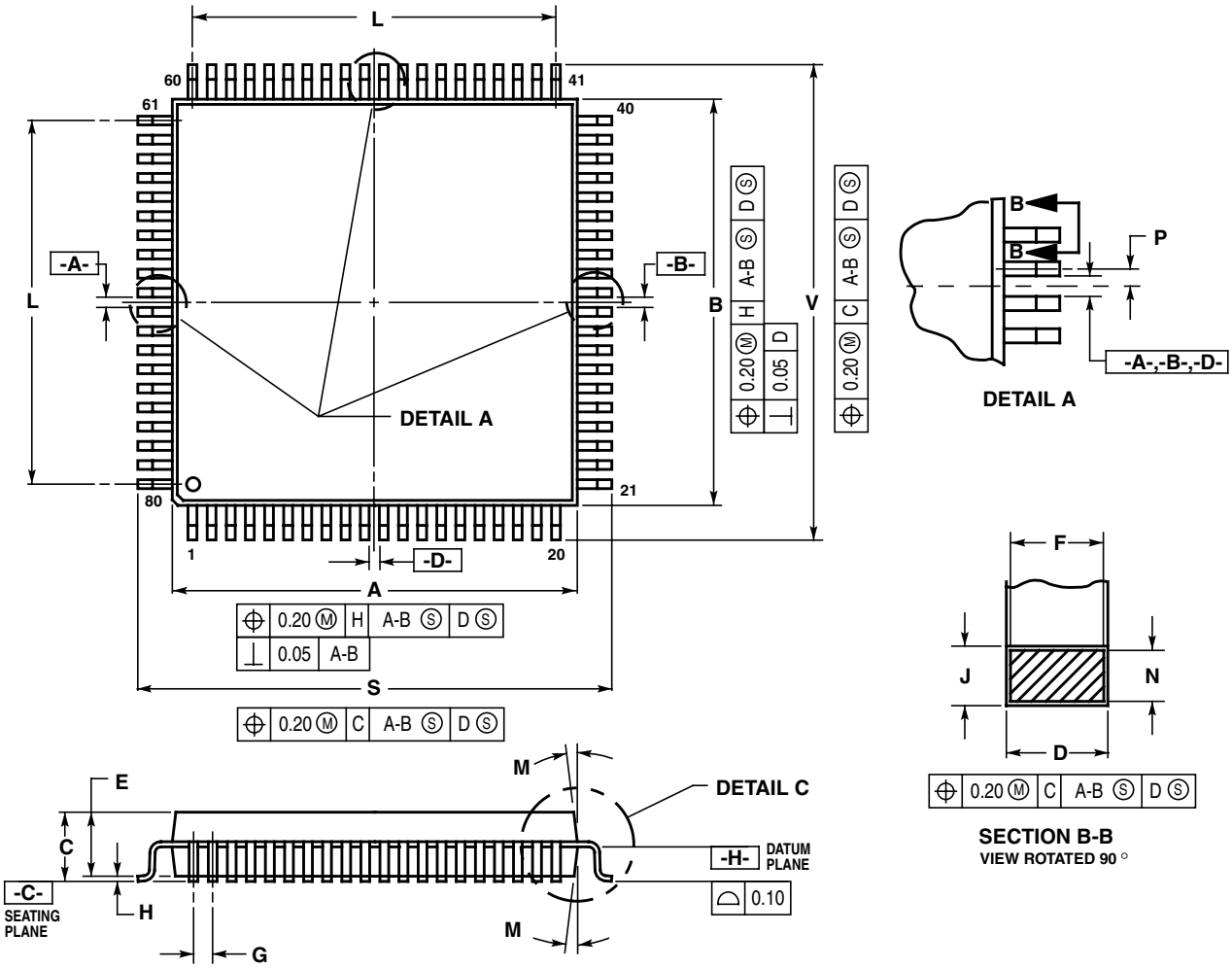


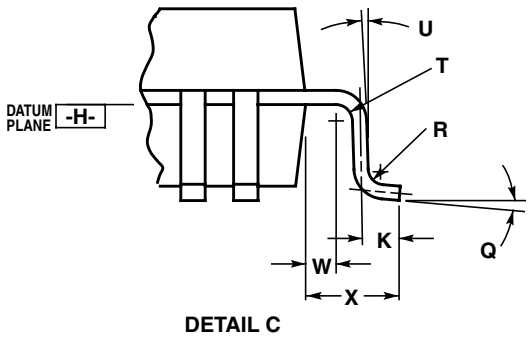


NOTES:
1. DIMENSIONING AND TOLERANCING PER ANSI Y14.5M, 1982.
2. CONTROLLING DIMENSION: MILLIMETER.
3. DATUM PLANE -H- IS LOCATED AT BOTTOM OF LEAD AND IS COINCIDENT WITH THE LEAD WHERE THE LEAD EXITS THE PLASTIC BODY AT THE BOTTOM OF THE PARTING LINE.
4. DATUMS -A-, -B- AND -D- TO BE DETERMINED AT DATUM PLANE -H-.
5. DIMENSIONS S AND V TO BE DETERMINED AT SEATING PLANE -C-.
6. DIMENSIONS A AND B DO NOT INCLUDE MOLD PROTRUSION. ALLOWABLE PROTRUSION IS 0.25 PER SIDE. DIMENSIONS A AND B DO INCLUDE MOLD MISMATCH AND ARE DETERMINED AT DATUM PLANE -H-.
7. DIMENSION D DOES NOT INCLUDE DAMBAR PROTRUSION. ALLOWABLE DAMBAR PROTRUSION SHALL BE 0.08 TOTAL IN EXCESS OF THE D DIMENSION AT MAXIMUM MATERIAL CONDITION. DAMBAR CANNOT BE LOCATED ON THE LOWER RADIUS OR THE FOOT.

| | MILLIMETERS | |
|---|---|---|
| DIM | MIN | MAX |
| A | 13.90 | 14.10 |
| B | 13.90 | 14.10 |
| C | 2.15 | 2.45 |
| D | 0.22 | 0.38 |
| E | 2.00 | 2.40 |
| F | 0.22 | 0.33 |
| G | 0.65 BSC | |
| H | --- | 0.25 |
| J | 0.13 | 0.23 |
| K | 0.65 | 0.95 |
| L | 12.35 REF | |
| M | 5° | 10° |
| N | 0.13 | 0.17 |
| P | 0.325 BSC | |
| Q | 0° | 7° |
| R | 0.13 | 0.30 |
| S | 16.95 | 17.45 |
| T | 0.13 | --- |
| U | 0° | --- |
| V | 16.95 | 17.45 |
| W | 0.35 | 0.45 |
| X | 1.6 REF | |

**Figure C-1. 80-Pin QFP Mechanical Dimensions (Case no. 841B)**

## C.1.2 52-Pin LQFP Package

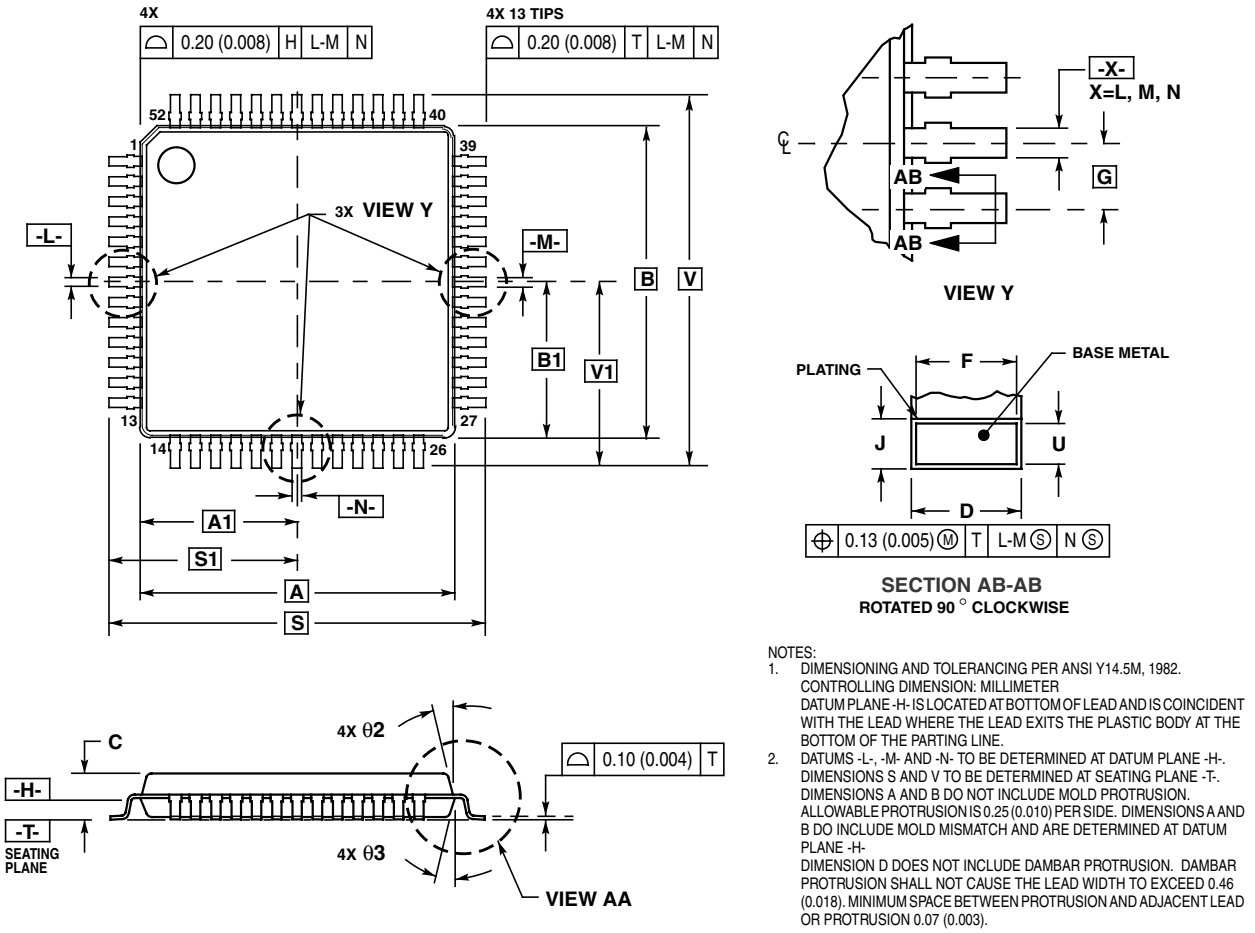


NOTES:
1. DIMENSIONING AND TOLERANCING PER ANSI Y14.5M, 1982.
   CONTROLLING DIMENSION: MILLIMETER
   DATUM PLANE -H- IS LOCATED AT BOTTOM OF LEAD AND IS COINCIDENT WITH THE LEAD WHERE THE LEAD EXITS THE PLASTIC BODY AT THE BOTTOM OF THE PARTING LINE.
2. DATUMS -L-, -M- AND -N- TO BE DETERMINED AT DATUM PLANE -H-.
   DIMENSIONS S AND V TO BE DETERMINED AT SEATING PLANE -T-.
   DIMENSIONS A AND B DO NOT INCLUDE MOLD PROTRUSION.
   ALLOWABLE PROTRUSION IS 0.25 (0.010) PER SIDE. DIMENSIONS A AND B DO INCLUDE MOLD MISMATCH AND ARE DETERMINED AT DATUM PLANE -H-
   DIMENSION D DOES NOT INCLUDE DAMBAR PROTRUSION. DAMBAR PROTRUSION SHALL NOT CAUSE THE LEAD WIDTH TO EXCEED 0.46 (0.018). MINIMUM SPACE BETWEEN PROTRUSION AND ADJACENT LEAD OR PROTRUSION 0.07 (0.003).

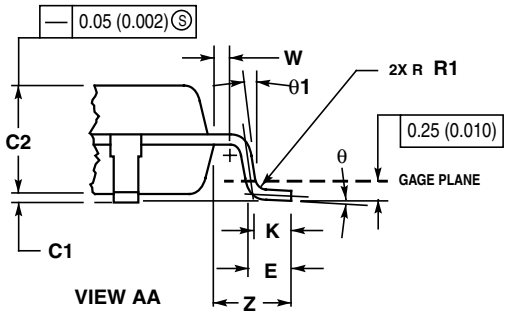


| DIM | MILLIMETERS MIN | MILLIMETERS MAX | INCHES MIN | INCHES MAX |
|---|---|---|---|---|
| A | 10.00 BSC | | 0.394 BSC | |
| A1 | 5.00 BSC | | 0.197 BSC | |
| B | 10.00 BSC | | 0.394 BSC | |
| B1 | 5.00 BSC | | 0.197 BSC | |
| C | --- | 1.70 | --- | 0.067 |
| C1 | 0.05 | 0.20 | 0.002 | 0.008 |
| C2 | 1.30 | 1.50 | 0.051 | 0.059 |
| D | 0.20 | 0.40 | 0.008 | 0.016 |
| E | 0.45 | 0.75 | 0.018 | 0.030 |
| F | 0.22 | 0.35 | 0.009 | 0.014 |
| G | 0.65 BSC | | 0.026 BSC | |
| J | 0.07 | 0.20 | 0.003 | 0.008 |
| K | 0.50 REF | | 0.020 REF | |
| R1 | 0.08 | 0.20 | 0.003 | 0.008 |
| S | 12.00 BSC | | 0.472 BSC | |
| S1 | 6.00 BSC | | 0.236 BSC | |
| U | 0.09 | 0.16 | 0.004 | 0.006 |
| V | 12.00 BSC | | 0.472 BSC | |
| V1 | 6.00 BSC | | 0.236 BSC | |
| W | 0.20 REF | | 0.008 REF | |
| Z | 1.00 REF | | 0.039 REF | |
| θ | 0° | 7° | 0° | 7° |
| θ1 | 0° | --- | 0° | --- |
| θ2 | 12° REF | | 12° REF | |
| θ3 | 12° REF | | 12° REF | |

**Figure C-2. 52-Pin LQFP Mechanical Dimensions (Case no. 848D-03)**

## C.1.3 48-Pin LQFP Package

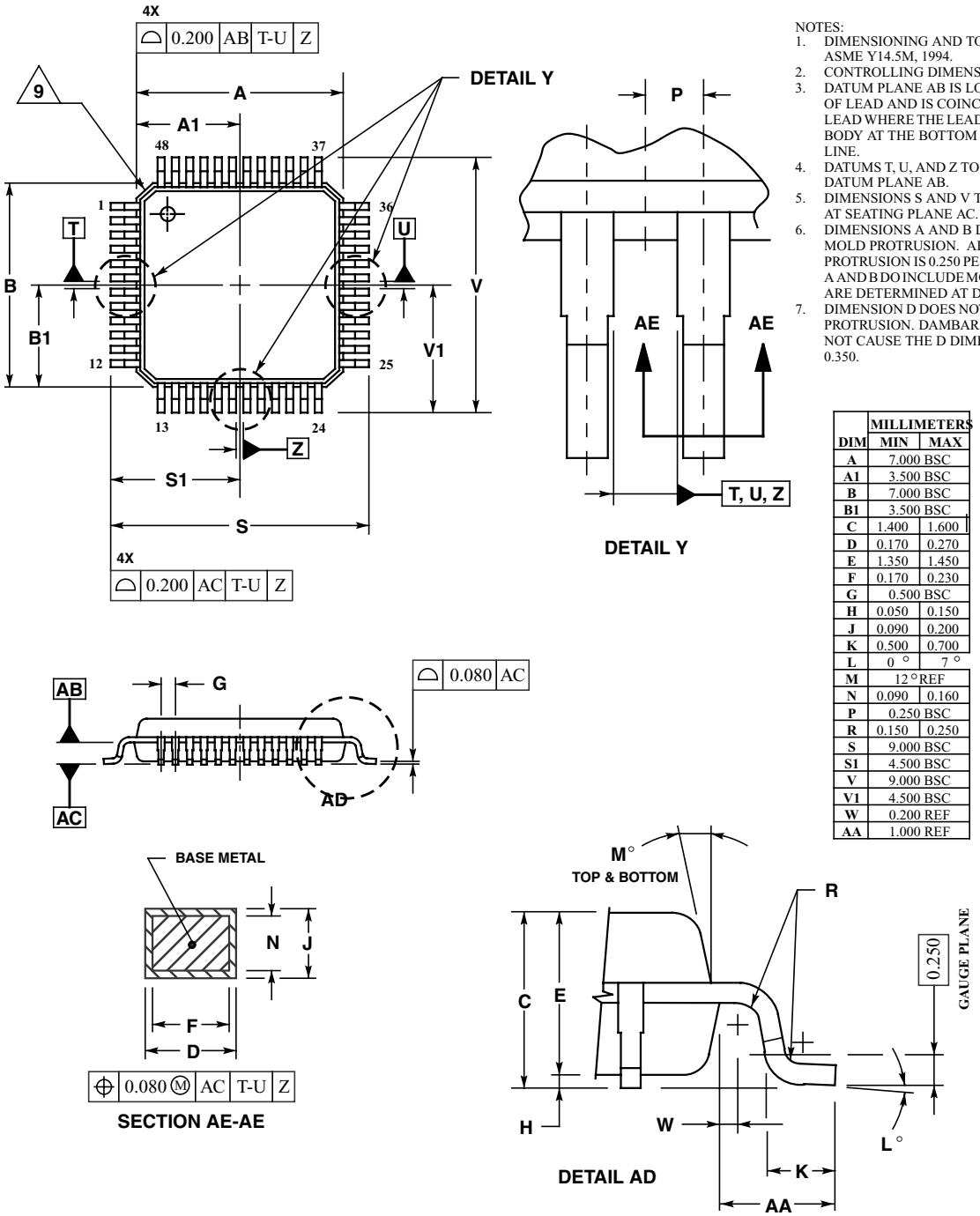


NOTES:
1. DIMENSIONING AND TOLERANCING PER ASME Y14.5M, 1994.
2. CONTROLLING DIMENSION: MILLIMETER.
3. DATUM PLANE AB IS LOCATED AT BOTTOM OF LEAD AND IS COINCIDENT WITH THE LEAD WHERE THE LEAD EXITS THE PLASTIC BODY AT THE BOTTOM OF THE PARTING LINE.
4. DATUMS T, U, AND Z TO BE DETERMINED AT DATUM PLANE AB.
5. DIMENSIONS S AND V TO BE DETERMINED AT SEATING PLANE AC.
6. DIMENSIONS A AND B DO NOT INCLUDE MOLD PROTRUSION. ALLOWABLE PROTRUSION IS 0.250 PER SIDE. DIMENSIONS A AND B DO INCLUDE MOLD MISMATCH AND ARE DETERMINED AT DATUM PLANE AB.
7. DIMENSION D DOES NOT INCLUDE DAMBAR PROTRUSION. DAMBAR PROTRUSION SHALL NOT CAUSE THE D DIMENSION TO EXCEED 0.350.

| | MILLIMETERS | |
|---|---|---|
| DIM | MIN | MAX |
| A | 7.000 BSC | |
| A1 | 3.500 BSC | |
| B | 7.000 BSC | |
| B1 | 3.500 BSC | |
| C | 1.400 | 1.600 |
| D | 0.170 | 0.270 |
| E | 1.350 | 1.450 |
| F | 0.170 | 0.230 |
| G | 0.500 BSC | |
| H | 0.050 | 0.150 |
| J | 0.090 | 0.200 |
| K | 0.500 | 0.700 |
| L | 0 ° | 7 ° |
| M | 12 ° REF | |
| N | 0.090 | 0.160 |
| P | 0.250 BSC | |
| R | 0.150 | 0.250 |
| S | 9.000 BSC | |
| S1 | 4.500 BSC | |
| V | 9.000 BSC | |
| V1 | 4.500 BSC | |
| W | 0.200 REF | |
| AA | 1.000 REF | |

**Figure C-3. 48-Pin LQFP Mechanical Dimensions (Case no. 932-03 issue F)**

# Appendix D
# Derivative Differences

The Device User Guide provides information about the MC9S12C-Family and the MC9S12GC-Family. The C-Family and the GC-Family offer an extensive range of package, temperature and speed options. The members of the GC-Family are a subset of the C-family that do not feature a CAN module.

Table D-1. shows a feature overview of the C and GC family members.

**Table D-1. List of MC9S12C and MC9S12GC Family members[1]**

| Flash | RAM | Device | CAN | SCI | SPI | A/D | PWM | Timer |
|---|---|---|---|---|---|---|---|---|
| 128K | 4K | MC9S12C128 | 1 | 1 | 1 | 8ch | 6ch | 8ch |
| | | MC9S12GC128 | — | 1 | 1 | 8ch | 6ch | 8ch |
| 96K | 4K | MC9S12C96 | 1 | 1 | 1 | 8ch | 6ch | 8ch |
| | | MC9S12GC96 | — | 1 | 1 | 8ch | 6ch | 8ch |
| 64K | 4K | MC9S12C64 | 1 | 1 | 1 | 8ch | 6ch | 8ch |
| | | MC9S12GC64 | — | 1 | 1 | 8ch | 6ch | 8ch |
| 32K | 2K | MC9S12C32 | 1 | 1 | 1 | 8ch | 6ch | 8ch |
| | | MC9S12GC32 | — | 1 | 1 | 8ch | 6ch | 8ch |
| 16K | 1K | MC9S12GC16 | — | 1 | 1 | 8ch | 6ch | 8ch |

1. All family memebers are available in 80QFP, 52LQFP and 48LQFP package options

# Appendix E
# Ordering Information

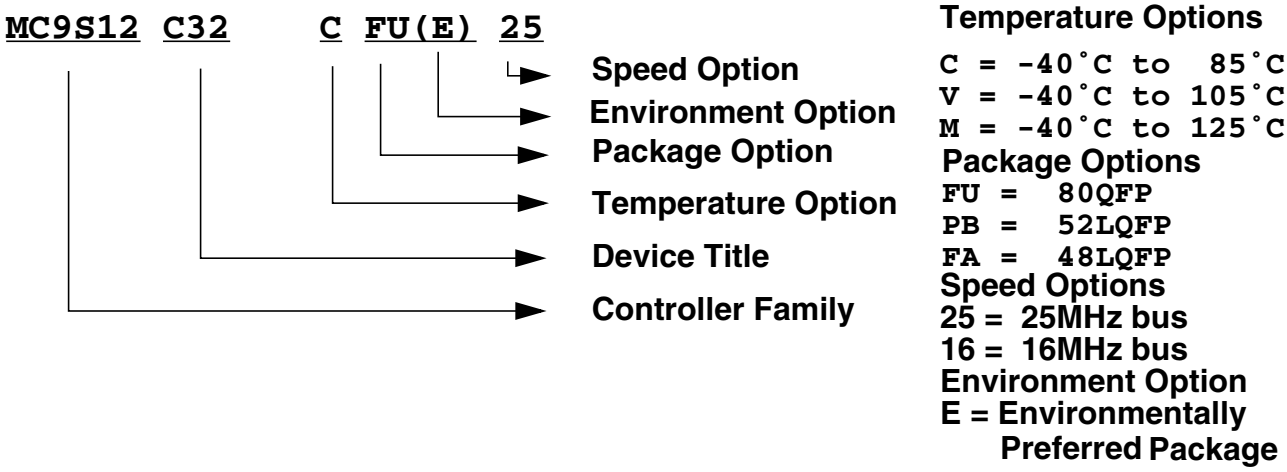


**Figure E-1. Order Part number Coding**

Table E-1. lists C-family part number coding based on package, speed and temperature and die options.

Table E-2. lists CG-family part number coding based on package, speed and temperature and die options.

**Table E-1. MC9S12C-Family / MC9S12GC-Family Part Number Coding**

| Part Number | Mask[1] set | Temp. | Package | Speed | Die Type | Flash | RAM | I/O[2], [3] |
|---|---|---|---|---|---|---|---|---|
| MC9S12C128CFA | XL09S/0M66G | -40˚C, 85˚C | 48LQFP | 25MHz | C128 die | 128K | 4K | 31 |
| MC9S12C128CPB | XL09S/0M66G | -40˚C, 85˚C | 52LQFP | 25MHz | C128 die | 128K | 4K | 35 |
| MC9S12C128CFU | XL09S/0M66G | -40˚C, 85˚C | 80QFP | 25MHz | C128 die | 128K | 4K | 60 |
| MC9S12C128VFA | XL09S/0M66G | -40˚C,105˚C | 48LQFP | 25MHz | C128 die | 128K | 4K | 31 |
| MC9S12C128VPB | XL09S/0M66G | -40˚C,105˚C | 52LQFP | 25MHz | C128 die | 128K | 4K | 35 |
| MC9S12C128VFU | XL09S/0M66G | -40˚C, 105˚C | 80QFP | 25MHz | C128 die | 128K | 4K | 60 |
| MC9S12C128MFA | XL09S/0M66G | -40˚C,125˚C | 48LQFP | 25MHz | C128 die | 128K | 4K | 31 |
| MC9S12C128MPB | XL09S/0M66G | -40˚C,125˚C | 52LQFP | 25MHz | C128 die | 128K | 4K | 35 |
| MC9S12C128MFU | XL09S/0M66G | -40˚C, 125˚C | 80QFP | 25MHz | C128 die | 128K | 4K | 60 |
| MC9S12C96CFA | XL09S/0M66G | -40˚C, 85˚C | 48LQFP | 25MHz | C128 die | 96K | 4K | 31 |
| MC9S12C96CPB | XL09S/0M66G | -40˚C, 85˚C | 52LQFP | 25MHz | C128 die | 96K | 4K | 35 |
| MC9S12C96CFU | XL09S/0M66G | -40˚C, 85˚C | 80QFP | 25MHz | C128 die | 96K | 4K | 60 |
| MC9S12C96VFA | XL09S/0M66G | -40˚C,105˚C | 48LQFP | 25MHz | C128 die | 96K | 4K | 31 |
| MC9S12C96VPB | XL09S/0M66G | -40˚C,105˚C | 52LQFP | 25MHz | C128 die | 96K | 4K | 35 |
| MC9S12C96VFU | XL09S/0M66G | -40˚C, 105˚C | 80QFP | 25MHz | C128 die | 96K | 4K | 60 |
| MC9S12C96MFA | XL09S/0M66G | -40˚C,125˚C | 48LQFP | 25MHz | C128 die | 96K | 4K | 31 |
| MC9S12C96MPB | XL09S/0M66G | -40˚C,125˚C | 52LQFP | 25MHz | C128 die | 96K | 4K | 35 |
| MC9S12C96MFU | XL09S/0M66G | -40˚C, 125˚C | 80QFP | 25MHz | C128 die | 96K | 4K | 60 |
| MC9S12C64CFA | XL09S/0M66G | -40˚C, 85˚C | 48LQFP | 25MHz | C128 die | 64K | 4K | 31 |
| MC9S12C64CPB | XL09S/0M66G | -40˚C, 85˚C | 52LQFP | 25MHz | C128 die | 64K | 4K | 35 |

| Part Number | Mask[1] set | Temp. | Package | Speed | Die Type | Flash | RAM | I/O[2], [3] |
|---|---|---|---|---|---|---|---|---|
| MC9S12C64CFU | XL09S/0M66G | -40˚C, 85˚C | 80QFP | 25MHz | C128 die | 64K | 4K | 60 |
| MC9S12C64VFA | XL09S/0M66G | -40˚C,105˚C | 48LQFP | 25MHz | C128 die | 64K | 4K | 31 |
| MC9S12C64VPB | XL09S/0M66G | -40˚C,105˚C | 52LQFP | 25MHz | C128 die | 64K | 4K | 35 |
| MC9S12C64VFU | XL09S/0M66G | -40˚C, 105˚C | 80QFP | 25MHz | C128 die | 64K | 4K | 60 |
| MC9S12C64MFA | XL09S/0M66G | -40˚C,125˚C | 48LQFP | 25MHz | C128 die | 64K | 4K | 31 |
| MC9S12C64MPB | XL09S/0M66G | -40˚C,125˚C | 52LQFP | 25MHz | C128 die | 64K | 4K | 35 |
| MC9S12C64MFU | XL09S/0M66G | -40˚C, 125˚C | 80QFP | 25MHz | C128 die | 64K | 4K | 60 |
| MC9S12C32CFA16 | xL45J / xM34C | -40˚C, 85˚C | 48LQFP | 16MHz | C32 die | 32K | 2K | 31 |
| MC9S12C32CPB16 | xL45J / xM34C | -40˚C, 85˚C | 52LQFP | 16MHz | C32 die | 32K | 2K | 35 |
| MC9S12C32CFU16 | xL45J / xM34C | -40˚C, 85˚C | 80QFP | 16MHz | C32 die | 32K | 2K | 60 |
| MC9S12C32VFA16 | xL45J / xM34C | -40˚C,105˚C | 48LQFP | 16MHz | C32 die | 32K | 2K | 31 |
| MC9S12C32VPB16 | xL45J / xM34C | -40˚C,105˚C | 52LQFP | 16MHz | C32 die | 32K | 2K | 35 |
| MC9S12C32VFU16 | xL45J / xM34C | -40˚C, 105˚C | 80QFP | 16MHz | C32 die | 32K | 2K | 60 |
| MC9S12C32MFA16 | xL45J / xM34C | -40˚C,125˚C | 48LQFP | 16MHz | C32 die | 32K | 2K | 31 |
| MC9S12C32MPB16 | xL45J / xM34C | -40˚C,125˚C | 52LQFP | 16MHz | C32 die | 32K | 2K | 35 |
| MC9S12C32MFU16 | xL45J / xM34C | -40˚C, 125˚C | 80QFP | 16MHz | C32 die | 32K | 2K | 60 |
| MC9S12C32CFA25 | xL45J / xM34C | -40˚C, 85˚C | 48LQFP | 25MHz | C32 die | 32K | 2K | 31 |
| MC9S12C32CPB25 | xL45J / xM34C | -40˚C, 85˚C | 52LQFP | 25MHz | C32 die | 32K | 2K | 35 |
| MC9S12C32CFU25 | xL45J / xM34C | -40˚C, 85˚C | 80QFP | 25MHz | C32 die | 32K | 2K | 60 |
| MC9S12C32VFA25 | xL45J / xM34C | -40˚C,105˚C | 48LQFP | 25MHz | C32 die | 32K | 2K | 31 |
| MC9S12C32VPB25 | xL45J / xM34C | -40˚C,105˚C | 52LQFP | 25MHz | C32 die | 32K | 2K | 35 |
| MC9S12C32VFU25 | xL45J / xM34C | -40˚C, 105˚C | 80QFP | 25MHz | C32 die | 32K | 2K | 60 |
| MC9S12C32MFA25 | xL45J / xM34C | -40˚C,125˚C | 48LQFP | 25MHz | C32 die | 32K | 2K | 31 |
| MC9S12C32MPB25 | xL45J / xM34C | -40˚C,125˚C | 52LQFP | 25MHz | C32 die | 32K | 2K | 35 |
| MC9S12C32MFU25 | xL45J / xM34C | -40˚C, 125˚C | 80QFP | 25MHz | C32 die | 32K | 2K | 60 |

1. XL09S denotes all minor revisions of L09S maskset
   XL45J denotes all minor revisions of L45J maskset
   Maskset dependent errata can be accessed at
   http://e-www.motorola.com/wbapp/sps/site/prod_summary.jsp
2. All C-Family derivatives feature 1 CAN, 1 SCI, 1 SPI, an 8-channel A/D, a 6-channel PWM and an 8 channel timer. The GC-Family members do not have the CAN module
3. I/O is the sum of ports able to act as digital input or output.

**Table E-2. MC9S12GC-Family Part Number Coding**

| Part Number | Mask[1] set | Temp. | Package | Speed | Die Type | Flash | RAM | I/O[2], [3] |
|---|---|---|---|---|---|---|---|---|
| MC9S12GC32CFA | xL45J / xM34C | -40˚C, 85˚C | 48LQFP | 25MHz | C32 die | 32K | 2K | 31 |
| MC9S12GC32CPB | xL45J / xM34C | -40˚C, 85˚C | 52LQFP | 25MHz | C32 die | 32K | 2K | 35 |
| MC9S12GC32CFU | xL45J / xM34C | -40˚C, 85˚C | 80QFP | 25MHz | C32 die | 32K | 2K | 60 |
| MC9S12GC32VFA | xL45J / xM34C | -40˚C,105˚C | 48LQFP | 25MHz | C32 die | 32K | 2K | 31 |
| MC9S12GC32VPB | xL45J / xM34C | -40˚C,105˚C | 52LQFP | 25MHz | C32 die | 32K | 2K | 35 |
| MC9S12GC32VFU | xL45J / xM34C | -40˚C, 105˚C | 80QFP | 25MHz | C32 die | 32K | 2K | 60 |
| MC9S12GC32MFA | xL45J / xM34C | -40˚C,125˚C | 48LQFP | 25MHz | C32 die | 32K | 2K | 31 |
| MC9S12GC32MPB | xL45J / xM34C | -40˚C,125˚C | 52LQFP | 25MHz | C32 die | 32K | 2K | 35 |

| Part Number | Mask[1] set | Temp. | Package | Speed | Die Type | Flash | RAM | I/O[2], [3] |
|---|---|---|---|---|---|---|---|---|
| MC9S12GC32MFU | xL45J / xM34C | -40˚C, 125˚C | 80QFP | 25MHz | C32 die | 32K | 2K | 60 |
| MC9S12GC16CFA | xL45J / xM34C | -40˚C, 85˚C | 48LQFP | 25MHz | C32 die | 16K | 1K | 31 |
| MC9S12GC16CPB | xL45J / xM34C | -40˚C, 85˚C | 52LQFP | 25MHz | C32 die | 16K | 1K | 35 |
| MC9S12GC16CFU | xL45J / xM34C | -40˚C, 85˚C | 80QFP | 25MHz | C32 die | 16K | 1K | 60 |
| MC9S12GC16VFA | xL45J / xM34C | -40˚C,105˚C | 48LQFP | 25MHz | C32 die | 16K | 1K | 31 |
| MC9S12GC16VPB | xL45J / xM34C | -40˚C,105˚C | 52LQFP | 25MHz | C32 die | 16K | 1K | 35 |
| MC9S12GC16VFU | xL45J / xM34C | -40˚C, 105˚C | 80QFP | 25MHz | C32 die | 16K | 1K | 60 |
| MC9S12GC16MFA | xL45J / xM34C | -40˚C,125˚C | 48LQFP | 25MHz | C32 die | 16K | 1K | 31 |
| MC9S12GC16MPB | xL45J / xM34C | -40˚C,125˚C | 52LQFP | 25MHz | C32 die | 16K | 1K | 35 |
| MC9S12GC16MFU | xL45J / xM34C | -40˚C, 125˚C | 80QFP | 25MHz | C32 die | 16K | 1K | 60 |

1. XL09S denotes all minor revisions of L09S maskset
   XL45J denotes all minor revisions of L45J maskset
   Maskset dependent errata can be accessed at
   http://e-www.motorola.com/wbapp/sps/site/prod_summary.jsp
2. All C-Family derivatives feature 1 CAN, 1 SCI, 1 SPI, an 8-channel A/D, a 6-channel PWM and an 8 channel timer. The GC-Family members do not have the CAN module
3. I/O is the sum of ports capable to act as digital input or output.

## *How to Reach Us:*


**Home Page:**
www.freescale.com

**USA/Europe or Locations Not Listed:**
Freescale Semiconductor
Technical Information Center, CH370
1300 N. Alma School Road
Chandler, Arizona 85224
1-800-521-6274 or 480-768-2130

**Europe, Middle East, and Africa:**
+44 1296 380 456 (English)
+46 8 52200080 (English)
+49 89 92103 559 (German)
+33 1 69 35 48 48 (French)

**Japan:**
Freescale Semiconductor Japan Ltd.
Technical Information Center
3-20-1, Minami-Azabu, Minato-ku
Tokyo 106-0047, Japan
0120-191014 or +81-3-3440-3569

**Asia/Pacific:**
Freescale Semiconductor Hong Kong Ltd.
Technical Information Center
2 Dai King Street
Tai Po Industrial Estate
Tai Po, N.T., Hong Kong
852-26668334

***For Literature Requests Only:***
Freescale Semiconductor Literature Distribution Center
P.O. Box 5405
Denver, Colorado 80217
1-800-441-2447 or 303-675-2140
Fax: 303-675-2150



Information in this document is provided solely to enable system and software implementers to use Freescale Semiconductor products. There are no express or implied copyright licenses granted hereunder to design or fabricate any integrated circuits or integrated circuits based on the information in this document.

Freescale Semiconductor reserves the right to make changes without further notice to any products herein. Freescale Semiconductor makes no warranty, representation or guarantee regarding the suitability of its products for any particular purpose, nor does Freescale Semiconductor assume any liability arising out of the application or use of any product or circuit, and specifically disclaims any and all liability, including without limitation consequential or incidental damages. “Typical” parameters that may be provided in Freescale Semiconductor data sheets and/or specifications can and do vary in different applications and actual performance may vary over time. All operating parameters, including “Typicals”, must be validated for each customer application by customer’s technical experts. Freescale Semiconductor does not convey any license under its patent rights nor the rights of others. Freescale Semiconductor products are not designed, intended, or authorized for use as components in systems intended for surgical implant into the body, or other applications intended to support or sustain life, or for any other application in which the failure of the Freescale Semiconductor product could create a situation where personal injury or death may occur. Should Buyer purchase or use Freescale Semiconductor products for any such unintended or unauthorized application, Buyer shall indemnify and hold Freescale Semiconductor and its officers, employees, subsidiaries, affiliates, and distributors harmless against all claims, costs, damages, and expenses, and reasonable attorney fees arising out of, directly or indirectly, any claim of personal injury or death associated with such unintended or unauthorized use, even if such claim alleges that Freescale Semiconductor was negligent regarding the design or manufacture of the part.

Freescale™ and the Freescale logo are trademarks of Freescale Semiconductor, Inc. All other product or service names are the property of their respective owners. .

© Freescale Semiconductor, Inc. 2006. All rights reserved.



MC9S12C128
Rev 01.24

05/2010

ООО «ЛайфЭлектроникс» “LifeElectronics” LLC

ИНН 7805602321 КПП 780501001 Р/С 40702810122510004610 ФАКБ "АБСОЛЮТ БАНК" (ЗАО) в г.Санкт-Петербурге К/С 30101810900000000703 БИК 044030703

*Компания «Life Electronics» занимается поставками электронных компонентов импортного и отечественного производства от производителей и со складов крупных дистрибьюторов Европы, Америки и Азии.*

*С конца 2013 года компания активно расширяет линейку поставок компонентов по направлению коаксиальный кабель, кварцевые генераторы и конденсаторы (керамические, пленочные, электролитические), за счёт заключения дистрибьюторских договоров*

*Мы предлагаем:*

- *Конкурентоспособные цены и скидки постоянным клиентам.*
- *Специальные условия для постоянных клиентов.*
- *Подбор аналогов.*
- *Поставку компонентов в любых объемах, удовлетворяющих вашим потребностям.*

- *Приемлемые сроки поставки, возможна ускоренная поставка.*
- *Доставку товара в любую точку России и стран СНГ.*
- *Комплексную поставку.*
- *Работу по проектам и поставку образцов.*
- *Формирование склада под заказчика.*

- *Сертификаты соответствия на поставляемую продукцию (по желанию клиента).*
- *Тестирование поставляемой продукции.*
- *Поставку компонентов, требующих военную и космическую приемку.*
- *Входной контроль качества.*
- *Наличие сертификата ISO.*

*В составе нашей компании организован Конструкторский отдел, призванный помогать разработчикам, и инженерам.*

*Конструкторский отдел помогает осуществить:*

- *Регистрацию проекта у производителя компонентов.*
- *Техническую поддержку проекта.*
- *Защиту от снятия компонента с производства.*
- *Оценку стоимости проекта по компонентам.*
- *Изготовление тестовой платы монтаж и пусконаладочные работы.*

*Тел: +7 (812) 336 43 04 (многоканальный)*
*Email: org@lifeelectronics.ru*

***www.lifeelectronics.ru***