SeriesOne DR Series ATEX

AC DC

- Ratings of 6 & 12 Amps
- Load voltage ratings of 1-60VDC, 1-100VDC, 24-280VAC and 48-600VAC
- Fits standard 35mm DIN Rail
- LED input status indicator
- AC or DC control
- Zero Voltage (resistive loads) or Instantaneous (inductive loads) turn-on output
- UL and cUL Listed, HP Rated CE & RoHS Compliant
- UL 508 Endurance Rating for Enhanced Reliability
- UL Class I and II, Division 2, for Hazardous Locations

PRODUCT SELECTION

Control Voltage	280, 6 A	280 V, 12 A	600 V, 6 A	600 V, 12 A	60 V, 6 A	60 V, 12 A	100 V, 6 A	100 V, 12 A
4-32 VDC	DR24D06X	DR24D12X	DR48D06X	DR48D12X	DR06D06X	DR06D12X	DR10D06X	DR10D12X
90-140 VAC	DR24B06X	DR24B12X		DR48B12X				
200-280 VAC	DR24A06X	DR24A12X		DR48A12X				
18-36 VAC	DR24E06X	DR24E12X		DR48E12X				

AVAILABLE OPTIONS

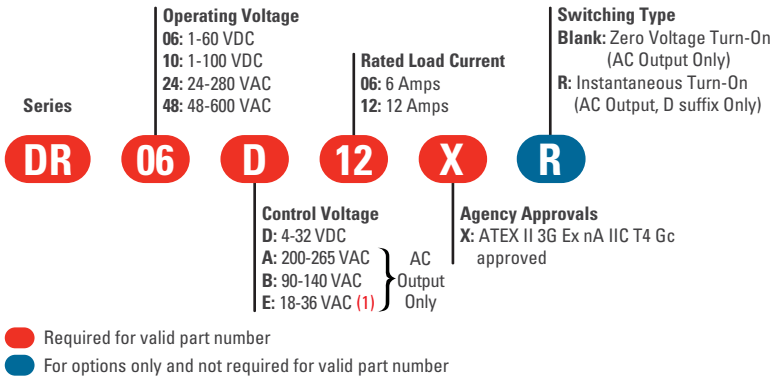

OUTPUT SPECIFICATIONS AC Output (2)

Description	DR24x06X	DR24x12X	DR48x06X	DR48X12X
Operating Voltage Range (47-63Hz) [Vrms]	24-280	24-280	48-600	48-600
Transient Overvoltage [Vpk]	600	600	1200	1200
Maximum Load Current, resistive [Arms] (3)	6	12	6	12
Minimum Load Current [mArms]	150	150	150	150
Maximum Off-State Leakage Current @ Rated Voltage [mArms]	0.1	0.1	0.1	0.1
Minimum Off-State dv/dt @ Maximum Rated Voltage [V/µsec] (4)	500	500	500	500
Maximum On-State Voltage Drop @ Rated Current [Vrms]	1.3	1.3	1.3	1.3
Maximum Surge Current (50/60Hz, 1 cycle) [Apk]	285/300	715/750	285/300	715/750
Maximum I^2t for Fusing (50/60 Hz, 1/2 cycle) [A^2 sec]	400/375	2560/2330	410/375	2560/2330
HP Rating UL 508/IEC60947 [HP (KW)] @ 240V	1/2 (.37)	1 (.75)	1/2 (.37)	1 (.75)
HP Rating UL 508/IEC60947 [HP (KW)] @ 380V	N/A	N/A	1 (1.5)	2 (1.5)
HP Rating UL 508/IEC60947 [HP (KW)] @ 480V	N/A	N/A	2 (1.5)	3 (2.2)
Minimum Power Factor (at Maximum Load)	0.5	0.5	0.5	0.5
Min/Max stranded wire	22/14 AWG	22/14 AWG	22/14 AWG	22/14 AWG
Min/Max solid wire	22/14 AWG	22/14 AWG	22/14 AWG	22/14 AWG
Weight (Typical)	1.76 oz. (50g)	3.17 oz. (90g)	1.76 oz. (50g)	3.17 oz. (90g)

Copyright © 2017 Crydom Inc. Specifications subject to change without notice.

OUTPUT SPECIFICATIONS DC Output (2)

Description	DR06D06X	DR10D06X	DR06D12X	DR10D12X
Operating Voltage [VDC]	1-60	1-100	1-60	1-100
Maximum Load Current [Adc] (3)	6	6	12	12
Minimum Load Current [mAdc]	2.5	2.5	2.5	2.5
Maximum Off-State Leakage Current @ Rated Voltage [mA]	0.1	0.1	0.1	0.1
Maximum On-State Voltage Drop @ Rated Current [Vpk]	0.6	0.6	0.6	0.6
Maximum Surge Current (10ms) [Apk]	60	60	100	100
On-State resistance at rated current [Ohms]	0.1	0.1	0.45	0.45
Min/Max stranded wire	22/14 AWG	22/14 AWG	22/14 AWG	22/14 AWG
Min/Max solid wire	22/14 AWG	22/14 AWG	22/14 AWG	22/14 AWG
Weight (typical)	1.94 oz. (55g)	1.76 oz. (50g)	3.17 oz (90g)	3.17 oz.(90g)

INPUT SPECIFICATIONS (2)

Description	DRxxDxxX	DRxxBxxX	DRxxAxxX	DRxxExxX
Control Voltage Range (5)	4-32 VDC	90-140 Vrms	200-265 Vrms	18-36 Vrms (1)
Minimum Turn-On Voltage	4.0 VDC	90 Vrms	200 Vrms	18 Vrms
Must Turn-Off Voltage	1.0 VDC	10 Vrms	40 Vrms	4 Vrms
Minimum Input Current for [mA] (6)	9	3	2.5	3.5
Maximum Input Current for [mA] (6)	11	5	3.3	8
Maximum Turn-on Time [msec] (7) (8)	1/2 Cycle	20 msec	20 msec	20 msec
Maximum Turn-off Time [msec] (9)	1/2 Cycle	30 msec	30 msec	30 msec
Min/Max stranded/solid wire	22/16 AWG	22/16 AWG	22/16 AWG	22/16 AWG

GENERAL SPECIFICATIONS (2)

Description	Parameters
Dielectric Strength, Input/Output/Base (50/60Hz)	4000 Vrms (10)
Minimum Insulation Resistance (@ 500 VDC)	10^9 Ohm
Maximum Capacitance, Input/Output	10 pF
Ambient Operating Temperature Range	-20 to 40 °C
Ambient Storage Temperature Range	-30 to 100 °C
Recommended Terminal Screw Torque Range	4.4-7.0 in-lb (0.5-0.8Nm)

GENERAL NOTES

(1) E option is UL certified for AC control voltage, but it works also with 18-36 VDC input range.
(2) All parameters at 25°C unless otherwise specified.
(3) See Derating curves
(4) Off-State dv/dt test method per EIA/NARM standard RS-443, paragraph 13.11.1
(5) DC control includes reverse polarity protection.
(6) Input circuitry incorporates active current limiter.
(7) Turn-on time for DC control random turn-on versions is 0.1 msec.
(8) Turn-on time for DC output 600µsec.
(9) Turn-off time for DC output 300µsec.
(10) 2500Vrms for DC output.

Standards of Compliance

IEC 62314
LC A, Resistive or Slightly Inductive Load Ratings: 12 A @40°C ambient for DR24x12X, 12 A @ 40°C ambient for DR48x12X
LC A, Resistive or Slightly Inductive Load Ratings: 6 A @ 40°C ambient for DR24x06X, 6 A @ 40°C ambient for DR48x06X

LC B, Motor Loads Ratings: 0.75KW @ 240 VAC for DR24x06X and 2.2KW @ 480 VAC DR48x12X
LC B, Motor Loads Ratings: 0.375KW @ 240 VAC for DR24x06X and 1.5KW @ 480 VAC DR48x12X

Shock and Vibration (Applies to all part numbers)
Vibration Resistence according to IEC 60068-2-6: **0.35mm and 0.75mm Amplitude over 10-55 Hz**
Shock Resistance according to IEC 60068-2-27: **15g/11ms**

EMC (Applies to all part numbers)
IEC 61000-4-2: Electrostatic Discharge- Level 3
IEC 61000-4-4: Electrically Fast Transients- Level 3
IEC 61000-4-5: Electrical Surges- Level 3

ANSI / ISA 12.12.01-2013
Nonincendive Electrical Equipment for Use in Class I and II, Division 2 and Class III, Division 1 and 2 Hazadous (classified) locations
This equipment is open-type device and is meant to be installed in an enclosure suitable for the enviroment such that the equipment is only accesible with the use of a tool suitable for use in Class 1, Division 2, Group A,B,C and Hazardous locations, or Nonhazardous locations only

WARNING-Explosion Hazard- Do not disconnect equipment while the circuit is live or unless the area is known to be free of ignitable concentrations
WARNING-Explosion Hazard- Substitution of any component may impair suitability for Class I, Division 2

ATEX
Compliance with Essential Health and Safety Requirements has been assessed by reference to Standards EN 60079-0:2012+A11:2013 and EN 60079-15-:2010

Copyright © 2017 Crydom Inc. Specifications subject to change without notice.

MECHANICAL SPECIFICATIONS [2]

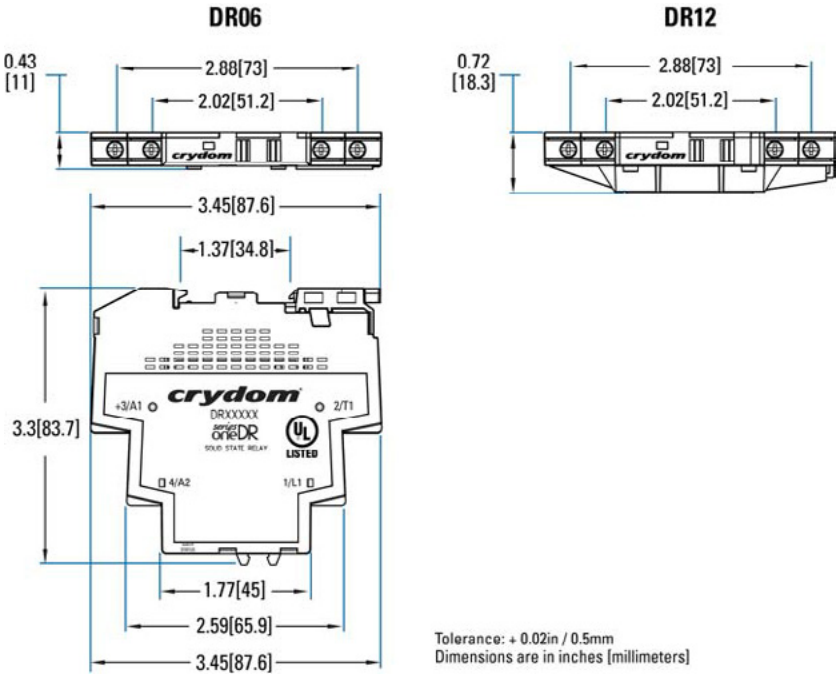

EQUIVALENT CIRCUIT BLOCK DIAGRAMS/WIRING DIAGRAMS

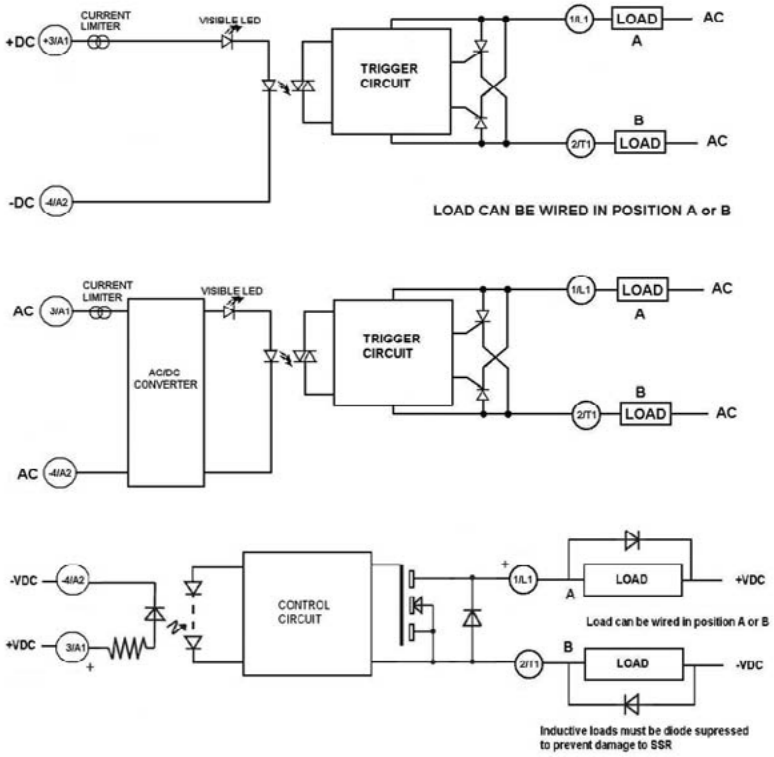

Copyright © 2017 Crydom Inc. Specifications subject to change without notice.

THERMAL DERATE INFORMATION

Derating Curves are not approved for the ATEX Certification

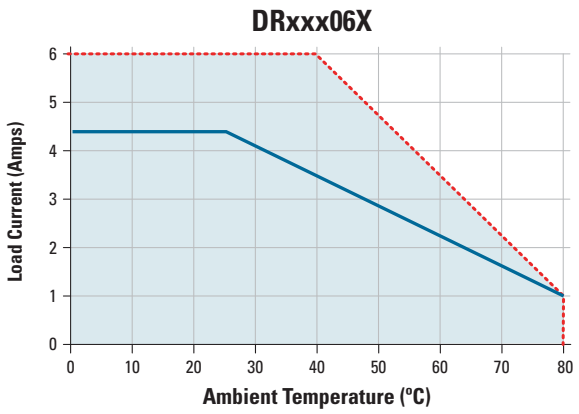

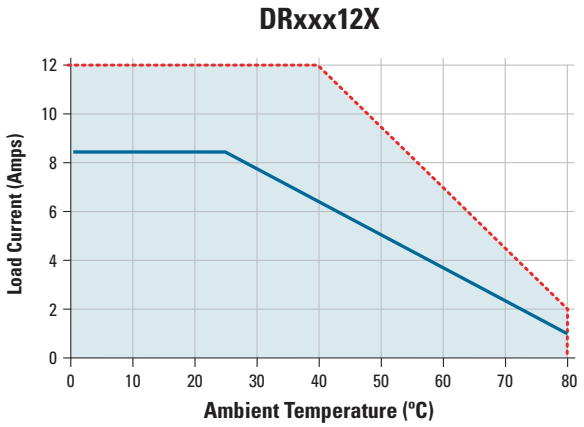

---- Installed single unit, distance to adjacent components ≥ 11 mm for DRxxx06X & ≥ 18mm for DRxxx12X

— Multiple units, no minimum spacing between components

AGENCY APPROVALS

Agency Approvals				
c UL us LISTED IND. CONT. EQ. 4WB8	E364559	CE	RoHS	Ex II 3G Ex nA IIC T4 Gc

Rev 052516

Copyright © 2017 Crydom Inc. Specifications subject to change without notice.

ACCESORIES

ID Marker Strips
CNLB, CNLN, CNL2

Blank Strips
Part no.: CNLB
A package of 10 plastic strips comprising 10 individual unprinted markers which can be placed on sockets' terminal block for easy identification during the use of multiple units.

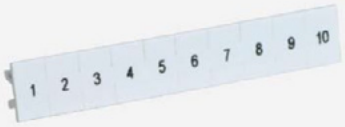

Numbered 1 to 10 Strips
Part no.: CNLN
A package of 10 plastic strips comprising 10 markers printed individually from 1 to 10 which can be placed on sockets' terminal block for easy identification during the use of multiple units.

Numbered 11 to 20 Strips
Part no.: CNL2
A package of 10 plastic strips comprising 10 markers printed individually from 11 to 20 which can be placed on sockets' terminal block for easy identification during the use of multiple units.

Copyright © 2017 Crydom Inc. Specifications subject to change without notice.

DANGER / PELIGRO / DANGER /GEFAHR / PERICOLO / 危险

HAZARD OF ELECTRIC SHOCK, EXPLOSION, OR ARC FLASH.

- Disconnect all power before installing or working with this equipment.
- Verify all connections and replace all covers before turning on power.

Failure to follow these instructions will result in death or serious injury.

RIESGO DE DESCARGA ELECTRICA O EXPLOSION.

- Desconectar todos los suministros de energia a este equipo antes de trabajar con este equipo.
- Verificar todas las conexiones y colocar todas las tapas antes de energizer el equipo.

El incumplimiento de estas instrucciones puede provocar la muerte o lesiones serias.

RISQUE DE DESCHARGE ELECTRIQUE OU EXPLOSION

- Eteindre toutes les sources d'énergie de cet appareil avant de travailler dessus de cet appareil
- Vérifier tous connections, et remettre tous couverts en olace avant de mettre sous

De non-suivi de ces instructions provoquera la mort ou des lésions sérieuses sérieuses.

GEFAHR EINES ELEKTRISCHE N SCHLAGES ODER EINER EXPLOSION.

- Stellen Sie jeglichen Strom ab, der dieses Gerät versorgt, bevor Sie an dem Gerät Arbeiten durchführen
- Vor dem Drehen auf Energie alle Anschlüsse überprüfen und alle Abdeckungen ersetzen.

Unterlassung dieser Anweisungen können zum Tode oder zu schweren Verletzungen führen.

RISCHIO DI SCOSSA ELETTRICA O DELL'ESPLOSIONE.

- Spenga tutta l'alimentazione che fornisce questa apparecchiatura prima di lavorare a questa apparecchiatura
- Verificare tutti i collegamenti e sostituire tutte le coperture prima dell'accensione

L'omissione di queste istruzioni provocherà la morte o lesioni serie

存在电击、爆炸或电弧闪烁危险

- 在操作此设备之前请先关闭电源。

若不遵守这些说明，可能会导致严重的人身伤害甚至死亡。

WARNING / AVERTISSEMENT / WARNUNG /ADVERTENCIA / AVVERTENZA / 警告

RISK OF MATERIAL DAMAGE AND HOT ENCLOSURE

- The product's side panels may be hot, allow the product to cool before touching.
- Follow proper mounting instructions including torque values.
- Do not allow liquids or foreign objects to enter this product.

Failure to follow these instructions can result in serious injury, or equipment damage.

RISQUE DE DOMMAGE MATERIEL ET DE SURCHAUFFE DU BOITIER

- Les panneaux latéraux du produit peuvent être chauds. Laisser le produit refroidir avant de le toucher.
- Respecter les consignes de montage, et notamment les couples de serrage.
- Ne pas laisser pénétrer de liquide ni de corps étrangers à l'intérieur du produit.

Le non-respect de cette directive peut entraîner, des lésions corporelles graves ou des dommages matériels.

GEFAHR VON MATERIALSCHÄDEN UND GEHÄUSEERHITZUNG

- Die Seitenwände können heiß sein. Lassen Sie das Produkt abkühlen, bevor Sie es berühren.
- Beachten Sie die Montageanweisungen,
- Führen Sie keine Flüssigkeiten oder Fremdkörper in das Produkt ein.

Die Nichtbeachtung dieser Anweisung kann Körperverletzung oder Materialschäden zur Folge haben.

RIESGO DE DAÑOS MATERIALES Y DE SOBRECALENTAMIENTO DE LA UNIDAD

- Los paneles laterales del producto pueden estar calientes. Esperar que el producto se enfríe antes de tocarlo.
- Respetar las instrucciones de montaje, y en particular los pares de apretado.
- No dejar que penetren líquidos o cuerpos extraños en el producto.

Si no se respetan estas precauciones pueden producirse graves lesiones, daños materiales.

RISCHIO DI DANNI MATERIALI E D'INVOLUCRO CALDO

- I pannelli laterali dell'apparecchio possono scottare; lasciar quindi raffreddare il prodotto prima di toccarlo.
- Seguire le istruzioni di montaggio corrette.
- Non far entrare liquidi o oggetti estranei in questo apparecchio.

La mancata osservanza di questa precauzione può causare gravi rischi per l'incolumità personale o danni alle apparecchiature.

材料损坏和高温外壳的危险性

- 产品的一侧面板可能很热，在其冷却前请不要触碰。
- 遵照正确的安装说明，包括扭矩值。
- 请勿让液体及其他异物进入本产品。

如不能正确执行这些操作说明，极有可能造成严重人体伤害或者设备的损坏。

Copyright © 2017 Crydom Inc. Specifications subject to change without notice.

ANNEX - ENVIROMENTAL INFORMATION

The environmental information disclosed in this annex including the EIP Pollution logo are in compliance with People's Republic of China Electronic Industry Standard SJ/T11364 – 2006, Marking for Control of Pollution Caused by Electronic Information Products.

Part Name	Toxic or hazardous Substance and Elements					
	Lead (Pb)	Mercury (Hg)	Cadmium (Cd)	Hexavalent Chromium (Cr (VI))	Polybrominated biphenyls (PBB)	Polybrominated diphenyl ethers (PBDE)
Semiconductor die	X	O	O	O	O	O
Solder	X	O	O	O	O	O

附件 - 环保信息

此附件所标示的包括电子信息产品污染图标的环保信息符合中华人民共和国电子行业标准 SJ/T11364 - 2006, 电子信息产品污染控制标识要求。

部件名称	有毒有害物质或元素					
	铅 (Pb)	汞 (Hg)	镉 (Cd)	六价铬 (Cr (VI))	多溴联苯 (PBB)	多溴二苯醚 (PBDE)
半导体芯片	X	O	O	O	O	O
焊接点	X	O	O	O	O	O

Copyright © 2017 Crydom Inc. Specifications subject to change without notice.

ООО «ЛайфЭлектроникс» “LifeElectronics” LLC

ИНН 7805602321 КПП 780501001 Р/С 40702810122510004610 ФАКБ "АБСОЛЮТ БАНК" (ЗАО) в г.Санкт-Петербурге К/С 30101810900000000703 БИК 044030703

Компания «Life Electronics» занимается поставками электронных компонентов импортного и отечественного производства от производителей и со складов крупных дистрибьюторов Европы, Америки и Азии.

С конца 2013 года компания активно расширяет линейку поставок компонентов по направлению коаксиальный кабель, кварцевые генераторы и конденсаторы (керамические, пленочные, электролитические), за счёт заключения дистрибьюторских договоров

Мы предлагаем:

- *Конкурентоспособные цены и скидки постоянным клиентам.*
- *Специальные условия для постоянных клиентов.*
- *Подбор аналогов.*
- *Поставку компонентов в любых объемах, удовлетворяющих вашим потребностям.*

- *Приемлемые сроки поставки, возможна ускоренная поставка.*
- *Доставку товара в любую точку России и стран СНГ.*
- *Комплексную поставку.*
- *Работу по проектам и поставку образцов.*
- *Формирование склада под заказчика.*

- *Сертификаты соответствия на поставляемую продукцию (по желанию клиента).*
- *Тестирование поставляемой продукции.*
- *Поставку компонентов, требующих военную и космическую приемку.*
- *Входной контроль качества.*
- *Наличие сертификата ISO.*

В составе нашей компании организован Конструкторский отдел, призванный помогать разработчикам, и инженерам.

Конструкторский отдел помогает осуществить:

- *Регистрацию проекта у производителя компонентов.*
- *Техническую поддержку проекта.*
- *Защиту от снятия компонента с производства.*
- *Оценку стоимости проекта по компонентам.*
- *Изготовление тестовой платы монтаж и пусконаладочные работы.*

Тел: +7 (812) 336 43 04 (многоканальный)
Email: org@lifeelectronics.ru

www.lifeelectronics.ru