AUTOMOTIVE GRADE

CS3972

1.25A High Efficiency Switching Regulator

Description

The CS3972 is a 1.25A, 60V, current mode, high efficiency, switching regulator circuit. It can be configured in buck, boost, forward, isolated and non-isolated topologies, using a single-ended switch.

The IC contains a 1.25A high efficiency output switch, precision bandgap reference, voltage regulator, error amplifier, oscillator, control, and protection circuitry.

Output transistor efficiency is achieved by keeping the switch in quasi-saturation when it is on. This minimizes the switch turn-off delay time and power dissipation, an important consideration for applications with wide ranging loads.

The precision reference is internally trimmed to 1.24V, while the oscillator frequency is internally trimmed to 40kHz. The on board 2.3V regulator powers the internal circuitry. By keeping the voltage regulator at 2.3V, the IC is able to operate down to 3V and maintain a constant input supply current of 6mA(typ).

Synchronization mode is achieved by applying a pulsating V_C voltage of less than 0.2V with a duration of about 0.5μs to V_C pin. The switching frequency can be adjusted from 50kHz to 70kHz. The IC's synchronization mode is set externally.

Protection circuitry includes a variable current limit with external voltage clamp, under-voltage and over-temperature protection.

Features

- **$75V_{MAX}$, $2A_{PEAK}$ Internal Switch**
- **3V to 60V Input Voltage Range**
- **6mA Input Supply Current**
- **1.24V Precision Reference**
- **40kHz Switching Frequency**
- **Variable Current Limit with External Voltage Clamp**
- **Under-Voltage Protection**
- **Over-Temperature Protection**
- **External Synchronization**

Block Diagram

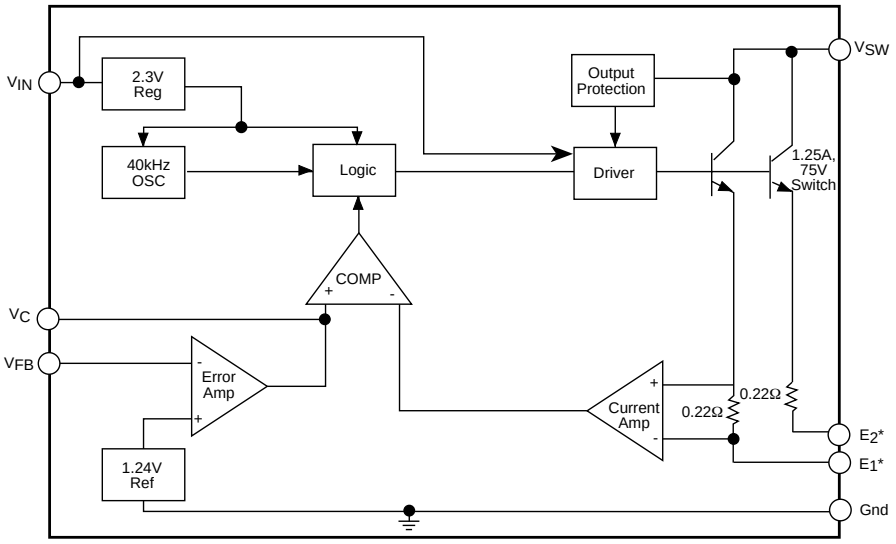

*Always connect E1 to Ground Pin on DIP package. Both emitters are tied to ground on TO-220 Package.

Package Options

16L SO Wide

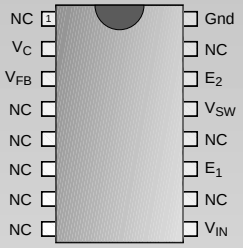

8L PDIP

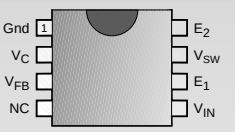

5L TO-220
Tab (Gnd)

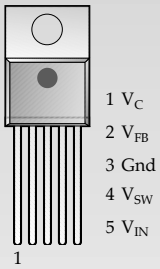

Cherry Semiconductor

Cherry Semiconductor Corporation
2000 South County Trail, East Greenwich, RI 02818
Tel: (401)885-3600 Fax: (401)885-5786
Email: info@cherry-semi.com
Web Site: www.cherry-semi.com

Absolute Maximum Ratings

Input Voltage Range ..... 3V to 60V
Output Switching Voltage 75V
Voltage Transient (t_r=10μs, t_f=400ms) 60V
ESD (Human Body Model; R=1.5kΩ, C=100pF) 2kV
Junction Temperature Range ..... -40°C to +150°C
Storage Temperature Range ..... -65°C to +150°C
Lead Temperature Soldering
  Wave Solder (through hole styles only) ..... 10 sec. max, 260°C peak
  Reflow (SMD styles only) ..... 60 sec. max above 183°C, 230°C peak
Feedback Pin Voltage (1ms transient) ..... ±15V

Electrical Characteristics: For 3V≤V_{CC}≤60V, -40°C≤T_A≤125°C unless otherwise specified.

PARAMETER	TEST CONDITIONS	MIN	TYP	MAX	UNIT
■					
Reference Voltage	V_C=0.8V; V_{FB}=V_{REF}	1.214	1.244	1.274	V
Line Regulation	V_C=0.8V; V_{FB}=V_{REF}, 3V≤V_{IN}≤60V			0.03	%/V
Feedback Input Current	V_C=0.8V; V_{FB}=V_{REF}		350	1100	nA
Minimum Input Voltage	V_C=V_{FB}=V_{REF}		2.6	3.0	V
Supply Current	V_C=0.6V; 3V≤V_{IN}≤60V		6.0	9.0	mA
Supply Current Increase during switch on time	V_C=open, 1.0V≤V_{FB}≤1.5V		25		mA/A
Switching Frequency	V_C=V_{FB}=V_{REF}; V_{SW}=15V	33	40	47	kHz
Maximum Duty Cycle	V_C=2V; V_{FB}=open, V_{SW}=15V		92		%
V_C Threshold	V_{FB}=open; V_{SW} =15V, duty cycle=0%	0.60	0.90	1.25	V
■ **Error Amplifier**					
Transconductance	V_C=0.8V; V_{FB}=V_{REF}, ΔI_C=±25μA	2400	4400	7000	μmho
Source/Sink Current	V_C=1.5V	120	200	400	μA
High Voltage Clamp	V_{FB}=1.0V		2.0		V
Low Voltage Clamp	V_{FB}=1.5V		0.38		V
Gain	0.9V≤V_C≤1.4V, V_{FB}=V_{REF}		800		V/V
■ **Output Switch**					
Breakdown Voltage	V_C=0.5V; 3V≤V_{IN}≤60V, I_{OUT}=5mA	75	90		V
On Resistance	V_C=open, V_{FB}=0.8V, I_{OUT}=1.25A		0.6	1.0	Ω
Control Voltage to Switch Current Transconductance	1.2V≤V_C≤1.8V		2		A/V
Current Limit	Duty Cycle≤50%, T_J≥25°C Duty Cycle≤50%, T_J<25°C Duty Cycle=80% Duty Cycle=80% (Note 1)	1.25 1.25 1.00 0.50		3.00 3.50 2.50 2.50	A A A A

Note 1: 16 lead SO wide package only.

Package Pin Description

PACKAGE PIN #			PIN SYMBOL	FUNCTION
16L SO Wide	**5L TO-220**	**8L PDIP**		
16	3	1	Gnd	Logic and power ground on TO-220. Logic ground only on 8L PDIP.
2	1	2	V_C	Control voltage can be used for frequency compensation, current limit threshold, frequency synchronization, and soft start.
3	2	3	V_{FB}	Feedback voltage is the negative input to the error amplifier.
1,4,5,6,7,8, 10,12,15		4	NC	No connection.
9	5	5	V_{IN}	Supply input voltage with a range of 3V to 60V.
11		6	E_1	Emitter One is a power ground which should always be connected to logic ground since it is used as the negative input to the current sense amp.
13	4	7	V_{SW}	Collector of internal 75V NPN power switch.
14		8	E_2	Emitter Two is a power ground which can be left disconnected to reduce the switch rating to 625mA.

Typical Performance Characteristics

Reference Voltage vs. Temperature

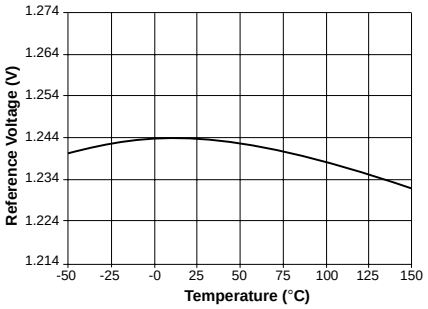

Switching Frequency vs. Temperature

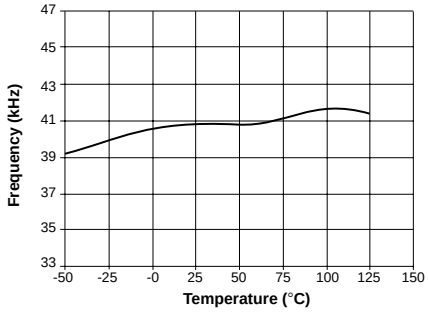

Driver Current vs. Switch Current

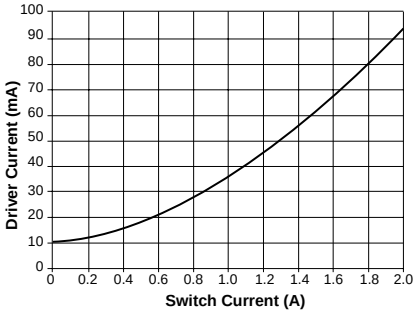

Maximum Duty Cycle

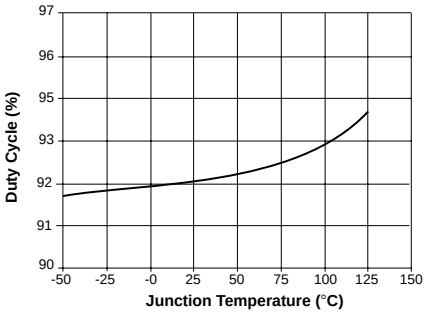

Switch Saturation Voltage

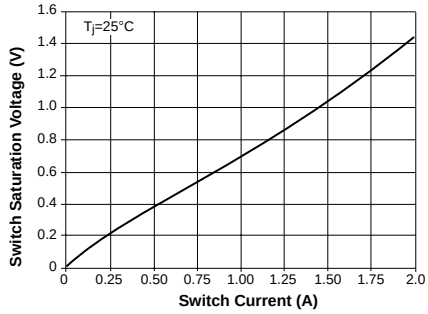

Circuit Description

The CS3972 has an on board, high current NPN transistor in its output stage. The output transistor is switched on every 25μs by the on board 40 kHz oscillator. The output is switched off as soon as the output current reaches a dynamically controlled level. That level is determined by three factors: the current drawn by the load, the input voltage, and the output voltage. This control scheme has several benefits. The IC reacts quickly to overvoltage and short circuit conditions and it is less sensitive to input voltage fluctuation.

Current drawn by the load influences when the output stage turns off. The voltage across the internal high precision resistor (0.11Ω) in the emitter of the output transistor generating the input to the current sensing amplifier. The output of the current sensing amplifier provides one of the inputs to the comparator.

The other input to the comparator connected to the output of the error amplifier whose inverting input is connected to the output voltage through the feedback circuitry while its noninverting input is set to an internal reference voltage of 1.24V. When the current sensing amplifier output exceeds the error amplifier output, the comparator switches off, triggering the logic which turns off the output stage.

All on board amplifier, logic and protection circuitry uses the internal 2.3V reference to minimize quiescent current drain (6mA) and permits IC operation down to 3V.

The anti-saturation circuitry minimizes output switch turn off time and power dissipation, by keeping the power NPN at the edge of saturation.

Application Diagrams

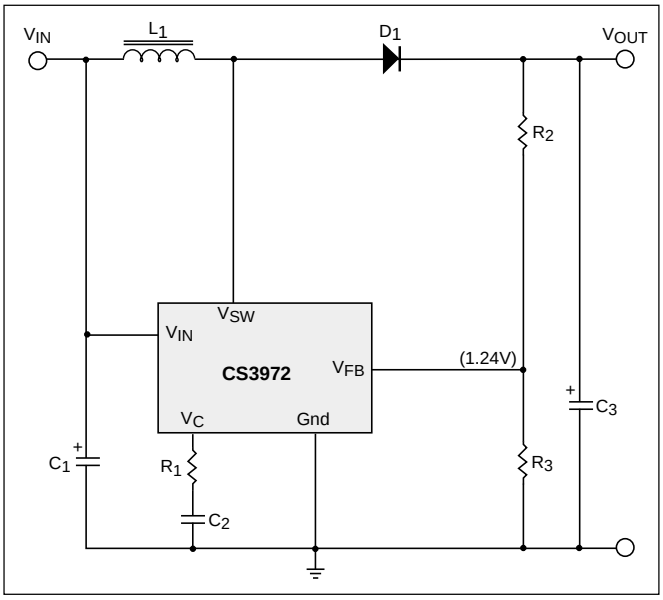

Figure 1: Boost Regulator

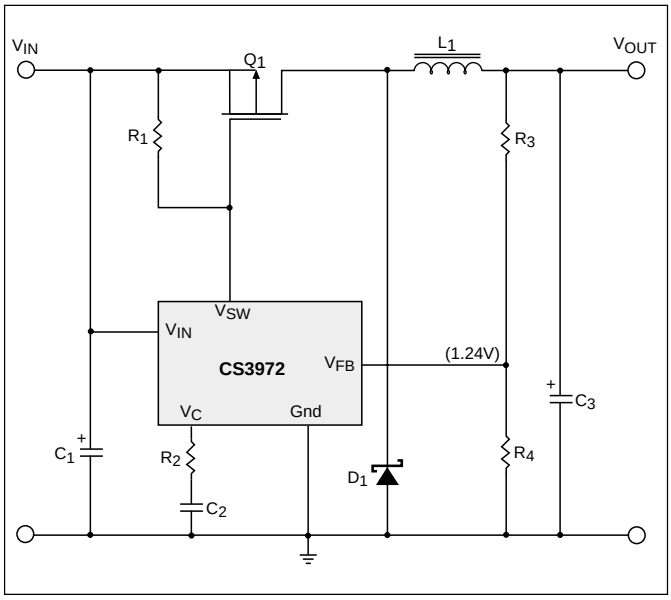

Figure 2: Buck Regulator with the External Switch

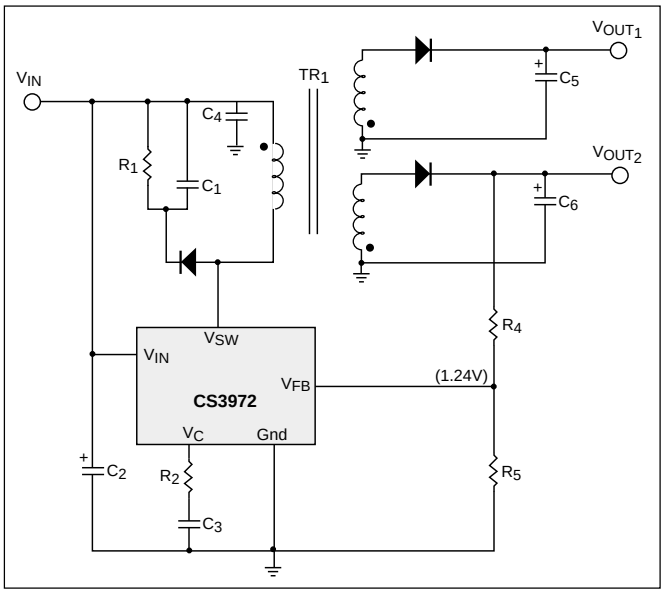

Figure 3: Flyback Multiple Output Regulator

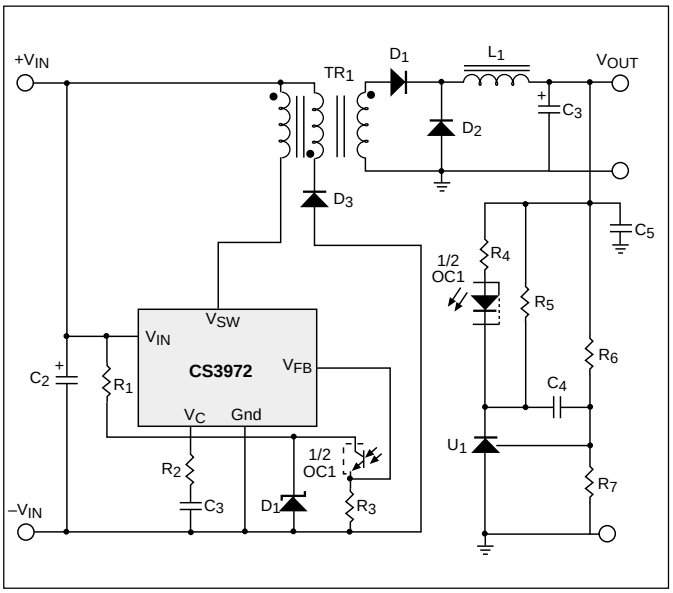

Figure 4: Isolated Forward Regulator

Package Specification

PACKAGE DIMENSIONS IN mm (INCHES)

Lead Count	D			
	Metric		English	
	Max	Min	Max	Min
8 Lead PDIP	10.16	9.02	.400	.355
16 Lead SO Wide	10.50	10.10	.413	.398

PACKAGE THERMAL DATA

Thermal Data		5L TO-220	8L PDIP	16L SO Wide	
$R_{\Theta JC}$	typ	1.7	52	23	°C/W
$R_{\Theta JA}$	typ	50	100	105	°C/W

Plastic DIP (N); 300 mil wide

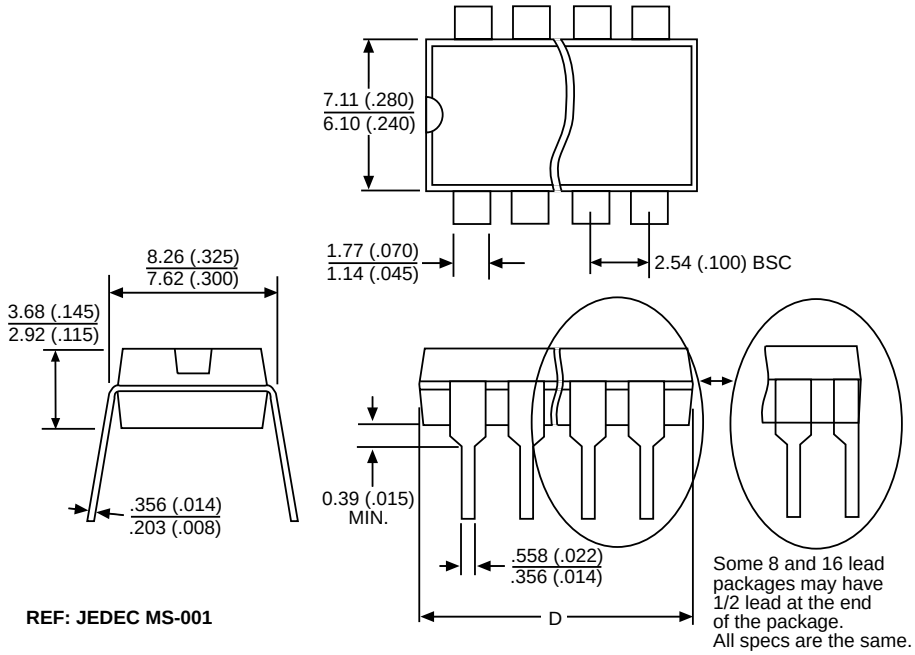

Surface Mount Wide Body (DW); 300 mil wide

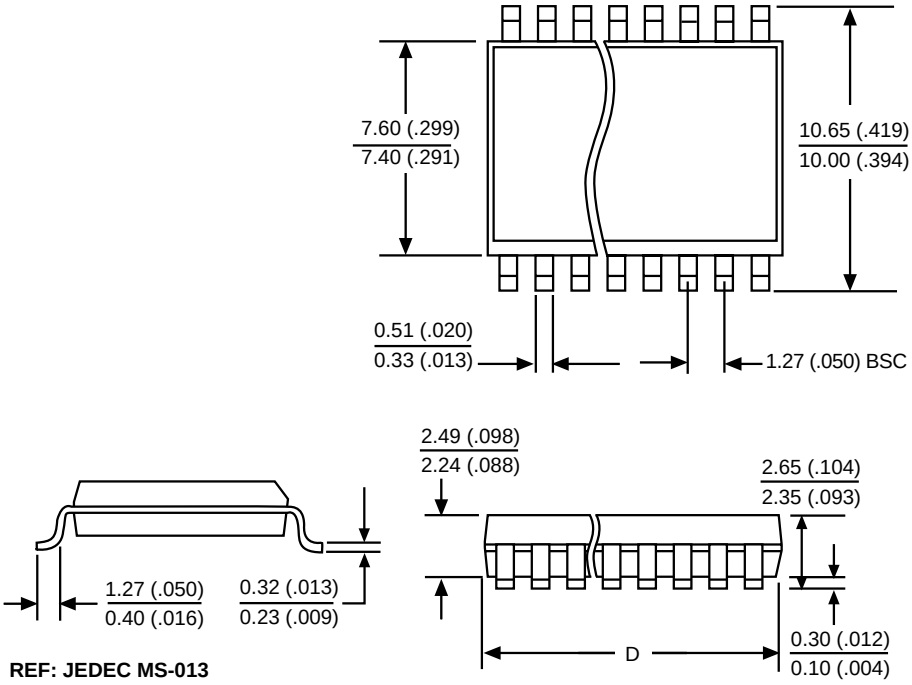

Package Specification

5 Lead TO-220 (T) Straight

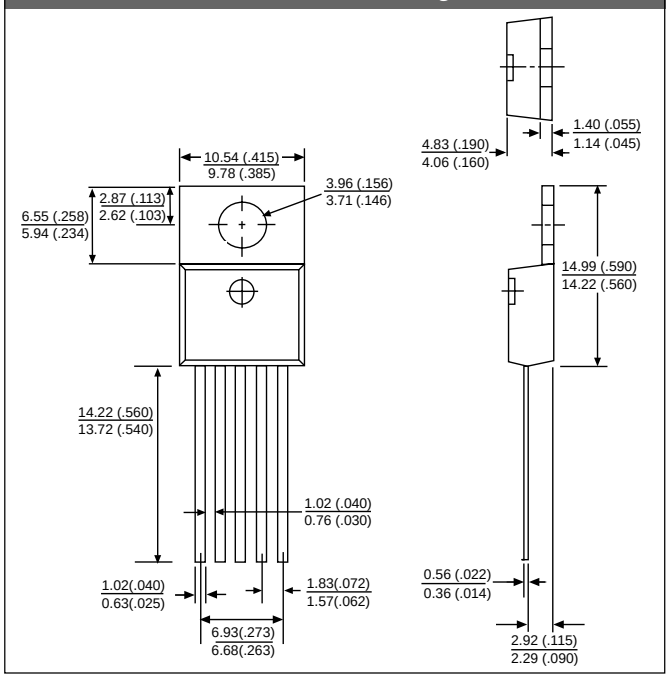

5 Lead TO-220 (TVA) Vertical

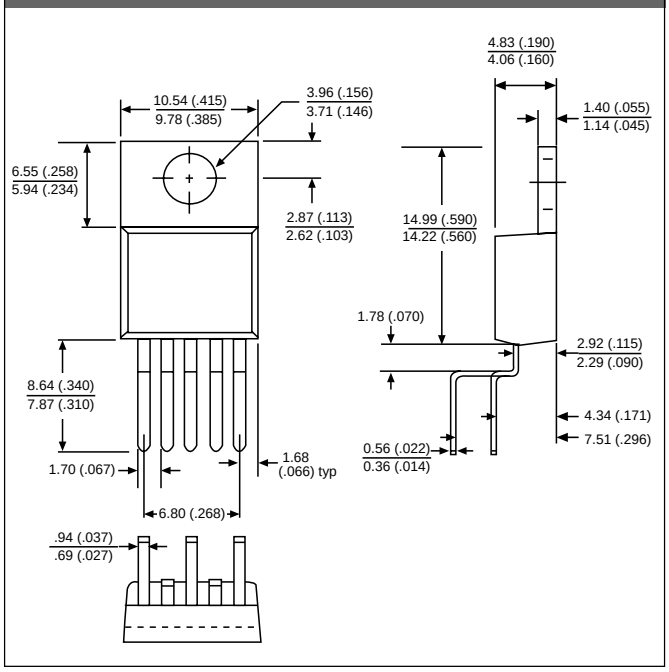

5 Lead TO-220 (THA) Horizontal

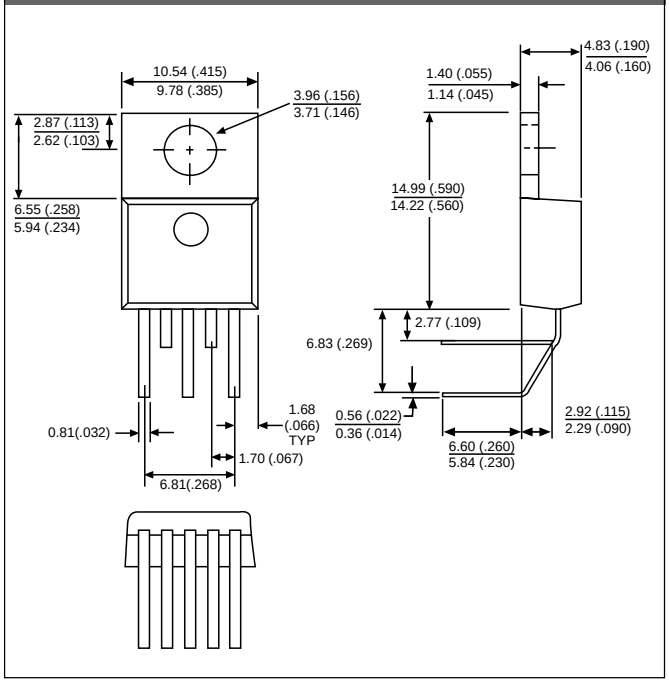

Ordering Information

Part Number	Description
CS3972YN8	8L PDIP
CS3972YDW16	16L SO Wide
CS3972YDWR16	16L SO Wide *(tape & reel)*
CS3972YT5	TO-220 Straight
CS3972YTVA5	TO-220 Vertical
CS3972YTHA5	TO-220 Horizontal

Cherry Semiconductor Corporation reserves the right to make changes to the specifications without notice. Please contact Cherry Semiconductor Corporation for the latest available information.

© 1999 Cherry Semiconductor Corporation

ООО «ЛайфЭлектроникс» “LifeElectronics” LLC

ИНН 7805602321 КПП 780501001 Р/С 40702810122510004610 ФАКБ "АБСОЛЮТ БАНК" (ЗАО) в г.Санкт-Петербурге К/С 30101810900000000703 БИК 044030703

Компания «Life Electronics» занимается поставками электронных компонентов импортного и отечественного производства от производителей и со складов крупных дистрибьюторов Европы, Америки и Азии.

С конца 2013 года компания активно расширяет линейку поставок компонентов по направлению коаксиальный кабель, кварцевые генераторы и конденсаторы (керамические, пленочные, электролитические), за счёт заключения дистрибьюторских договоров

Мы предлагаем:

- *Конкурентоспособные цены и скидки постоянным клиентам.*
- *Специальные условия для постоянных клиентов.*
- *Подбор аналогов.*
- *Поставку компонентов в любых объемах, удовлетворяющих вашим потребностям.*

- *Приемлемые сроки поставки, возможна ускоренная поставка.*
- *Доставку товара в любую точку России и стран СНГ.*
- *Комплексную поставку.*
- *Работу по проектам и поставку образцов.*
- *Формирование склада под заказчика.*

- *Сертификаты соответствия на поставляемую продукцию (по желанию клиента).*
- *Тестирование поставляемой продукции.*
- *Поставку компонентов, требующих военную и космическую приемку.*
- *Входной контроль качества.*
- *Наличие сертификата ISO.*

В составе нашей компании организован Конструкторский отдел, призванный помогать разработчикам, и инженерам.

Конструкторский отдел помогает осуществить:

- *Регистрацию проекта у производителя компонентов.*
- *Техническую поддержку проекта.*
- *Защиту от снятия компонента с производства.*
- *Оценку стоимости проекта по компонентам.*
- *Изготовление тестовой платы монтаж и пусконаладочные работы.*

Тел: +7 (812) 336 43 04 (многоканальный)
Email: org@lifeelectronics.ru

www.lifeelectronics.ru