High-Stability
I²C-Bus INTERFACE REAL TIME CLOCK MODULE

RX - 8025 SA / NB

- Built-in 32.768 kHz crystal unit : Frequency adjusted for high accuracy ($\pm 5 \times 10^{-6}$ / Ta = +25 °C)
- Interface Type : I²C-Bus Interface (400 kHz)
- Operating voltage range: 1.70 V to 5.5 V
- Wide Timekeeper voltage range : 1.15 V to 5.5 V
- Various detection Functions : Ex. Oscillation stop detection function
- Low backup current : 0.48 µA / 3 V (Typ.)
- 32.768 kHz frequency output function : C-MOS output With Control Pin
- The various functions include full calendar, alarm, timer.

* The I²C-Bus is a trademark of NXP Semiconductors

RoHS Compliant

Product Number (Please contact us)
RX-8025SA : Q41802551xxxx00
RX-8025NB : Q41802591xxxx00

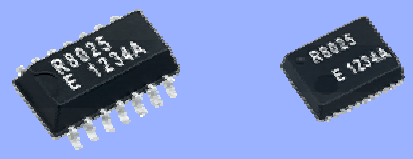

Actual size

RX-8025SA

RX-8025NB

Block diagram

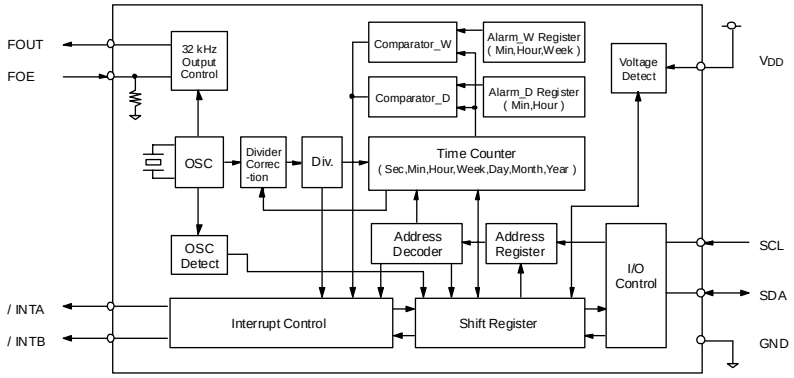

Overview

- **Features built-in 32.768 kHz crystal unit**
  - Frequency adjusted for high accuracy. ($\pm 5 \times 10^{-6}$ / Ta = +25 °C) (Equivalent to 13 seconds of monthly deviation)
- **The various detection function**
  - Power supply voltage monitoring function (with selectable detection threshold)
  - Stop detection function
  - Power-on reset detection function
- **Alarm function and Timer function**
  - Timer function produces a periodic interruption signal. As for the Alarm function an optional combination is produced. (Date of the week , time , minute)

Pin Function

Signal Name	Input / output	Function
SCL	Input	Serial clock input pin
SDA	Bi-directional	Data input and output pin
FOUT	Output	32.768 kHz clock output pin with the output control function. (C-MOS)
FOE	Input	
/ INTA	Output	Interrupt output A pin (N-ch open drain)
/ INTB	Output	Interrupt output B pin (N-ch open drain)
TEST	—	* Used by the manufacture for testing. (Do not connect externally.)
VDD	—	Connected to a positive power supply.
GND	—	Connected to a ground.

FOE input	/CLEN1 bit	/CLEN2 bit	FOUT output
L	X	X	OFF (LOW)
H	0	0	32.768 kHz
	0	1	32.768 kHz
	1	0	32.768 kHz
	1	1	OFF(LOW)

Terminal connection / External dimensions (Unit:mm)

RX – 8025 SA

1. N.C.
2. SCL
3. FOUT
4. N.C.
5. TEST
6. VDD
7. FOE
14. N.C.
13. SDA
12. / INTB
11. GND
10. / INTA
9. N.C.
8. N.C.

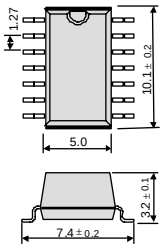

SOP – 14 pin

RX – 8025 NB

1. FOE
2. VDD
3. (GND)
4. TEST
5. FOUT
6. SCL
7. SDA
8. / INTB
9. GND
10. / INTA
11. N.C.
22. N.C.
21. N.C.
20. N.C.
19. N.C.
18. N.C.
17. N.C.
16. N.C.
15. N.C.
14. N.C.
13. –
12. –

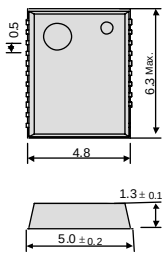

SON – 22 pin

Metal may be exposed on the top or bottom of this product. This will not affect any quality, reliability or electrical spec.

Specifications (characteristics)

* Refer to application manual for details.

Recommended Operating Conditions

Item	Symbol	Condition	Min.	Typ.	Max.	Unit
Power voltage	VDD	—	1.7	3.0	5.5	V
Clock voltage	VCLK	—	1.15	3.0	5.5	V
Operating temperature	TOPR	—	−40	+25	+85	°C

Frequency characteristics

Item	Symbol	Condition	Range	Unit
Frequency tolerance	Δ f / f	Ta = +25 °C VDD = 3.0 V	AA: 5 ± 5 *1) AC: 0 ± 5 *2)	$\times 10^{-6}$
Oscillation start-up time	tSTA	Ta = +25 °C VDD = 2.0 V	1 Max.	s
Frequency voltage characteristics	f / V	Ta = +25 °C VDD = 2.0 V to 5.5 V	± 1 Max.	$\times 10^{-6}$

*1) *2) Equivalent to 13 seconds of monthly deviation (excluding offset).

Current consumption characteristics

Ta = −40 °C to +85 °C

Item	Symbol	Condition		Min.	Typ.	Max.	Unit
Curent Consumption	IBK	fSCL = 0Hz FOE = GND FOUT ; output OFF(LOW)	VDD = 5 V		0.60	1.80	µA
			VDD = 3 V		0.48	1.20	
	I32k	fSCL = 0Hz VDD, FOE = 5.5 V FOUT ; output ON (Output=OPEN; CL = 0 pF)	VDD = 5.5 V		3.0	6.5	µA

Power supply detection voltage

Ta = −30 °C to +70 °C

Item	Symbol	Condition	Min.	Typ.	Max.	Unit
High-voltage mode	VDETH	VDD pin	1.90	2.10	2.30	V
Low-voltage mode	VDETL	VDD pin	1.15	1.30	1.45	V

“QMEMS” EPSON TOYOCOM

In order to meet customer needs in a rapidly advancing digital, broadband and ubiquitous society, we are committed to offering products that are one step ahead of the market and a rank above the rest in quality. To achieve our goals, we follow a “3D (three device) strategy” designed to drive both horizontal and vertical growth. We will to grow our three device categories of “Timing Devices”, ”Sensing Devices” and “Optical Devices”, and expand vertical growth through a combination of products from these categories.

A Quartz MEMS is any high added value quartz device that exploits the characteristics of quartz crystal material but that is produced using MEMS (micro-electro-mechanical system) processing technology.

Market needs are advancing faster than previously imagined toward smaller, more stable crystal products, but we will stay ahead of the curve by rolling out products that exceed market speed and quality requirements. We want to further accelerate the 3D strategy by QMEMS.

Quartz devices have become crucial in the network environment where products are increasingly intended for broadband, ubiquitous applications and where various types of terminals can transfer information almost immediately via LAN and WAN on a global scale. Epson Toyocom Corporation addresses every single aspect within a network environment. The new corporation offers “Digital Convergence” solutions to problems arising with products for consumer use, such as, core network systems and automotive systems.

QMEMS

PROMOTION OF ENVIRONMENTAL MANAGEMENT SYSTEM CONFORMING TO INTERNATIONAL STANDARDS

At Epson Toyocom, all environmental initiatives operate under the Plan-Do-Check-Action(PDCA) cycle designed to achieve continuous improvements. The environmental management system (EMS) operates under the ISO 14001 environmental management standard.

ISO 14000 is an international standard for environmental management that was established by the International Standards Organization in 1996 against the background of growing concern regarding global warming, destruction of the ozone layer, and global deforestation.

All of our major manufacturing and non-manufacturing sites,in Japan and overseas, completed the acquisition of ISO 14001 certification.
In the future, new group companies will be expected to acquire the certification around the third year of operations.

WORKING FOR HIGH QUALITY

In order provide high quality and reliable products and services than meet customer needs,
Epson Toyocom made early efforts towards obtaining ISO9000 series certification and has acquired ISO9001 for all business establishments in Japan and abroad. We have also acquired ISO/TS 16949 certification that is requested strongly by major automotive manufacturers as standard.

QS-9000 is an enhanced standard for quality assurance systems formulated by leading U.S. automobile manufacturers based on the international ISO 9000 series.

ISO/TS 16949 is a global standard based on QS-9000, a severe standard corresponding to the requirements from the automobile industry.

►Explanation of the mark that are using it for the catalog

Pb Free	**►Pb free.** **►Complies with EU RoHS directive.**
RoHS Compliant	**►Pb free terminal designed. Contains Pb in products exempted by RoHS directive.** **(Contains Pb in sealing glass, high melting temperature type solder or other.)** **►Complies with EU RoHS directive.**
For Automotive	**►The products have been designed for high reliability applications such as Automotive.**

Notice

- This material is subject to change without notice.
- Any part of this material may not be reproduced or duplicated in any form or any means without the written permission of Epson Toyocom.
- The information, applied circuitry, programming, usage, etc., written in this material is intended for reference only. Epson Toyocom does not assume any liability for the occurrence of infringing on any patent or copyright of a third party. This material does not authorize the licensing for any patent or intellectual copyrights.
- Any product described in this material may contain technology or the subject relating to strategic products under the control of the Foreign Exchange and Foreign Trade Law of Japan and may require an export license from the Ministry of International Trade and Industry or other approval from another government agency.
- You are requested not to use the products (and any technical information furnished, if any) for the development and/or manufacture of weapon of mass destruction or for other military purposes. You are also requested that you would not make the products available to any third party who may use the products for such prohibited purposes.
- These products are intended for general use in electronic equipment. When using them in specific applications that require extremely high reliability, such as the applications stated below, you must obtain permission from Epson Toyocom in advance.
  / Space equipment (artificial satellites, rockets, etc.) / Transportation vehicles and related (automobiles, aircraft, trains, vessels, etc.)
  / Medical instruments to sustain life / Submarine transmitters / Power stations and related / Fire work equipment and security equipment
  / traffic control equipment / and others requiring equivalent reliability.
- In this new crystal master for Epson Toyocom, product codes and markings will remain as previously identified prior to the merger.
  Due to the on-going strategy of gradual unification of part numbers, please review product codes and markings, as they will change during the course of the coming months.

  We apologize for the inconvenience, but we will eventually have a unified part numbering system for Epson Toyocom that will be user friendly.

Mouser Electronics

Authorized Distributor

Click to View Pricing, Inventory, Delivery & Lifecycle Information:

Epson:
RX-8025SA:AA0

ООО «ЛайфЭлектроникс» “LifeElectronics” LLC

ИНН 7805602321 КПП 780501001 Р/С 40702810122510004610 ФАКБ "АБСОЛЮТ БАНК" (ЗАО) в г.Санкт-Петербурге К/С 30101810900000000703 БИК 044030703

Компания «Life Electronics» занимается поставками электронных компонентов импортного и отечественного производства от производителей и со складов крупных дистрибьюторов Европы, Америки и Азии.

С конца 2013 года компания активно расширяет линейку поставок компонентов по направлению коаксиальный кабель, кварцевые генераторы и конденсаторы (керамические, пленочные, электролитические), за счёт заключения дистрибьюторских договоров

Мы предлагаем:

- *Конкурентоспособные цены и скидки постоянным клиентам.*
- *Специальные условия для постоянных клиентов.*
- *Подбор аналогов.*
- *Поставку компонентов в любых объемах, удовлетворяющих вашим потребностям.*

- *Приемлемые сроки поставки, возможна ускоренная поставка.*
- *Доставку товара в любую точку России и стран СНГ.*
- *Комплексную поставку.*
- *Работу по проектам и поставку образцов.*
- *Формирование склада под заказчика.*

- *Сертификаты соответствия на поставляемую продукцию (по желанию клиента).*
- *Тестирование поставляемой продукции.*
- *Поставку компонентов, требующих военную и космическую приемку.*
- *Входной контроль качества.*
- *Наличие сертификата ISO.*

В составе нашей компании организован Конструкторский отдел, призванный помогать разработчикам, и инженерам.

Конструкторский отдел помогает осуществить:

- *Регистрацию проекта у производителя компонентов.*
- *Техническую поддержку проекта.*
- *Защиту от снятия компонента с производства.*
- *Оценку стоимости проекта по компонентам.*
- *Изготовление тестовой платы монтаж и пусконаладочные работы.*

Тел: +7 (812) 336 43 04 (многоканальный)
Email: org@lifeelectronics.ru

www.lifeelectronics.ru