AIT-Ⅱ CONNECTOR

Board-to-wire/Wire-to-wire

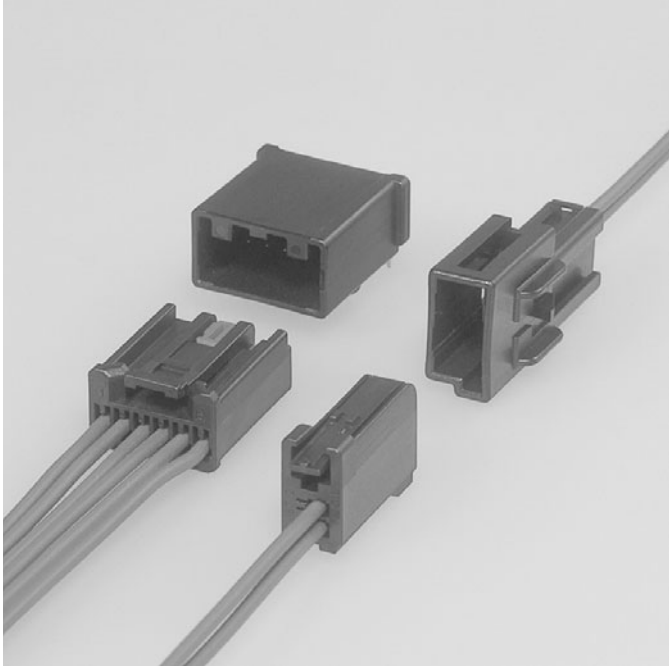

0.64 unsealed low-profile connector series for use in a wide range of automotive applications.

Features

●Ultra Low Profile Connector
Over 30% Height Reduction as compared to the Standard USCAR Footprints.

●Variations
There are multiple varieties of AIT-Ⅱ Connectors which can satisfy your needs.

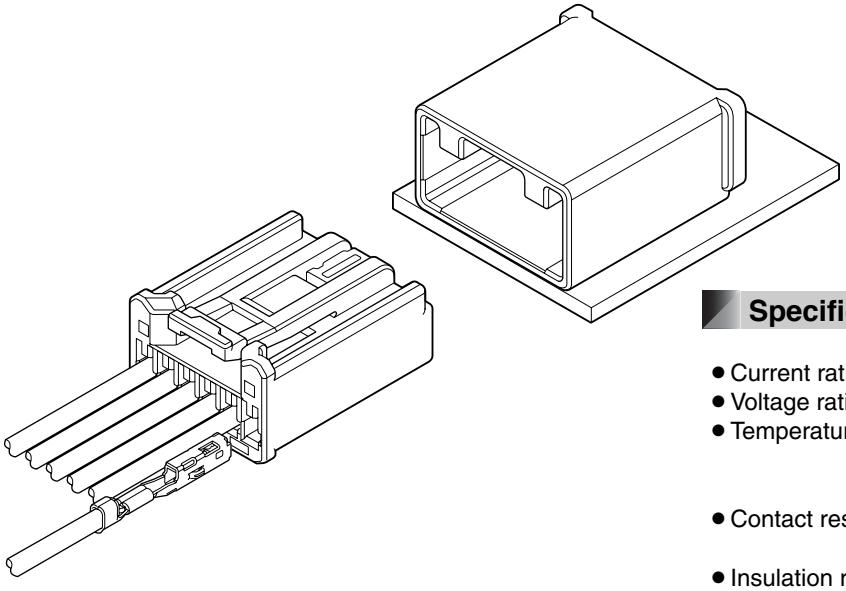

Specifications

- Current rating: 5A DC max.
- Voltage rating: 14V DC
- Temperature range: -40°C to +105°C
  (including temperature rise in applying electrical current)
- Contact resistance: Initial value/15mΩ max.
  After environmental testing/15mΩ max.
- Insulation resistance: 100MΩ min.
- Applicable wire: SAE/ AVSS/ CAVS/ FLRY
  0.3mm^2 to 0.85mm^2

∗ Compliant with ELV/RoHS.
∗ Contact JST for details.

Female terminal

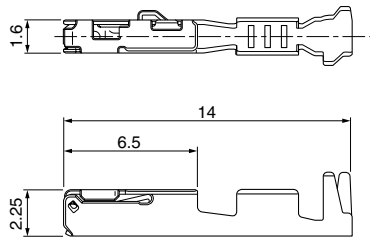

Model No.	Applicable wire range		Q'ty/reel
	Conductor (mm^2)	Insulation O.D. (mm)	
①**SAIT-A03T-M064**	0.3 to 0.5	≤1.9	6,500
①**SAIT-A02T-M064**	0.75 to 0.85	≤1.9	6,500
②**SAIT-A03GF-M064**	0.3 to 0.5	≤1.9	6,500
②**SAIT-A02GF-M064**	0.75 to 0.85	≤1.9	6,500

Material and Finish
①Copper alloy, tin-plated (reflow treatment) ②Copper alloy, nickel-undercoated, Contact area; gold-plated Barrel area; tin-plated

Female connector (Single row)

- **6 circuits**

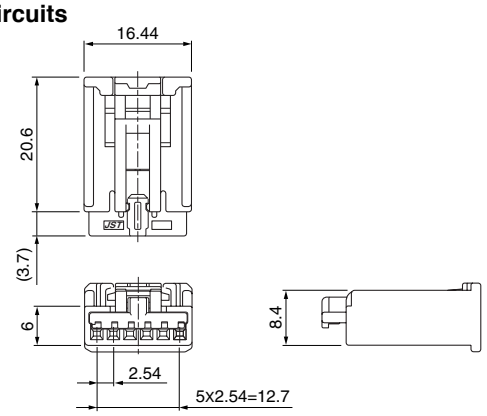

- **7 circuits**

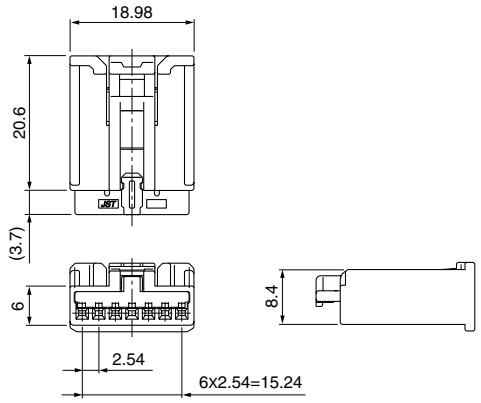

- **10 circuits**

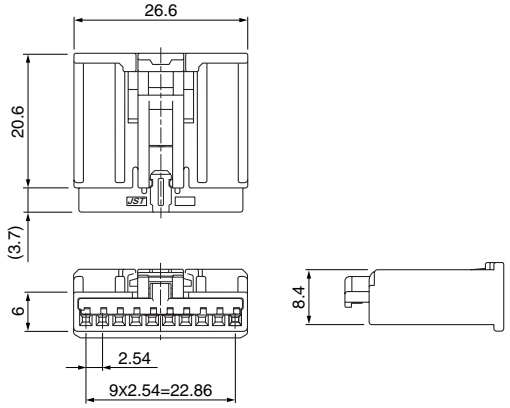

Circuits	Model No.	Q'ty/box	Housing Color
6	**AIT2PB-06-1AK**	350	Black
	AIT2PB-06-1BH	350	Gray
	AIT2PB-06-1FS	350	Natural (White)
7	**AIT2PB-07-1BH**	300	Gray
	AIT2PB-07-1FS	300	Natural (White)
10	**AIT2PB-10-1AK**	200	Black
	AIT2PB-10-1BH	200	Gray
	AIT2PB-10-1DM	200	Green
	AIT2PB-10-1FS	200	Natural (White)
	AIT2PB-10-1AD	200	Orange

Material
Housing: Glass-filled PBT TPA: Glass-filled PBT, red

Female connector (Dual row)

● **10 circuits**

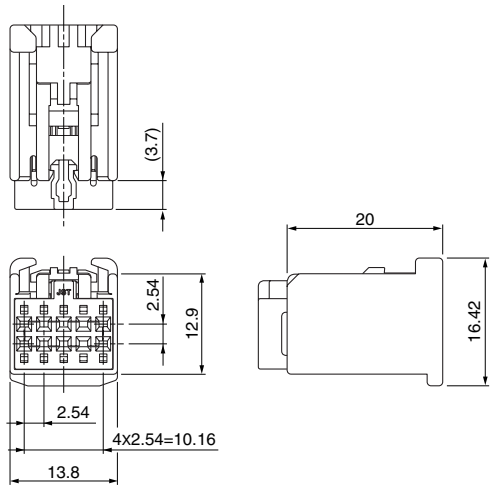

● **18 circuits**

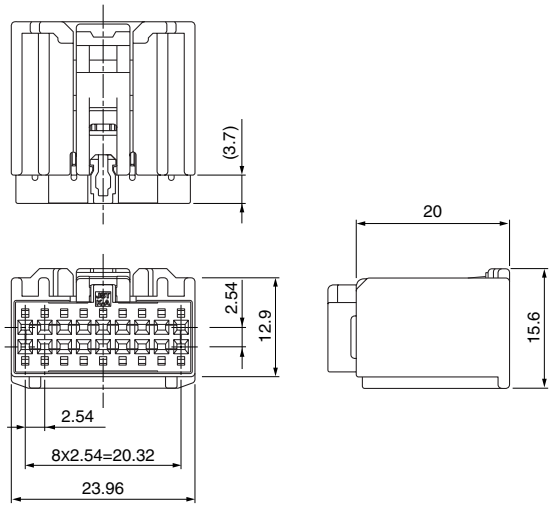

● **22 circuits**

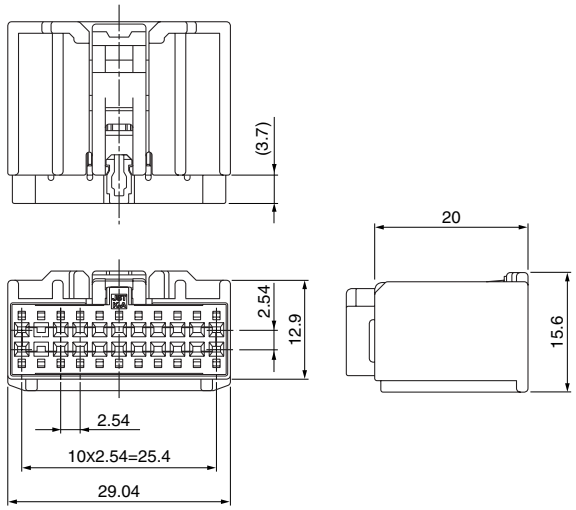

Circuits	Model No.	Q'ty/box	Housing Color	TPA Color
10	**AIT2PB-10P-2AK**	200	Black	Natural (White)
	AIT2PB-10P-2BH	200	Gray	Natural (White)
18	**AIT2PB-18-2AD**	120	Orange	Black
	AIT2PB-18-2BD	120	Orange	Natural (White)
	AIT2PB-18-2AK	120	Black	Natural (White)
	AIT2PB-18-2BH	120	Gray	Natural (White)
	AIT2PB-18-2DM	120	Green	Natural (White)
	AIT2PB-18-2FS	120	Natural (White)	Black
22	**AIT2PB-22-2AK**	100	Black	Natural (White)
	AIT2PB-22-2BH	100	Gray	Natural (White)
	AIT2PB-22-2CN	100	Brown	Natural (White)
	AIT2PB-22-2FS	100	Natural (White)	Black

Material
Housing: Glass-filled PBT TPA: Glass-filled PBT

Female connector (Side Lock)

Side-Load TPA

● 3 circuits

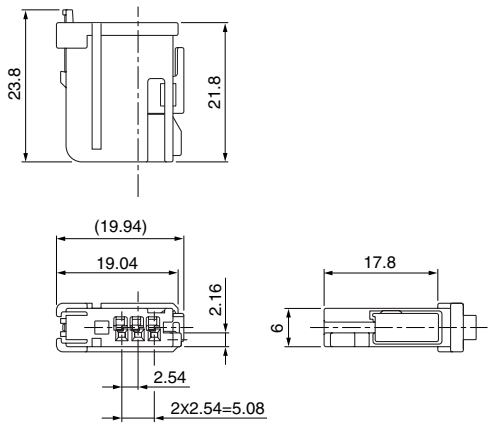

● 4 circuits

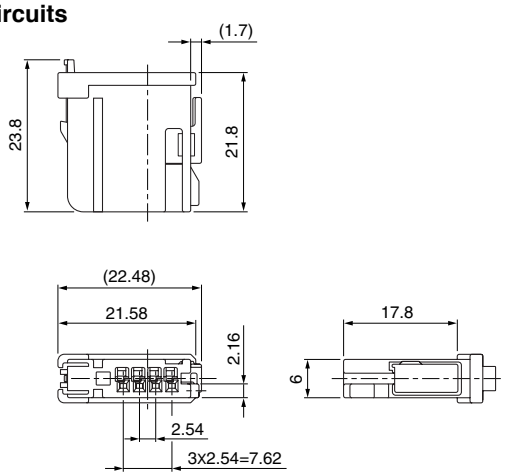

Front-Load TPA

● 2 circuits

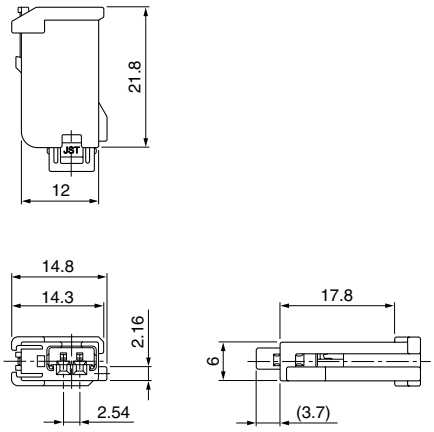

● 4 circuits

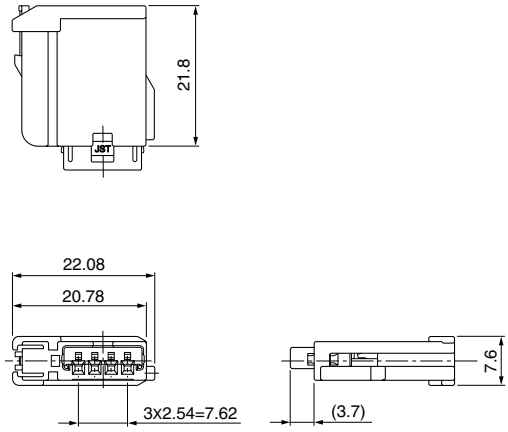

Circuits	TPA Location	Model No.	Q'ty/box	Housing Color
2	Front-Load	**AIT2PB-02G-1AK**	400	Black
		AIT2PB-02A-1FS	400	Natural (White)
3	Side-Load	**AIT2PB-03B-1AK**	400	Black
4	Front-Load	**AIT2PB-04G-1AK**	400	Black
	Side-Load	**AIT2PB-04B-1AK**	400	Black

Material
Housing: Glass-filled PBT TPA: Glass-filled PBT, red

Male terminal

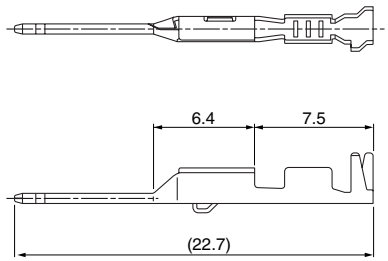

Model No.	Applicable wire range		Q'ty/reel
	Conductor (mm^2)	Insulation O.D. (mm)	
①**SAITW-A03T-064**	0.3 to 0.5	≤1.9	7,000
①**SAITW-A02T-064**	0.75 to 0.85	≤1.9	7,000
②**SAITW-A03GF-064**	0.3 to 0.5	≤1.9	7,000
②**SAITW-A02GF-064**	0.75 to 0.85	≤1.9	7,000

Material and Finish
①Brass, tin-plated (reflow treatment) ②Brass, nickel-undercoated, Contact area: gold-plated Barrel area: tin-plated

Male connector (Top entry type)

● **4 circuits**

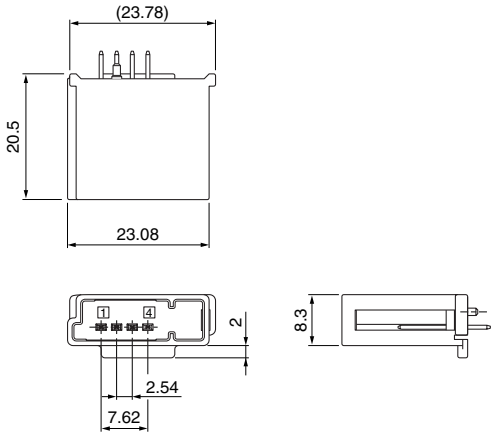

● **6 circuits**

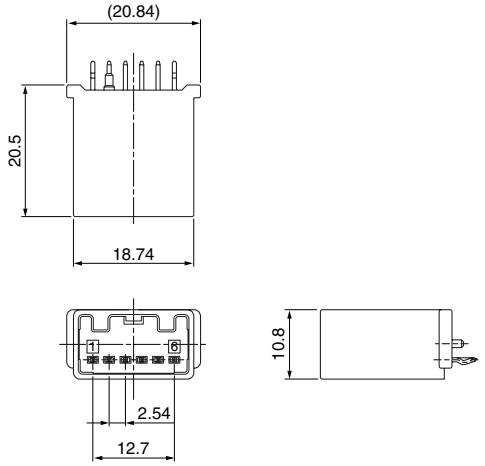

Circuits	Model No.	Q'ty/box	Housing Color
4	①**B04BA-AIT2-1AK**	108	Black
6	②**B06BA-AIT2-1AK-K**	120	Black

Material and Finish
Housing: ①Glass-filled nylon ②Glass-filled PBT Pin: Brass, tin-plated

Male connector (Side entry type)

Single row

● 2 circuits

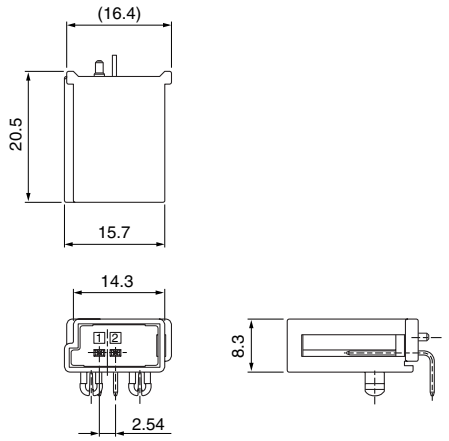

● 6 circuits

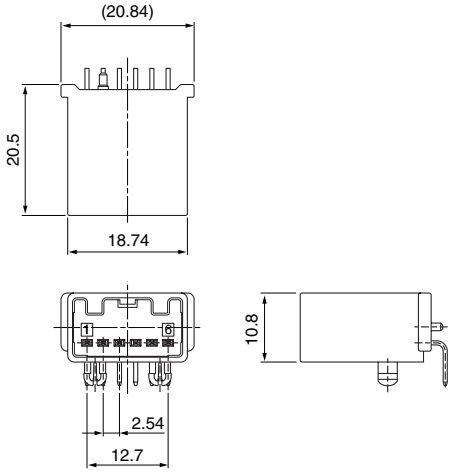

● 10 circuits

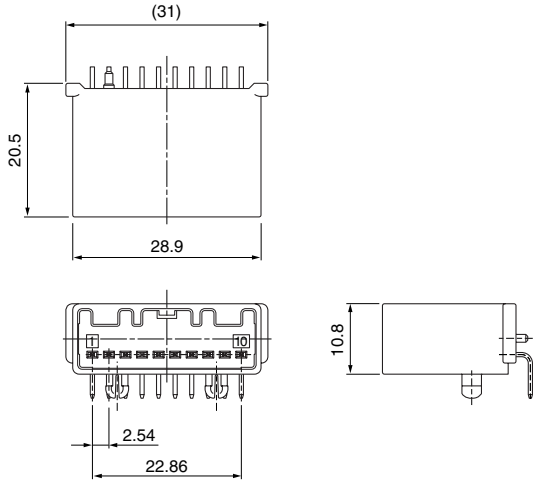

Circuits	Model No.	Q'ty/box	Housing Color
2	①**S02BA-AIT2-1AK**	96	Black
	①**S02BA-AIT2-1FS**		Natural (White)
6	①**S06B-AIT2-1AK**	80	Black
	①**S06B-AIT2-1FS**		Natural (White)
	①**S06B1-AIT2-1FS**		Natural (White)
	②**S06B1-AIT2G-1AK**		Black
10	②**S10B-AIT2G-1AK**	72	Black
	②**S10B-AIT2G-1AD**		Orange

Material and Finish
Housing: Glass-filled PBT Pin: ①Brass, tin-plated ②Brass, tin-plated, nickel-undercoated, Contact area: gold-plated

Male connector (Side entry type)

Dual row

● 10 circuits

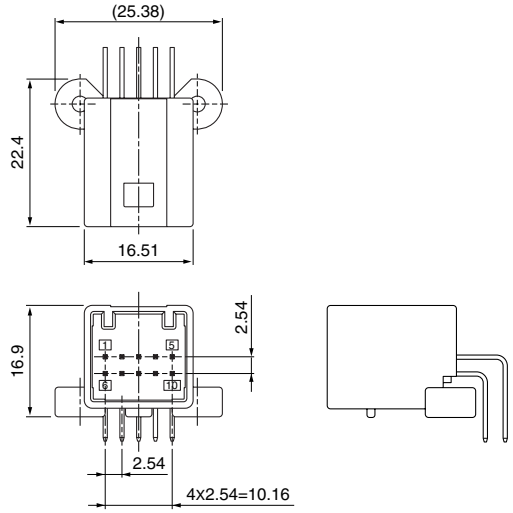

● 18 circuits

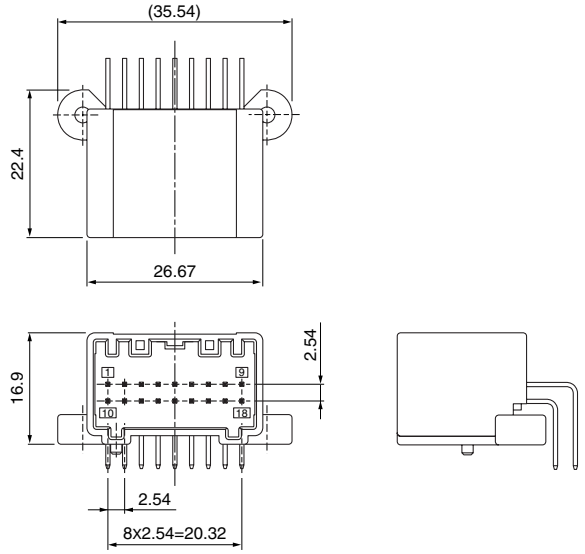

● 20 circuits

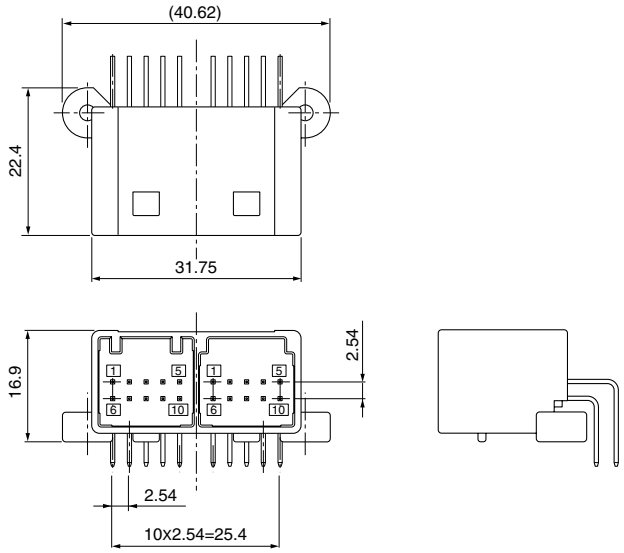

● 22 circuits

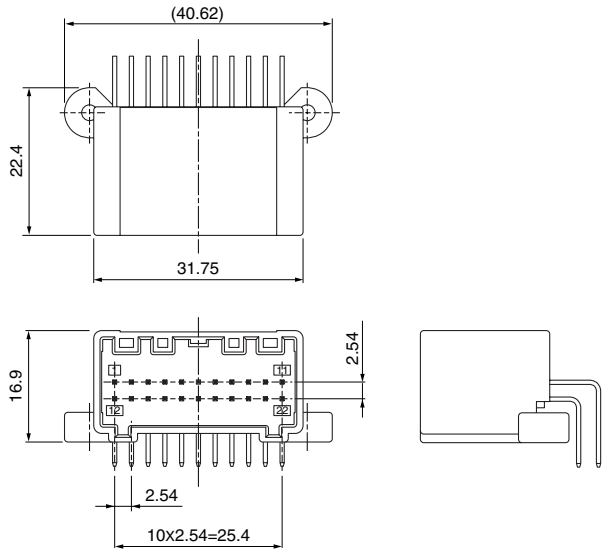

Circuits	Model No.	Q'ty/box	Housing Color
10	①**S10B-AIT2-2AK (LF)(SN)**	224	Black
	②**S10B-AIT2G-2AK**		
18	②**S18B-AIT2G-2AK**	160	Black
	②**S18B-AIT2G-2BH**		Gray
	②**S18B-AIT2G-2DM**		Green
	②**S18B-AIT2G-2FS**		Natural (White)
	②**S18B-AIT2G-2AD**		Orange
	②**S18B-AIT2G-2BD**		Orange
20	②**S20B-AIT2G-2A2BK**	128	Black
22	②**S22B-AIT2G-2AK**	128	Black
	②**S22B-AIT2G-2BH**		Gray
	②**S22B-AIT2G-2CN**		Brown
	②**S22B-AIT2G-2FS**		Natural (White)

Material and Finish
Housing: Glass-filled PBT Pin: ①Brass, tin-plated ②Brass, tin-plated, Contact area: gold-plated

Male connector (Wire-to-wire)

● 2 circuits

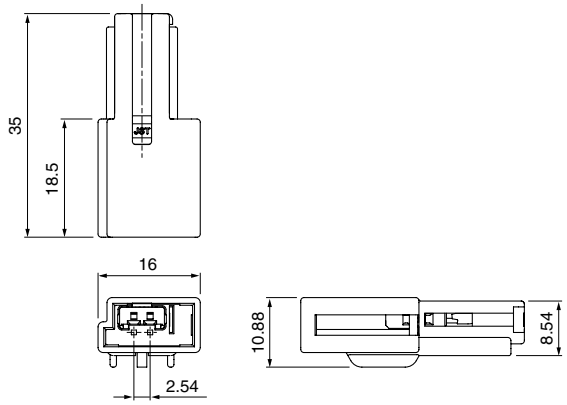

● 3 circuits

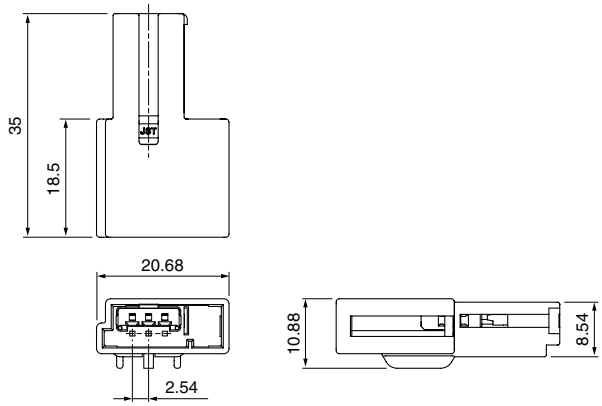

● 6 circuits

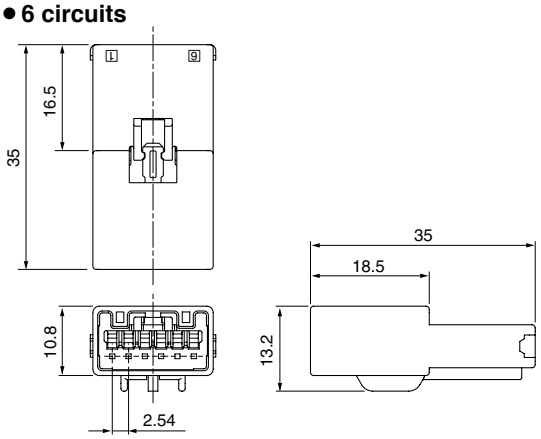

● 7 circuits

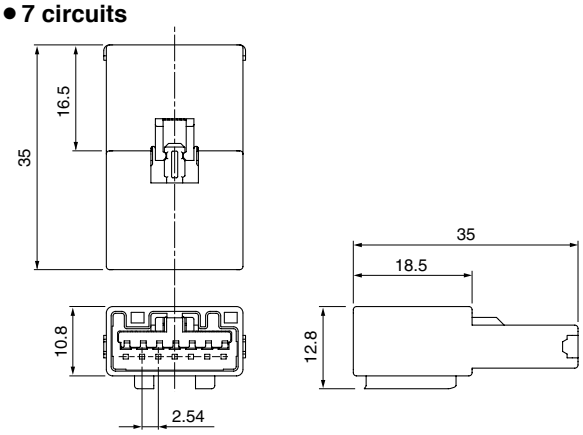

● 10 circuits (Dual row)

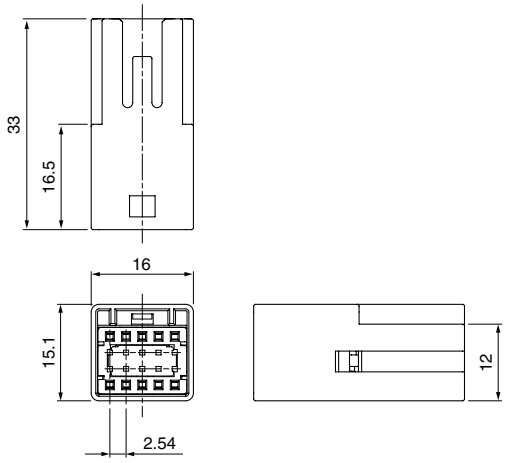

● 22 circuits (Dual row)

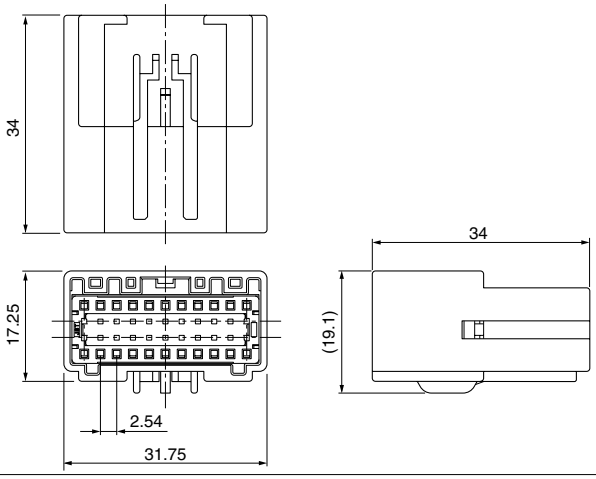

Circuits	Model No.	Q'ty/box	Housing Color	TPA Color
2	**AIT2WSB-02A-1AK**	300	Black	Red
3	**AIT2WSB-03A-1AK**	200	Black	Red
6	**AIT2WSB-06-1AK**	150	Black	Red
	AIT2WSB-06-1FS	150	Natural (White)	Red
7	**AIT2WSB-07-1FS**	150	Natural (White)	Red
	AIT2WSB-07-1FK	150	Black	Red
10	**AIT2WSB-10A-2AK**	150	Black	Natural (White)
	AIT2WSB-10A-2BH	150	Gray	Natural (White)
22	**AIT2WSB-22-2AK**	60	Black	Natural

Material
Housing: Glass-filled PBT TPA: Glass-filled PBT

PC board layout, Assembly layout

Top entry type

● 4 circuits

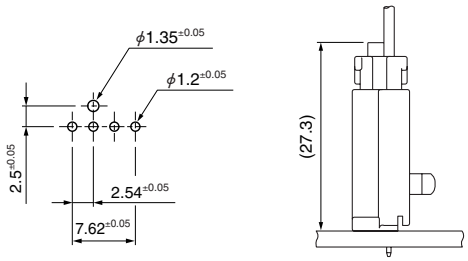

● 6 circuits

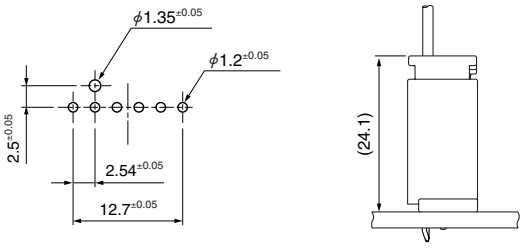

Side entry type

Single row

● 2 circuits

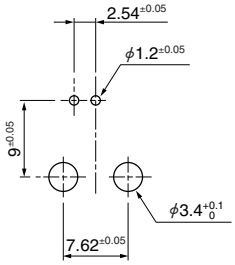

● 6 circuits

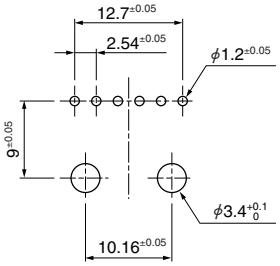

● 10 circuits

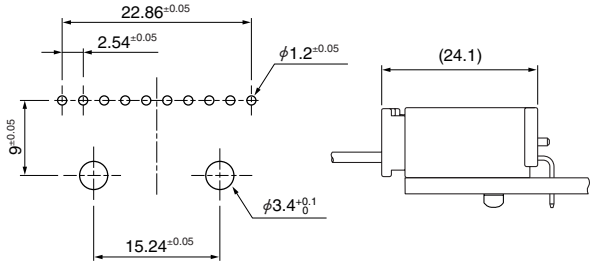

Dual row

● 10 circuits

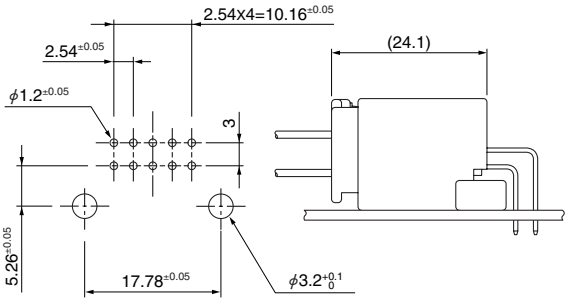

● 20 circuits

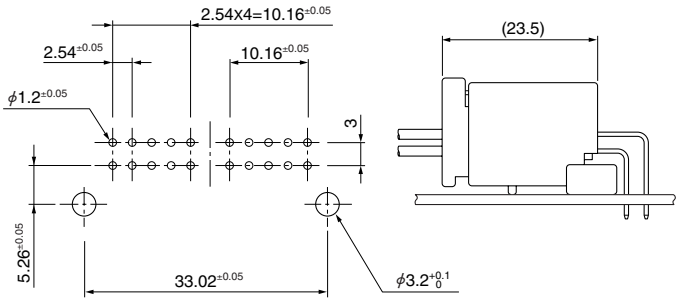

● 18 circuits

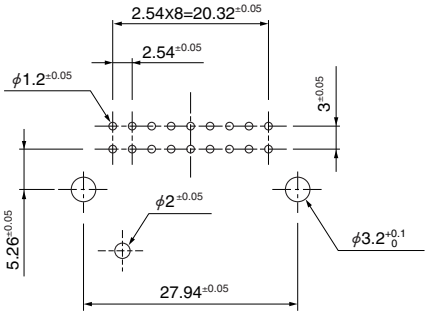

● 22 circuits

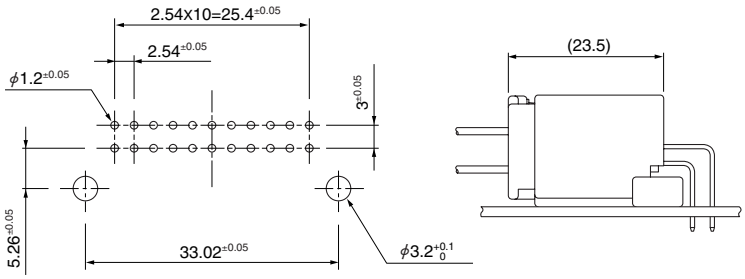

Note: 1. Tolerances are non-cumulative.
2. Hole dimensions differ according to the type of PC board and piercing method.
The dimensions above should serve as guideline. Contact JST for details.

Assembly layout

Wire-to-wire type

● **Single row**

AIT2WSB-( )-1( )

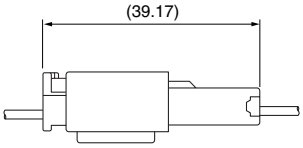

AIT2WSB-( )A-1( )

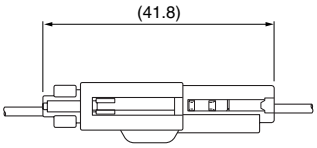

● **Dual row**

AIT2WSB-( )A-2( )

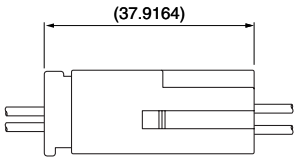

AIT2WSB-22-2AK

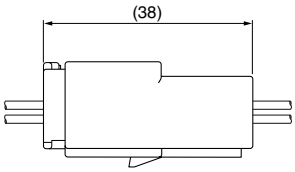

Crimping machine, Applicator

Strip terminal	Crimping machine	Crimp applicator MKS-L	
		Dies	Crimp applicator with dies
SAIT-A03( )-M064	AP-K2N	MK/SAIT-A03-064	APLMK SAIT-A03-064
SAIT-A02( )-M064		MK/SAIT-A02-064	APLMK SAIT-A02-064
SAITW-A03( )-064		MK/SAITW-A03-064	APLMK SAITW-A03-064
SAITW-A02( )-064		MK/SAITW-A02-064	APLMK SAITW-A02-064

Note: When crimping operation is conducted using an applicator and die set other than the above, JST cannot guarantee the performance of the terminal.

Mouser Electronics

Authorized Distributor

Click to View Pricing, Inventory, Delivery & Lifecycle Information:

JST:

AIT2PB-02A-1AK AIT2PB-02A-1FS AIT2PB-03B-1AK AIT2PB-04B-1AK AIT2PB-04M-1AK AIT2WSB-10A-2AK AIT2WSB-10A-2BH AIT2WSB-22-2AK AIT2PB-22-2AK AIT2WSB-02A-1AK AIT2WSB-03A-1AK AIT2WSB-06-1AK AIT2WSB-06-1FS AIT2WSB-07-1FK AIT2PB-10-1AK AIT2PB-10-1BH AIT2PB-10-1DM AIT2PB-10-1FS AIT2PB-10P-2AK AIT2PB-10P-2BH AIT2PB-06-1AK AIT2PB-06-1FS AIT2PB-07-1BH AIT2PB-07-1FS AIT2PB-10-1AD SAITW-A03T-064 SAITW-A03GF-064 S06B-AIT2-1AK S10B-AIT2G-1AK AIT2PB-18-2AK AIT2PB-18-2DM AIT2PB-04G-1AK AIT2PB-18-2BH AIT2PB-22-2FS AIT2PB-02G-1AK B04BA-AIT2-1AK AIT2PB-22-2BH

ООО «ЛайфЭлектроникс» “LifeElectronics” LLC

ИНН 7805602321 КПП 780501001 Р/С 40702810122510004610 ФАКБ "АБСОЛЮТ БАНК" (ЗАО) в г.Санкт-Петербурге К/С 30101810900000000703 БИК 044030703

Компания «Life Electronics» занимается поставками электронных компонентов импортного и отечественного производства от производителей и со складов крупных дистрибьюторов Европы, Америки и Азии.

С конца 2013 года компания активно расширяет линейку поставок компонентов по направлению коаксиальный кабель, кварцевые генераторы и конденсаторы (керамические, пленочные, электролитические), за счёт заключения дистрибьюторских договоров

Мы предлагаем:

- *Конкурентоспособные цены и скидки постоянным клиентам.*
- *Специальные условия для постоянных клиентов.*
- *Подбор аналогов.*
- *Поставку компонентов в любых объемах, удовлетворяющих вашим потребностям.*

- *Приемлемые сроки поставки, возможна ускоренная поставка.*
- *Доставку товара в любую точку России и стран СНГ.*
- *Комплексную поставку.*
- *Работу по проектам и поставку образцов.*
- *Формирование склада под заказчика.*

- *Сертификаты соответствия на поставляемую продукцию (по желанию клиента).*
- *Тестирование поставляемой продукции.*
- *Поставку компонентов, требующих военную и космическую приемку.*
- *Входной контроль качества.*
- *Наличие сертификата ISO.*

В составе нашей компании организован Конструкторский отдел, призванный помогать разработчикам, и инженерам.

Конструкторский отдел помогает осуществить:

- *Регистрацию проекта у производителя компонентов.*
- *Техническую поддержку проекта.*
- *Защиту от снятия компонента с производства.*
- *Оценку стоимости проекта по компонентам.*
- *Изготовление тестовой платы монтаж и пусконаладочные работы.*

Тел: +7 (812) 336 43 04 (многоканальный)
Email: org@lifeelectronics.ru

www.lifeelectronics.ru