Sensors and Switches

SENSING AND CONTROL

Product Catalog

Honeywell

SENSORS AND SWITCHES

Honeywell offers a wide selection of products and technology capability for applications in medical devices and equipment; heating, ventilation, air-conditioning and refrigeration; information technology; home appliances; motor control and automotive passenger cars. This catalogue contains a selection of our most popular, established product listings. To view our complete range of products, visit our web site at ***www.honeywell.com/sensing.***

How to use this catalogue

For each referenced listing, key specification parameters, descriptions and mounting drawing information are presented. These listings illustrate our capabilities while the specifications included allow easy differentiation between similar products. For products with no specific reference numbers, please contact your local Honeywell sales office.

There are, of course, many more product options available. Full product specification information may be accessed on our web site (***www.honeywell.com/sensing***). At the Home page enter the catalogue listing reference in the SEARCH box and click GO! This will take you directly to the interactive catalogue/specification search tables for this listing. Alternatively, select and click the interactive catalogue icon on the Home page and then choose a product category against which to do a specification search.

Also on the web site you can access installation instructions, application notes, Frequently Asked Questions (FAQs), selection guides and additional technical information.

Mounting dimensions

Mounting dimensions shown in each product section are for reference only. For exacting layout work, request an engineering drawing from your nearest Honeywell sales office. Where dual dimensions are shown on mounting drawings, the first or upper one is millimetres (mm) and the second or lower is inches (in). Where single dimensions are shown, they are millimetres (mm), unless otherwise stated.

To order these products

Simply contact your local Honeywell Distributor or your local Honeywell office. More information on Honeywell products and how to contact us can be found at ***http://locator.micro.honeywell.com/***

CHECK THIS OUT!

Interactive Catalog

www.honeywell.com/sensing

Honeywell – delivering excellence

To assist in delivering the right products for our customers' applications, we listen to them to understand their needs. Using techniques such as "Voice of the Customer" and "Concept Engineering," we aim to deliver the products and solutions. As part of Honeywell we can use local knowledge and understanding combined with global expertise and resources to achieve this. We can deploy many key technologies to bring innovative solutions to customers' problems.

Our products are manufactured to work well and to last. We use Six Sigma Plus productivity to ensure this is the case. We have award winning manufacturing facilities around the world and recognised world class business excellence in manufacturing and supply chain management to deliver on time, anywhere in the world.

Our e-business approach offers instant access to product information, technical support and application knowledge through our Internet site. Check out our powerful new interactive catalogue that can search and find the right products for customers' needs and deliver a drawing ready for incorporation in a CAD system direct to your desk.

And of course, we manage our whole business for the benefit of our customers, using an acknowledged world-class business excellence approach that incorporates Six Sigma principles.

© 2005 Honeywell International Inc. All rights reserved.

CONTENTS

Pressure Sensors — Page 4
Absolute, differential, gage and vacuum gage pressure sensors for media that are compatible with a silicon diaphragm. These sensors are often ideal for low-cost, commercial-grade applications such as printed circuit boards. Small and reliable, they aim to offer excellent repeatability and high accuracy under varying environmental conditions.

Mass Airflow Sensors — Page 13
Amplified and unamplified microbridge mass airflow sensors aim at providing a sensitive, fast response and high accuracy over a broad range of gas and air flows.

Force Sensors — Page 16
Compact, extremely sensitive devices for precise, reliable performance in many applications that requires precision force measurement.

Humidity Sensors — Page 18
Relative humidity sensors with on-chip signal conditioning. Chemically resistant packaging to accommodate many harsh environments. Sensor construction consists of a planar capacitor with a second polymer layer to protect against dirt, dust, oils and other hazards.

Temperature Sensors - RTDs — Page 19
Platinum and silicon-based thin film resistance temperature devices (RTDs) for appropriate applications requiring small package size, accuracy and linear outputs.

Temperature Sensors - Thermistors — Page 21
Precision Hi-Rel negative temperature coefficient (NTC) thermistors and positive temperature coefficient (PTC) thermistors for use in a broad variety of temperature measurement and control applications.

Temperature Sensors - Probes — Page 27
A variety of customized probes for use in the automotive and other industries.

Thermal Cutoffs — Page 30
Dependable organic thermal cutoffs in temperatures ranging from 72 °C to 240 °C [162 °F to 464 °F]. They are available in various lead lengths and configurations.

Thermostats Redi-Temp® — Page 32
Redi-Temp® is a line of standard thermostats offered in a range of pre-set temperatures. These standard products are available for immediate delivery. They are often useful for low-volume applications where standard configurations are acceptable.

⚠ WARNING

MISUSE OF DOCUMENTATION

- The information presented in this catalogue is for reference only. DO NOT USE this document as product installation information.
- Complete installation, operation and maintenance information is provided in the instructions supplied with each product.

Failure to comply with these instructions could result in death or serious injury.

Thermostats - Commercial — Page 34
Dependable bi-metal thermostats include a choice of automatic or manual reset, phenolic or ceramic housings and a variety of mounting brackets and terminal options.

Thermostats - Precision — Page 42
Hermetic and non-hermetic thermostats in standard and custom packages for use in a wide variety of precision applications.

Thermostats - High Reliability — Page 63
Meet the stringent requirements of military and aerospace industries for dielectric strength, moisture resistance, vibration, shock and hermetic seal. These products meet all domestic and international approvals, as well as appropriate military specifications.

Combi-sensor — Page 65
Liquid pressure/temperature sensor that uses piezoresistive and thermistor sensing technology to measure water pressure and temperature.

Heaters — Page 66
Wire-wound, chemically-etched, high temperature and transparent heaters in a variety of sizes and geometries.

Magnetic Position Sensors — Page 68
Hall effect and magnetoresistive sensors for many applications that require accurate, reliable outputs.

Infrared Products — Page 74
Optoelectronic standard infrared emitting diodes (IREDs), sensors and assemblies for object presence, limit and motion sensing, position encoding and movement encoding.

Current Sensors — Page 81
Adjustable linear null balance, digital and linear output current sensors for monitoring ac or dc current.

Liquid Level Sensors — Page 87
Sensitive sensors in a variety of housing types for detecting the presence or absence of a wide range of liquids.

Basic Switches — Page 89
Standard, miniature and subminiature switches available in a range of enclosures and with a variety of actuators. They are often ideal for use alone or built into assemblies.

Turbidity Sensors — Page 99
Turbidity sensing aims to provide a quick, practical indication of the relative amount of solids suspended in water or liquids.

⚠ WARNING

PERSONAL INJURY

DO NOT USE these products as safety or emergency stop devices, or in any other application where failure of the product could result in personal injury

Failure to comply with these instructions could result in death or serious injury.

Pressure Sensors

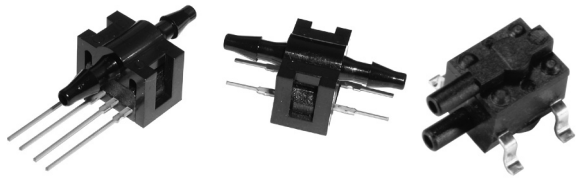

Honeywell pressure sensors are small, low cost and reliable. They promote excellent repeatability, high accuracy and reliability under varying environmental conditions. In addition, they feature highly consistent operating characteristics from one sensor to the next and interchangeability without recalibration.

We offer three pressure sensor measurement types—absolute, differential and gage—including vacuum gage and bidirectional types. A wide variety of pressure ranges, along with both amplified and unamplified versions, are available.

Honeywell pressure sensors are best used in applications which require precision pressure measurement.

24PC/26PC Series

Signal conditioning: Unamplified noncompensated (24PC Series)
Compensated (26PC Series)
Supply voltage: 10 Vdc typ.
12 Vdc max. (24PC Series)
16 Vdc max. (26PC Series)
Operating temperature: -40 °C to 85 °C [-40 °F to 185 °F]
Port style: Straight or flow through
Termination: PCB; 1 x 4; 0.600 in (Type 6)
PCB; 2 x 2; (Type 2)
1 x 4 with connector (Type 5)

OPTIONS

Differential

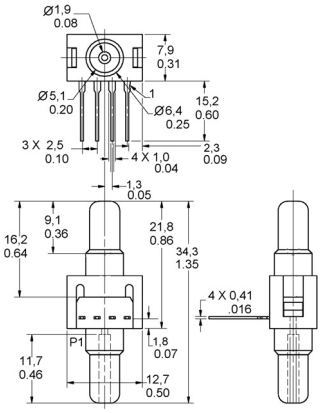

Gage

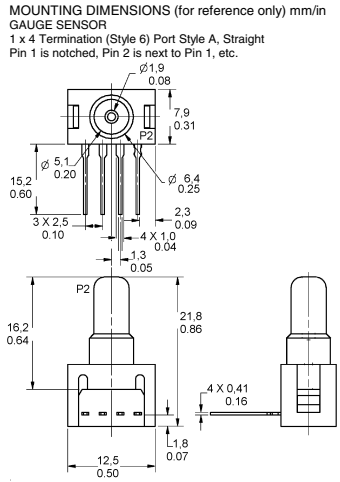

24PC Series

MEASUREMENT TYPE	PRESSURE RANGE	REFERENCE
Gage/vacuum gage	1.0 psi	24PCAFA6G
Differential/vacuum gage	5.0 psi	24PCBFA6D
Gage/vacuum gage	5.0 psi	24PCBFA6G
Differential/vacuum gage	15.0 psi	24PCCFA6D
Gage/vacuum gage	15.0 psi	24PCCFA6G
Differential/vacuum gage	30.0 psi	24PCDFA6D
Gage/vacuum gage	30.0 psi	24PCDFA6G
Differential	0.5 psi	24PCEFA6D
Gage	0.5 psi	24PCEFA6G
Differential	100 psi	24PCFFA6D
Gage	100 psi	24PCFFA6G

26PC Series

MEASUREMENT TYPE	PRESSURE RANGE	REFERENCE
Differential/vacuum gage	1.0 psi	26PCAFA6D
Gage/vacuum gage	1.0 psi	26PCAFA6G
Differential	5.0 psi	26PCBFA6D
Gage	5.0 psi	26PCBFA6G
Differential/vacuum gage	15.0 psi	26PCCFA6D
Gage/vacuum gage	15.0 psi	26PCCFA6G
Differential	30.0 psi	26PCDFA6D
Gage	30.0 psi	26PCDFA6G
Gage	100 psi	26PCFFA6G
Differential	250 psi	26PCGFA6D

Flow through

Type 6

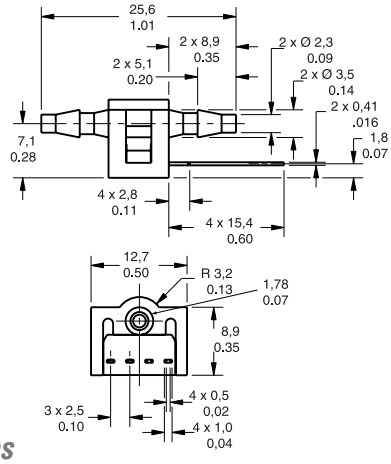

24PC Series

MEASUREMENT TYPE	PRESSURE RANGE	REFERENCE
Flow through/vacuum gage	15.0 psi	24PCCFG6G
Flow through/vacuum gage	30.0 psi	24PCDFG6G

26PC Series

MEASUREMENT TYPE	PRESSURE RANGE	REFERENCE
Flow through/vacuum gage	1.0 psi	26PCAFG6G
Flow through	15.0 psi	26PCCFG6G
Gage/vacuum gage	100 psi	26PCFFG6G

24PC/26PC Series (continued)

Type 2

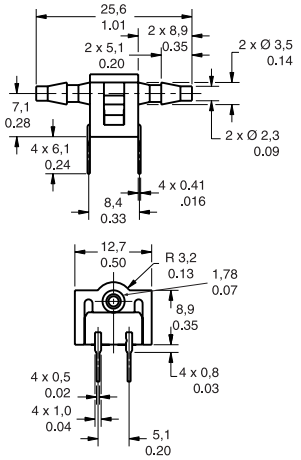

26PC Series

MEASUREMENT TYPE	PRESSURE RANGE	REFERENCE
Flow through	30.0 psi	26PCDFG2G

Type 5

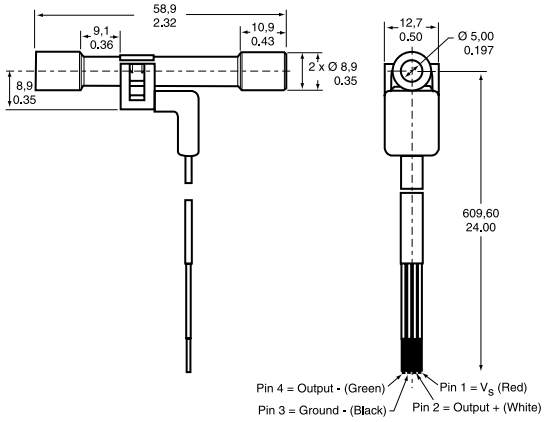

26PC Series

MEASUREMENT TYPE	PRESSURE RANGE	REFERENCE
Flow through/vacuum gage	100 psi	26PCFFU5G

24PC/26PC SMT (Surface-Mount Technology)

Signal conditioning: Unamplified noncompensated (24PC SMT Series)
Compensated (26PC SMT Series)
Supply voltage: 10 Vdc typ.
12 Vdc max. (24PC SMT Series)
16 Vdc max. (26PC SMT Series)
Operating temperature: -40 °C to 85 °C [-40 °F to 185 °F]
Port style: Straight, Ø 1,88 mm [0.74 in]
Termination: SMT solder
Measurement type: Gage, vacuum gage, differential, wet/wet differential

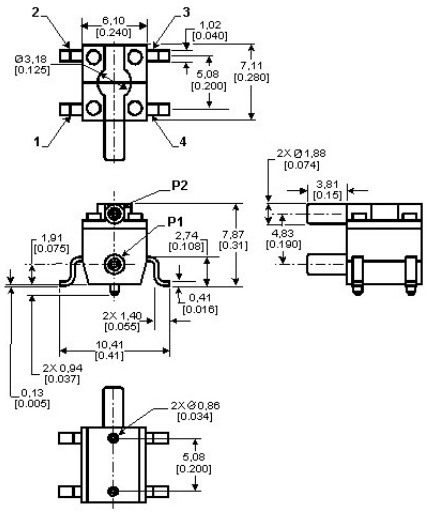

OPTIONS

24PC SMT Series

PRESSURE RANGE	REFERENCE
0 psi to 1.0 psi	24PC01SMT
0 psi to 5.0 psi	24PC05SMT
0 psi to 15.0 psi	24PC15SMT

26PC SMT Series

PRESSURE RANGE	REFERENCE
0 psi to 1.0 psi	26PC01SMT
0 psi to 5.0 psi	26PC05SMT
0 psi to 15.0 psi	26PC15SMT

CPC/CPX Series, Low Pressure

Signal conditioning: Unamplified
Compensated (CPC Series)
Noncompensated (CPX Series)
Supply voltage: 12 Vdc typ., 16 Vdc max.
Operating temperature: -25 °C to 85 °C [-13 °F to 185 °F]
Port style: Barbed
Termination: PCB
Accuracy grade: Commercial (1.0 %)

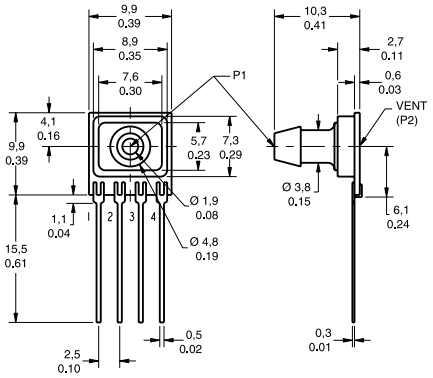

CPC/CPX Series, Low Pressure (continued)

OPTIONS

CPC Series

MEASUREMENT TYPE	PRESSURE RANGE	REFERENCE
Differential	1.0 psi [4.0 in H_2O]	CPCL04DFC
Gage	1.0 psi [4.0 in H_2O]	CPCL04GFC
Differential	1.0 psi [10.0 in H_2O]	CPCL10DFC

CPX Series

MEASUREMENT TYPE	PRESSURE RANGE	REFERENCE
Differential	4.0 in H_2O	CPXL04DF
Differential	10.0 in H_2O	CPCL10DF

DC Series, Low Pressure

Signal conditioning: Amplified compensated
Unregulated (DC001NDC4)
Regulated (DC005NDR4)
Supply voltage: 5 Vdc typ., 5.1 Vdc max. (DC001NDC4)
7 Vdc to 35 Vdc (DC005NDR4)
Operating temperature: -25 °C to 85 °C [-13 °F to 185 °F]
Port style: Barbed
Termination: PCB

OPTIONS

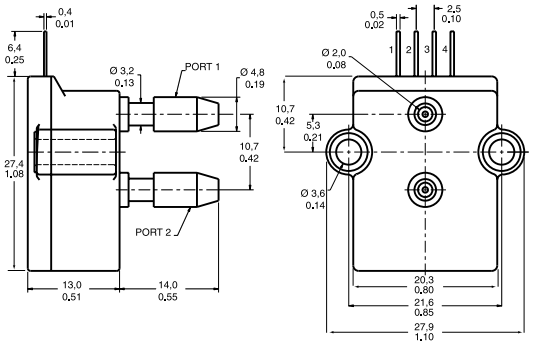

DC001NDC4

MEASUREMENT TYPE	PRESSURE RANGE	REFERENCE
Differential	1.0 in H_2O	DC001NDC4

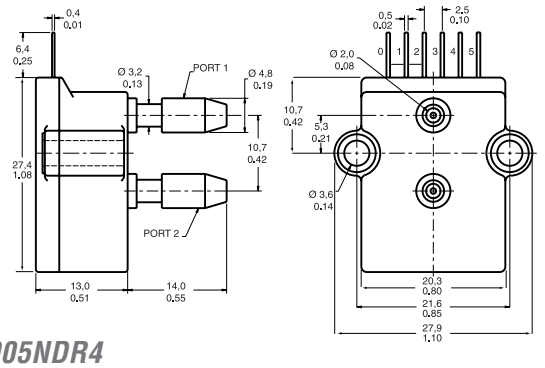

DC005NDR4

MEASUREMENT TYPE	PRESSURE RANGE	REFERENCE
Differential	5.0 in H_2O	DC005NDR4

DCXL/DUXL Series, Low Pressure

Signal conditioning: Unamplified
Compensated (DCXL)
Noncompensated (DUXL)
Supply voltage: 12 Vdc typ., 16 Vdc max. (DCXL)
4.5 Vdc min., 8 Vdc max. (DUXL)
Operating temperature: -25 °C to 85 °C [-13 °F to 185 °F]
Port style: Barbed
Termination: PCB

OPTIONS

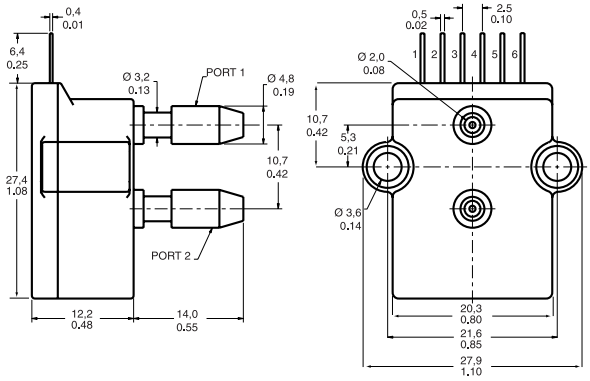

DCXL Series

MEASUREMENT TYPE	PRESSURE RANGE	REFERENCE
Differential	1.0 in H_2O	DCXL01DN
Differential	10.0 in H_2O	DCXL10DN

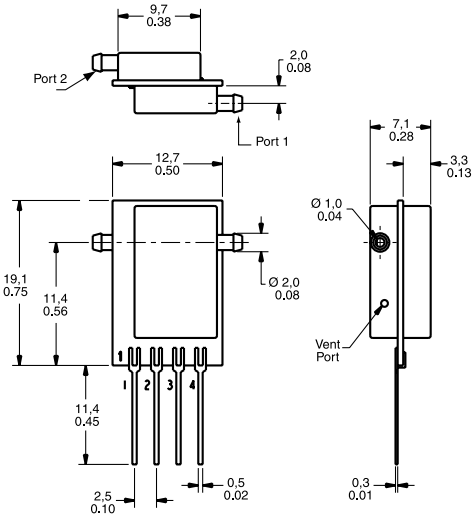

DUXL Series

MEASUREMENT TYPE	PRESSURE RANGE	REFERENCE
Differential	1.0 in H_2O	DUXL01D
Differential	10.0 in H_2O	DUXL10D

XCA Series

Signal conditioning: Amplified compensated
Supply voltage: 5 Vdc typ., 16 Vdc max.
Operating temperature: -25 °C to 85 °C [-13 °F to 185 °F]
Port style: Barbed
Termination: PCB

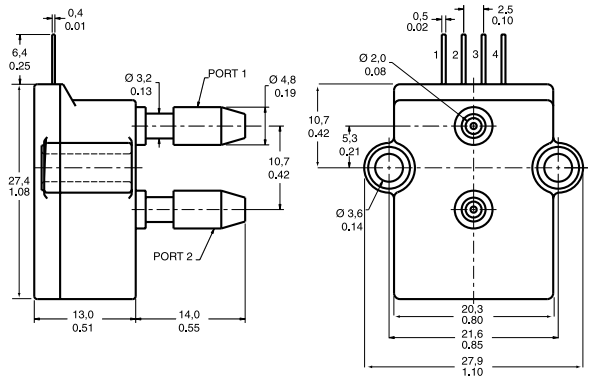

MEASUREMENT TYPE	PRESSURE RANGE	REFERENCE
Absolute	15.0 psia	XCA415AN

XCX Series

Signal conditioning: Unamplified compensated
Supply voltage: 12 Vdc typ., 16 Vdc max.
Operating temperature: -25 °C to 85 °C [-13 °F to 185 °F]
Port style: Barbed
Termination: PCB
Accuracy grade: Commercial (1.0 %)

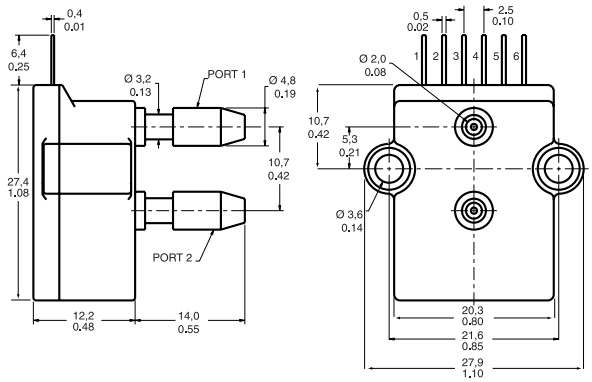

MEASUREMENT TYPE	PRESSURE RANGE	ACCURACY GRADE	REFERENCE
Differential	1.0 psi		XCX01DNC
Differential	1.0 psi	High (0.50 %)	XCX01DNH
Differential	15.0 psi		XCX15DNC

XPC Series

Signal conditioning: Unamplified compensated
Supply voltage: 12 Vdc typ., 16 Vdc max.
Operating temperature: -25 °C to 85 °C [-13 °F to 185 °F]
Port style: Barbed
Termination: PCB
Accuracy grade: Commercial (1.0 %)

DF Housing

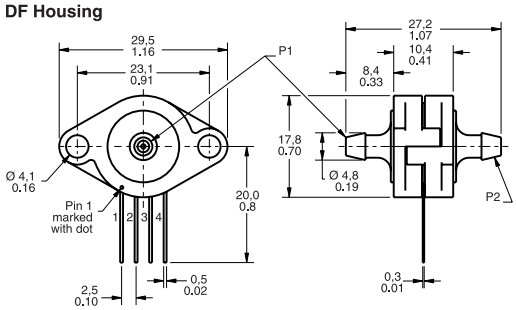

DT Housing

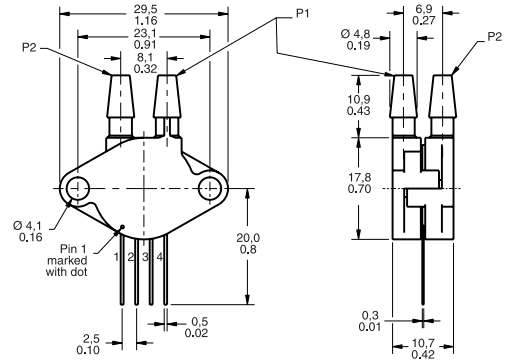

MEASUREMENT TYPE	PRESSURE RANGE	PORT STYLE	REFERENCE
Differential	1.0 psi	Axial	XPC01DFC
Differential	15.0 psi	Radial	XPC15DTC

XSX Series, Low Pressure

Signal conditioning: Unamplified uncompensated
Supply voltage: 12 Vdc typ., 16 Vdc max.
Operating temperature: -25 °C to 85 °C [-13 °F to 185 °F]
Port style: Button
Termination: PCB
Accuracy grade: Commercial (1.0 %)

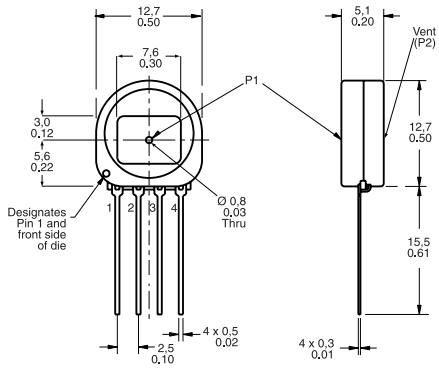

MEASUREMENT TYPE	PRESSURE RANGE	REFERENCE
Gage	4.0 in H_2O	XSXL04GF

ASDX Series

Signal conditioning: Amplified compensated
Supply voltage: 4.75 Vdc to 5.25 Vdc
Operating temperature: -20 °C to 105 °C [-4 °F to 221 °F]
Port style: Taper 2,29 mm [0.090 in]
Termination: PCB
Accuracy grade: ±2.0 %

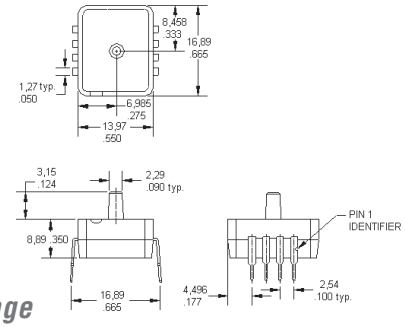

A2 package

MEASUREMENT TYPE	PRESSURE RANGE	REFERENCE
Absolute	0 psi to 15 psi	ASDX015A24R
Absolute	0 psi to 30 psi	ASDX030A24R
Absolute	0 psi to 100 psi	ASDX100A24R

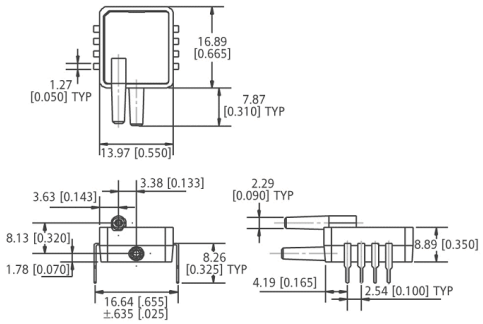

D4 package

MEASUREMENT TYPE	PRESSURE RANGE	REFERENCE
Differential/gage	0 psi to 1 psi	ASDX001D44R
Differential/gage	0 psi to 5 psi	ASDX005D44R
Differential/gage	0 psi to 15 psi	ASDX015D44R
Differential/gage	0 psi to 30 psi	ASDX030D44R
Differential/gage	0 psi to 100 psi	ASDX100D44R

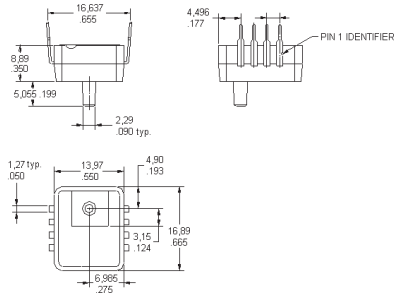

G2 package

MEASUREMENT TYPE	PRESSURE RANGE	REFERENCE
Gage	0 psi to 1 psi	ASDX001G24R
Gage	0 psi to 5 psi	ASDX005G24R
Gage	0 psi to 15 psi	ASDX015G24R
Gage	0 psi to 30 psi	ASDX030G24R
Gage	0 psi to 100 psi	ASDX100G24R

ASDX DO (Digital Output) Series

Signal conditioning: Amplified
Supply voltage: 4.75 Vdc to 5.25 Vdc
Operating temperature: -20 °C to 105 °C [-4 °F to 221 °F]
Port style: Taper 2,29 mm [0.090 in]
Termination: PCB
Accuracy grade: ±2.0 %

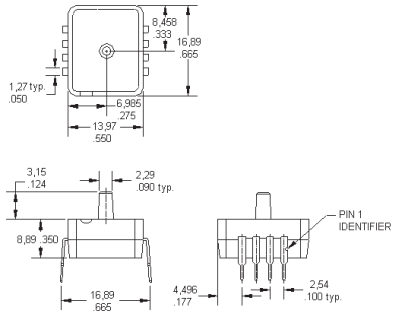

A2 package

MEASUREMENT TYPE	PRESSURE RANGE	REFERENCE
Absolute	0 psi to 15 psi	ASDX015A24R-DO
Absolute	0 psi to 30 psi	ASDX030A24R-DO
Absolute	0 psi to 100 psi	ASDX100A24R-DO

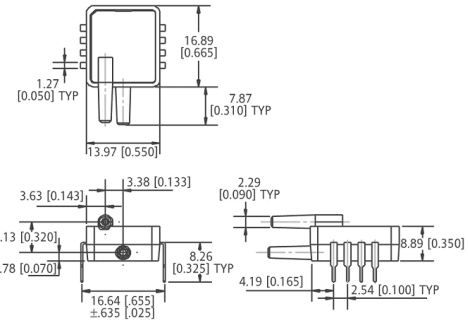

D4 package

MEASUREMENT TYPE	PRESSURE RANGE	REFERENCE
Differential/gage	0 psi to 1 psi	ASDX001D44R-DO
Differential/gage	0 psi to 1 psi	ASDX001D44D-DO
Differential/gage	0 psi to 5 psi	ASDX005D44R-DO
Differential/gage	0 psi to 5 psi	ASDX005D44D-DO
Differential/gage	0 psi to 15 psi	ASDX015D44R-DO
Differential/gage	0 psi to 15 psi	ASDX015D44D-DO
Differential/gage	0 psi to 30 psi	ASDX030D44R-DO
Differential/gage	0 psi to 30 psi	ASDX030D44D-DO
Differential/gage	0 psi to 100 psi	ASDX100D44R-DO

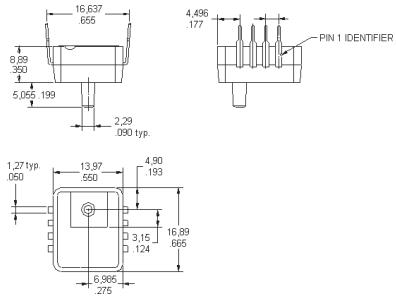

G2 package

MEASUREMENT TYPE	PRESSURE RANGE	REFERENCE
Gage	0 psi to 1 psi	ASDX001G24R-DO
Gage	0 psi to 5 psi	ASDX005G24R-DO
Gage	0 psi to 15 psi	ASDX015G24R-DO
Gage	0 psi to 30 psi	ASDX030G24R-DO
Gage	0 psi to 100 psi	ASDX100G24R-DO

ASDXL Series

Signal conditioning: Amplified
Output signal: 0.5 Vdc to 4.5 Vdc
Operating temperature: Compensated 0 °C to 85 °C [32 °F to 185 °F]
Port style: Taper 2,29 mm [0.090 in]
Termination: PCB
Accuracy grade: 2.0 %

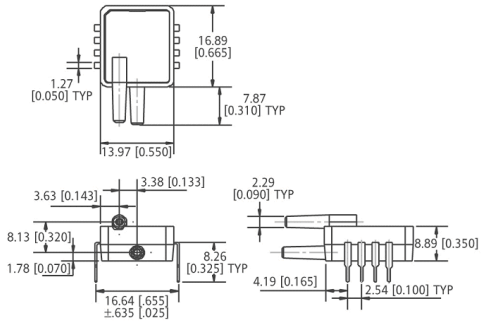

D4 package

MEASUREMENT TYPE	PRESSURE RANGE	REFERENCE
Bidirectional	±5 in H_2O	ASDXL005D44D
Bidirectional	0 in to 10 in H_2O	ASDXL010D44D
Differential	0 in to 10 in H_2O	ASDXL010D44R

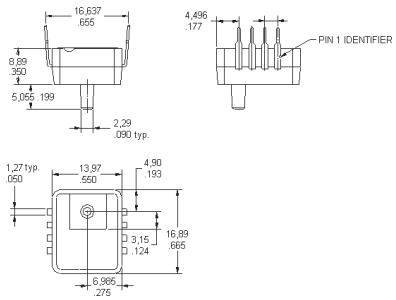

G2 package

MEASUREMENT TYPE	PRESSURE RANGE	REFERENCE
Gage	0 in to 10 in H_2O	ASDXL010G24R

ASDXL DO (Digital Output) Series

Signal conditioning: Amplified
Output signal: HEX E25 to EA8
Operating temperature: Compensated 0 °C to 85 °C [32 °F to 185 °F]
Port style: Taper 2,29 mm [0.090 in]
Termination: PCB
Accuracy grade: 2.0 %

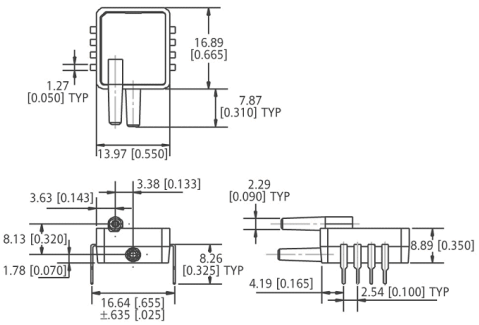

D4 package

MEASUREMENT TYPE	PRESSURE RANGE	REFERENCE
Bidirectional	±5 in H_2O	ASDXL005D44D-DO
Bidirectional	±10 in H_2O	ASDXL010D44D-DO
Differential	0 in to 10 in H_2O	ASDXL010D44R-DO

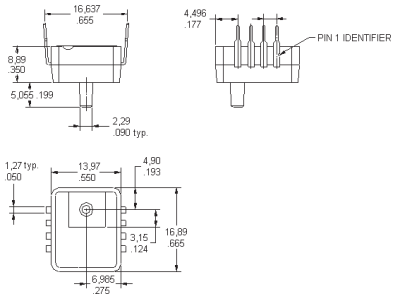

G2 package

MEASUREMENT TYPE	PRESSURE RANGE	REFERENCE
Gage	0 in to 10 in H_2O	ASDXL010G25R-DO

140PC Series

Signal conditioning: Amplified
Supply voltage: 8 Vdc typ., 16 Vdc max.
Operating temperature: -40 °C to 85 °C [-40 °F to 185 °F]
Port style: Straight
Termination: PCB

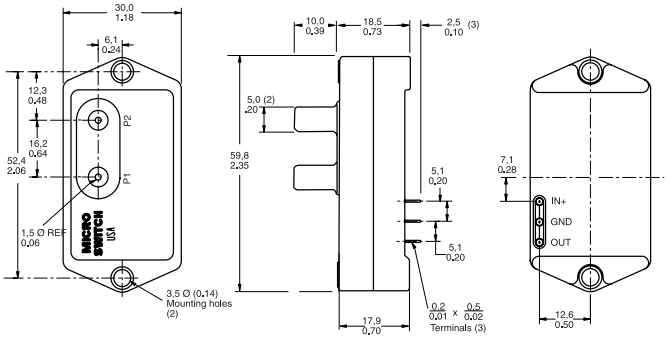

Note: *Dimensions shown apply to Differential and Absolute versions. Gage units are identical, except the P1 port is absent.*

MEASUREMENT TYPE	PRESSURE RANGE	TERMINATION	REFERENCE
Gage/vacuum gage	15 psi		141PC15G
Differential/vacuum gage	1.0 psi		142PC01D
Gage	1.0 psi		142PC01G
Gage	2.0 psi		142PC02G
Differential/vacuum gage	5.0 psi		142PC05D
Differential/vacuum gage	-39 in H_2O to 55 in H_2O		142PC05D97
Gage	5.0 psi		142PC05G
Absolute	15 psia		142PC15A
Absolute	15 psia	Leadwire	142PC15AW95
Gage	15 psi		142PC15G
Differential/vacuum gage	±2.5 psi		143PC03D
Differential/vacuum gage	±5.0 psi	Leadwire	143PC05DW

160PC Series, Low Pressure

Signal conditioning: Amplified
Supply voltage: 8 Vdc typ., 16 Vdc max.
Operating temperature: -40 °C to 85 °C [-40 °F to 185 °F]
Port style: Straight
Termination: PCB

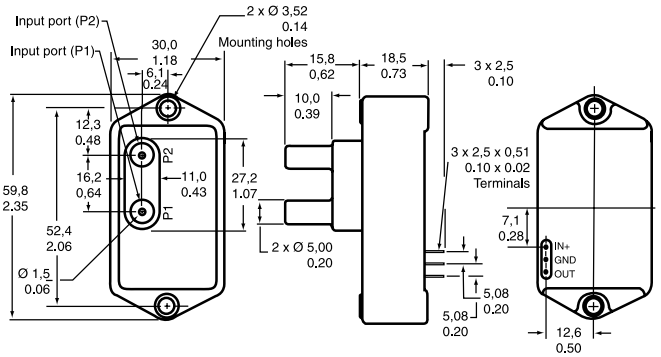

Note: *Dimensions shown apply to Differential and Absolute versions. Gage units are identical, except the P1 port is absent.*

MEASUREMENT TYPE	PRESSURE RANGE	SUPPLY VOLTAGE	REFERENCE
Differential/vacuum gage	0 in to 27.68 in H_2O		162PC01D
Differential/vacuum gage	±5.0 in H_2O		163PC01D36
Differential/vacuum gage	-20 cm to 120 cm H_2O		163PC01D48
Differential/vacuum gage	-20 cm to 120 cm H_2O	5 Vdc	163PC01D61
Differential/vacuum gage	±2.5 in H_2O		163PC01D75
Differential/vacuum gage	10.0 in H_2O		164PC01D37
Differential/vacuum gage	5.0 in H_2O		164PC01D76

SDX Series

Signal conditioning: Calibrated zero and span
Supply voltage: 20 Vdc
Operating temperature: Calibrated 0 °C to 50 °C [32 °F to 122 °F]
Port style: Straight
Termination: PCB

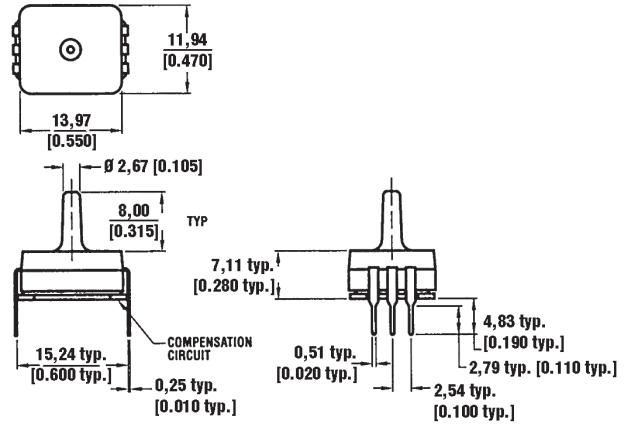

A2/G2 package

MEASUREMENT TYPE	PRESSURE RANGE	REFERENCE
Gage	0 psi to 5 psi	SDX05G2
Absolute	0 psi to 15 psi	SDX15A2

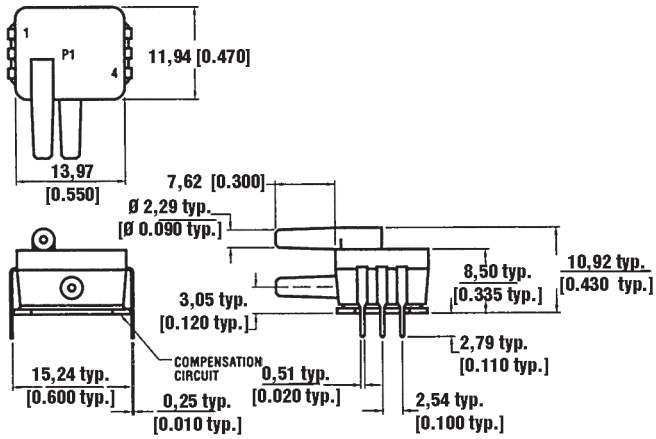

D4 package

MEASUREMENT TYPE	PRESSURE RANGE	REFERENCE
Differential	0 psi to 1 psi	SDX01D4
Differential	0 psi to 5 psi	SDX05D4
Differential	0 psi to 15 psi	SDX15D4-A

SDX IND Series

Signal conditioning: Calibrated zero and span
Supply voltage: 20 Vdc
Operating temperature: Calibrated 0 °C to 50 °C [32 °F to 122 °F]
Port style: Straight
Termination: PCB

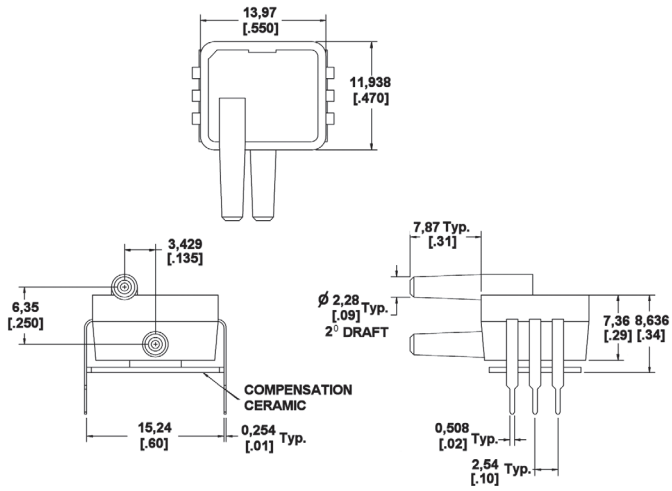

MEASUREMENT TYPE	PRESSURE RANGE	REFERENCE
Differential	0 in H_2O to 5 in H_2O	SDX005IND4
Differential	0 in H_2O to 10 in H_2O	SDX010IND4

HPX Series

Signal conditioning: None
Supply voltage: 3 Vdc typ., 10 Vdc max.
Operating temperature: -20 °C to 100 °C [-4 °F to 212 °F]
Termination: PCB

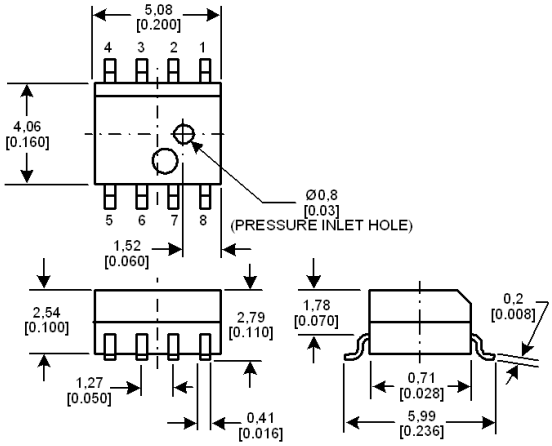

SOIC package

MEASUREMENT TYPE	PRESSURE RANGE	REFERENCE
Absolute	0 psi to 15 psi	HPX015AS
Absolute	0 psi to 30 psi	HPX030AS
Absolute	0 psi to 50 psi	HPX050AS
Absolute	0 psi to 100 psi	HPX100AS

40PC Series, Miniature Signal Conditioned

Signal conditioning: Amplified
Supply voltage: 5 Vdc ±0.25 Vdc
Operating temperature: -45 °C to 125 °C [-49 °F to 257 °F]
Port style: Straight for O-ring interface
Termination: PCB, unformed

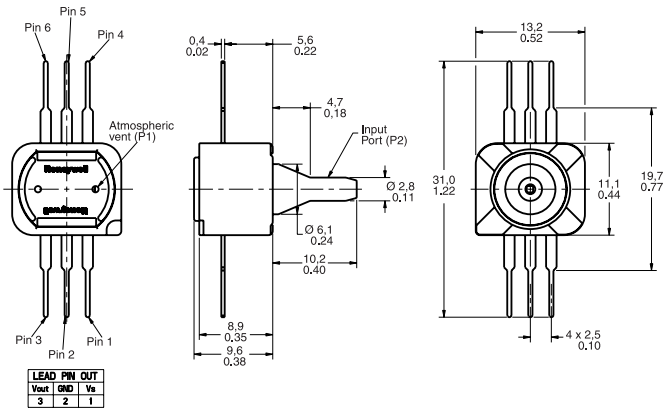

MEASUREMENT TYPE	PRESSURE RANGE	REFERENCE
Bi-directional gage/vacuum gage	±50 mm Hg	40PC001B1A
Gage	0 to 300 mm HG	40PC006G1A
Vacuum	0 to -15.0 psi	40PC015V1A
Gage	15.0 psi	40PC015G1A
Gage	30.0 psi	40PC030G1A
Gage	100 psi	40PC100G1A
Gage	150 psi	40PC150G1A
Gage	250 psi	40PC250G1A
Gage	500 psi	40PC500G1A

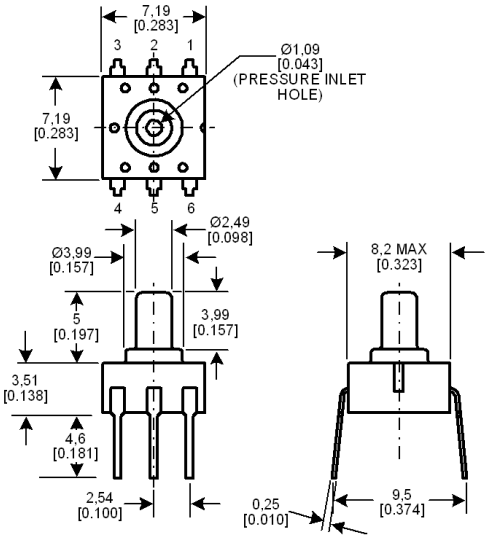

DIP package

MEASUREMENT TYPE	PRESSURE RANGE	REFERENCE
Gage	0 psi to 5.8 psi	HPX005GD
Gage	0 psi to 15 psi	HPX015GD
Gage	0 psi to 30 psi	HPX030GD
Gage	0 psi to 50 psi	HPX050GD
Gage	0 psi to 100 psi	HPX100GD

HSD Series

Signal conditioning: Amplified
Supply voltage: 3.0 Vdc ±0.01 Vdc
Operating temperature: -20 °C to 105 °C [-4 °F to 221 °F]
Output signal: HEX E25 to EA8
Termination: OCLPP (Open Cavity Leadless Plastic Package)

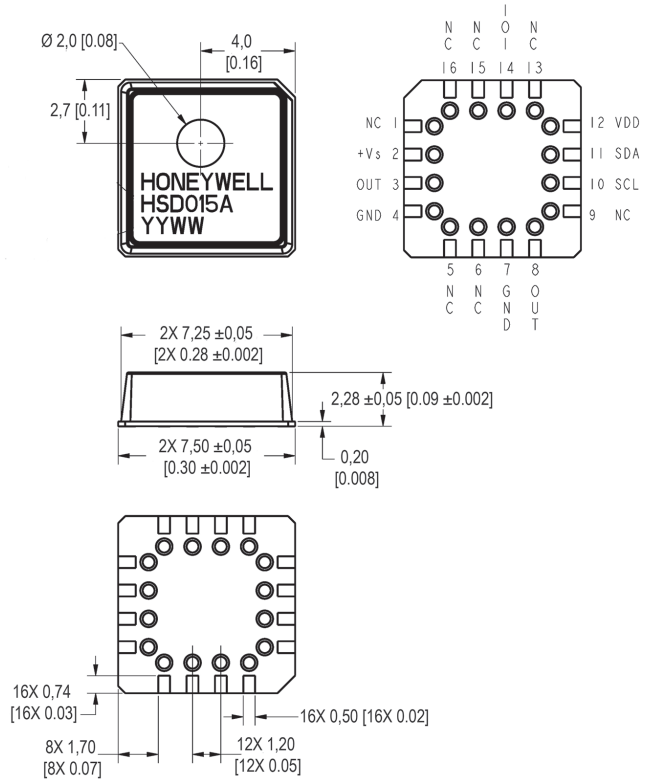

MEASUREMENT TYPE	PRESSURE RANGE	REFERENCE
Absolute	0 psi to 15 psi	HSD015A

Mass Airflow Sensors

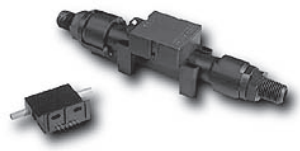

Mass Airflow sensors contain a thin-film, thermally isolated bridge structure that consists of a heater and temperature sensing elements. The bridge structure promotes sensitivity and fast response to the flow of air or other gas over the chip.

State-of-the-art chip design and manufacturing techniques allow the microbridge to be sensitive, fast and small. Used in appropriate applications where airflow needs to be measured.

Supply voltage: 8 Vdc to 15 Vdc
Operating temperature: -25 °C to 85 °C [-13 °F to 185 °F]
Media compatibility: Dry gas only

AWM2000 Series

The AWM2000 Series microbridge mass airflow sensor is a passive device comprised of two Wheatstone bridges and has bidirectional sensing capability. The heater control circuit is required for operation per specifications. The sensing bridge supply circuit is also required for operation per specifications. These two circuits are not on board the package and must be supplied in the application. The differential amplifier is often a useful interface for the sensing bridge. It can be used to introduce gain and to voltage offsets to the sensor output.

Signal conditioning: Unamplified (-44.5 mVdc to 44.5 mVdc)
Port style: Straight
Sensor resistance: 5 kOhm

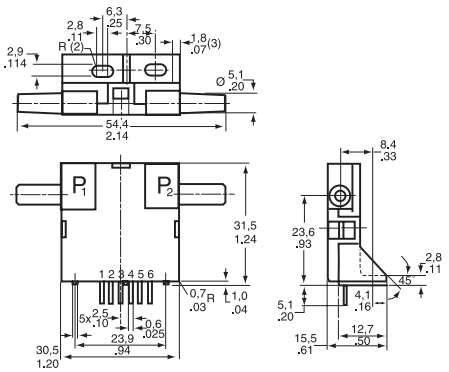

FLOW/PRESSURE RANGE	REFERENCE
±200 sccm	AWM2100V
±4.0 in H_2O (10 mBar)	AWM2200V
±1000 sccm (1 SLPM)	AWM2300V

AWM3000 Series

Like the AWM2000 Series, the dual Wheatstone bridges control airflow measurement. The AWM3000 Series is amplified; therefore, it can be used to increase the gain and to introduce voltage offsets to the sensor output. The heater control circuit and the sensing bridge supply circuit are on board the package.

Signal conditioning: Amplified (1 Vdc to 5 Vdc)
Port style: Straight

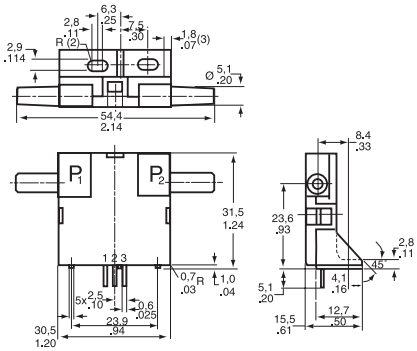

FLOW/PRESSURE RANGE	REFERENCE
±200 cm	AWM3100V
+2.0 in H_2O (5 mBar)	AWM3200V
±1000 sccm (1 SLPM)	AWM3300V

AWM40000 Series

The microbridge mass airflow sensor operates on the theory of heat transfer. Mass airflow is directed across the surface of the sensing elements. Output voltage varies in proportion to the mass air or other gas flow through the inlet and outlet ports of the package. The specially designed housing precisely directs and controls the airflow across the microstructure sensing element. Mechanical design of the package typically allows it to be easily mounted to printed circuit boards.

The microbridge mass airflow sensor has a unique silicon chip based on advanced microstructure technology. It consists of a thin-film, thermally isolated bridge structure containing heater and temperature sensing elements. The bridge structure provides a sensitive and fast response to the flow of air or other gas over the chip. Dual sensing elements positioned on both sides of a central heating element indicate flow direction as well as flow rate. Laser trimmed thick film and thin film resistors provide consistent interchangeability from one device to the next.

Port style: Manifold

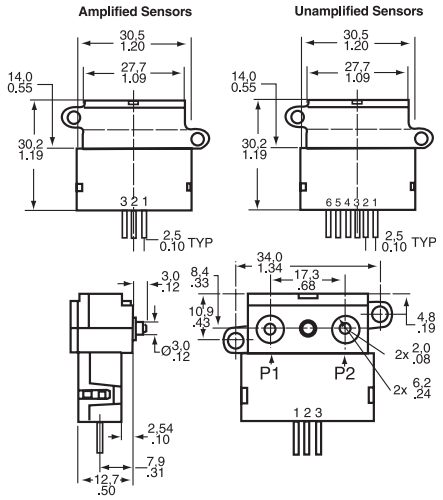

SIGNAL CONDITIONING	FLOW/PRESSURE RANGE	REFERENCE
Unamplified (8.5 mV)	±25 sccm	AWM42150VH
Unamplified (54.7 mV)	±1000 sccm (1 SLPM)	AWM42300V
Amplified (1 Vdc to 5 Vdc)	±1000 sccm (1 SLPM)	AWM43300V
Amplified (1 Vdc to 5 Vdc)	+ 6 SLPM	AWM43600V

AWM5000 Series - High Flow

AWM5000 Series microbridge mass airflow sensors feature a venturi type flow housing. They measure flow as high as 20 standard liters per minute (SLPM) while inducing a maximum pressure drop of 2.25 in H_2O. The microbridge chip is in direct contact with the flow stream, greatly reducing error possibilities due to orifice or bypass channel clogging.

The rugged plastic package has been designed to withstand common mode pressures up to 50 psi, and the small sensing element allows 100 g of shock without compromising performance. The included "AMP" compatible connector provides reliable connection in many demanding applications.

Each AWM5000 sensor contains circuitry which performs amplification, linearization, temperature compensation and gas calibration. A 1 Vdc to 5 Vdc linear output is possible for all listings regardless of flow range (5, 10, 15, or 20 SLPM) or calibration gas (nitrogen, carbon dioxide, nitrous oxide or argon). All calibration is performed by active laser.

Signal conditioning: Amplified (1 Vdc to 5 Vdc)
Port style: Threaded, ¼ in NPT

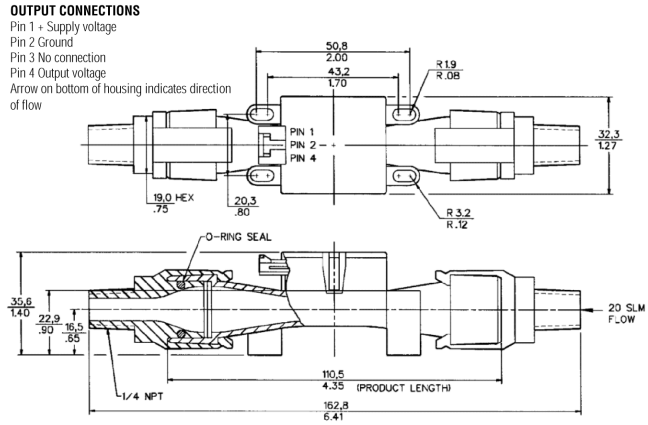

FLOW/PRESSURE RANGE	REFERENCE
0 SLPM to 5 SLPM (N_2 calibration)	AWM5101VN
0 SLPM TO 10 SLPM (N_2 calibration)	AWM5102VN
0 SLPM to 20 SLPM (CO_2 calibration)	AWM5104VC
0 SLPM to 20 SLPM (N_2 calibration)	AWM5104VN

CAUTION

PRODUCT DAMAGE

AWM Series Microbridge Mass Airflow Sensors are not designed to sense liquid flow and will be damaged by liquid flow through the sensor.

Failure to comply with these instructions could result in product damage.

AWM700 Series

AWM700 Series microbridge mass airflow sensors provide in-line flow measurement with a specially designed bypass flow housing. The sensors measure flow as high as 200 standard litres per minute (SLPM) while inducing a pressure drop of 1 inch H_2O, typically. The AWM700 has a high flow range capability in a small package.

Signal conditioning: Amplified (1 Vdc to 5 Vdc)
Port style: Tapered, 22 mm

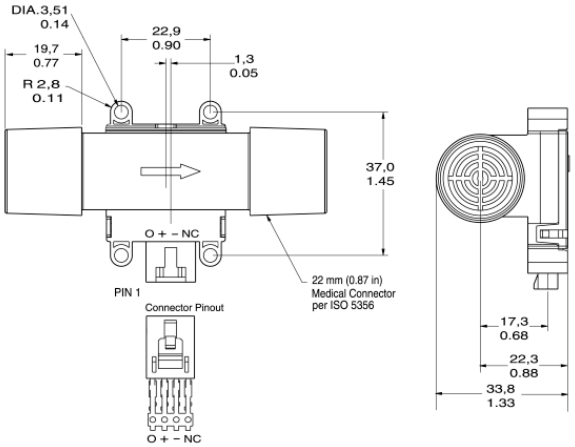

FLOW/PRESSURE RANGE	REFERENCE
+ 200 SLPM	AWM720P1

AWM90000 Series

The AWM90000 Series microbridge mass airflow sensors are available in two versions, mass flow and differential pressure. The AWM92100V has a flow range of ±200 sccm with a pressure drop of only 0.49 mBar, typically. The AWM92200V is a differential pressure version that has a range of ±2 in H_2O.

The AWM90000 Series has a 1 ms response time, operates with a supply voltage from 8.0 Vdc to 15.0 Vdc, while consuming only 50 mW of power. The compact plastic package will withstand a maximum overpressure of 25 psi without compromising performance.

Signal Conditioning: Unamplified
Port Style: Straight

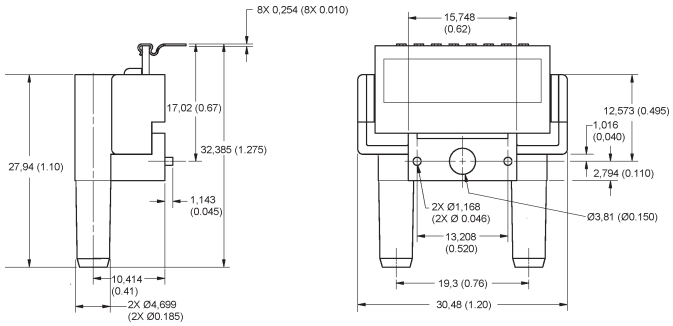

FLOW RANGE (FULL SCALE)	PRESSURE RANGE	REFERENCE
±200 SCCM		AWM92100V
	±2.0 H_2O (5 mBar)	AWM92200V

NOTICE

LAMINAR FLOW

Due to the fast response time of the sensor, these specifications were generated using laminar flow. Airflow instability or "turbulence" present in the airstream will result in an increase in measurement uncertainty.

The turbulent flow problem can be corrected by either straightening the airflow using flow laminarizing or by slowing the response of the sensor using a simple RC time constant on the output of the sensor. This, of course, slows down the sensor response time. The values needed depend on the amount of turbulence present in the application.

Several techniques for laminarizing the flow include adding hex shaped honeycombs, foam, screen materials or adding constrictors (frits) to the flow stream. There are various commercial laminar flow elements that can be purchased. Unfortunately the greater the efficiency of the laminarizer, the greater the increase in pressure drop in order to establish a given flow rate. Plastic honeycomb material probably gives the most improvement for the least pressure drop. In any test fixture, the avoidance of sharp radii is an absolute requirement.

CAUTION

PRODUCT DAMAGE

AWM Series Microbridge Mass Airflow Sensors are not designed to sense liquid flow and will be damaged by liquid flow through the sensor.

Failure to comply with these instructions could result in product

Force Sensors

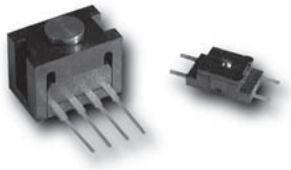

Force sensors operate on the principle that the resistance of silicon-implanted piezoresistors will increase when the resistors flex under any applied force. The sensor concentrates force from the application, through the stainless steel plunger, directly to the silicon sensing element. The amount of resistance changes in proportion to the amount of force being applied. This change in circuit resistance results in a corresponding mV output level.

FSG Series

Supply voltage: 360 mV span @ 10 Vdc
Operating temperature: -40 °C to 85 °C [-40 °F to 185 °F]
Sensitivity: 0.20 mV/g min., 0.24 mV/g typ., 0.28 mV/g max.
Overforce: 5500 g

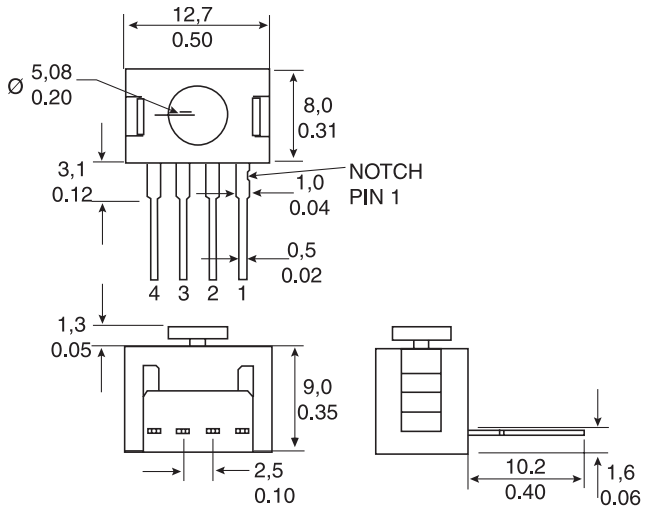

Plunger actuator - force range 1500 g

	REFERENCE
Non-compensated	FSG15N1A

FSL Series

Supply voltage: 60 mV span @ 5 Vdc
Operating temperature: -40 °C to 85 °C [-40 °F to 185 °F]
Sensitivity: 0.10 mV/g min., 0.12 mV/g typ., 0.14 mV/g max.
Overforce: 4500 g

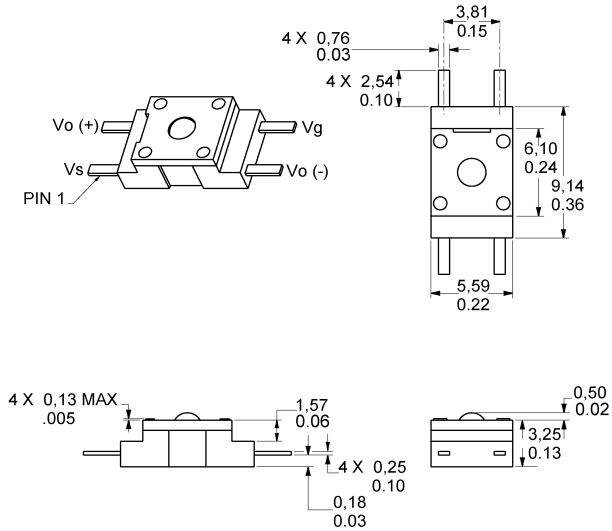

Ball bearing actuator - force range 500 g

	REFERENCE
Non-compensated	FSG15N1A

Model 1865 Force/Pressure Transducer

Model 1865 is a high-performance transducer specifically designed to address the needs of certain medical and specialized OEM applications. Offering laser-trimmed compensation, Model 1865 may be specified to operate with either a constant current or voltage supply.

Model 1865 employs a solid state piezoresistive pressure transducer mounted in a plastic package. For applications where force is applied by a flexible membrane to the sensor, such as found in infusion pumps, Model 1865's precision height silicone diaphragm provides long life and is often a reliable replacement for older force or load cell transducers. Utilizing a silicon rubber diaphragm, Model 1865 is compatible with some liquid media applications. Model 1865 may be operated in either current or voltage excitation, and its output may be amplified or signal conditioned, as required. The semiconductor-based sensor offers high resolution using its Wheatstone bridge strain gage design. The height of the unit's patented, poured-in-place silicon rubber diaphragm is controlled to promote sensitivity to low pressure. This diaphragm is bonded to a plastic header and transmits force applied through a special silicone gel to the diaphragm of a silicon piezoresistive die. The back of the die is exposed to atmospheric pressure, which results in a gage pressure output.

Pressure over-range protection: 3X span or 60 psi, whichever is least
Media/materials compatibility
Top side: Room atmosphere, directly applied force, and liquids compatible with dimethyl silicon, polyetherimide (Ultem®)
Bottom side: Non-corrosive dry gasses and fluids compatible with silicon, pyrex, RTV silicone and ceramic
Sensor: Gage pressure
Diaphragm: Dimethyl silicone
Compensation: Laser-trimmed normalized output

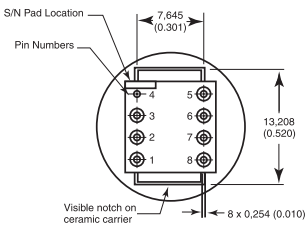

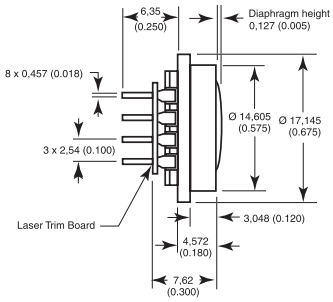

OPTIONS

Excitation 1.5 mA

PRESSURE	REFERENCE
0 psi to 5 psi	1865-01G-L-N
0 psi to 10 psi	1865-02G-L-N
0 psi to 15 psi	1865-03G-L-N
0 psi to 25 psi	1865-04G-L-N
0 psi to 30 psi	1865-05G-L-N

Excitation 10 Vdc

PRESSURE	REFERENCE
0 psi to 5 psi	1865-01G-K-N
0 psi to 10 psi	1865-02G-K-N
0 psi to 15 psi	1865-03G-K-N
0 psi to 25 psi	1865-04G-K-N
0 psi to 30 psi	1865-05G-K-N

FS Series Force/Pressure Sensor

The FS01/FS03 Sensors are special low-cost, peizoresistive-based force sensors. These high-level voltage output, calibrated and temperature- compensated sensors give an accurate and stable output over a 5 °C to 50 °C [41 °F to 122 °F] temperature range. They offer simple operation from a single 5.0 Vdc supply. The FS01/FS03 sensors feature an integrated circuit sensor element and laser-trimmed, thick-film ceramic in a small plastic housing. Their extremely small size often enables the use of multiple sensors in limited available space. This package also provides excellent corrosion resistance and isolation to external package stress.

Supply voltage: 12.0 Vdc
Operating temperature: 0 °C to 70 °C [32 °F to 158 °F]
Maximum force: 7 lb

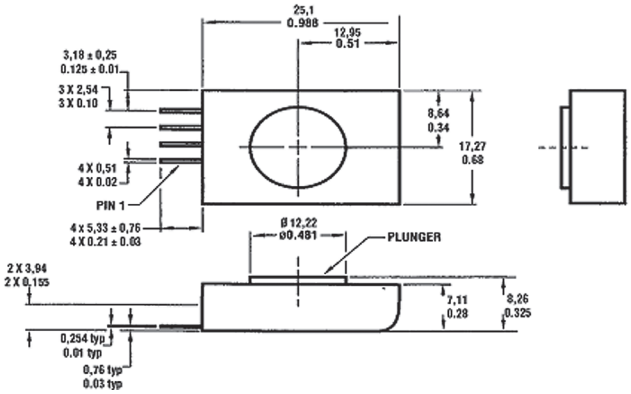

PRESSURE	REFERENCE
0 lb to 1.5 lb	FS01
0 lb to 3.0 lb	FS03

Humidity Sensors

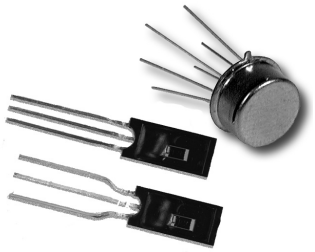

Relative Humidity/Temperature and Relative Humidity sensors are configured with integrated circuitry to provide on-chip signal conditioning. These sensors contain a capacitive sensing die set in thermoset polymers that interacts with platinum electrodes. The laser trimmed sensors have an interchangeability of ±5 % from 0 %RH to 60 %RH, with stable, low drift performance.

Absorption based humidity sensors provide both temperature and %RH (Relative Humidity) outputs. On-chip signal processing ensures linear voltage output versus %RH. Sensor laser trimming offers accuracy of ± 2.5 %, and achieves 2 %RH accuracy with calibration.

Supply voltage: 4.0 Vdc to 5.8 Vdc
Operating humidity range: 0 %RH to 100 %RH, non-condensing
Operating temperature range: -40 °C to 85 °C [-40 °F to 185 °F]

HIH-4000 Series

The HIH-4000 Series humidity sensors are designed specifically for high volume OEM users. Direct input to a controller or other device is made possible by this sensor's linear voltage output. With a typical current draw of only 200 µA, the HIH-4000 Series is often ideally suited for low drain, battery operated systems. Tight sensor interchangeability reduces or eliminates OEM production calibration costs. Individual sensor calibration data is available.

These sensors deliver instrumentation-quality RH sensing performance in a competitively priced, solderable SIP. Available in two lead spacing configurations, the RH sensor is a laser trimmed, thermoset polymer capacitive sensing element with on-chip integrated signal conditioning.

Package style: Solderable SIP

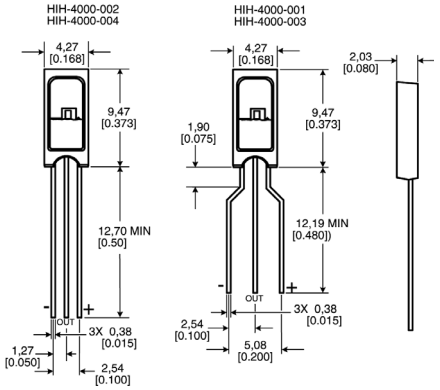

TERMINATION	CALIBRATION	REFERENCE
2,54 mm [0.100 in] lead pitch	None	HIH-4000-001
1,27 mm [0.050 in] lead pitch	None	HIH-4000-002
2,54 mm [0.100 in] lead pitch	with calibration and data printout	HIH-4000-003
1,27 mm [0.050 in] lead pitch	with calibration and data printout	HIH-4000-004

HIH Series

HIH-3602 Monolithic integrated circuit

HIH-3602-A and HIH-3602-C RH sensors combine both relative humidity and temperature sensing in a TO-5 housing with a hydrophobic sintered stainless steel filter. The temperature sensor is thermally connected with the RH sensor making the HIH-3602-A/C often ideal for measuring dew point and other absolute moisture terms.

Package style: TO-5 can
Termination: 0,46 mm [0.18 in]
NIST certification: NIST calibration sensor-specific printout

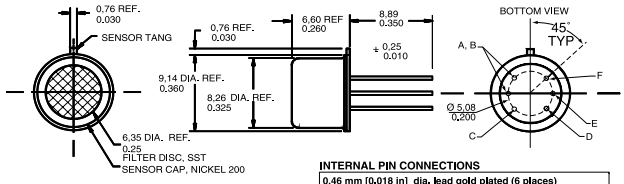

INTERNAL PIN CONNECTIONS

0,46 mm [0.018 in] dia. lead gold plated (6 places)	
A, B	(HIH-3602-A) Thermistor for temperature compensation
A, B	(HIH-3602-C) RTD for temperature compensation
C	+VDC supply
D	(-) Power or ground
E	VDC out
F	Case ground

TEMPERATURE SENSOR	REFERENCE
100 kOhm ±5 % @ 25 °C, NTC 0-50 C	HIH-3602-A
1000 Ohm ±0.2 % @ 0 °C, platinum RTD	HIH-3602-C

HIH-3602-L Integrated circuit

The HIH-3602-L Relative Humidity (RH) sensor delivers instrumentation-quality RH sensing performance in a rugged, low cost, slotted TO-39 housing. On-board signal conditioning reduces product development times while a typical current draw of only 200 µA makes the HIH-3602-L perfect for battery powered systems. This sensor should be shielded from bright light.

Package style: TO-39 can
Termination: 0,46 mm [0.18 in]
NIST certification: None

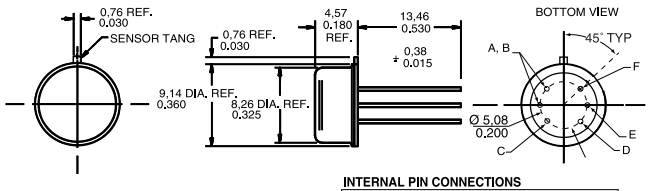

INTERNAL PIN CONNECTIONS

0,46mm [0.018 in] dia. lead gold plated (6 places)	
A, B	No connection
C	+VDC supply
D	(-) Power or ground
E	VDC out
F	Case ground

REFERENCE
HIH-3602-L

CAUTION

PRODUCT DAMAGE

The inherent design of this component causes it to be sensitive to the electrostatic discharge (ESD). To prevent ESD-induced damage and/or degradation, take normal ESD precautions when handling this product.

Failure to comply with these instructions could result in product damage

Temperature Sensors - RTDs

Honeywell's thin-film RTD (Resistance Temperature Detector) temperature sensors feature two distinct series. These sensors are laser-trimmed for accuracy and interchangeability. Linear outputs are stable and fast.

The TD Series Temperature Sensors are silicon-based RTDs. They offer 2000 Ohm nominal resistance at 20 °C. Temperature range of -40 °C to 150 °C [-40 °F to 302 °F].

The HEL Series Temperature Sensors are platinum RTDs, offering 100 Ohm or 1000 Ohm versions and temperature ranges of -200 °C to 540 °C [-300 °F to 1000 °F].

HEL-700 Series 100/1000 Ohm Platinum RTD

Supply voltage: 4 Vdc to 9 Vdc
Base resistance and interchangeability: 1000 ±2 Ohm (±0.2 %) @ 0 °C (standard)
1000 ±1 Ohm (±0.1 %) @ 0 °C (optional)

OPTIONS

HEL-700

Temperature range: -200 °C to 540 °C [-300 °F to 1000 °F]
Packaging style/termination: Radial chip/ribbon leads (type A)
Radial chip/no leads (type B)
SMT (axial) flip chip/no leads (type C)

Type A

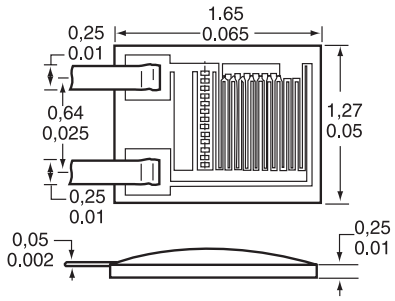

Type B

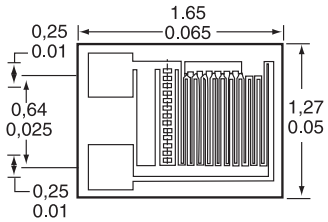

Type C

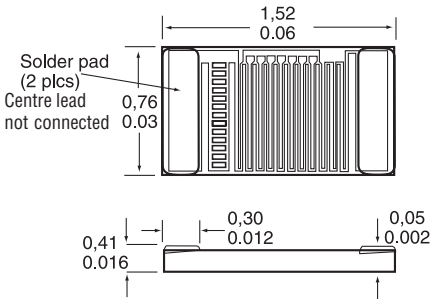

100 Ohm (0.00385 Ohm/Ohm/°C DIN standard)

PACKAGING STYLE	BASE RESISTANCE AND INTERCHANGEABILITY	REFERENCE
Type A	Standard	HEL-700-T-0-A
Type A	Optional	HEL-700-T-1-A
Type B	Standard	HEL-700-T-0-B
Type B	Optional	HEL-700-T-1-B

1000 Ohm (0.00375 Ohm/Ohm/°C)

PACKAGING STYLE	BASE RESISTANCE AND INTERCHANGEABILITY	REFERENCE
Type A	Standard	HEL-700-U-0-A
Type A	Optional	HEL-700-U-1-A
Type B	Standard	HEL-700-U-0-B
Type B	Optional	HEL-700-U-1-B
Type C	Standard	HEL-700-U-0-C
Type C	Optional	HEL-700-U-1-C

CAUTION

PRODUCT DAMAGE

The inherent design of this component causes it to be sensitive to the electrostatic discharge (ESD). To prevent ESD-induced damage and/or degradation, take normal ESD precautions when handling this product.

Failure to comply with these instructions could result in product damage

HEL-700 Series 100/1000 Ohm Platinum RTD (continued)

HEL-705/707/711/712/716/717

Temperature range: -200 °C to 260 °C [-320 °F to 500 °F] (HEL-705/711/716)
-75 °C to 540 °C [-100 °F to 1000 °F] (HEL-707/712/717)

Packaging style: Ceramic case
Termination: 12 in leadwires
NIST calibration: None

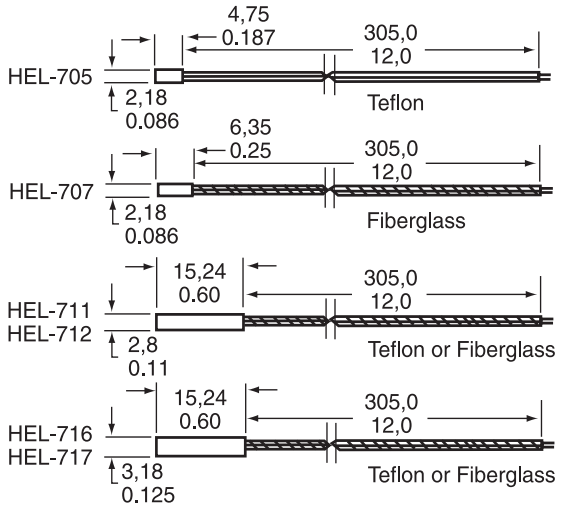

100 Ohm (0.00385 Ohm/Ohm/°C DIN standard)

BASE RESISTANCE AND INTERCHANGEABILITY	REFERENCE
Standard	HEL-705-T-0-12-00
Optional	HEL-705-T-1-12-00
Standard	HEL-707-T-0-12-00
Optional	HEL-707-T-1-12-00
Standard	HEL-711-T-0-12-00
Optional	HEL-711-T-1-12-00
Standard	HEL-712-T-0-12-00
Optional	HEL-712-T-1-12-00
Standard	HEL-716-T-0-12-00
Optional	HEL-716-T-1-12-00
Standard	HEL-717-T-0-12-00
Optional	HEL-717-T-1-12-00

1000 Ohm (0.00375 Ohm/Ohm/°C)

BASE RESISTANCE AND INTERCHANGEABILITY	NIST CALIBRATION	REFERENCE
Standard		HEL-705-U-0-12-00
Optional		HEL-705-U-1-12-00
Standard		HEL-707-U-0-12-00
Optional		HEL-707-U-1-12-00
Standard		HEL-711-U-0-12-00
Optional		HEL-711-U-1-12-00
Standard		HEL-712-U-0-12-00
Optional		HEL-712-U-1-12-00
Standard		HEL-716-U-0-12-00
Optional		HEL-716-U-1-12-00
Optional	NIST @ 0 °C and 100 °C	HEL-716-U-1-12-C2
Standard		HEL-717-U-0-12-00
Optional		HEL-717-U-1-12-00

TD Series 2000 Ohm Silicon RTD

Supply voltage: 10 Vdc
Temperature range: -40 °C to 150 °C [-40 °F to 302 °F]

OPTIONS

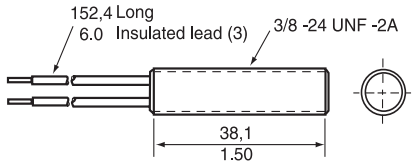

TD4A Liquid temperature sensor

PACKAGING STYLE	TERMINATION	REFERENCE
Threaded aluminium case	Leadwires	TD4A

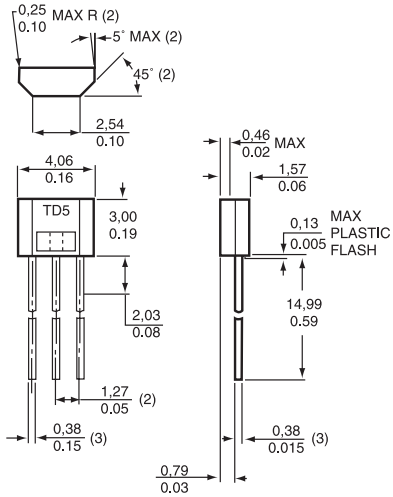

TD5A Subminiature temperature sensor

PACKAGING STYLE	TERMINATION	REFERENCE
Plastic case	SIP	TD5A

Temperature Sensors - Thermistors

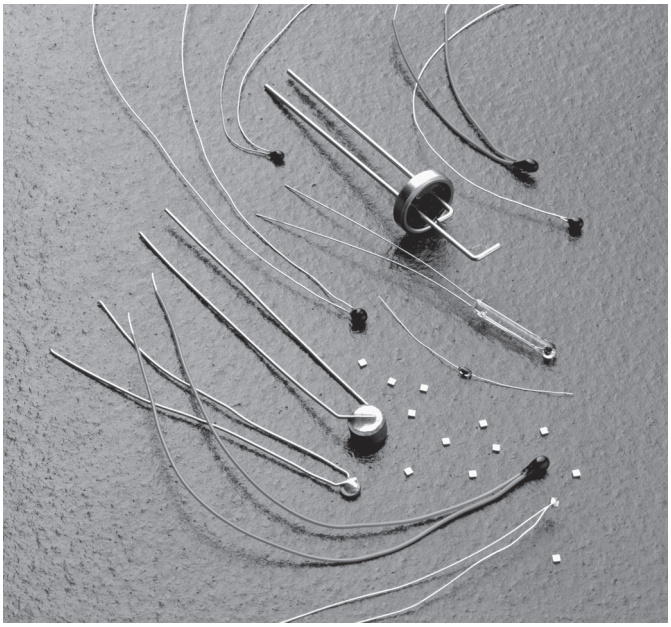

Thermistors change resistance with a change in temperature. They do not amplify, rectify, polarize or generate a signal. The thermistor temperature may be changed by the surrounding temperature or by self-heating the thermistor by passing a current through it.

Most applications such as temperature measurement and control or copper coil compensation require that the power dispersed in a thermistor be kept to a minimum so as not to perceptibly self-heat the thermistor. Other applications depend entirely on the self-heating effect. When the surrounding temperature is fixed, the resistance of a thermistor is largely a function of power being dispersed within it, raising its temperature above its environment. Under these operating conditions, the temperature may rise 100 °C to 200 °C [121 °F to 392 °F] and the resistance may be lowered to 1/1000th of its original value at low current.

This self-heating characteristic provides a whole field of uses for the thermistor. In the self-heat state it is thermally sensitive (its resistance will be changed) to any condition, changing the rate at which heat is conducted away from it. If the rate of heat removal is ideally fixed, then the thermistor is sensitive to power input and suited for use in voltage or power level control applications.

Glass Encapsulated Chip (GEC) Thermistors

The GEC thermistors are high-quality, hermetically-sealed, glass-encapsulated chip thermistors in an axial lead package. They cover the full temperature range of -60 °C to 300 °C [-76 °F to 572 °F]. These rugged sensors are designed for many applications which demand reliability at low cost. The uniform dimensions often are ideally suited for automated assembly.

Operating temperature:	-60 °C to 300 °C [-76 °F to 572 °F]
Encapsulation:	DO-35 glass
Lead material:	Tinned copper-clad steel
Dissipation constant (DC):	2.5 mW/°C in still air min.
Time constant (TC):	4 s in still air max.
Resistance range at 25 °C [77 °F]:	1 kOhm to 1 MOhm

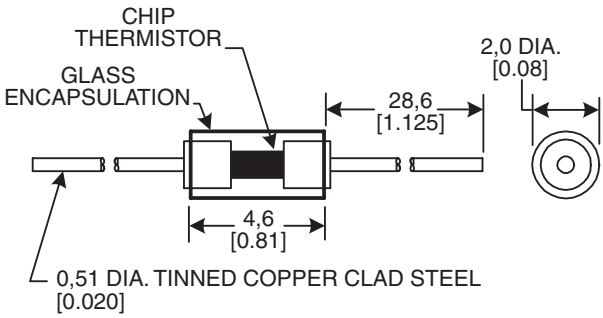

OPTIONS

At 25 °C [77 °F]

OHM	% TOLERANCE	R/T CURVE	REFERENCE
1,000	10	10A	135-102DAG-J01
2,000	10	10	135-202FAG-J01
3,000	10	10	135-302FAG-J01
5,000	5	10	135-502FAF-J01
5,000	10	10	135-502FAG-J01
10,000	5	10	135-103FAF-J01
10,000	10	16	135-103FAG-J01
10,000	5	16	135-103LAF-J01
20,000	10	16	135-203LAG-J01
30,000	10	16	135-303KAG-J01
50,000	5	16	135-503LAF-J01
50,000	10	16	135-503LAG-J01
100,000	5	16	135-104LAF-J01
100,000	10	16	135-104LAG-J01
200,000	10	1	135-204QAG-J01
500,000	10	1	135-504QAG-J01
1 M	10	1	135-105QAG-J01

Interchangeable R/T curve matched ±1 °C from 0 °C to 100 °C [32 °F to 212 °F]

OHM	R/T CURVE	REFERENCE
10,000	16	135-103LFW-J01
20,000	16	135-203LFW-J01
30,000	16	135-303LFW-J01
50,000	16	135-503LFW-J01
100,000	16	135-104LFW-J01

Epoxy-coated or Uncoated Chip Thermistors

Epoxy-coated or uncoated chip thermistors are available in a broad range of custom resistance values and R/T curves. They are also available in two lead types:

- Uninsulated: 0,2032 mm [0.008 in] diameter, tinned copper for 1 kOhm or less, and tinned copper alloy for greater than 1 kOhm.
- Insulated: 0,254 mm [0.010 in] diameter, nickel wire, Teflon®-insulated, 38,1 mm [1.5 in] long and furnished with 6,35 mm [0.25 in] stripped ends of 0,4064 mm [0.016 in] and 0,508 mm [0.020 in] tin-plated copper leads.

Operating temperature range: -40 °C to 125 °C [-40 °F to 257 °F]*
Encapsulation: Epoxy-coated or uncoated
Lead material: • Uninsulated: tinned copper/copper alloy
• Insulated: tinned copper/copper alloy with nickel wire Teflon
Dissipation constant (DC): 0.75 mW/°C in still air min.
Time constant (TC): 15 s in still air max.
Resistance range at 25 °C [77 °F]: 100 Ohm to 100 kOhm
*Very accurate (±0.2 °C) when used between 0 °C to 70 °C [32 °F to 158 °F]. Other ranges and tolerances are available.

OPTIONS

Epoxy-coated chip

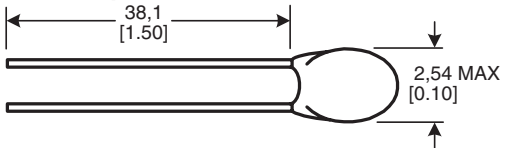

10 % tolerance at 25 °C [77 °F], uninsulated leads

OHM	R/T CURVE	REFERENCE
100	17	197-101CAG-A01
300	17	197-301CAG-A01
500	10A	197-501DAG-A01
1,000	10A	197-102DAG-A01
2,000	16	197-202LAG-A01
3,000	16	197-302LAG-A01
5,000	16	197-502LAG-A01
10,000	16	197-103LAG-A01
20,000	16	197-203LAG-A01
30,000	18	197-303KAG-A01
50,000	1	197-503QAG-A01
100,000	1	197-104QAG-A01

10 % tolerance at 25 °C [77 °F], insulated leads

OHM	R/T CURVE	REFERENCE
100	17	199-101CAG-A01
300	17	199-301CAG-A01
500	10A	199-501DAG-A01
1,000	10A	199-102DAG-A01
2,000	16	199-202LAG-A01
3,000	16	199-302LAG-A01
5,000	16	199-502LAG-A01
10,000	16	199-103LAG-A01
20,000	16	199-203LAG-A01
30,000	18	199-303KAG-A01
50,000	1	199-503QAG-A01
100,000	1	199-104QAG-A01

Uncoated chip

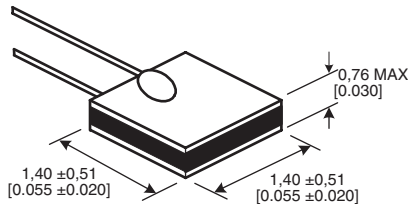

10 % tolerance at 25 °C [77 °F], uninsulated leads

OHM	R/T CURVE	REFERENCE
100	17	195-101CAG-A01
300	17	195-301CAG-A01
500	10A	195-501DAG-A01
1,000	10A	195-102DAG-A01
2,000	16	195-202LAG-A01
3,000	16	195-302LAG-A01
5,000	16	195-502LAG-A01
10,000	16	195-103LAG-A01
20,000	16	195-203LAG-A01
30,000	18	195-303KAG-A01
50,000	1	195-503QAG-A01
100,000	1	195-104QAG-A01

10 % tolerance at 25 °C [77 °F], insulated leads

OHM	R/T CURVE	REFERENCE
100	17	198-101CAG-A01
300	17	198-301CAG-A01
500	10A	198-501DAG-A01
1,000	10A	198-102DAG-A01
2,000	16	198-202LAG-A01
3,000	16	198-302LAG-A01
5,000	16	198-502LAG-A01
10,000	16	198-103LAG-A01
20,000	16	198-203LAG-A01
30,000	18	198-303KAG-A01
50,000	1	198-503QAG-A01
100,000	1	198-104QAG-A01

UNI-CURVE® Interchangeable Thermistors

The UNI-CURVE® Interchangeable thermistors are temperature-matched. They offer additional cost savings by eliminating the need for individual resistance temperature calibration, as well as standardization of circuit components and simplification of design and replacement problems.

Operating temperature range: -40 °C to 150 °C [-40 °F to 302 °F]*
Encapsulation: Epoxy-coated
Lead material: Tinned copper alloy
Dissipation constant (DC): 0.75 mW/°C in still air min.
Time constant (TC): 15 s in still air max.
Resistance range at 25 °C [77 °F]: 1 kOhm to 100 kOhm
*Very accurate (±0.2 °C) when used between 0 °C to 70 °C [32 °F to 158 °F]. Other ranges and tolerances are available.

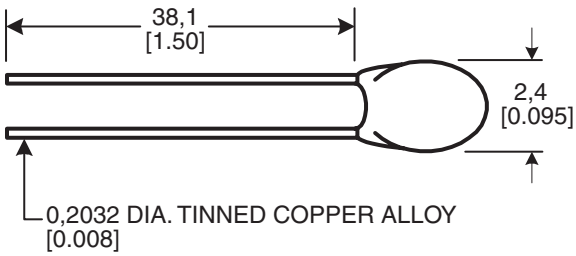

OPTIONS

±0,2 °C tolerance at 25 °C [77 °F]
0 °C to 70 °C [32 °F to 158 °F]

OHM	R/T CURVE	REFERENCE
1,000	10A	192-102DET-A01
2,252	16	192-222LET-A01
3,000	16	192-302LET-A01
5,000	16	192-502LET-A01
10,000	16	192-103LET-A01
30,000	18	192-303KET-A01
30,000	1	192-303QET-A01
50,000	1	192-503QET-A01
100,000	1	192-104QET-A01

±0,5 °C tolerance at 25 °C [77 °F]
0 °C to 70 °C [32 °F to 158 °F]

OHM	R/T CURVE	REFERENCE
1,000	10A	192-102DEV-A01
2,252	16	192-222LEV-A01
3,000	16	192-302LEV-A01
5,000	16	192-502LEV-A01
10,000	16	192-103LEV-A01
30,000	18	192-303KEV-A01
30,000	1	192-303QEV-A01
50,000	1	192-503QEV-A01
100,000	1	192-104QEV-A01

±1,0 °C tolerance at 25 °C [77 °F]
0 °C to 70 °C [32 °F to 158 °F]

OHM	R/T CURVE	REFERENCE
1,000	10A	192-102DEW-A01
2,252	16	192-222LEW-A01
3,000	16	192-302LEW-A01
5,000	16	192-502LEW-A01
10,000	16	192-103LEW-A01
30,000	18	192-303KEW-A01
30,000	1	192-303QEW-A01
50,000	1	192-503QEW-A01
100,000	1	192-104QEW-A01

Disc Thermistors

Uncoated or epoxy-coated Disc thermistors are available in a broad range of custom resistance values and R/T curves. They are only available with uninsulated leads. Diameters range from 2,54 mm [0.1 in] to 10,16 mm [0.4 in]. They are often ideally suited for low-cost applications with a maximum temperature of 150 °C [302 °F]. They are also typically well suited for PC board mount and are available on tape and reel.

Operating temperature range: -60 °C to 150 °C [-76 °F to 302 °F]
Encapsulation: Epoxy-coated or uncoated
Lead material: Uninsulated: tinned copper/copper alloy
Dissipation constant (DC): Varies with size, ranges from 3 mW/°C to 8 mW/°C
Time constant (TC): Varies with size ranges from 10 s to 32 s
Resistance range at 25 °C [77 °F]: 100 Ohm to 100 kOhm

OPTIONS

Epoxy-coated chip

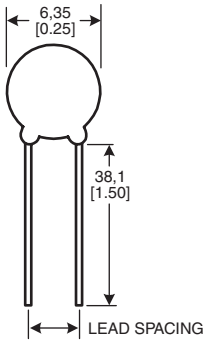

10 % tolerance at 25 °C [77 °F]
Lead diameter 0,4064 mm [0.016 in]
Lead spacing 2,54 mm [0.1 in]

OHM	R/T CURVE	DC MIN.	TC MAX.	REFERENCE
500	10	3	10	140-501FAG-RB1
1,000	10	4	10	140-102FAG-RB1
3,000	16	3	10	140-302LAG-RB1
5,000	16	4	10	140-502LAG-RB1
10,000	16	4	10	140-103LAG-RB1
50,000	1	3	10	140-503QAG-RB1
100,000	1	3	10	140-104QAG-RB1

10 % tolerance at 25 °C [77 °F]
Lead diameter 0,508 mm [0.020 in]
Lead spacing 5,08 mm [0.2 in]

OHM	R/T CURVE	DC MIN.	TC MAX.	REFERENCE
100	10	4	16	143-101FAG-RC1
200	10	5	18	143-201FAG-RC1
300	10	6	20	143-501FAG-RC1
1,000	16	6	20	143-102LAG-RC1
3,000	16	6	22	143-302LAG-RC1
5,000	16	7	35	143-502LAG-RC1
10,000	1	4	20	143-103QAG-RC1
30,000	1	6	25	143-303QAG-RC1
50,000	1	7	30	143-503QAG-RC1

Uncoated chip

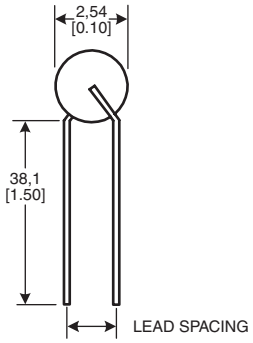

10 % tolerance at 25 °C [77 °F]
Lead diameter 0,4064 mm [0.016 in]
Lead spacing 2,54 mm [0.1 in]

OHM	R/T CURVE	DC MIN.	TC MAX.	REFERENCE
500	10	3	10	142-501FAG-RB1
1,000	10	4	10	142-102FAG-RB1
3,000	16	3	10	142-302LAG-RB1
5,000	16	4	10	142-502LAG-RB1
10,000	16	4	10	142-103LAG-RB1
50,000	1	3	10	142-503QAG-RB1
100,000	1	3	10	142-104QAG-RB1

10 % tolerance at 25 °C [77 °F]
Lead diameter 0,508 mm [0.020 in]
Lead spacing 5,08 mm [0.2 in]

OHM	R/T CURVE	DC MIN.	TC MAX.	REFERENCE
100	10	4	16	145-101FAG-RC1
200	10	5	18	145-201FAG-RC1
300	10	6	20	145-301FAG-RC1
500	10	6	25	145-501FAG-RC1
1,000	16	6	20	145-102LAG-RC1
3,000	16	6	22	145-302LAG-RC1
5,000	16	7	35	145-502LAG-RC1
10,000	1	4	20	145-103QAG-RC1
30,000	1	7	28	145-303QAG-RC1
50,000	1	8	32	145-503QAG-RC1

Standard Bead Thermistors

Standard Bead thermistors are hermetically-sealed in glass. These small units provide maximum stability when used to 300 °C [572 °F] for high temperature design requirements. They are often ideally suited for many stringent military, aerospace and oceanographic applications.

Operating temperature range:	-60 °C to 300 °C [-76 °F to 572 °F]
Encapsulation:	Glass hermetic seal
Lead material:	Platinum iridium
Dissipation constant (DC):	0.4 mW/°C in still air min.
Time constant (TC):	4 s in still air max.
Resistance range at 25 °C [77 °F]:	200 Ohm to 1 MOhm

OPTIONS

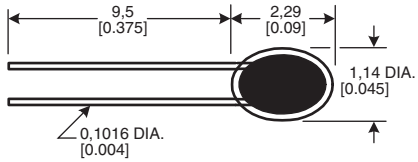

Adjacent leads
20 % Tolerance at 25 °C [77 °F]

OHM	R/T CURVE	RATIO 0 °C/50 °C	REFERENCE
200	8	4.80	112-201BAJ-B01
1,000	11	7.04	112-102EAJ-B01
2,000	11	7.04	112-202EAJ-B01
5,000	11	7.04	112-502EAJ-B01
10,000	12	7.59	112-103FAJ-B01
20,000	13	9.11	112-203HAJ-B01
50,000	14	9.53	112-503JAJ-B01
100,000	15	10.45	112-104KAJ-B01
200,000	15	10.45	112-204KAJ-B01
500,000	4	11.78	112-504NAJ-B01
1 M	5	13.12	112-105PAJ-B01

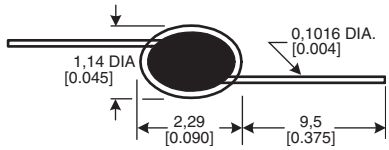

Axial leads
20 % Tolerance at 25 °C [77 °F]

OHM	R/T CURVE	RATIO 0 °C/50 °C	REFERENCE
2,000	11	7.04	112-202EAJ-H01
5,000	11	7.04	112-502EAJ-H01
10,000	12	7.59	112-103FAJ-H01
100,000	15	10.45	112-104KAJ-H01
600,000	4	11.78	112-604NAJ-H01

Small Bead Thermistors

Small Bead Thermistors feature relatively uniform size, offer ultra-fast time response and are highly sensitive to electric power. They are often ideally suited for use in low heat capacity applications and their micro size many times makes them perfect for use in extremely small assemblies such as catheters and hypodermic needles. They are also often used in self-heat applications such as gas analysis, gas flow measurement and thermal conductivity analysis.

Operating temperature range: -60 °C to 300 °C [-76 °F to 572 °F]
Encapsulation: Glass hermetic seal
Lead material: Platinum iridium
Dissipation constant (DC): 0.1 mW/°C in still air min.
Time constant (TC): 1 s in still air max.
Resistance range at 25 °C [77 °F]: 2 kOhm to 100 kOhm

OPTIONS

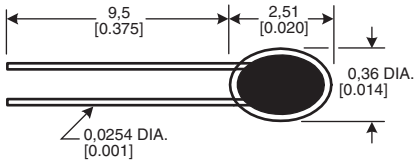

Adjacent leads at 25 °C [77 °F]

OHM	% TOLERANCE	R/T CURVE	RATIO 0 °C/50 °C [32 °F/122 °F]	REFERENCE
2,000	25	9	5.50	111-202CAK-B01
8,000	20	11	7.04	111-802EAJ-B01
30,000	25	11	7.04	111-303EAK-B01

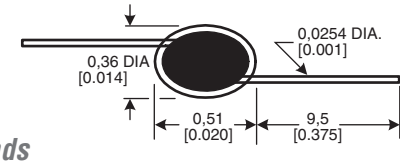

Axial leads at 25 °C [77 °F]

OHM	% TOLERANCE	R/T CURVE	RATIO 0 °C/50 °C [32 °F/122 °F]	REFERENCE
2,000	25	9	5.50	111-202CAK-H01
8,000	20	11	7.04	111-802EAJ-H01
10,000	20	11	7.04	111-103EAJ-H01
100,000	25	13	9.11	111-104HAK-H01

Glass Probe Thermistors

Glass Probe thermistors are shock resistant, rugged, glass-encapsulated units that are ideally suited for immersion in fluid and convenient for mounting in air sensor assemblies. They are available in two configurations: standard and mini.

Operating temperature range: -60 °C to 300 °C [-76 °F to 572 °F]
Encapsulation: Glass
Lead material: Dumet (copper-clad Ni-Fe wire)
Dissipation constant (DC): • Standard: 1.0 mW/°C in still air min.
• Mini: 0.7 mW/°C in still air min.
Time constant (TC): • Standard: 22 s in still air max.
• Mini: 10 s in still air max.
Resistance range at 25 °C [77 °F]: 1 kOhm to 10 MOhm

OPTIONS

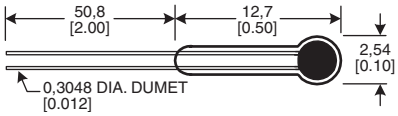

Standard
20 % Tolerance at 25 °C [77 °F]
dc 1.0 mW/°C min., TC 22 s max.

OHM	R/T CURVE	RATIO	REFERENCE
1,000	11	7.04	121-102EAJ-Q01
2,000	11	7.04	121-202EAJ-Q01
5,000	11	7.04	121-502EAJ-Q01
10,000	12	7.59	121-103FAJ-Q01
50,000	14	9.53	121-502JAJ-Q01
100,000	15	10.45	121-104KAJ-Q01
200,000	15	10.45	121-202KAJ-Q01
500,000	4	11.89	121-504NAJ-Q01
1 M	5	13.12	121-105PAJ-Q01
10 M	6	15.65	121-106QAJ-Q01

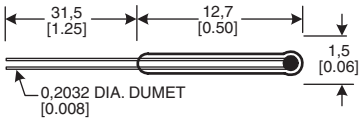

Mini
20 % Tolerance at 25 °C [77 °F]
dc 0.7 mW/°C min., TC 10 s max.

OHM	R/T CURVE	RATIO	REFERENCE
1,000	11	7.04	120-102EAJ-Q01
2,000	11	7.04	120-202EAJ-Q01
10,000	12	7.59	120-103FAJ-Q01
50,000	14	9.53	120-502JAJ-Q01
100,000	15	10.45	120-104KAJ-Q01

E-I Matched Bead Thermistors

E-I Matched Bead thermistors are designed for use in many gas chromatography and other thermal conductivity gas analysis instruments. Each bead is mounted to a special hermetically-sealed header. For maximum sensitivity, the higher resistance units should be used at higher ambient temperatures.

Operating temperature range: -60 °C to 300 °C [-76 °F to 572 °F]
Encapsulation: Glass hermetic seal
Lead material: Tinned Ni-Fe

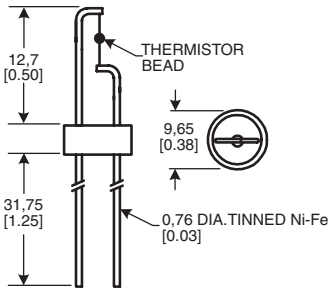

OPTIONS

Helium-matched assembly

Characteristics:	115-802EDJ-801
Resistance at 25 °C [77 °F]:	8000 Ohm ±25 %
Resistance at 0 °C [32 °F] (approx.):	23,200 Ohm
Resistance at 50 °C [122 °F] (approx.):	3,200 Ohm
Ratio of resisistance 0 °C/50 °C:	6.56 to 7.99
Beta nominal at 25 °C:	3495 K
Temperature coefficient at 25 °C:	-3.9 %/°C
Time constant (TC) still air max.:	1 s
Dissipation constant (DC) still air min.:	0.16 mW/°C
DC helium:	0.5 mW/°C
Power rating (air):	45 mW
Power rating (helium):	140 mW
Max. ambient temperature:	250 °C [482 °F]
Max. operating temperature (including self-heat):	300 °C [572 °F]
Resisistance at max. operating temperature:	25 Ohm

2 % resistance at 25 °C [77 °F]

DESCRIPTION	REFERENCE
Two 111-802EAJ-H01 each mounted on a glass hermetic seal and matched in helium to within 30 mV, 25 mV and 20 mV of each other at 2 mA, 5 mA, 10 mA and 15 mA.	115-802EDJ-801

Air-matched assembly

Characteristics:	115-202CDK-801
Resistance at 25 °C [77 °F]:	2000 Ohm ±25 %
Resistance at 0 °C [32 °F] (approx.):	4900 Ohm
Resistance at 50 °C [122 °F] (approx.):	890 Ohm
Ratio of resistance 0 °C/50 °C:	4.95 to 6.95
Beta nominal at 25 °C:	3000 K
Temperature coefficient at 25 °C:	-3.4 %/°C
Time constant (TC) still air max.:	1 s
Dissipation constant (DC) still air min.:	0.16 mW/°C
DC helium:	0.5 mW/°C
Power rating (air):	15 mW
Power rating (helium):	60 mW
Max. ambient temperature:	100 °C [212 °F]
Max. operating temperature (including self-heat):	150 °C [302 °F]
Resisistance at max. operating temperature:	88 Ohm

5 % resistance at 25 °C [77 °F]

DESCRIPTION	REFERENCE
Two 111-202CAK-H01 each mounted on a glass hermetic seal and matched in air to within 15 mV of each other at 5 mA, 10 mA and 15 mA.	115-202CDK-801

ICL Inrush Current Limiter Thermistors

ICL Inrush Current Limiter thermistors are a cost-effective way of limiting the inrush of current that may damage components in a switching power supply and in other power devices when the equipment is turned on. These devices have solderable leads and are PC board mountable.

Operating temperature range:	-40 °C to 185 °C [-40 °F to 365 °F]
Maximum steady state current:	1 A to 30 A
Encapsulation:	Black silicone
Lead material:	Tinned copper
Dissipation constant (DC):	12.7 mW/°C to 23 mW/°C
Time constant (TC):	32 s to 93 s
Resistance range at 25 °C [77 °F]:	0.5 Ohm to 220 Ohm ±20 %
Resistance at max. steady state current:	0.01 Ohm to 2.34 Ohm
Max. diameter:	9,5 mm [0.374 in] to 32.0 mm [1.260 in]
Max. thickness:	5,0 mm [0.204 in] to 8.0 mm [0.327 in]
Lead diameter:	0,8 mm [0.032 in] to 1.0 mm [0.040 in]

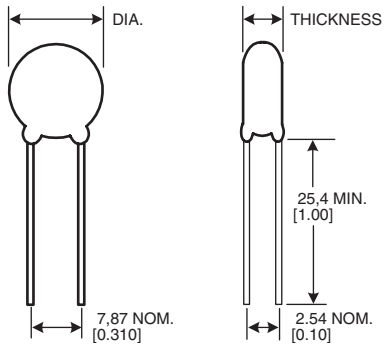

OHM	MAX. STEADY STATE CURRENT (A)	RESISTANCE AT MAX. STEADY STATE CURRENT (OHM)	REFERENCE
0.5	30	0.01	ICL32OR530-01
1	20	0.02	ICL221R020-01
1	30	0.02	ICL321R030-01
2	18	0.03	ICL222R018-01
2.5	8	0.07	ICL152R508-01
2.5	8	0.06	ICL122R508-01
2.5	15	0.03	ICL222R515-01
5	6	0.1	ICL155R006-01
5	7	0.07	ICL155R007-01
10	2	0.3	ICL1010002-01
10	3.2	0.18	ICL1010004-01
10	5	0.13	ICL1210005-01
10	6	0.15	ICL1510006-01
10	8	0.1	ICL2210008-01
12	4	0.26	ICL1512004-01
16	4	0.27	ICL1516004-01
20	2	0.5	ICL1220002-01
40	2	0.6	ICL1240002-01
50	2	0.72	ICL1250002-01
80	2.5	0.75	ICL1580003-01
120	3	0.9	ICL2212103-01
220	2	0.8	ICL1522102-01

Temperature Sensors - Probes

Temperature Sensor Probes are finished thermistor assemblies complete with thermistor housing, extension leads and usually a connector. A variety of customized packages are available.

NOTE: The products in this section do not follow the "how to use this catalogue" instructions provided in the catalogue introduction. Specific reference numbers are not given due to their custom nature. Please contact your local Honeywell sales office for ordering information.

ES120 Series Coolant/Oil Temperature Sensor Probes

The ES120 probe is a thermistor mounted into a plastic lead frame and assembled into a metal body. This subassembly is then overmolded to produce both the electrical connection system and the hexagonal shape for easy installation. The all-plastic design reduces heat loss through the sensor, thereby reducing wind chill effects.

Operating temperature range: -40 °C to 155 °C [-40 °F to 311 °F]
Encapsulation: NTC (Negative Temperature Coefficient) encapsulated in thermal epoxy
Lead material: Terminals are 2,8 mm x 0,8 mm [0.11 in x 0.03 in] brass with a copper flash protection layer with final plating to customer requirement (silver, tin, gold, etc.)
Dissipation constant: Tor values (time to reach 63.2 % of the difference between two temperatures) are typically 19 s rising temperature and 14 s falling temperature
Time constant: None
Resistance range at 25 °C [77 °F] 2.5 kOhm at 20 °C [68 °F] ±5 %

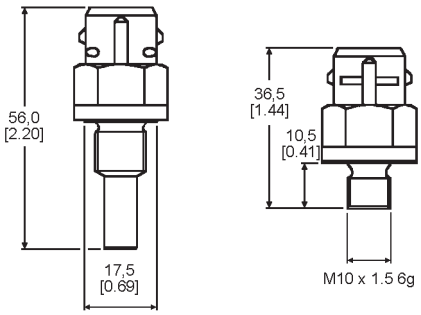

SERIES NAME
ES120 Coolant/Oil Temperature Sensor Probe

ES110 Series Inlet Air Temperature Sensor Probes

The ES110 probe is a thermistor mounted into a plastic lead frame and assembled into a metal body. This subassembly is then overmolded to produce both the electrical connection system and the hexagonal shape for easy installation. Two end configurations are available depending upon response required or degree of protection. The all-plastic design reduces heat loss through the sensor, thereby reducing wind chill effects.

Operating temperature range: -40 °C to 155 °C [-40 °F to 311 °F]
Encapsulation: Standard NTC (Negative Temperature Coefficient) epoxy protection
Lead material: Terminals are 2,8 mm x 0,8 mm [0.11 in x 0.03 in] brass with a copper flash protection layer with final plating to customer requirement (silver, tin, gold, etc.)
Dissipation constant: 0.85 mW/°C in still air at 25 °C [77 °F]
Time constant: 1 s in liquids, 12 s max. in still air
Resistance range at 25 °C [77 °F] 2.5 kOhm at 20 °C [68 °F] ±5 %

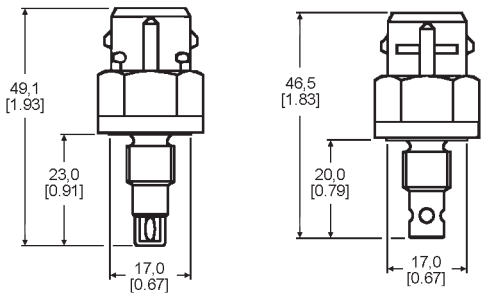

SERIES NAME
ES110 Inlet Air Temperature Sensor Probe

Air Conditioning Temperature Sensor Probes

A fully overmolded and protected sensor incorporating a specially developed NTC (Negative Temperature Coefficient) to withstand many very aggressive, damp operating conditions. The housing is snap fit promoting easy assembly.

Operating temperature range: -30 °C to 100 °C [-22 °F to 212 °F]
Encapsulation: Special NTC epoxy coating
Lead material: Terminals are 2,8 mm x 0,8 mm [0.11 in x 0.03 in] brass with a copper flash protection layer with final plating to customer requirement (silver, tin, gold, etc.)
Dissipation constant: 2.5 mW/°C in still air
Time constant: 2 s in water, 15 s max. in still air
Resistance range at 25 °C [77 °F]: 9 kOhm at 0 °C [32 °F] ±1.5 %

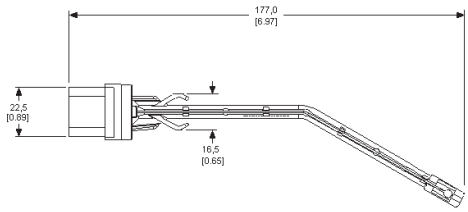

NAME
Air Conditioning Temperature Sensor Probe

Earth Return (Ground) Temperature Sensor Probes

An all-metal temperature sensor, with the body being the ground, incorporating a flat disc thermistor held flush on the base of the body by a spring-loaded pressure pad. This sensor provides a quick response to small variations in high temperature changes.

Operating temperature range: -40 °C to 155 °C [-40 °F to 311 °F]
Encapsulation: NTC (negative temperature coefficient) encapsulated in a silicone paste
Lead material: Standard Lucar type or other variations
Dissipation constant: 3 mW/°C in still air
Time constant: 10 s in automotive coolant
Resistance range at 25 °C [77 °F]: Per customer requirements

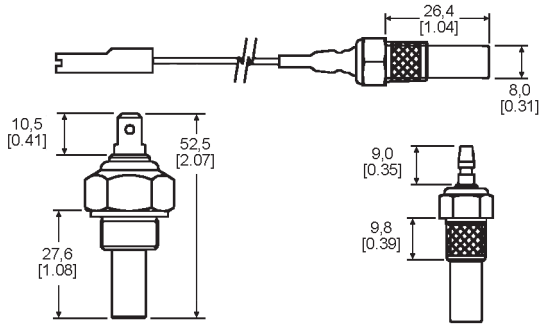

NAME
Earth Return (Ground) Temperature Sensor Probe

Refrigerant Temperature Sensor Probes

A fully sealed, quick response temperature sensor suitable for use in many HVAC systems.

Operating temperature range: -40 °C to 140 °C [-40 °F to 284 °F]
Encapsulation: NTC (Negative Temperature Coefficient) encapsulated in a thermal heat paste
Lead material: Terminals are 1,5 mm x 0,6 mm [0.06 in x 0.02 in] brass with a copper flash protection layer with final plating to customer requirement (silver, tin, gold, etc.)
Dissipation constant: Tor values (time to reach 63.2 % of the difference between two temperatures) are typically 10 s rising temperature and 6 s falling temperature
Time constant: None
Resistance range at 25 °C [77 °F]: 2.5 kOhm at 20 °C [68 °F], calibrated at ±3 % at 100 °C [212 °F]

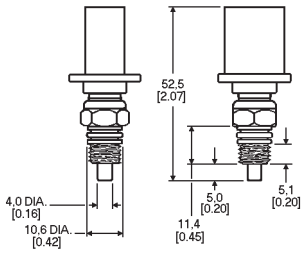

NAME
Refrigerant Temperature Sensor Probe

Surface Temperature Sensor Probes

Sensor assembly is designed to have good heat conductivity between the thermistor element and the area to be monitored. Time response is consistent with the thermal conductivity of the surface being measured. Multiple configurations allow sensor to be mounted, bolted, riveted or attached adhesively.

Operating temperature range: -60 °C to 150 °C [-76 °F to 302 °F]
Encapsulation: Thermally conductive epoxy used to pot discrete component into surface-style housing
Lead material: Insulated lead wires and terminals when required, other options available
Dissipation constant: 3.3 mW/°C to 12 mW/°C (varies with size and housing style)
Time constant: 1 s to 40 s (application dependent)
Resistance range at 25 °C [77 °F]: Per customer requirements

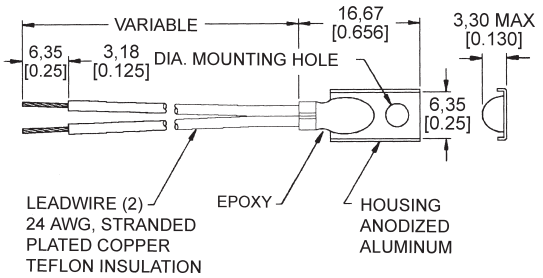

NAME
Surface Temperature Sensor Probe

Air/Gas Temperature Sensor Probes

Air/Gas probes contain an exposed thermistor element because gas is not as good a heat conductor or thermal sink as a liquid, and because time response is normally an important consideration. The sensor housing may be composed of plastic or other thermally conductive materials to reduce conduction and heat from the gas circulating around the thermistor. Multiple configurations allow easy mounting.

Operating temperature range: -60 °C to 150 °C [-76 °F to 302 °F]
Encapsulation: None, sensing element is exposed
Lead material: Insulated lead wires and terminals when required, other options available
Dissipation constant: 0.1 mW/°C to 3 mW/°C (design specific)
Time constant: 4 s to 150 s (application and design dependent)
Resistance range at 25 °C [77 °F]: Per customer requirements

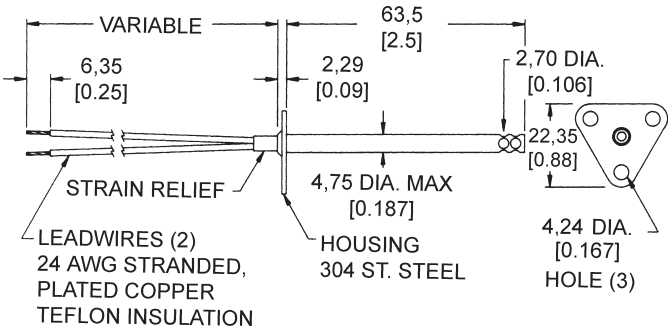

NAME
Air/Gas Temperature Sensor Probe

Immersion Temperature Sensor Probes

Custom designed and application specific, immersion probes are designed to be directly placed in the liquid medium to be measured. A large variety of housing alloys are available. Multiple configurations allow easy mounting.

Operating temperature range: -60 °C to 300 °C [-76 °F to 572 °F]
Encapsulation: NTC (Negative Temperature Coefficient) encapsulated in housing appropriate to the application
Lead material: Insulated lead wires and terminals when required, other options available
Dissipation constant: 5 mW/°C to 10 mW/°C (varies with size and housing style)
Time constant: 1 s to 12 s (design dependent)
Resistance range at 25 °C [77 °F] Per customer requirements

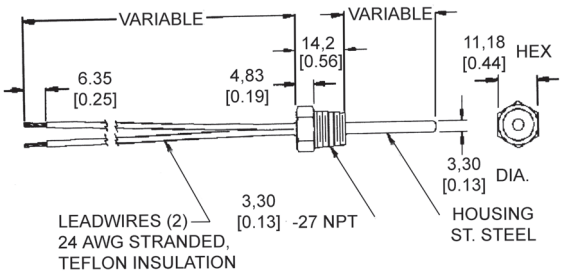

NAME
Immersion Temperature Sensor Probe

Thermal Cutoffs

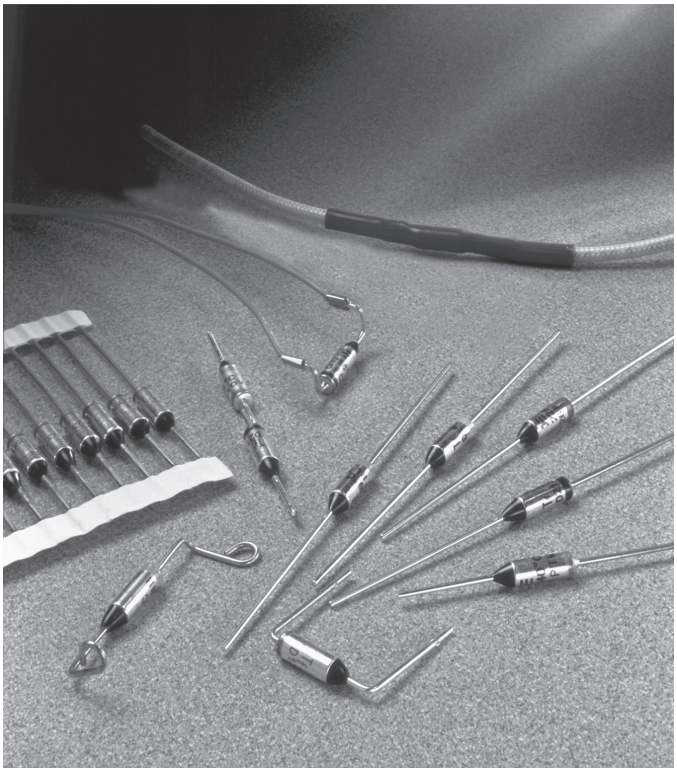

Thermal Cutoffs include products for use in a wide array of small appliances, major appliances, office copy machines, automotive and HVAC equipment. These devices are available in various lead lengths and configurations. Honeywell offers versions that are compliant with European Directive 2002/95/EC, otherwise known as RoHS (Restriction of Hazardous Substances), in electrical and electronic equipment.

NOTE: The products in this section do not follow the "how to use this catalogue" instructions provided in the catalogue introduction. Specific reference numbers are not given due to their custom nature. Please contact your local Honeywell sales office for ordering information.

NOTICE

- To maximize product life, use a 30 °C [86 °F] min. differential between the operating ambient temperature at the fuse location and the specified functioning temperature of the fuse being used. Maintain a 40 °C [104 °F] min. differential between devices with functioning temperatures above 200 °C [392 °F].
- Under no condition should the thermal cutoff be exposed to a continuous normal temperature rating in excess of 200 °C [392 °F]. Only proper testing of the above will determine the selected thermal cutoff's suitability within the application.

D Series

The D Series responds to temperature by interrupting an electrical circuit when the operating and/or environmental temperature exceeds the thermal rating of the fuse. This is accomplished when the organic pellet experiences a phase change, allowing the spring activated contacts to permanently open the circuit.

Operating temperature range: 72 °C to 240 °C [162 °F to 464 °F]
Environmental exposure range: see notice

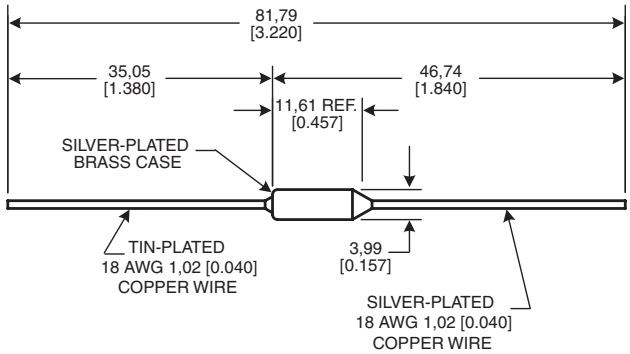

NAME
DXXX-002

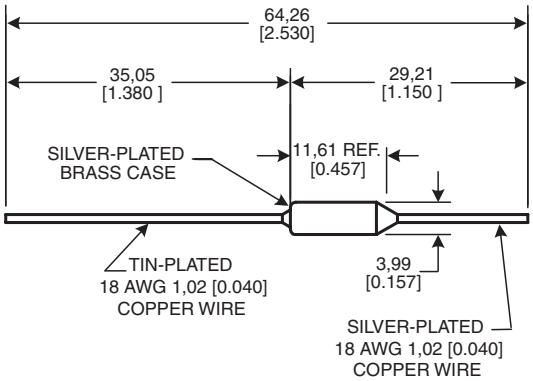

NAME
DXXX-001

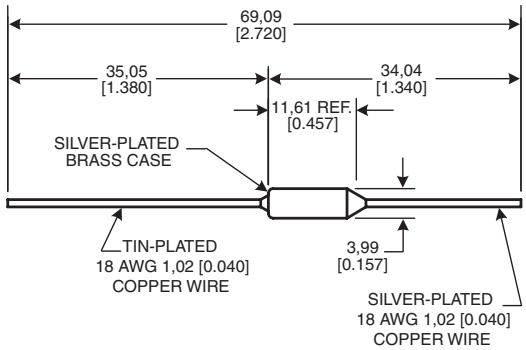

NAME
DXXX-003

RD Series

The RD Series responds to temperature by interrupting an electrical circuit when the operating and/or environmental temperature exceeds the thermal rating of the fuse. This is accomplished when the organic pellet experiences a phase change, allowing the spring activated contacts to permanently open the circuit.

The electrical resistance of an RD Series thermal cutoff is comparable to that found in an equal length of 18 gage solid copper wire. With proper heat flow, heat generation below 15 A is minimal. Above 15 A, the upper limit on current capacity will depend on the environment for each specification.

Operating temperature range: 72 °C to 240 °C [162 °F to 464 °F]
Environmental exposure range: see notice on previous page

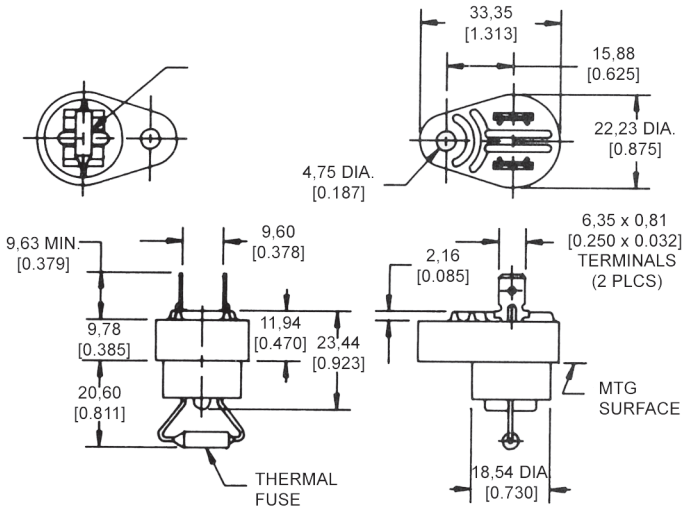

NAME
RDXXX-001

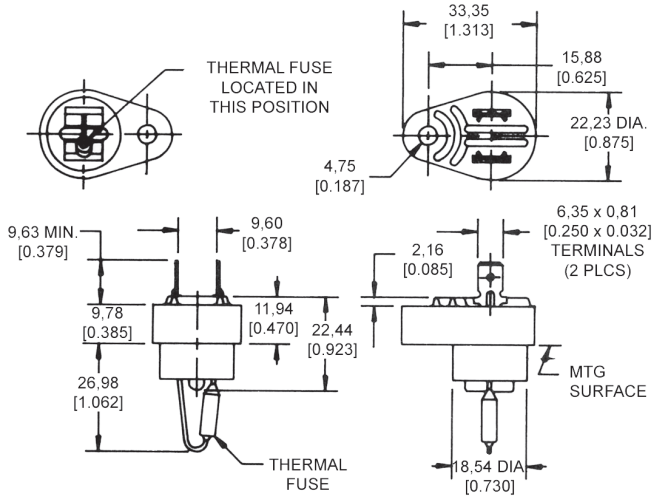

NAME
RDXXX-002

Thermostats - Redi-Temp®

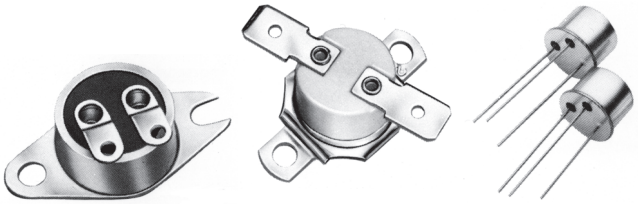

Redi-Temp® is a line of standard thermostat products offered in a range of pre-set temperatures. These products are available standard for immediate delivery. They are often useful for low-volume applications where standard configurations are acceptable, as well as for evaluating new designs and prototypes.

3455RC 15 A High Temperature Universal Thermostat Series

Shipped from stock, the 3455RC Series thermostats are often suitable for applications such as copy machines, power supplies, telecommunications and ovens. UL, CSA and European approval agencies listings available.

Electrical rating:	15 A resisitive max., 120 Vac
Housing material:	High density ceramic base
Operating temperature range:	0 °C to 150 °C [32 °F to 302 °F]
Environmental exposure range:	-18 °C to 288 °C [0 °F to 550 °F]

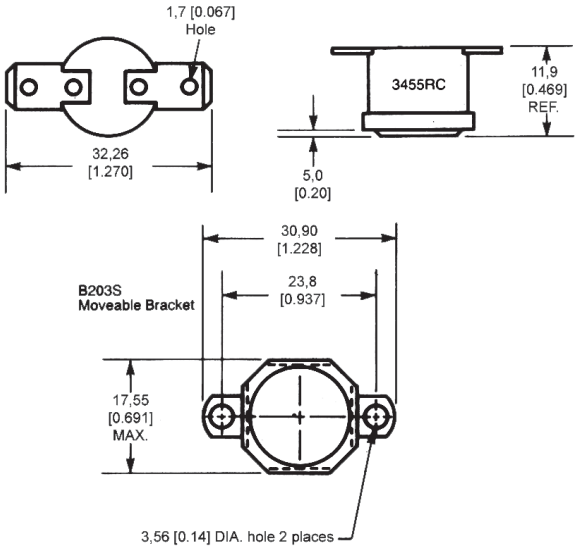

Open on rise

OPEN/CLOSE °F	OPEN/CLOSE °C	REFERENCE
65 ±5/30 ±8	18 ±3/-1 ±5	3455RC-100-220
75 ±5/40 ±8	24 ±3/4 ±5	3455RC-100-221
85 ±5/55 ±8	29 ±3/13 ±5	3455RC-100-222
95 ±5/65 ±8	35 ±3/18 ±5	3455RC-100-223
105 ±5/75 ±8	41 ±3/24 ±5	3455RC-100-224
115 ±5/85 ±8	46 ±3/29 ±5	3455RC-100-225
125 ±5/95 ±8	52 ±3/35 ±5	3455RC-100-226
135 ±5/105 ±8	57 ±3/41 ±5	3455RC-100-227
145 ±5/115 ±8	63 ±3/46 ±5	3455RC-100-228
155 ±5/125 ±8	68 ±3/52 ±5	3455RC-100-229
165 ±5/135 ±8	73 ±3/57 ±5	3455RC-100-230
175 ±5/145 ±8	79 ±3/63 ±5	3455RC-100-231
185 ±5/155 ±8	85 ±3/68 ±5	3455RC-100-232
195 ±5/165 ±8	91 ±3/73 ±5	3455RC-100-233
205 ±6/175 ±8	96 ±4/79 ±5	3455RC-100-234
215 ±6/185 ±8	102 ±4/85 ±5	3455RC-100-235
225 ±6/195 ±8	107 ±4/91 ±5	3455RC-100-236
235 ±6/205 ±8	113 ±4/96 ±5	3455RC-100-237
245 ±6/215 ±8	118 ±4/102 ±5	3455RC-100-238
255 ±7/225 ±8	124 ±4/107 ±5	3455RC-100-239
275 ±7/245 ±8	135 ±4/118 ±5	3455RC-100-240
295 ±7/265 ±8	146 ±4/129 ±5	3455RC-100-241
315 ±10/275 ±15	157 ±6/135 ±8	3455RC-100-242

Close on rise

CLOSE/OPEN °F	CLOSE/OPEN °C	REFERENCE
70 ±8/35 ±5	21 ±5/2 ±3	3455RC-100-243
90 ±8/60 ±5	32 ±5/16 ±3	3455RC-100-244
110 ±8/80 ±5	43 ±5/27 ±3	3455RC-100-245
130 ±8/100 ±5	54 ±5/38 ±3	3455RC-100-246
150 ±8/120 ±5	66 ±5/49 ±3	3455RC-100-247
170 ±8/140 ±5	77 ±5/60 ±3	3455RC-100-248
190 ±8/160 ±5	88 ±5/71 ±3	3455RC-100-249
210 ±8/180 ±6	99 ±5/82 ±4	3455RC-100-250
230 ±8/200 ±6	110 ±4/93 ±4	3455RC-100-251

3100 SPST Hermetic Thermostat Series

Shipped from stock, the 3100 Series thermostats are often suitable for applications such as computers, medical electronics, power supplies, industrial controls and test equipment. They feature a laser-welded hermetic seal, are pre-set and tamper-proof. UL listings available.

Electrical rating: 30 A resisitive max., 120 Vac/240 Vac
Environmental exposure range: -62 °C to 288 °C [-80 °F to 550 °F]

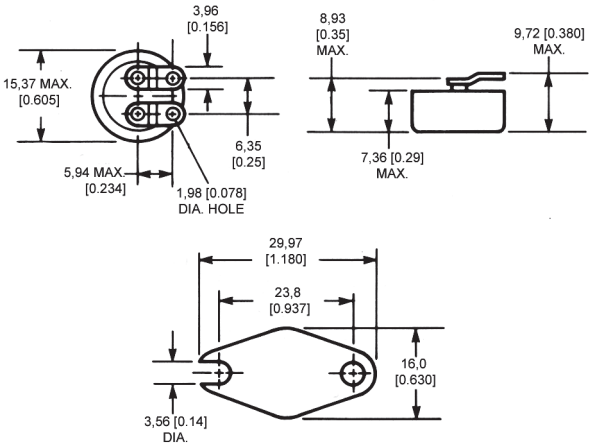

Open on rise

OPEN/CLOSE °F	OPEN/CLOSE °C	REFERENCE
40 ±5/20 ±5	4 ±3/-7 ±3	3100U-3-1431
50 ±5/30 ±5	10 ±3/-1 ±3	3100U-3-1432
60 ±5/40 ±5	16 ±3/4 ±3	3100U-3-1433
70 ±5/50 ±5	21 ±3/10 ±3	3100U-3-1434
80 ±5/60 ±5	27 ±3/16 ±3	3100U-3-1435
90 ±5/70 ±5	32 ±3/21 ±3	3100U-3-1436
100 ±5/80 ±5	38 ±3/27 ±3	3100U-3-1437
110 ±5/90 ±5	43 ±3/32 ±3	3100U-3-1438
120 ±5/100 ±5	49 ±3/38 ±3	3100U-3-1439
130 ±5/110 ±5	54 ±3/43 ±3	3100U-3-1440
140 ±5/120 ±5	60 ±3/49 ±3	3100U-3-1441
150 ±5/130 ±5	66 ±3/54 ±3	3100U-3-1442
160 ±5/140 ±5	71 ±3/60 ±3	3100U-3-1443
170 ±5/150 ±5	77 ±3/66 ±3	3100U-3-1444
180 ±5/160 ±5	82 ±3/71 ±3	3100U-3-1445
190 ±5/170 ±5	88 ±3/77 ±3	3100U-3-1446
200 ±5/180 ±5	93 ±3/82 ±3	3100U-3-1447
210 ±8/185 ±6	99 ±5/85 ±4	3100U-3-1448
220 ±8/195 ±6	104 ±5/91 ±4	3100U-3-1449
230 ±8/205 ±6	110 ±5/96 ±4	3100U-3-1450
240 ±8/215 ±6	116 ±5/102 ±4	3100U-3-1451
250 ±8/225 ±6	121 ±5/107 ±4	3100U-3-1452

Close on rise

CLOSE/OPEN °F	CLOSE/OPEN °C	REFERENCE
40 ±5/20 ±5	4 ±3/-7 ±3	3100U-3-1453
50 ±5/30 ±5	10 ±3/-1 ±3	3100U-3-1454
60 ±5/40 ±5	16 ±3/4 ±3	3100U-3-1455
80 ±5/60 ±5	27 ±3/16 ±3	3100U-3-1456
100 ±5/80 ±5	38 ±3/27 ±3	3100U-3-1457
120 ±5/100 ±5	49 ±3/38 ±3	3100U-3-1458
140 ±5/120 ±5	60 ±3/49 ±3	3100U-3-1459
160 ±5/140 ±5	71 ±3/60 ±3	3100U-3-1460
180 ±5/160 ±5	82 ±3/71 ±3	3100U-3-1461
200 ±5/180 ±5	93 ±3/82 ±3	3100U-3-1462
220 ±6/195 ±8	104 ±4/91 ±5	3100U-3-1463

3600 Series Subminiature Thermostats TO-5 Package

Shipped from stock, the 3600 Series thermostats feature logic-level switching with gold contacts, have no power budget and are wave solderable with a hermetic seal. They are often suitable for applications such as power supplies, logic boards, telecommunications, medical electronics and robotics.

Electrical rating: 15 A resisitive max., 120 Vac
Dielectric strength: 500 Vac, 60 Hz for 1 s
Operating temperature range: -40 °C to 100 °C [-40 °F to 212 °F]
Environmental exposure range: -50 °C to 177 °C [58 °F to 351 °F]

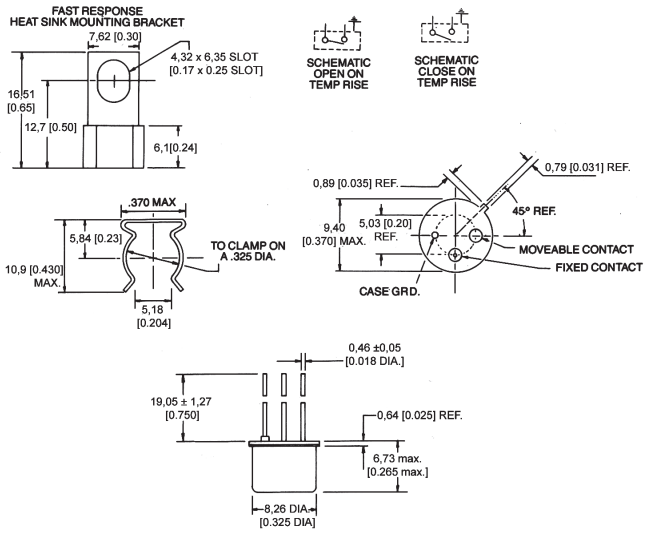

Open on rise

OPEN/CLOSE °C	MIN DIFF. °C	REFERENCE
40 ±5	2	3600040010001
45 ±5	2	3600045010001
50 ±5	2	3600050010001
55 ±5	5	3600055010001
60 ±5	5	3600060010001
65 ±5	5	3600065010001
70 ±5	5	3600070010001
75 ±5	5	3600075010001
80 ±5	5	3600080010001
85 ±5	7	3600085010001
90 ±5	7	3600090010001
95 ±5	7	3600095010001
100 ±5	7	3600100010001

Close on rise

OPEN/CLOSE °C	MIN DIFF. °C	REFERENCE
40 ±7	2	3601040010001
45 ±7	2	3601045010001
50 ±7	2	3601050010001
55 ±7	5	3601055010001
60 ±7	5	3601060010001
65 ±7	5	3601065010001
70 ±7	5	3601070010001
75 ±7	5	3601075010001
80 ±7	5	3601080010001
85 ±7	7	3601085010001
90 ±7	7	3601090010001
95 ±7	7	3601095010001
100 ±7	7	3601100010001

Thermostats - Commercial

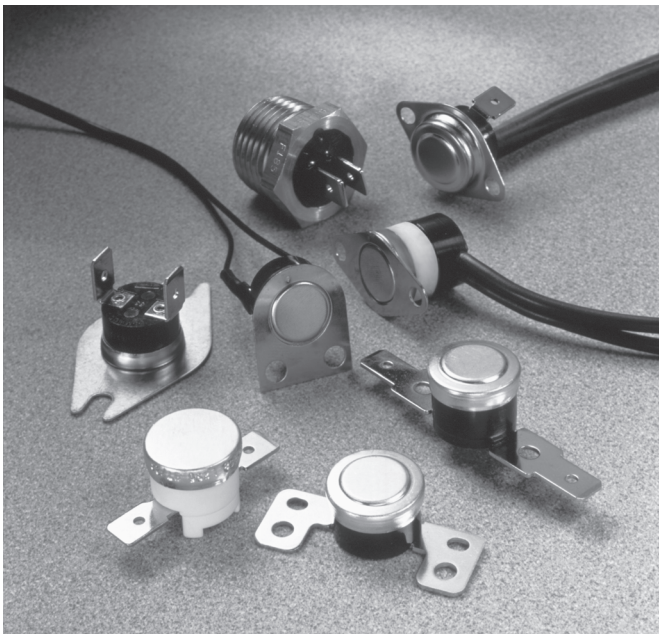

Commercial thermostats include products for use in a wide array of small and major appliances, automotive applications, office copy machines, heat and smoke detectors and HVAC equipment. These snap-action thermostats include automatic or manual reset options, phenolic or ceramic housings, and a variety of mounting brackets and terminal options.

NOTE: The products in this section do not follow the "how to use this catalogue" instructions provided in the catalogue introduction. Specific reference numbers are not given due to their custom nature. Please contact your local Honeywell sales office for ordering information.

NOTICE

Limitations: Type 2455RM/2450CM is intended as a manual reset control. It is not to be used on applications where a limit thermostat is required unless backup protection is provided. Units have been tested by UL for 1,000 cycles under load, 5,000 cycles no load, and are not considered limit devices.

⚠WARNING

PERSONAL INJURY

Do not use the bi-metallic, snap action thermostat components as final safety devices in any application. Their intended use is to provide an electrical disruption in the application circuit in the event of a change in temperature conditions.

Failure to comply with these instructions could result in death or serious injury.

2450R/2450HR/2455R Series Phenolic Automatic Reset Thermostats

A temperature-sensitive bimetal disc, electrically isolated from the switch, actuates the normally closed contacts. The contacts open when the surface or ambient temperatures increase to the operating snap point of the calibrated disc. Response to temperature changes is extremely rapid due to the inherently low mass of the disc and the small size of the product. These products are factory calibrated to the customer's specification.

Reset type:	Automatic
Amperage capacity:	15 A resistive max.
Housing material:	Phenolic
Operating temperature range:	0 °C to 150 °C [32 °F to 302 °F]
Environmental exposure range:	0 °C to 150 °C [32 °F to 302 °F]

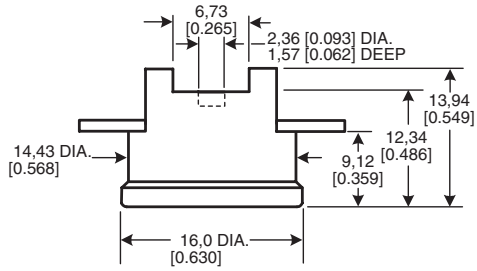

SERIES NAME
2450HR Phenolic Automatic Reset Thermostat

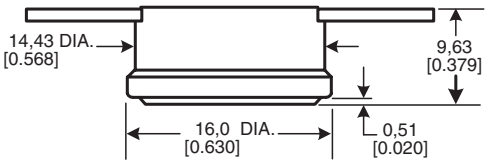

SERIES NAME
2450R Phenolic Automatic Reset Thermostat

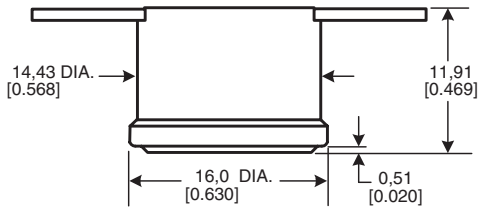

SERIES NAME
2455R Phenolic Automatic Reset Thermostat

2450RC/2450RCH/2455RC Series Ceramic Automatic Reset Thermostats

A temperature-sensitive bimetal disc, electrically isolated from the switch, actuates the normally closed contacts. The contacts open when the surface or ambient temperatures increase to the operating snap point of the calibrated disc. Response to temperature changes is extremely rapid due to the inherently low mass of the disc and the small size of the product.

Reset type:	Automatic
Amperage capacity:	15 A resistive max.
Housing material:	Ceramic
Operating temperature range:	0 °C to 260 °C [32 °F to 500 °F]
Environmental exposure range:	-20 °C to 287 °C [0 °F to 550 °F]

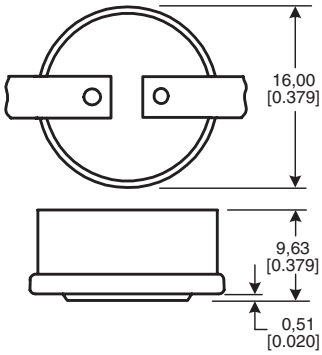

SERIES NAME
2450RC Ceramic Automatic Reset Thermostat

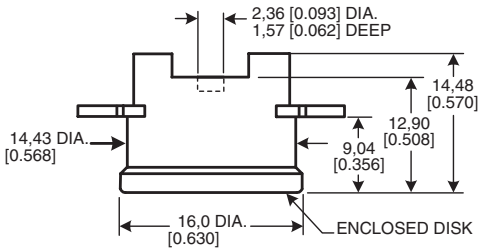

SERIES NAME
2450RCH Ceramic Automatic Reset Thermostat

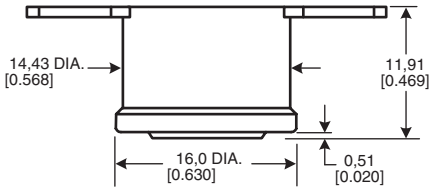

SERIES NAME
2455RC Ceramic Automatic Reset Thermostat

2450CM/2455RM Series Ceramic and Phenolic Manual Reset Thermostats

A temperature-sensitive bimetal disc, electrically isolated from the switch, actuates the normally closed contacts. The contacts open when the surface or ambient temperatures increase to the operating snap point of the calibrated disc. The circuit will stay open above room ambient temperature until the manual reset button is pressed. Response to temperature changes is extremely rapid due to the inherently low mass of the disc and the small size of the product.

Reset type:	Manual
Amperage capacity:	15 A resistive max.
Housing material:	Ceramic or phenolic
Operating temperature range:	52 °C to 232 °C [125 °F to 450 °F] (ceramic) 52 °C to 150 °C [125 °F to 302 °F] (phenolic)
Environmental exposure range:	10 °C to 260 °C [50 °F to 500 °F] (ceramic) 10 °C to 150 °C [50 °F to 302 °F] (phenolic)

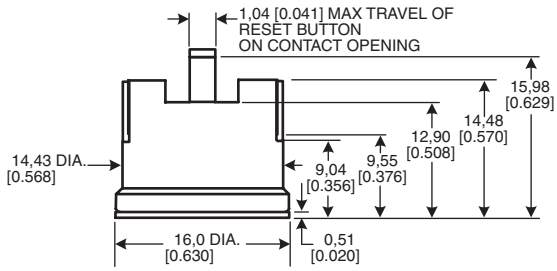

SERIES NAME
2450CM Ceramic Manual Reset Thermostat

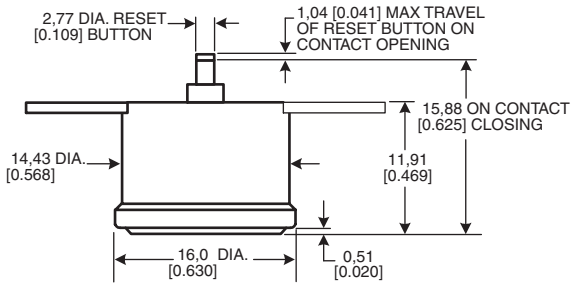

SERIES NAME
2455RM Phenolic Manual Reset Thermostat

2450A/2455RA Series Heat Detection Thermostats

The gold contacts open or close on a temperature rise of 47 ˚C to 107 ˚C [117 ˚F to 225 ˚F].

Reset type: Automatic
Amperage capacity: 15 A resistive max.
Housing material: Phenolic, epoxy-sealed cap and terminals
Operating temperature range: 47 °C to 107 °C [117 °F to 225 °F]
Environmental exposure range: 0 °C to 150 °C [32 °F to 302 ° F]

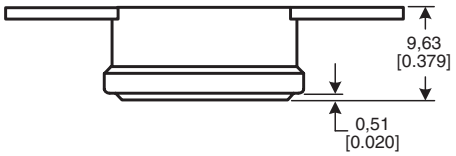

SERIES NAME
2450A Heat Detection Thermostat

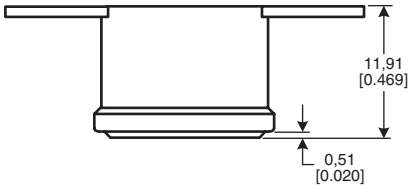

SERIES NAME
2455A Heat Detection Thermostat

2455RBV Series Overmolded Automatic Reset Thermostats

A temperature-sensitive bimetal disc, electrically isolated from the switch, actuates the normally closed contacts. The contacts open when the surface or ambient temperatures increase to the operating snap point of the calibrated disc. Response to temperature changes is extremely rapid due to the inherently low mass of the disc and the small size of the product.

Reset type: Automatic
Amperage capacity: 15 A resistive max.
Housing material: Ceramic or phenolic, epoxy overmold
Operating temperature range: -12 °C to 105 °C [10 °F to 221 °F]
Environmental exposure range: -18 °C to 121 °C [0 °F to 250 °F]

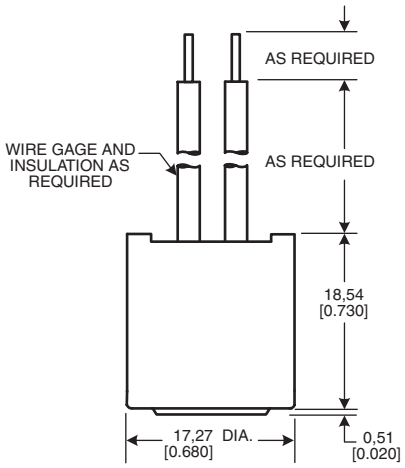

SERIES NAME
2455RBV Overmolded Automatic Reset Thermostat

2450R/2450RCH/2455R/2455RCH/ 2467RC/2467RCH Series "One-shot" ½ in Thermostats

Products are designed for high limit applications where automatic reset is not desired.

Reset type: None
Amperage capacity: 15 A resistive max.
21 A resistive max. (2467RC/2467RCH Series)
Housing material: ceramic or phenolic, with or without epoxy-sealed cap and terminal
Operating temperature range: 52 °C to 260 °C [125 °F to 500 °F] (ceramic)
52 °C to 250 °C [125 °F to 500 °F] (ceramic) (2467RC Series)
52 °C to 150 °C [125 °F to 302 °F] (phenolic)
Environmental exposure range: -18 °C to 316 °C [0 °F to 600 °F] (ceramic)
-18 °C to 150 °C [0 °F to 302 °F] (phenolic)

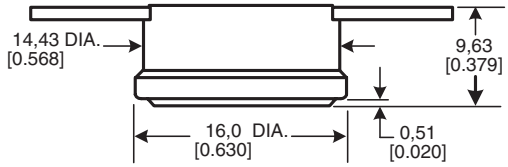

SERIES NAME
2450R Phenolic "One-shot" ½ in Thermostat

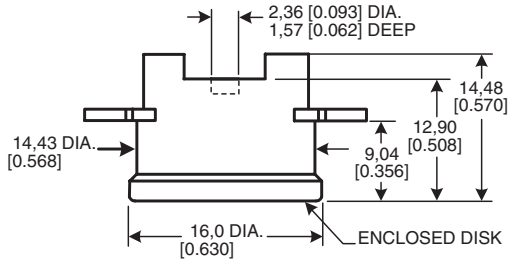

SERIES NAME
2450RCH Ceramic "One-shot" ½ in Thermostat
2467RCH Ceramic "One-shot" ½ in Thermostat

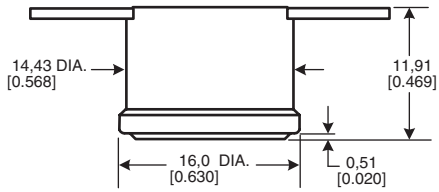

SERIES NAME
2455R Phenolic "One-shot" ½ in Thermostat

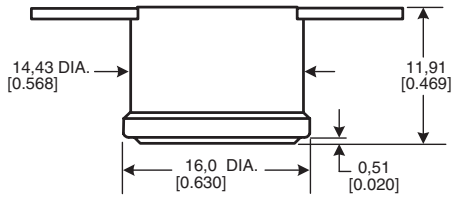

SERIES NAME
2455RC Ceramic "One-shot" ½ in Thermostat
2467RC Ceramic "One-shot" ½ in Thermostat

2450R Series Annular Ring Cap Automatic Reset Thermostats

A temperature-sensitive bimetal disc, electrically isolated from the switch, actuates the normally closed contacts. The contacts open when the surface or ambient temperatures increase to the operating snap point of the calibrated disc. Response to temperature changes is extremely rapid due to the inherently low mass of the disc and the small size of the product.

Reset type:	Automatic
Amperage capacity:	15 A resistive, 12 Vdc
Housing material:	Phenolic, can be partially or totally sealed against water ingress
Operating temperature range:	-10 °C to 55 °C [14 °F to 131 °F]
Environmental exposure range:	-40 °C to 130 °C [-40 °F to 266 °F]
Life cycle capability:	300 K at 12 Vdc, 10 A
Low temperature differential:	Down to 8 °C [46 °F]
Switch temperature tolerance:	±3 °C

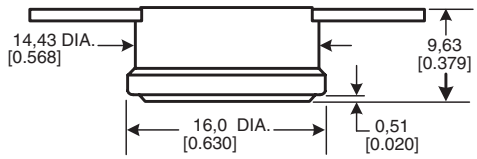

SERIES NAME
2450R Phenolic Annular Ring Cap Automatic Reset Thermostat

2450R/2455R Series Protected Thermostats

A temperature-sensitive bimetal disc, electrically isolated from the switch, actuates the normally closed contacts. The contacts open when the surface or ambient temperatures increase to the operating snap point of the calibrated disc. Basic thermostat is protected from the environment by sealing it in a metal housing or encapsulating it in epoxy.

Reset type:	Automatic
Amperage capacity:	15 A resistive, 12 Vdc
Housing material:	Brass, aluminium, stainless steel and epoxy
Operating temperature range:	15 °C to 130 °C [59 °F to 266 °F]
Environmental exposure range:	-40 °C to 155 °C [-40 °F to 311 °F]

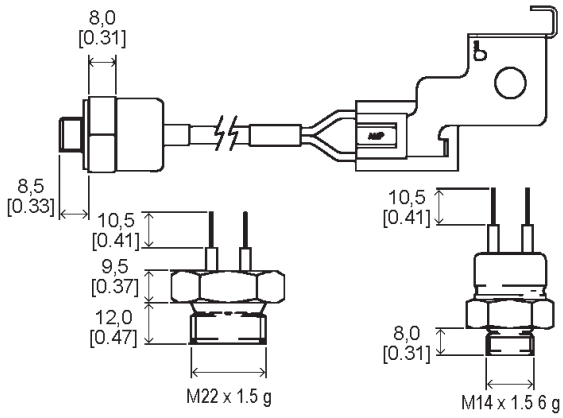

SERIES NAME
2450R Protected Thermostat
2455R Protected Thermostat

2450R Series Fully Sealed Thermostats

A temperature-sensitive bimetal disc, electrically isolated from the switch, actuates the normally closed contacts. The contacts open when the surface or ambient temperatures increase to the operating snap point of the calibrated disc. Response to temperature changes is extremely rapid due to the inherently low mass of the disc and the small size of the product.

Reset type:	Automatic
Amperage capacity:	15 A resistive, 12 Vdc
Housing material:	Phenolic housing, aluminium cap totally encapsulated in water-resistant epoxy
Operating temperature range:	-10 °C to 55 °C [14 °F to 131 °F]
Environmental exposure range:	-40 °C to 130 °C [-40 °F to 266 °F]
Life cycle capability:	300 K at 12 Vdc, 10 A
Low temperature differential:	Down to 8 °C [46 °F]
Switch temperature tolerance:	±3 °C

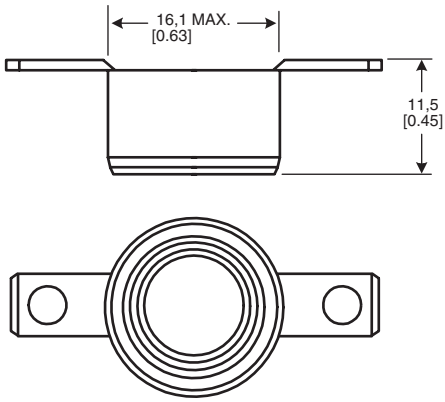

SERIES NAME
2450R Fully Sealed Thermostat

Standard Terminal Guide

Horizontal Solder

T-101

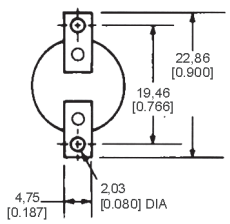

Vertical Solder Inside

T-106

Not avail on 55RM

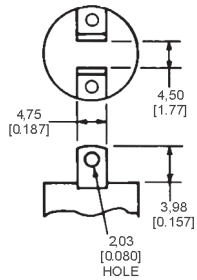

Vertical Solder Outside

T-107

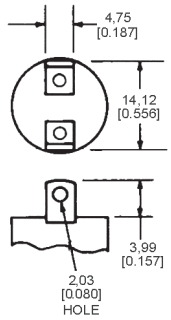

T-140

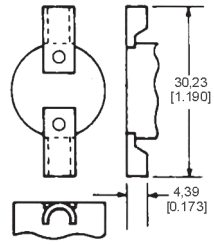

CRIMP TYPE TERMINAL
Specify wire gage, type and direction of crimp

1/4 in Quick Connect, Horizontal

T-146

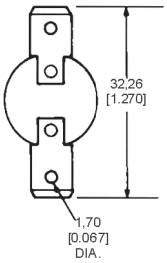

1/4 in Quick Connect, Vertical

T-147

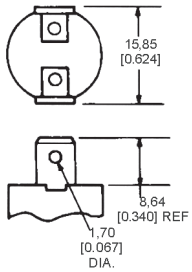

3/16 in Quick Connect, Flat

T-149

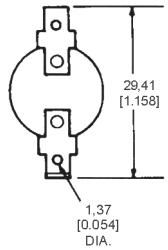

3/16 in Quick Connect Vertical

T-150

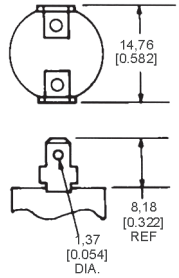

Special Terminals

T-102

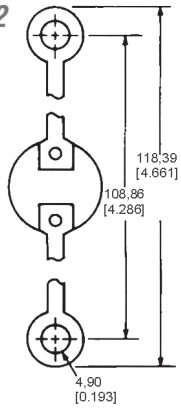

T-103

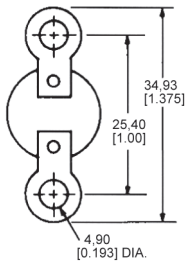

T-120

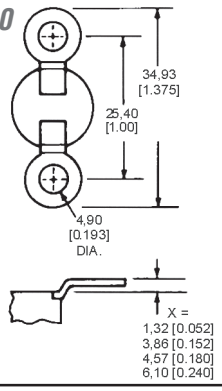

Specify Crimp Direction Up or Down

T-105

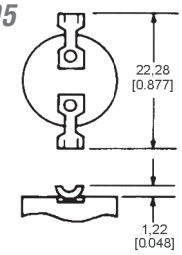

T-121

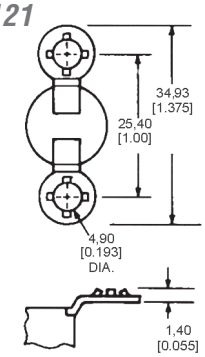

T-115

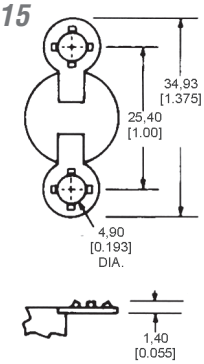

Standard Terminal Guide (continued)

Horizontal Weld Tab

T-141

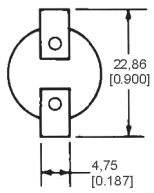

1/4 in Quick Connect, 45°

T-148

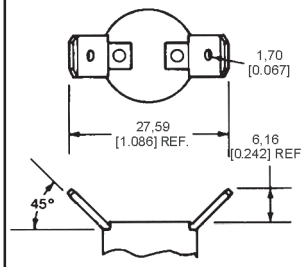

3/16 in Quick Connect, 45°

T-151

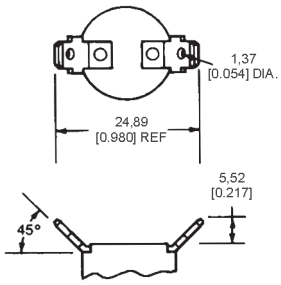

Spade Terminal

T-160

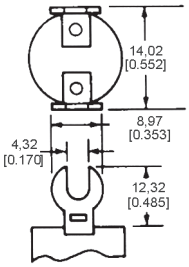

T-161

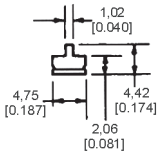

T-162

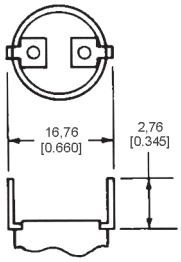

T-164

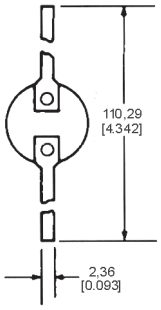

T-165

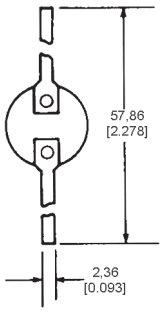

T-166

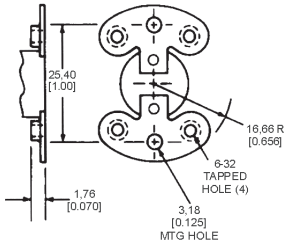

T-167

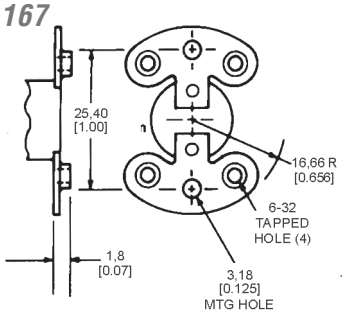

T-168

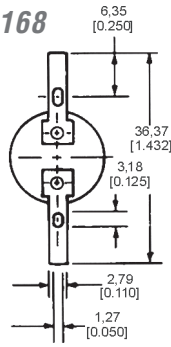

T-169

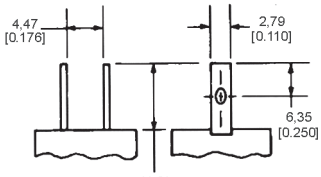

T-170

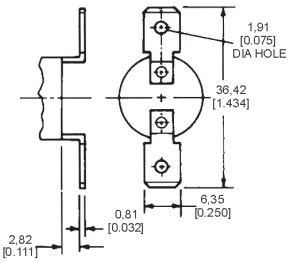

T-178

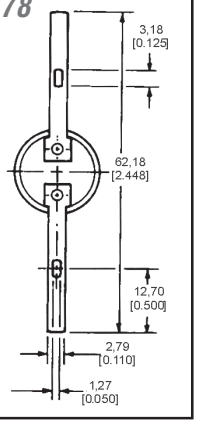

T-179

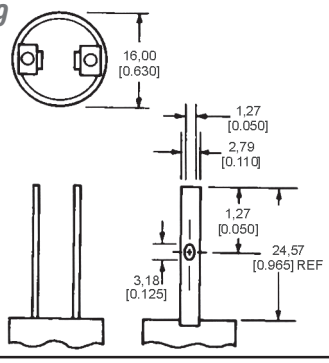

T-188

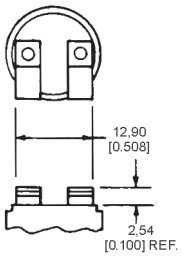

Standard Mounting Bracket Guide

Stationary Surface Brackets

B-201/B-201A/B-201B

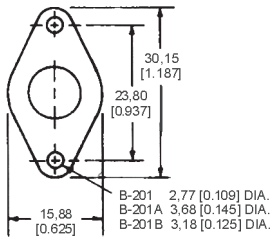

Moveable Surface Brackets

B-203/B-203A/B-203B

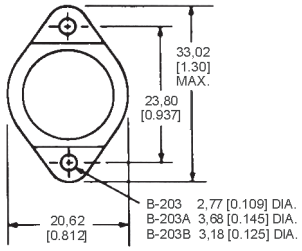

Air Stream Brackets

B205/B205A

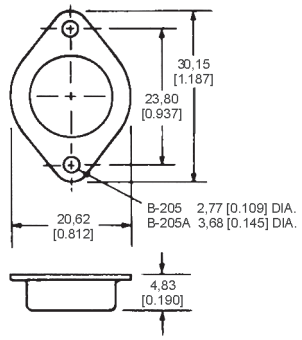

Special Mounting Brackets

B-206

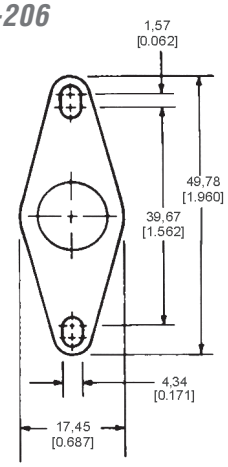

B-207

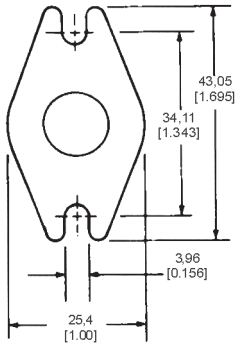

B-209

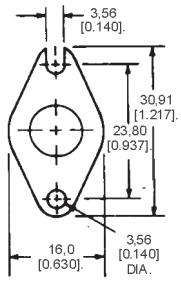

B-210

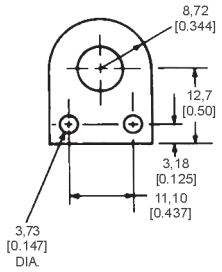

B-212/B-212A

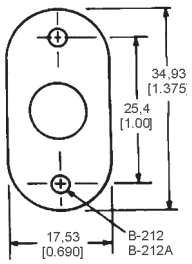

B-213

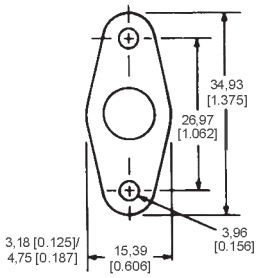

B-230

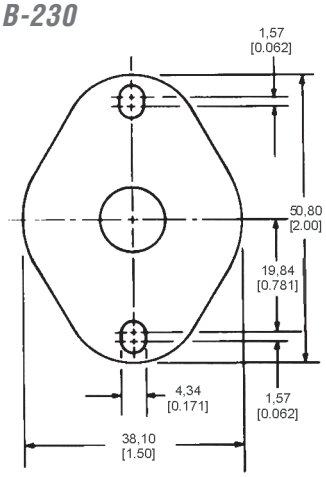

B-239

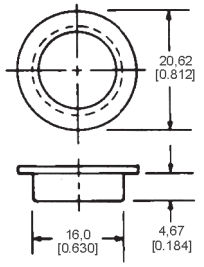

Standard Mounting Bracket Guide (continued)

B-246

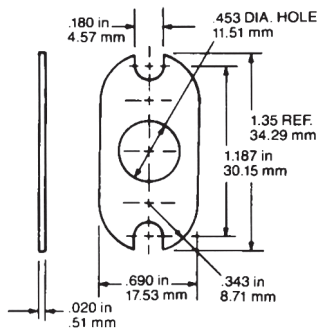

B-249

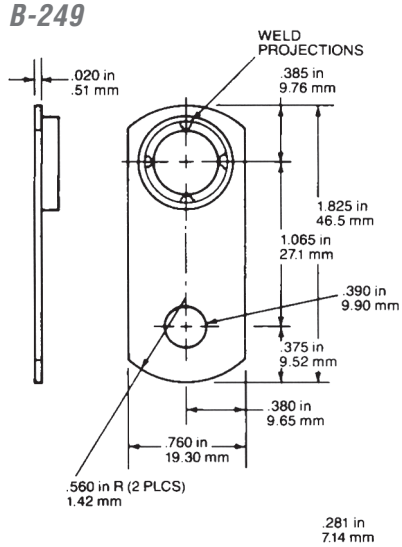

B-250

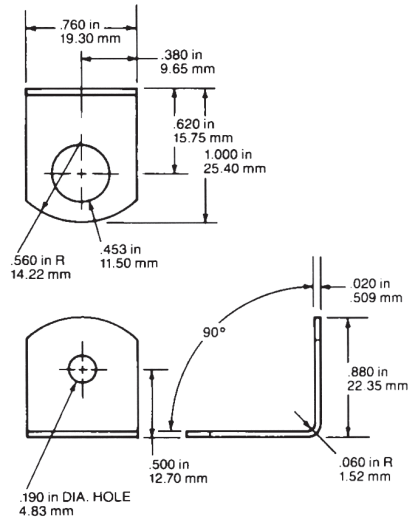

Mounting Studs

Brass Hex Stud Mount

B-220-B-227

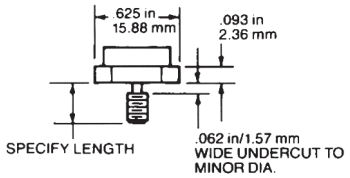

B-220	6-32
B-221	8-32
B-222	10-24
B-223	10-32
B-224	M3 × 0.5
B-225	M4 × 0.7
B-226	M5 × 0.8
B-227	M6 × 1.0

B-240

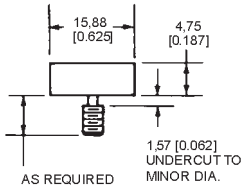

#6 - 32	M3 X 0.3
#8 - 32	M4 X 0.7
#10 - 24	M5 X 0.8
#10 - 32	M6 X 1.0

Bracket/Terminal Orientation (Intermediate angles available on specific request.)

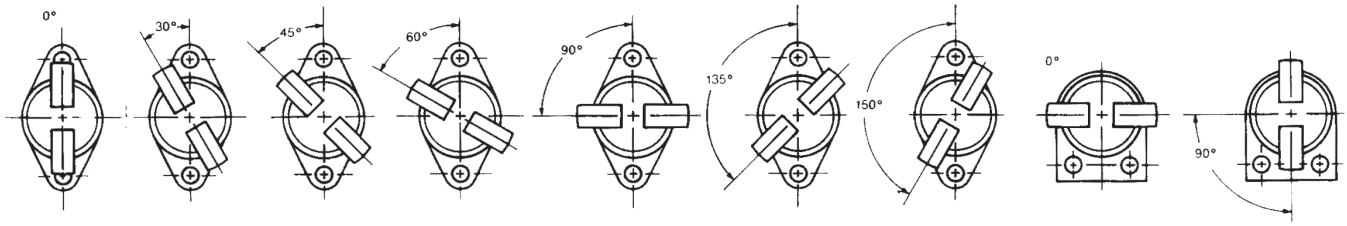

Thermostats - Precision

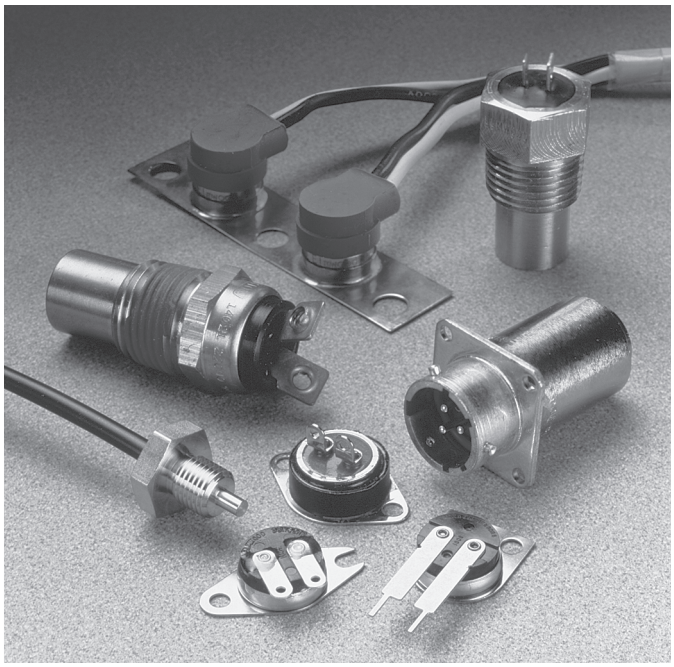

Precision snap-action thermostats include both hermetic and non-hermetic devices for use in a wide array of applications including computers, copy machines, aircraft, radar equipment, medical equipment and electronic control systems. We also offer custom-packaged thermostats for application flexibility and industrial-grade thermostats designed to operate in extreme environmental conditions.

NOTE: The products in this section do not follow the "how to use this catalogue" instructions provided in the catalogue introduction. Specific reference numbers are not given due to their custom nature. Please contact your local Honeywell sales office for ordering information.

NOTICE

Limitations: Type 3455RM/3450CM is intended as a manual reset control. It is not to be used on applications where a limit thermostat is required unless backup protection is provided. Units have been tested by UL for 1,000 cycles under load, 5,000 cycles no load, and are not considered limit devices.

⚠ WARNING
PERSONAL INJURY

Do not use the bi-metallic, snap action thermostat components as final safety devices in any application. Their intended use is to provide an electrical disruption in the application circuit in the event of a change in temperature conditions.

Failure to comply with these instructions could result in death or serious injury.

3001/3004 Series Non-Hermetic Thermostats

The 3001/3004 Series are factory pre-set, single pole, single throw thermal switches available to open and close on temperature rise. The phenolic base is made dust-proof by a metal closure which also provides thermal and electrical isolation for the silver contacts. The low silhouette design of the 3001 Series makes it an excellent choice where a non-hermetic precision unit is required for tight tolerances. The 3004 Series offers a metal sleeve insert-rivet construction and higher spacing to meet European approval agency requirements. It is also UL recognized and CSA certified.

Amperage: 1 A to 3 A (3001, 3001U Series)* 2 A to 4 A (3004 Series)*
Housing material: Phenolic base with metal closure
Operating temperature range: -18 °C to 168 °C [0 °F to 335 °F]
Environmental exposure range: -18 °C to 177 °C [0 °F to 350 °F]
Dielectric strength: MIL-STD-202, Method 301
1500 Vac 60 Hz terminal to case (2000 Vac 3004)
Insulation resistance: MIL-STD-202, Method 302, Cond. B
500 MOhm, 500 Vdc applied
Contact resistance: MIL-STD-202, Method 307, 50 mOhm
Hermetic seal: MIL-STD-202, Method 112, Cond. A, $1x10^{-5}$ atm cc/s
Moisture resistance: MIL-STD-202, Method 106
*Based on 240 Vac and life-cycle dependent. Call for further details.

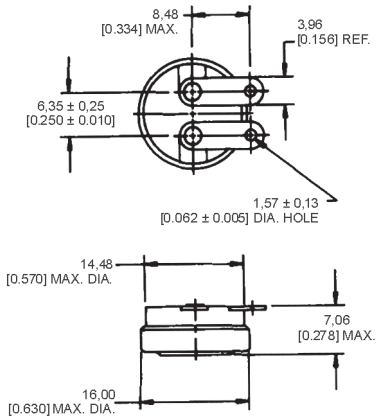

SERIES NAME
3001 Series Non-Hermetic Thermostat
3001U Series Non-Hermetic Thermostat
3004 Series Non-Hermetic Thermostat

3100/3106 Series Hermetic Thermostats

The 3100/3106 Series is a single pole, single throw switch activated by a snap-action bimetal disc. Temperature calibrations are pre-set at the factory and each unit is 100 % thermally and mechanically inspected. It is available to open or close on temperature rise. The case is laser welded to form a hermetically-sealed steel housing with a glass-to-metal seal at the terminal junction. It is manufactured and tested to meet or exceed critical commercial and industrial specifications. The 3106 Series has gold alloy contacts for low voltage applications.

Amperage: 0.5 A resistive (3106 Series)
7 A resistive (3100 Series)
Housing material: Steel housing with glass-to-metal seal at terminal junction
Operating temperature range: -29 °C to 260 °C [-20 °F to 500 °F] (3100 Series)
-29 °C to 204 °C [-20 °F to 400 °F] (3106 Series)
Environmental exposure range: -62 °C to 288 °C [-80 °F to 550 °F]
Dielectric strength: MIL-STD-202, Method 301
1250 Vac 60 Hz terminal to case (3100, 3100U, 3106 Series)
1500 Vac 60 Hz terminal to case (3100UX Series)
Insulation resistance: MIL-STD-202, Method 302, Cond. B
50 MOhm, 500 Vdc applied
Contact resistance: MIL-STD-202, Method 307
25 mOhm (3106 Series)
50 mOhm (3100 Series)
Hermetic seal: MIL-STD-202, Method 112, Cond. A
$1x10^{-5}$ atm cc/s
Moisture resistance: MIL-STD-202, Method 106

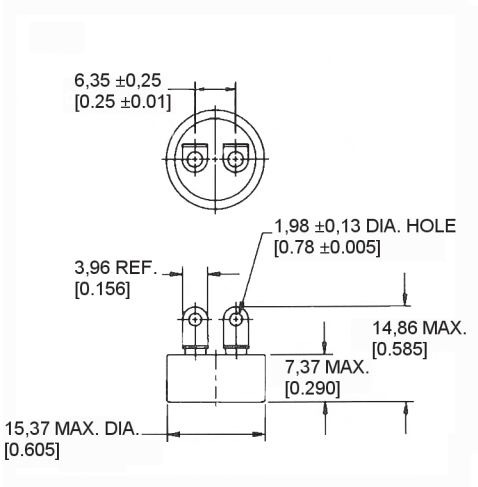

SERIES NAME
3100 Hermetic Thermostat
3100U Hermetic Thermostat
3100UX Hermetic Thermostat
3106 Hermetic Thermostat

3150/3156 Series Low Silhouette Hermetic Thermostats

The 3150/3156 Series is a single pole, single throw switch activated by a snap-action bimetal disc. Temperature calibrations are pre-set at the factory and each unit is 100 % thermally and mechanically inspected. It is available to open or close on temperature rise. The case is laser welded to form a hermetically-sealed steel housing with a glass-to-metal seal at the terminal junction. The low silhouette and compact design often make it especially well suited for applications that require miniaturization. The 3156 Series has gold alloy contacts for low voltage applications.

Amperage: 0.5 A resistive (3156 Series)
7 A resistive (3150 Series)
Housing material: Steel housing with glass-to-metal seal at terminal junction
Operating temperature range: -29 °C to 177 °C [-20 °F to 350 °F]
Environmental exposure range: -62 °C to 260 °C [-80 °F to 500 °F]
Dielectric strength: MIL-STD-202, Method 301
750 Vac 60 Hz terminal to case (3150, 3156 Series)
1250 Vac 60 Hz terminal to case (3150U, 3156U Series)
1500 Vac 60 Hz terminal to case (3150UX Series)
Insulation resistance: MIL-STD-202, Method 302, Cond. B
50 MOhm, 500 Vdc applied
Contact resistance: MIL-STD-202, Method 307
25 mOhm (3156 Series)
50 mOhm (3150 Series)
Hermetic seal: MIL-STD-202, Method 112, Cond. A
$1x10^{-5}$ atm cc/s
Moisture resistance: MIL-STD-202, Method 106

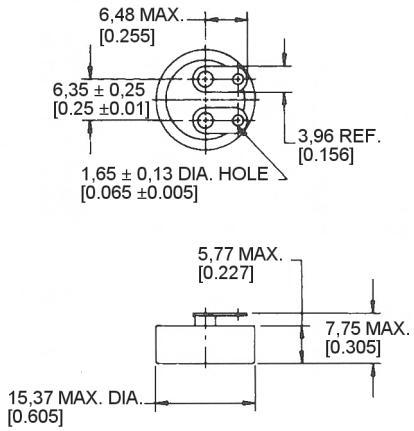

SERIES NAME
3150 Low Silhouette Hermetic Thermostat
3150U Low Silhouette Hermetic Thermostat
3150UX Low Silhouette Hermetic Thermostat
3156 Low Silhouette Hermetic Thermostat
3156U Low Silhouette Hermetic Thermostat

3600/3601 Series TO-5 Thermal Switches

The 3600/3601 Series is a single pole, single throw, bimetal snap-action switch available to open or close on temperature rise. These devices are specifically designed and often suited for mounting on products such as printed circuit boards to protect against hazardous temperatures associated with the thermal density of components on backplanes, flexible circuitry and sophisticated time-based circuits.

Amperage: 1 A resistive
Housing material: nickel
Operating temperature range: 40 °C to 120 °C [104 °F to 248 °F]
Environmental exposure range: -50 °C to 150 °C [-58 °F to 302 °F]
Dielectric strength: 500 Vac 60 Hz for one second, terminal to case
Insulation resistance: 20 MOhm at 500 Vdc
Contact resistance: 60 MOhm
Hermetic seal: $1x10^{-3}$ atm cc/s

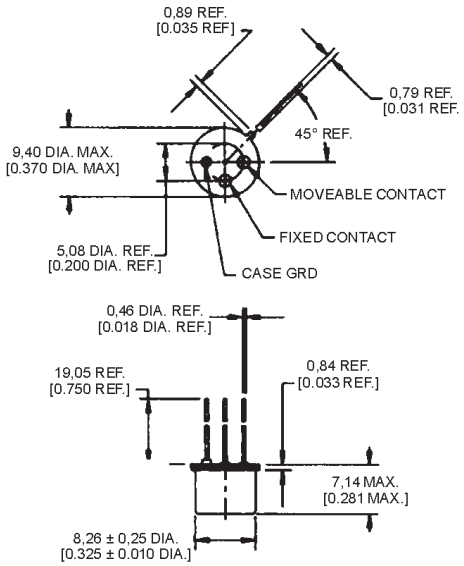

SERIES NAME
3600 Series TO-5 Thermal Switch
3601 Series TO-5 Thermal Switch

3000 Series Custom-packaged Thermostats

The 3000 Series incorporates a Honeywell thermostat assembled in a custom package for use in a variety of applications that require flexibility in mounting and terminal configurations. A typical product includes a 3100 hermetic internal thermostat with a terminal selection, housing selection and customized part number. These custom package devices operate in many extreme environmental conditions, such as exposure to hazardous substances, dust particles and liquid immersion.

Amperage:	7 A resistive
Housing material:	Stainless steel or brass
Operating temperature range:	-29 °C to 260 °C [-20 °F to 500 °F]
Environmental exposure range:	-62 °C to 288 °C [-80 °F to 550 °F]
Dielectric strength:	MIL-STD-202, Method 301 1250 Vac 60 Hz terminal to case
Insulation resistance:	MIL-STD-202, Method 302 50 MOhm to 500 MOhm
Contact resistance:	MIL-STD-202, Method 307 50 mOhm max.
Hermetic seal:	MIL-STD-202, Method 112, Condition A 1 x 10^{-5} atm cc/s
Moisture resistance:	MIL-STD-202 Method 106

Terminations for 3000-45X and 3000-55X* Housings*

0

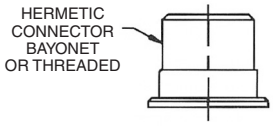

1

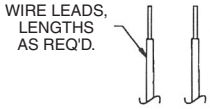

2a

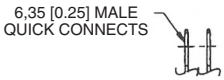

3

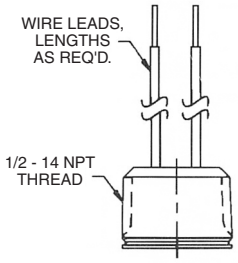

2b

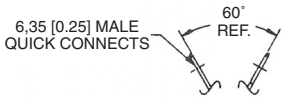

4a

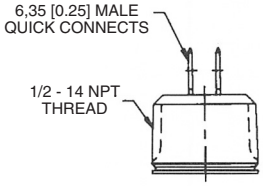

Housings

3000-45X*

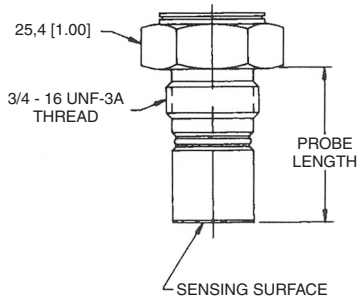

4b

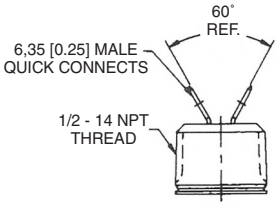

3000-55X*

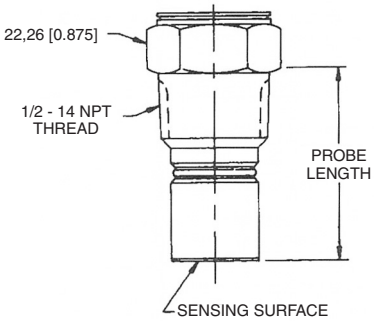

Terminations for 3000-53X and 3000-141 Housings*

1

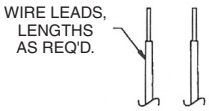

2a

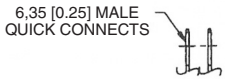

2b

Housings

3000-53X*

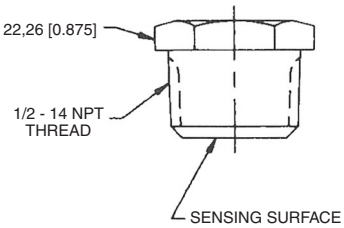

3000-141

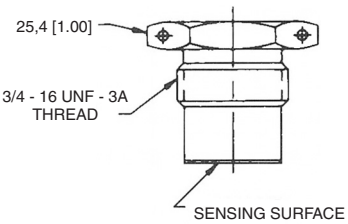

SERIES NAME
3000 Custom-packaged Thermostat

3800 Series Industrial-grade Thermostats for Severe Duty Applications

The 3800 Series is often used where high levels of vibration and mechanical shock are common but a military device is not required. It is easily customized for use in a variety of applications.

Amperage:	7 A resistive
Housing material:	Steel housing with glass-to-metal seal at terminal junction
Operating temperature range:	-29 °C to 260 °C [-20 °F to 500 °F]
Environmental exposure range:	-62 °C to 260 °C [-80 °F to 500 °F]
Dielectric strength:	MIL-STD-202, Method 301 1250 Vac terminal to case
Insulation resistance:	MIL-STD-202, Method 302, Cond. B 50 MOhm min. terminal to case
Contact resistance:	MIL-STD-202, Method 307 50 mOhm max.
Hermetic seal:	MIL-STD-202, Method 112, Cond. A 1 x 10^{-5} atm cc/s
Moisture resistance:	MIL-STD-202, Method 106
Vibration (random):	MIL-STD-202, Method 214 30 g, 20 Hz to 2,000 Hz
Vibration (sinusoidal):	MIL-STD-202, Method 204, Condition D 20 G, 20 Hz to 2,000 Hz
Mechanical shock:	MIL-STD-202, Method 213, 400 G
Thermal shock:	MIL-STD-202, Method 107, Cond. B
Acceleration:	MIL-STD-202, Method 212, 20 G

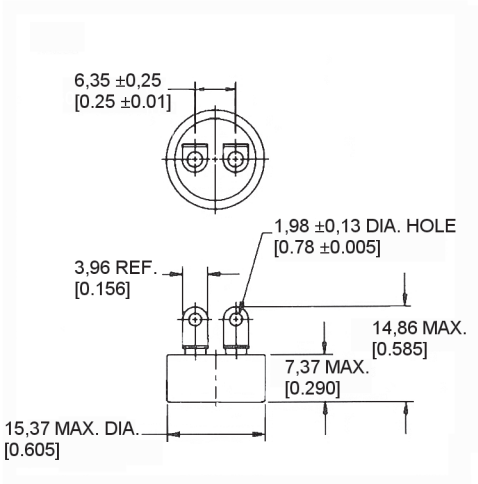

SERIES NAME
3800 Industrial Grade Thermostat

3450R/3450HR/3455R Series Phenolic Automatic Reset Thermostats

A temperature-sensitive bimetal disc, electrically isolated from the switch, actuates the normally closed contacts. The contacts open when the surface or ambient temperatures increase to the operating snap point of the calibrated disc. Response to temperature changes is extremely rapid due to the inherently low mass of the disc and the small size of the product. These products are factory calibrated to the customer's specification.

Reset type:	Automatic
Amperage capacity:	15 A resistive max.
Housing material:	Phenolic
Operating temperature range:	0 °C to 150 °C [32 °F to 302 °F]
Environmental exposure range:	0 °C to 150 °C [32 °F to 302 °F]

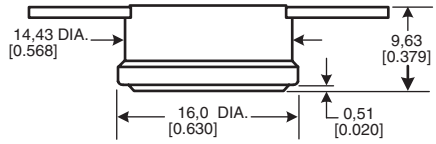

SERIES NAME
3450R Phenolic Automatic Reset Thermostat

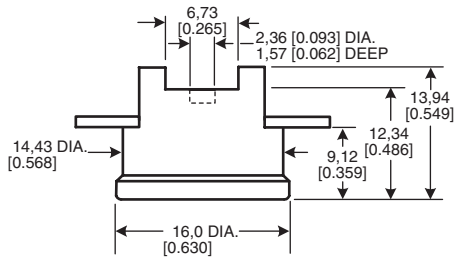

SERIES NAME
3450HR Phenolic Automatic Reset Thermostat

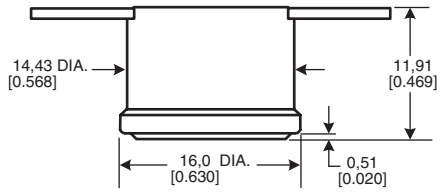

SERIES NAME
3455R Phenolic Automatic Reset Thermostat

3450RC/3450RCH/3455RC Series Ceramic Automatic Reset Thermostats

A temperature-sensitive bimetal disc, electrically isolated from the switch, actuates the normally closed contacts. The contacts open when the surface or ambient temperatures increase to the operating snap point of the calibrated disc. Response to temperature changes is extremely rapid due to the inherently low mass of the disc and the small size of the product.

Reset type:	Automatic
Amperage capacity:	15 A resistive max.
Housing material:	Ceramic
Operating temperature range:	0 °C to 260 °C [32 °F to 500 °F]
Environmental exposure range:	-20 °C to 287 °C [0 °F to 550 °F]

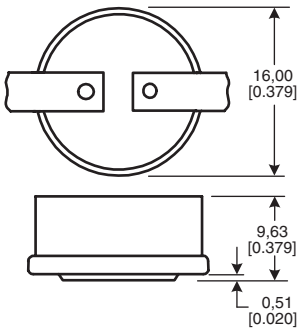

SERIES NAME
3450RC Ceramic Automatic Reset Thermostat

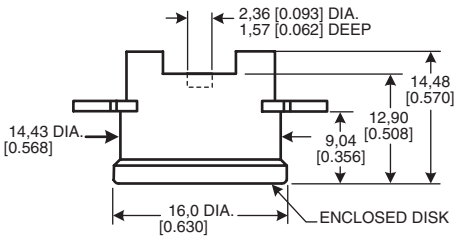

SERIES NAME
3450RCH Ceramic Automatic Reset Thermostat

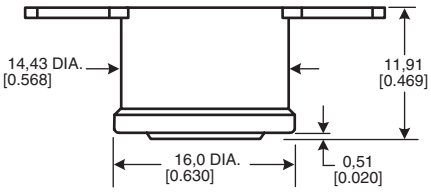

SERIES NAME
3455RC Ceramic Automatic Reset Thermostat

3450CM/3455RM Series Ceramic and Phenolic Manual Reset Thermostats

A temperature-sensitive bimetal disc, electrically isolated from the switch, actuates the normally closed contacts. The contacts open when the surface or ambient temperatures increase to the operating snap point of the calibrated disc. The circuit will stay open above room ambient temperature until the manual reset button is pressed. Response to temperature changes is extremely rapid due to the inherently low mass of the disc and the small size of the product.

Reset type:	Manual
Amperage capacity:	15 A resistive max.
Housing material:	Ceramic or phenolic
Operating temperature range:	52 °C to 232 °C [125 °F to 450 °F] (ceramic) 52 °C to 150 °C [125 °F to 302 °F] (phenolic)
Environmental exposure range:	10 °C to 260 °C [50 °F to 500 °F] (ceramic) 10 °C to 150 °C [50 °F to 302 °F] (phenolic)

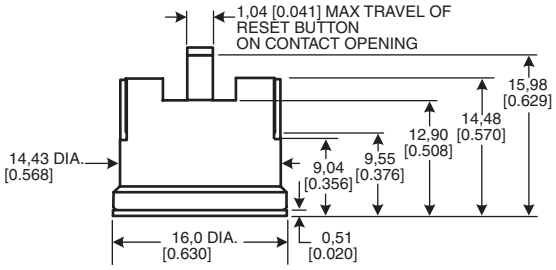

SERIES NAME
3450CM Ceramic Manual Reset Thermostat

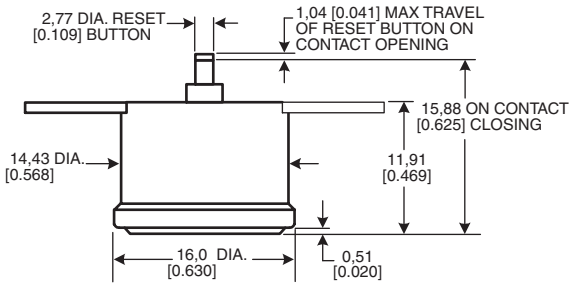

SERIES NAME
3455RM Phenolic Manual Reset Thermostat

3455RBV Series Overmolded Automatic Reset Thermostats

A temperature-sensitive bimetal disc, electrically isolated from the switch, actuates the normally closed contacts. The contacts open when the surface or ambient temperatures increase to the operating snap point of the calibrated disc. Response to temperature changes is extremely rapid due to the inherently low mass of the disc and the small size of the product.

Reset type: Automatic
Amperage capacity: 15 A resistive max.
Housing material: Ceramic or phenolic, epoxy overmold
Operating temperature range: -12 °C to 105 °C [10 °F to 221 °F]
Environmental exposure range: -18 °C to 121 °C [0 °F to 250 °F]

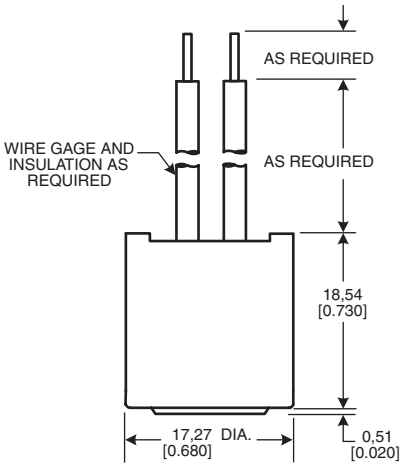

SERIES NAME
3455RBV Overmolded Automatic Reset Thermostat

3450R/3450RC/3450RCH/3455R/3455RC Series "One-shot" ½ in Thermostats

Products are designed for high limit applications where automatic reset is not desired.

Reset type: None
Amperage capacity: 15 A resistive max.
Housing material: Ceramic or phenolic, with or without epoxy-sealed cap and terminals
Operating temperature range: 52 °C to 260 °C [125 °F to 500 °F] (ceramic)
52 °C to 150 °C [125 °F to 302 °F] (phenolic)
Environmental exposure range: -18 °C to 287 °C [0 °F to 550 °F] (ceramic)
-18 °C to 150 °C [0 °F to 302 °F] (phenolic)

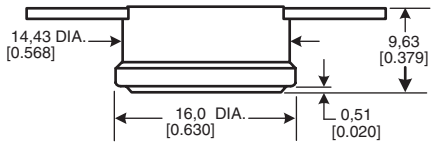

SERIES NAME
3450R Phenolic "One-shot" ½ in Thermostat

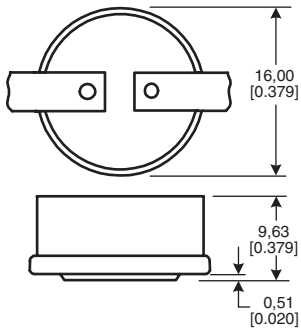

SERIES NAME
3450RC Ceramic "One-shot" ½ in Thermostat

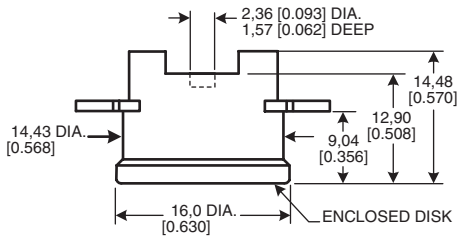

SERIES NAME
3450RCH Ceramic "One-shot" ½ in Thermostat

3450R/3450RC/3450RCH/3455R/3455RC Series "One-shot" ½ in Thermostats (continued)

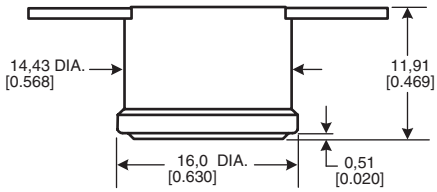

SERIES NAME
3455R Phenolic "One-shot" ½ in Thermostat

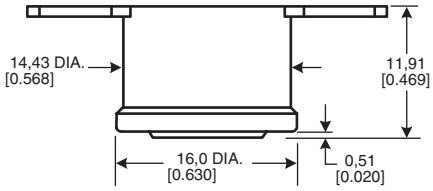

SERIES NAME
3455RC Ceramic "One-shot" ½ in Thermostat

Standard Terminal Guide: Hermetic Thermostats Only

3100/3106 Series

T-116

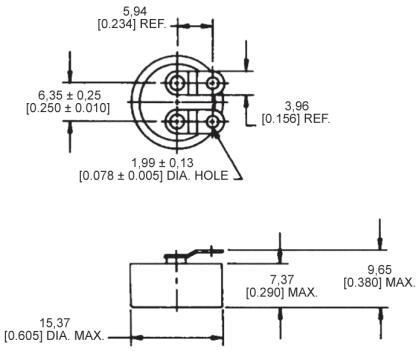

T-117

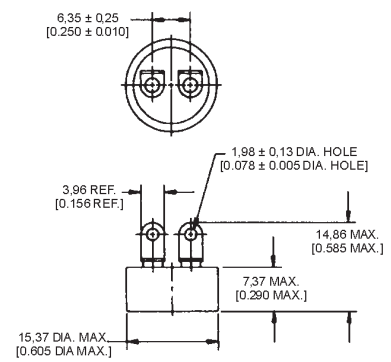

T-120

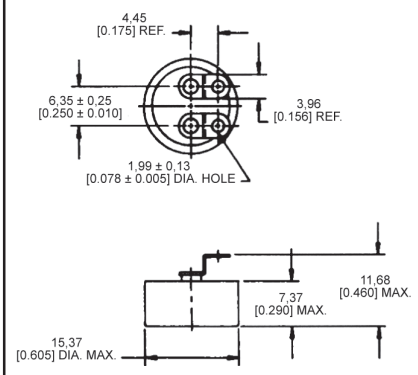

3150/3156 Series

T-109

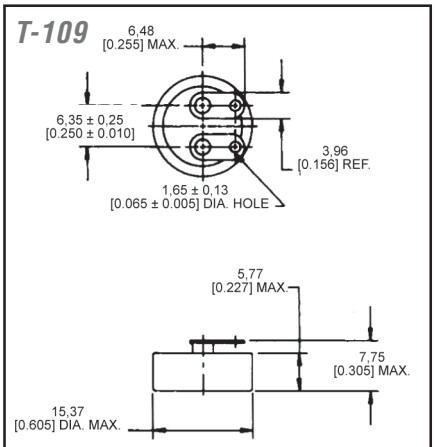

T-110

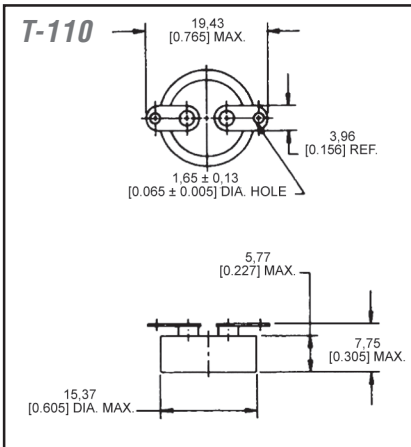

T-111

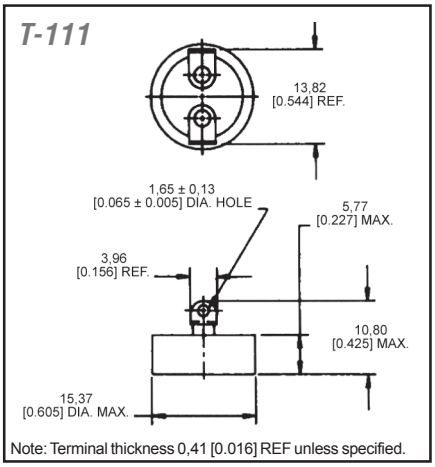

Note: Terminal thickness 0,41 [0.016] REF unless specified.

3305/3306 Series

T-133

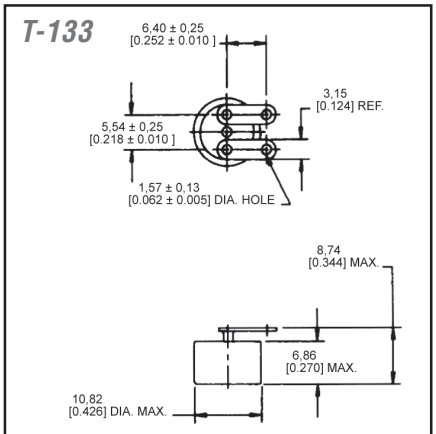

Note: Terminal thickness 0,25 [0.010] REF unless specified.

T-134

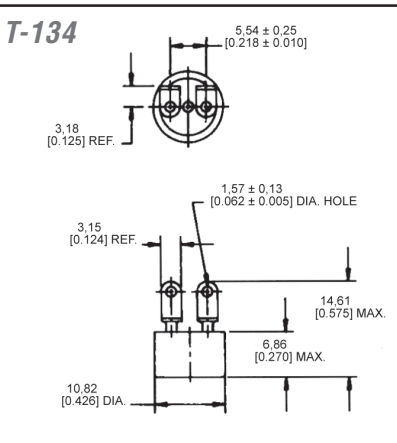

T-135

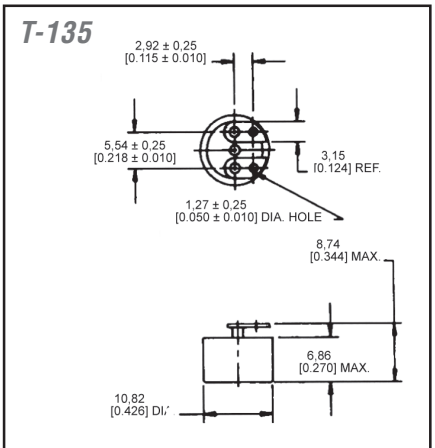

Standard Terminal Guide: Hermetic Thermostats Only (continued)

Hermetic Radius Cap (Except 3305/3306 Series)

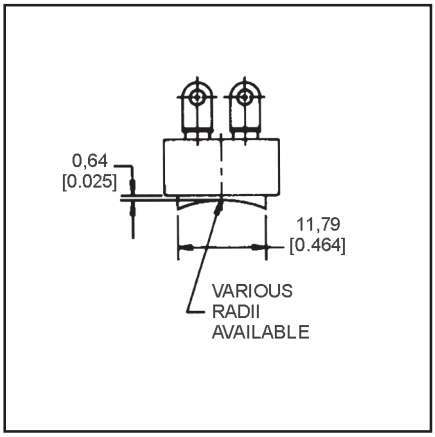

Terminal/Radius Cap Orientation Parallel Terminals

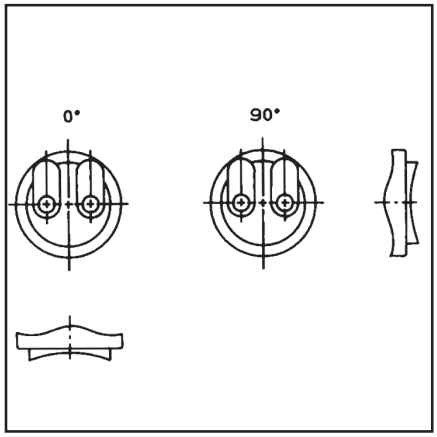

Terminal/Radius Cap Orientation Opposed Terminals

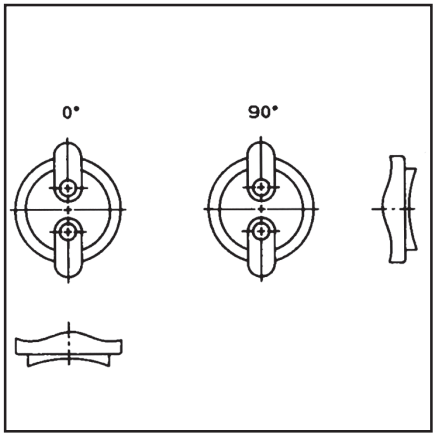

Standard Mounting Bracket Guide: Hermetic Thermostats Only

3100/3106/3150/3156/3305/3306 Series

B-208

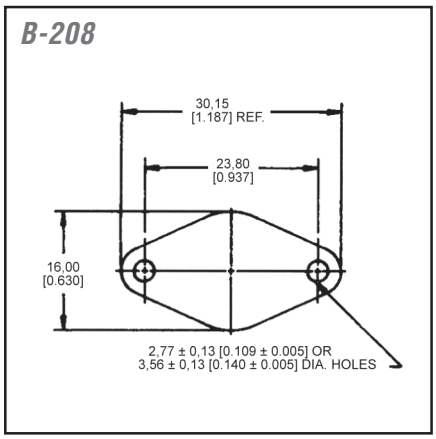

B-209

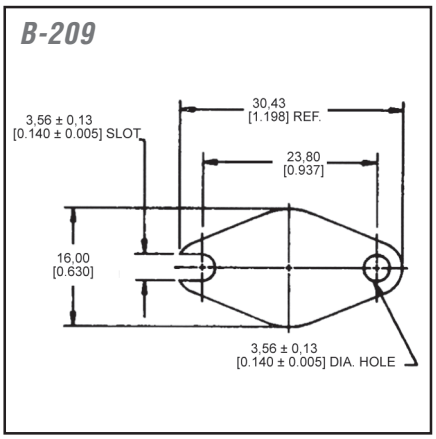

B-210

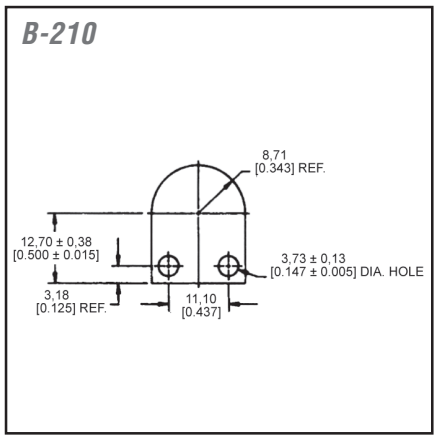

Top Mounted (Excluding 3150/ 3156/3305 Series)

B-212

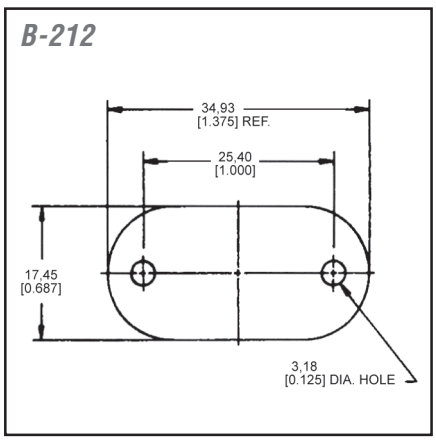

B-213

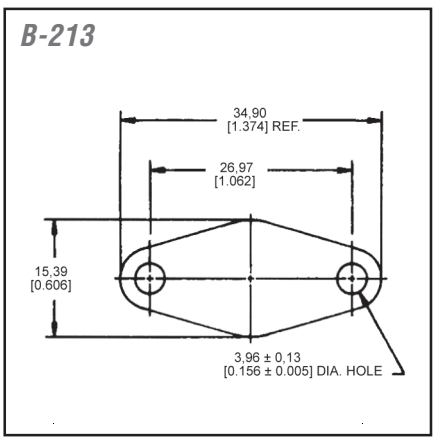

B-214

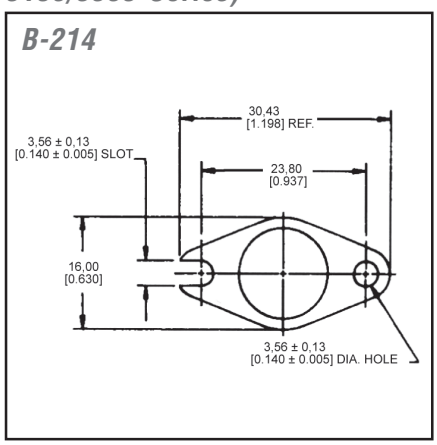

Standard Mounting Bracket Guide: Hermetic Thermostats Only (continued)

Top or Bottom Mounted

B-215

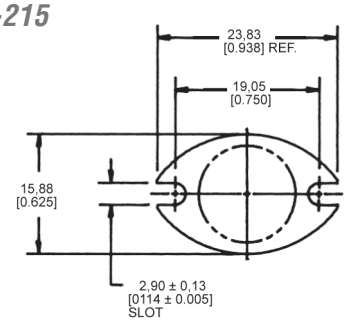

Notes: 1. Top mounted (excluding Series 3150/3156/3305).
2. Bracket thickness 0,51 ±0,10 [0.020 ±0.004] unless specified.
3. Decimal tolerance ±0,25 [±0.010] unless specified.

3305 Series Only

B-216

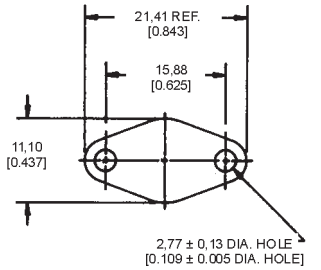

Note: Bracket thickness 0,51 ±0,10 [0.015 ±0.004] unless specified.

Top Mounted (Excluding 3150/ 3156/3305 Series)

B-245

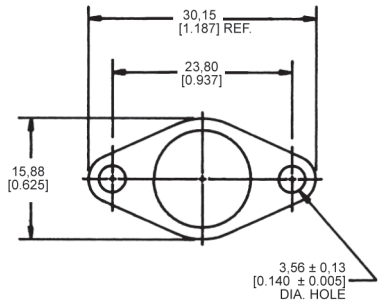

Hermetic Studs/Hex. Studs (Excluding Series 3305/3306) Studs

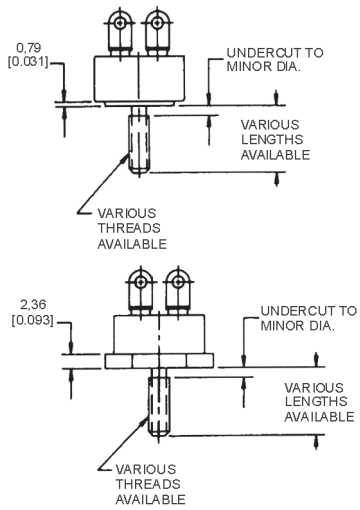

3305/3306 Studs

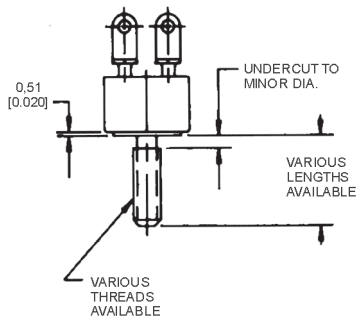

Note: Decimal tolerance ±0,25 [±0.010] unless specified.

Standard Mounting Bracket Guide: Hermetic Thermostats Only (continued)

Hermetic Overmolds (Silicone or Epoxy)

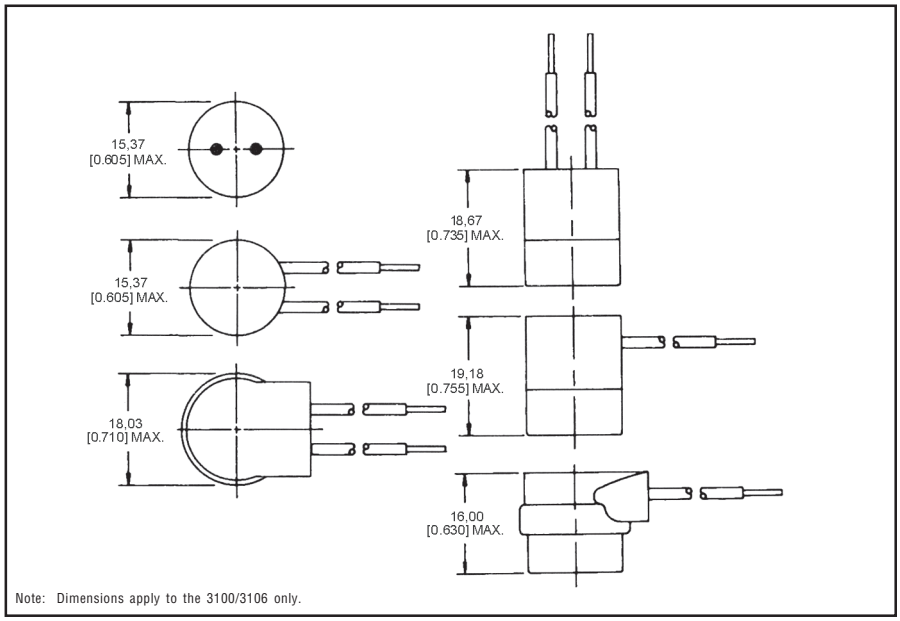

Terminal/Bracket Orientations

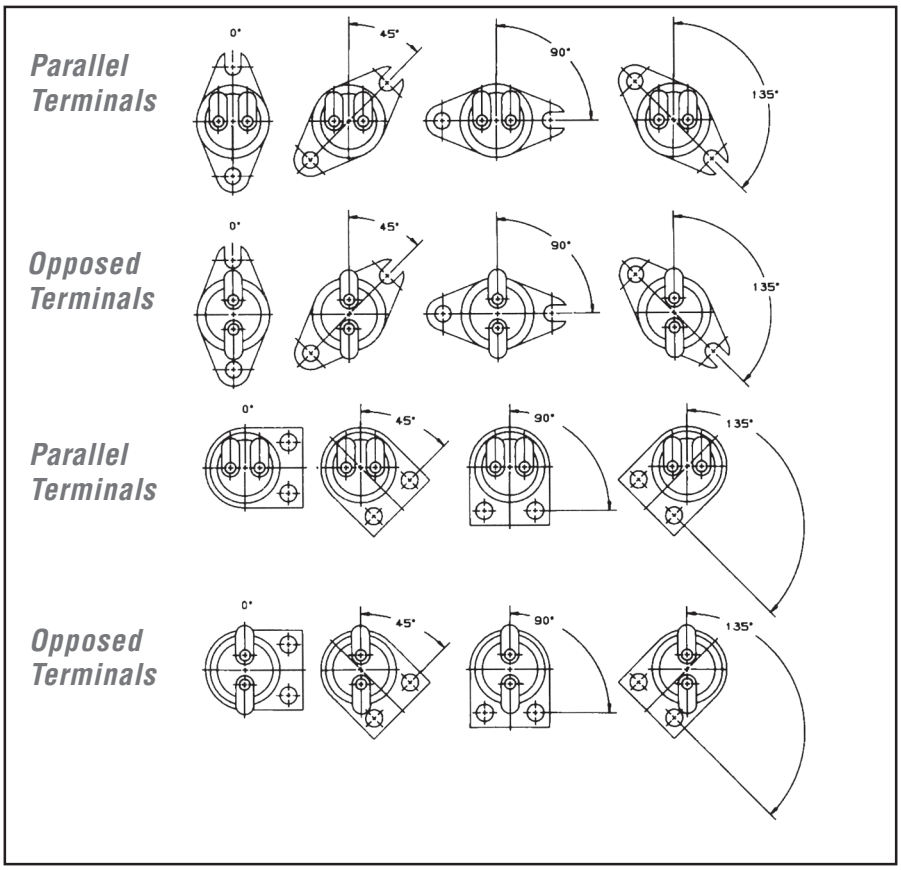

Standard Terminal Guide: Non-Hermetic Thermostats Only

3001 Series

T-123

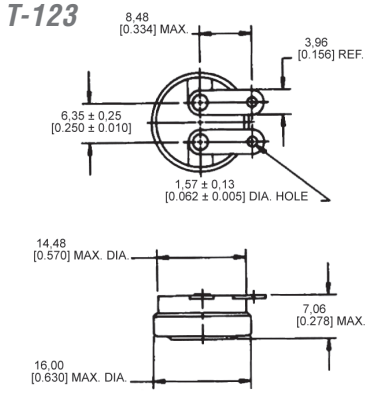

T-124

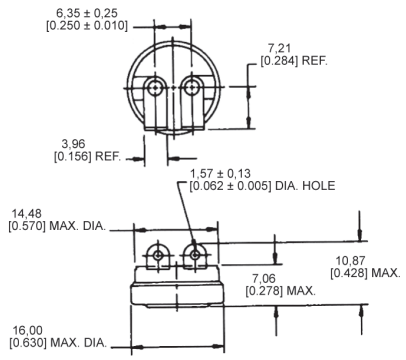

T-125

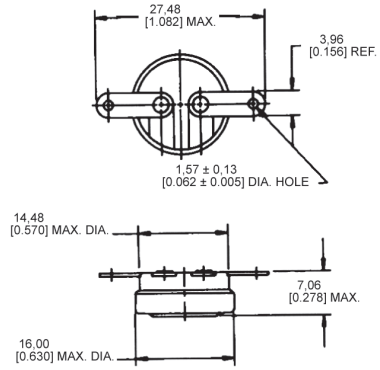

T-126

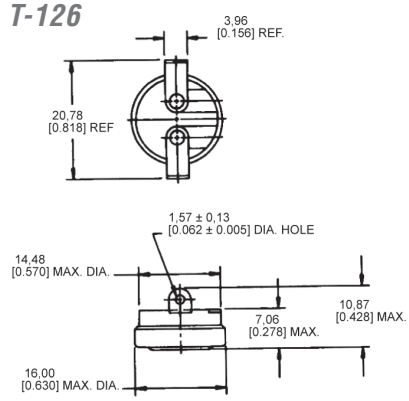

T-127

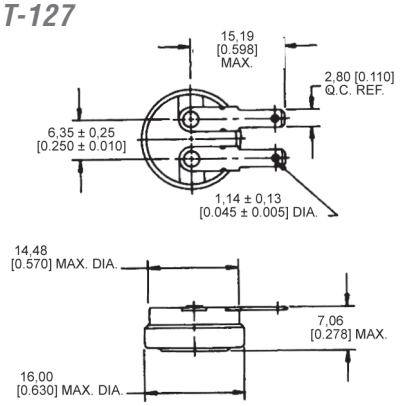

T-128

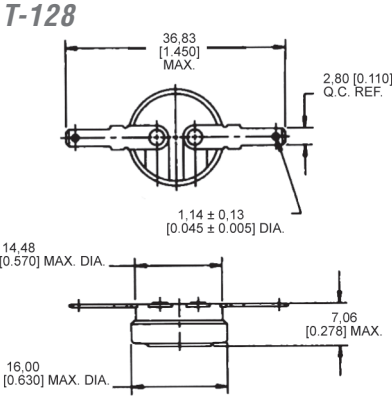

T-177

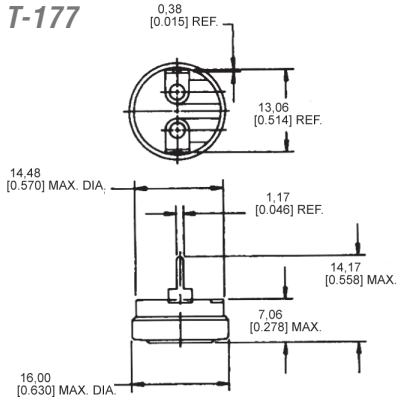

Note: Terminal thickness 0,51 [0.020] REF unless specified.

Standard Terminal Guide: Non-Hermetic Thermostats Only (continued)

3004 Series

T-123

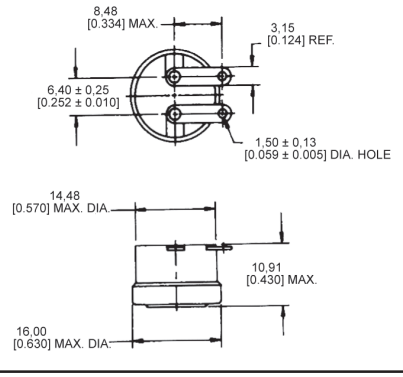

T-124

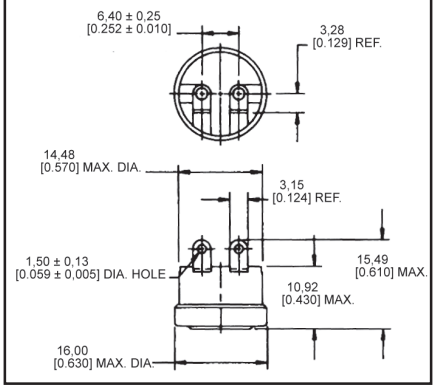

T-125

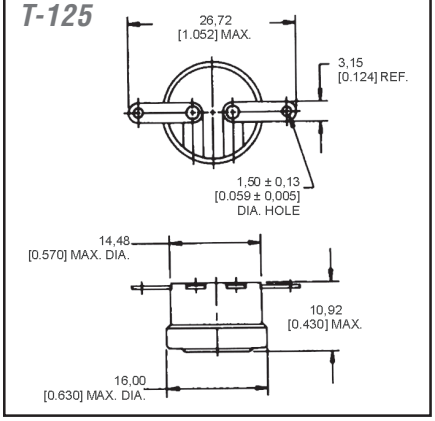

T-126

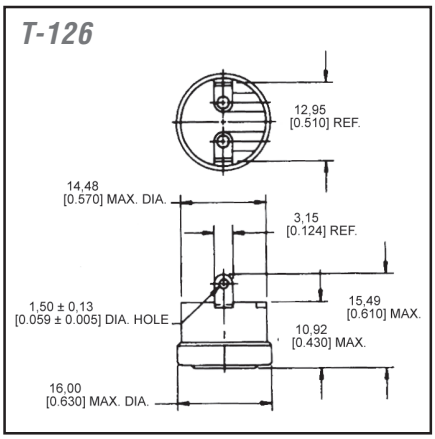

T-127

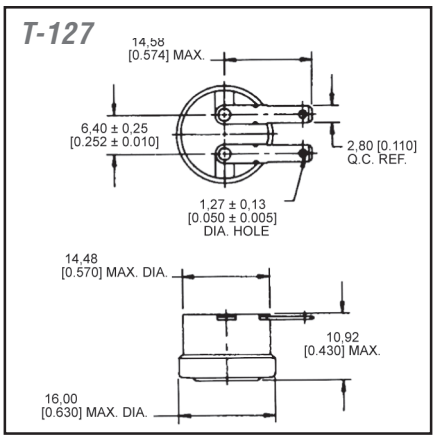

T-128

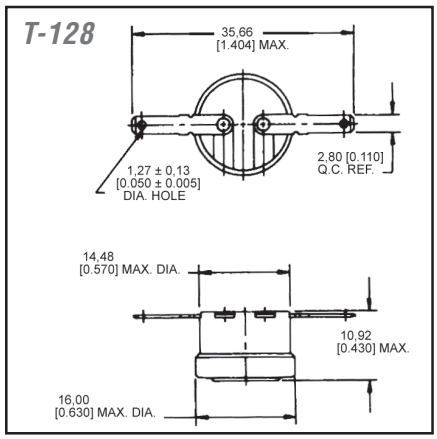

T-177

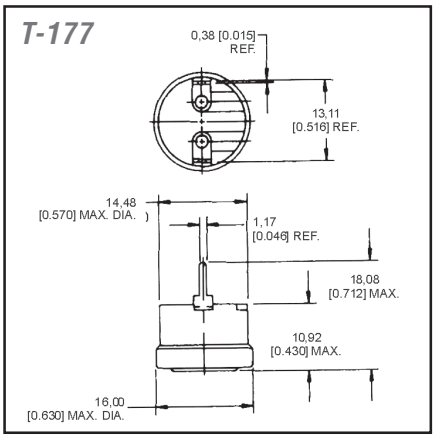

Note: Terminal thickness 0,51 [0.020] REF unless specified.

Standard Mounting Bracket Guide: Non-Hermetic Thermostats Only

Series 3450/3450CM/3450RC/3455R/3455RC/3455RM/3455RBV

3450, 3450RC

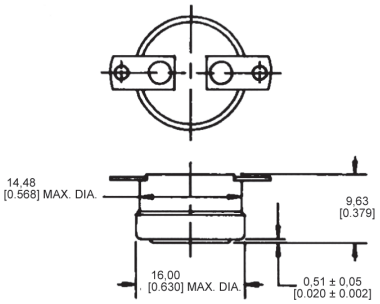

3450CM

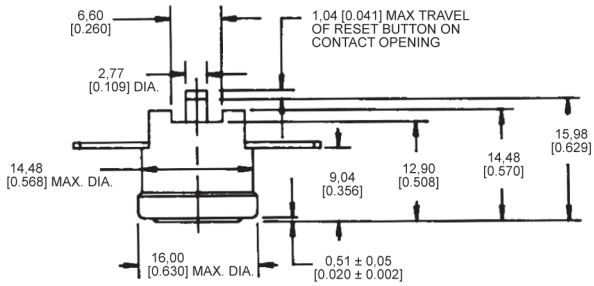

3455R, 3455RC

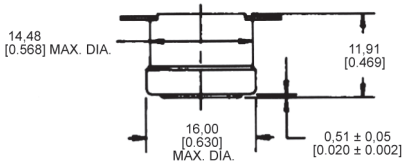

3455RM

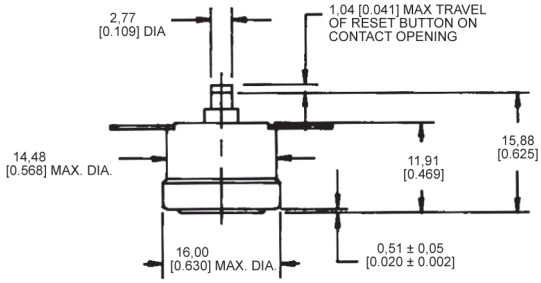

3455RBV

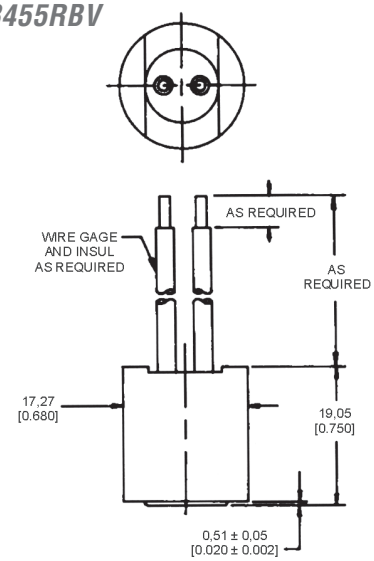

Standard Mounting Bracket Guide: Non-Hermetic Thermostats Only (continued)

Series 3450/3455R/3455RBV/3450C/3455RC/3455RM/3450CM

T-101

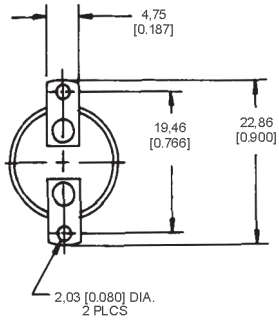

T-106

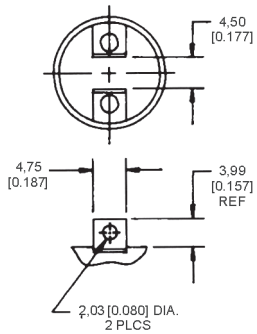

T-107

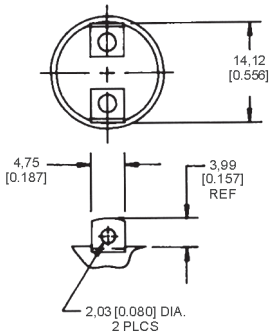

T-140

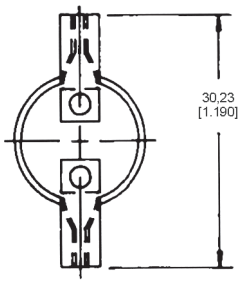

T-141

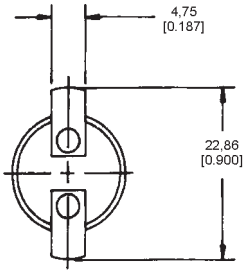

T-146

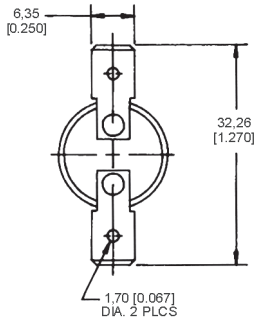

T-147

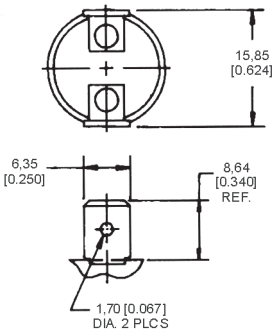

T-148

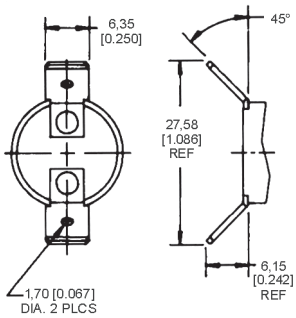

T-149

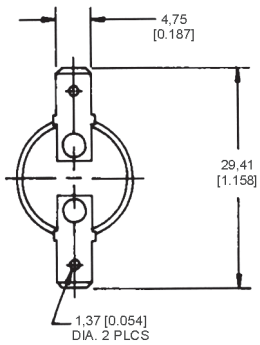

Standard Mounting Bracket Guide: Non-Hermetic Thermostats Only (continued)

Standard Terminals - Series 3450/3455R/3455RBV/3450C/3455RC/3455RM/3450CM

T-150

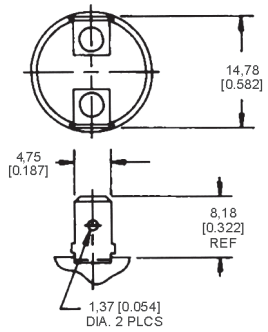

T-151

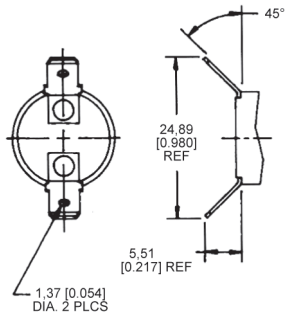

T-161

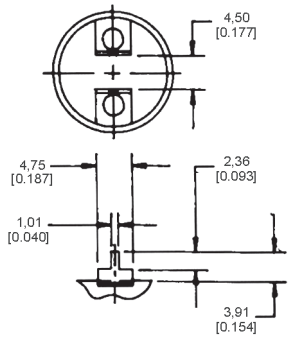

T-168

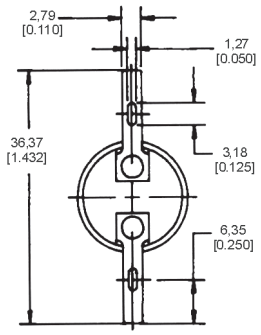

T-169

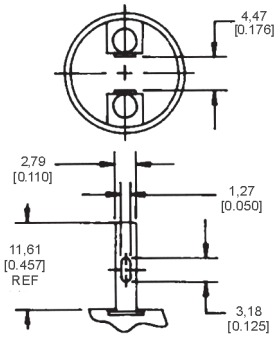

T-188

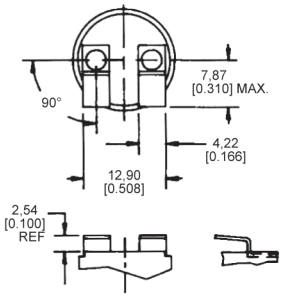

Standard Mounting Bracket Guide: Non-Hermetic Thermostats Only (continued)

Standard Mounting Brackets and Studs - Series 3001/3004 Only

B-201

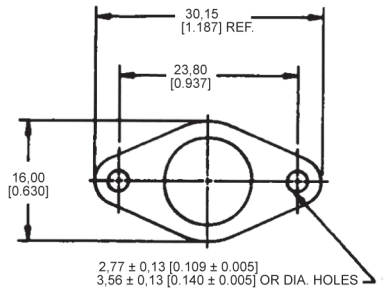

B-206

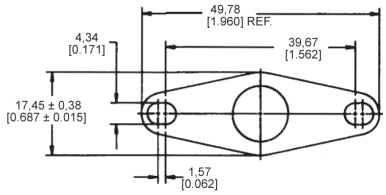

B-209

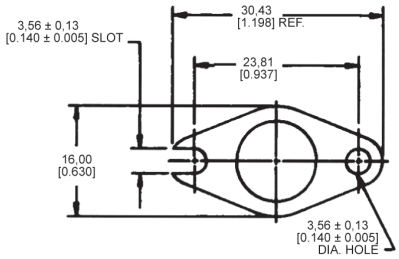

B-210

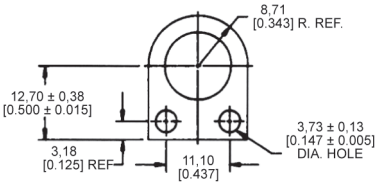

B-212*

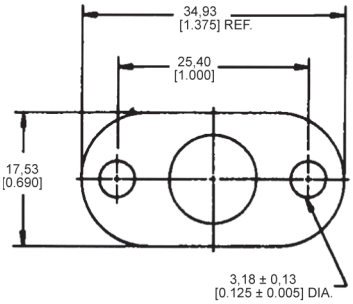

Note: Bracket thickness 0,38 ±0,10 [0.015 ±0.004] unless specified.

B-213

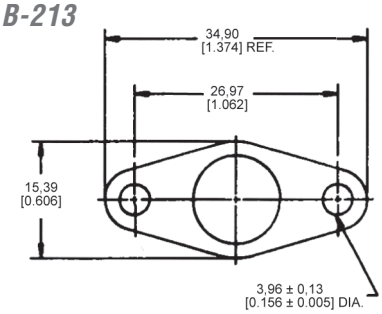

Notes: 1. Bracket thickness 0,51 ±0,10 [0.020 ±0.004] unless specified.
2. Decimal tolerance ±0,25 [0.010] unless specified.

Non-Hermetic Studs/Hex. Studs

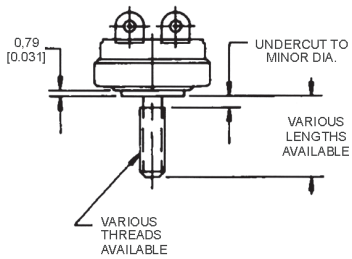

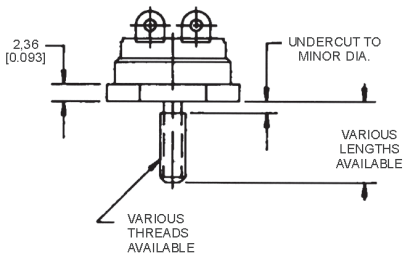

Note: Bracket thickness ±0,25 [0.010] unless specified.

Non-Hermetic Radius Caps

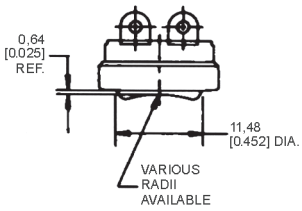

Note: Bracket thickness ±0,25 [0.010] unless specified.

Standard Mounting Bracket Guide: Non-Hermetic Thermostats Only (continued)

Series 3450/3455R/3455RBV/3450C/3455RC/3455RM/3450CM

B-201

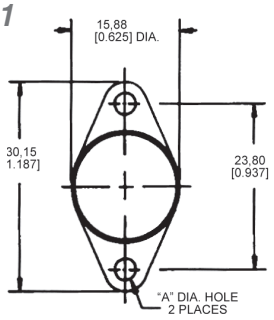

B-201 2,77 [0.109] DIA.
B-201A 3,68 [0.145] DIA.
B-201B 3,18 [0.125] DIA.

B-203

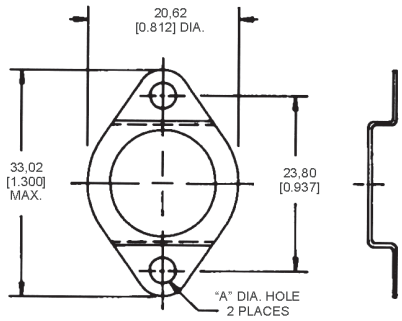

B-203 2,77 [0.109] DIA.
B-203A 3,68 [0.145] DIA.
B-203B 3,18 [0.125] DIA.

B-205

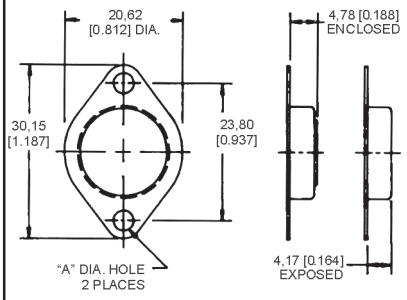

B-205 2,77 [0.109] DIA.
B-205 3,68 [0.145] DIA.

B-203S

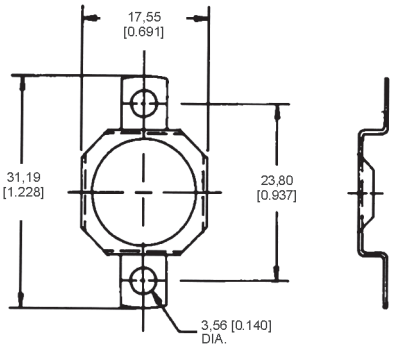

B-206

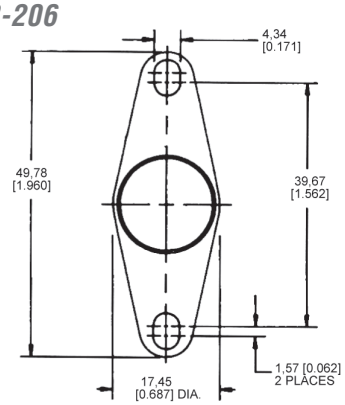

B-207

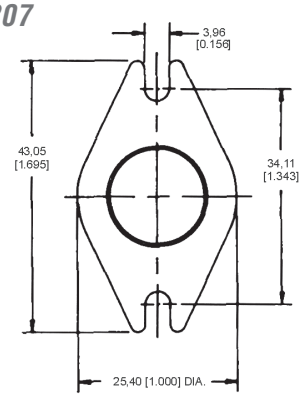

B-209

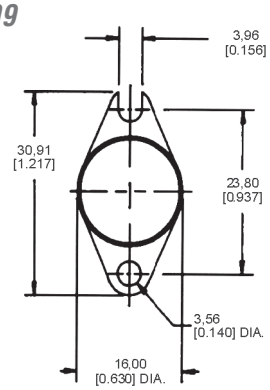

B-210

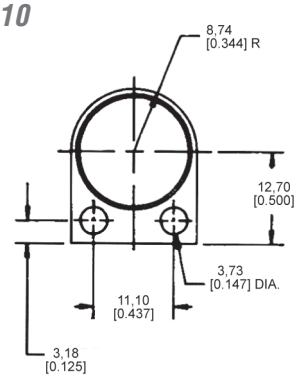

B-212

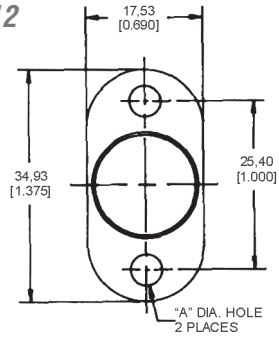

B-212 3,18 [0.125] DIA.
B-212A 4,75 [0.187] DIA.

B-213

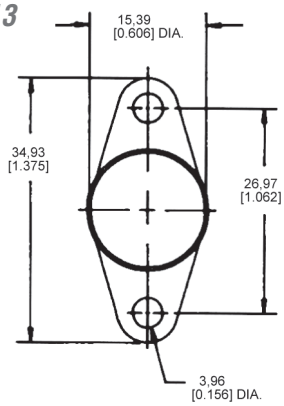

Standard Mounting Bracket Guide: Non-Hermetic Thermostats Only (continued)

B-230

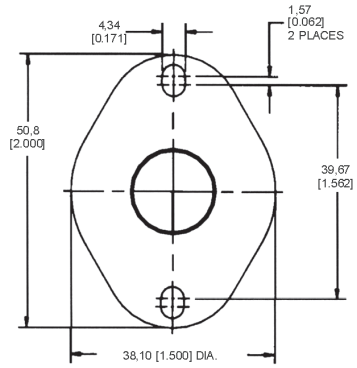

B-239

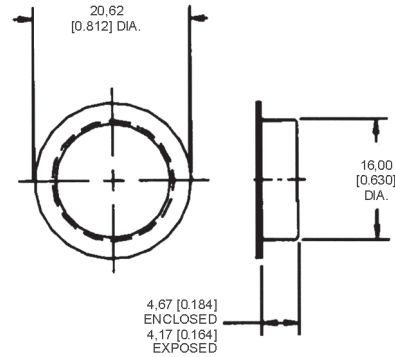

B-241

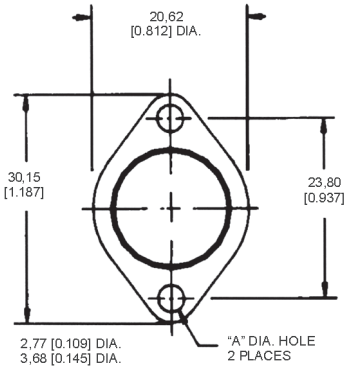

B-246

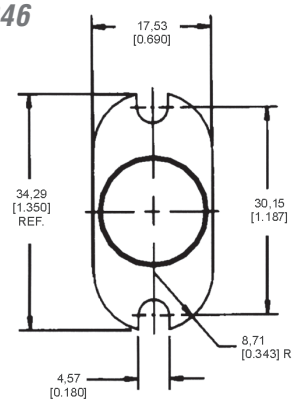

B-249

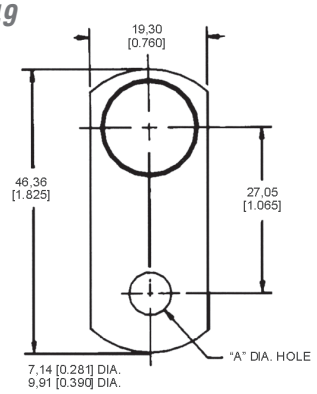

B-250

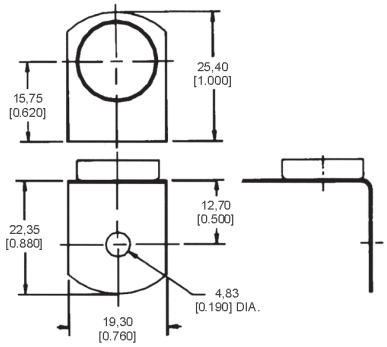

B-220/B227 Brass Hex Mounting Stud

B-220	#6-32
B-221	#8-32
B-222	#10-24
B-223	#10-32
B-224	M3 X 0.5
B-225	M4 X 0.7
B-226	M5 X 0.8
B-227	M6 X 1.0

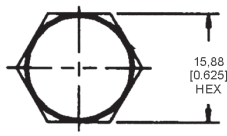

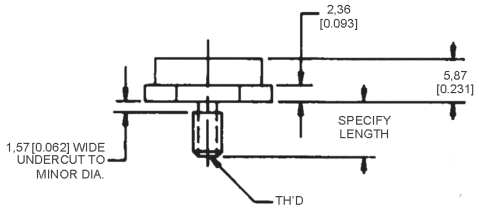

B-240 Brass Mounting Stud

#6-32
#8-32
#10-32
M3 X 0.5
M4 X 0.7
M5 X 0.8

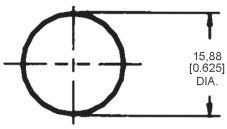

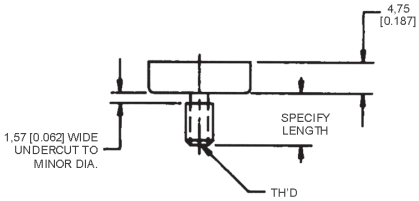

High Amperage Custom Package Thermostats: Non-Hermetic Internal Thermostats Only

3000-59

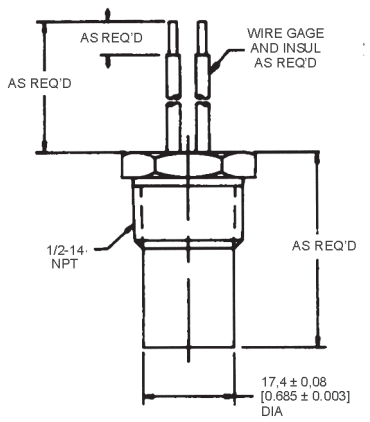

3000-105

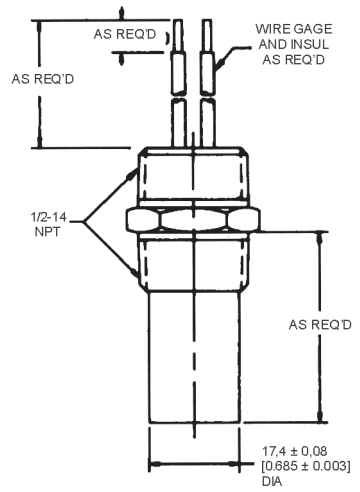

3000-53

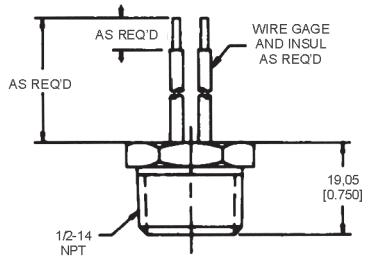

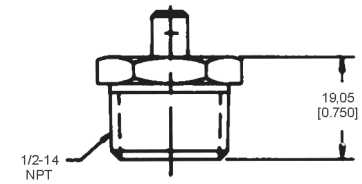

These custom designed Series 3000 packages include a non-hermetic non-adjustable, snap action 3450RC/3455RC thermostat. Performance characteristics are outlined elsewhere in this catalog. Housing material varies with customer requirements. Brass, stainless steel, and other materials are available. Customized wire, terminals and size may be designed to suit requirements.

Terminal/Bracket Orientations (Intermediate angles available on special request.)

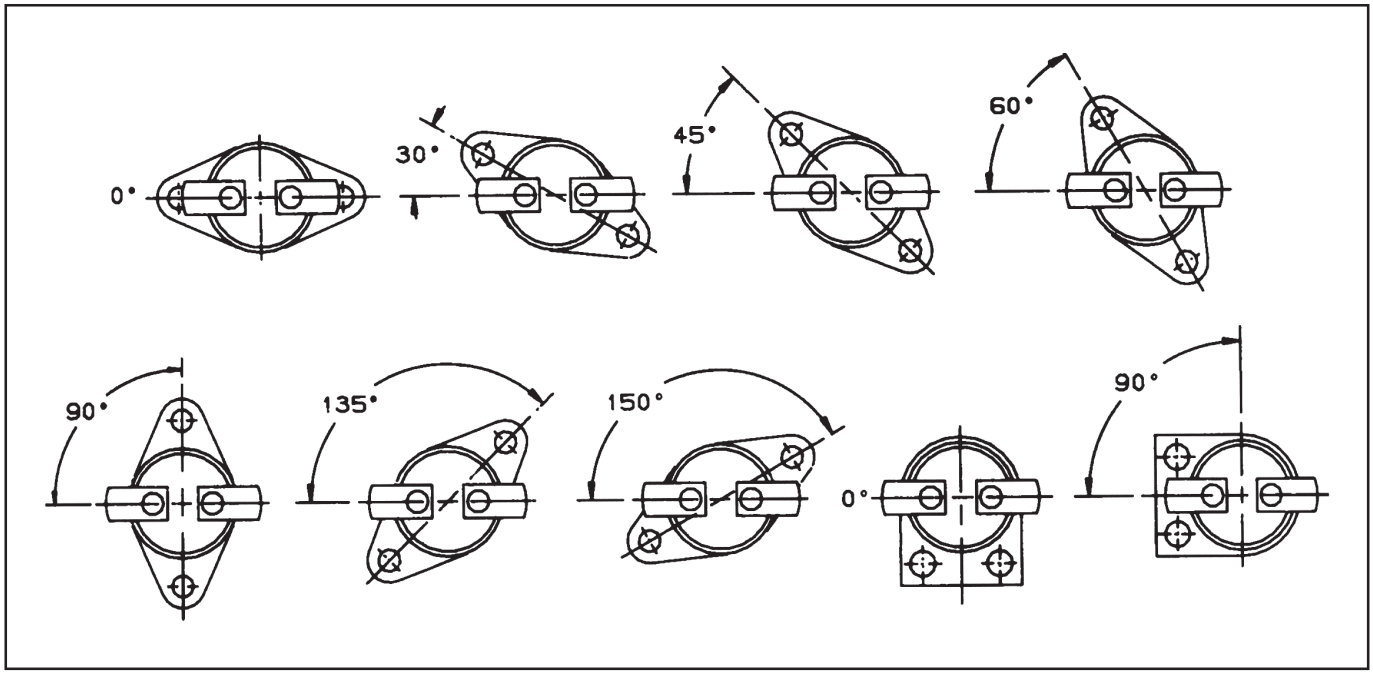

High Reliability thermostats are manufactured to meet the stringent requirements of the military and aerospace industries for dielectric strength, moisture resistance, vibration, shock and hermetic seal. They meet all domestic and international approvals, as well as appropriate military specifications (i.e., MIL-S-24236).

NOTE: The products in this section do not follow the "how to use this catalogue" instructions provided in the catalogue introduction. Specific reference numbers are not given due to their custom nature. Please contact your local Honeywell sales office for ordering information.

3200 Series Aerospace

The 3200 Series is a single pole, single throw switch activated by a snap-action bimetal disc. Temperature calibrations are pre-set at the factory and each unit is 100 % thermally and mechanically inspected. It is available to open or close on temperature rise. The case is laser welded to form a hermetically sealed steel housing, with a glass-to-metal seal at the terminal junction. It is manufactured and tested to meet or exceed critical military and aerospace specifications for spaceflight use, including temperature stability, shock, vibration and cleanliness.

Amperage:	5 A resistive
Housing material:	Steel housing with glass-to-metal seal at terminal junction
Operating temperature range:	-51 °C to 163 °C [-60 °F to 325 °F]
Environmental exposure range:	-65 °C to 177 °C [-85 °F to 350 °F]
Dielectric strength:	MIL-STD-202, Method 301, 1250 Vac
Insulation resistance:	MIL-STD-202, Method 302, 500 MOhm
Contact resistance:	MIL-STD-202, Method 307, 0.025 Ohm max.
Hermetic seal:	MIL-STD-202, Method 112, Cond. C
Moisture resistance:	MIL-STD-202, Method 106
Shock:	MIL-STD-202, Method 213, 750 G
Vibration:	MIL-STD-202, Method 204, 30 G MIL-STD-202, Method 214, 50 G
Acceleration:	MIL-STD-202, Method 212, 20 G
Thermal shock:	MIL-STD-202, Method 107, Cond. B
Salt (1) spray:	MIL-STD-202, Method 101, Cond. B

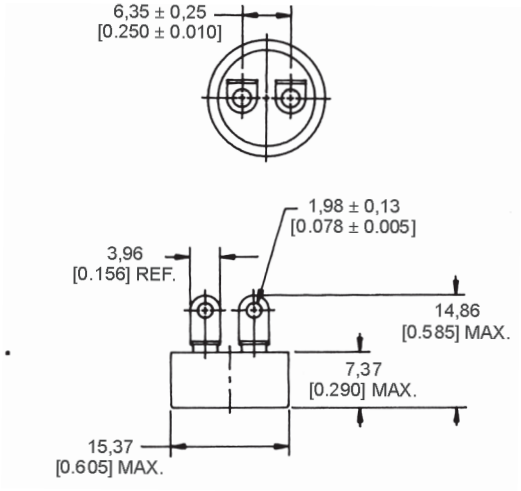

SERIES NAME
3200 Series Aerospace

3MS1 QPL Series Military

The 3MS1 Series is a single pole, single throw switch activated by a snap-action bimetal disc. Temperature calibrations are pre-set at the factory, and each unit is 100 % thermally and mechanically inspected. It is available to open or close on temperature rise. The case is laser welded to form a hermetically sealed steel housing with a glass-to-metal seal at the terminal junction. It is qualified to MIL-S-24236 and is QPL listed for military applications.

Amperage:	5 A resistive
Housing Material:	Steel housing with glass-to-metal seal at terminal junction
Operating temperature range:	-46 °C to 190 °C [-50 °F to 375 °F]
Environmental exposure range:	-65 °C to 260 °C [-85 °F to 500 °F]
Dielectric strength:	MIL-STD-202, Method 301, 1250 Vac
Insulation resistance:	MIL-STD-202, Method 302, 500 MOhm
Contact resistance:	MIL-STD-202, Method 307, 0.050 Ohm max.
Hermetic seal:	MIL-STD-202, Method 112 Cond. C
Moisture resistance:	MIL-STD-202, Method 106
Shock:	MIL-STD-202, Method 213, 100 G
Vibration:	MIL-STD-202, Method 204, 20 G
Acceleration:	MIL-STD-202, Method 212, 20 G
Thermal shock:	MIL-STD-202, Method 107, Cond. B
Salt (1) spray:	MIL-STD-202, Method 101, Cond. B

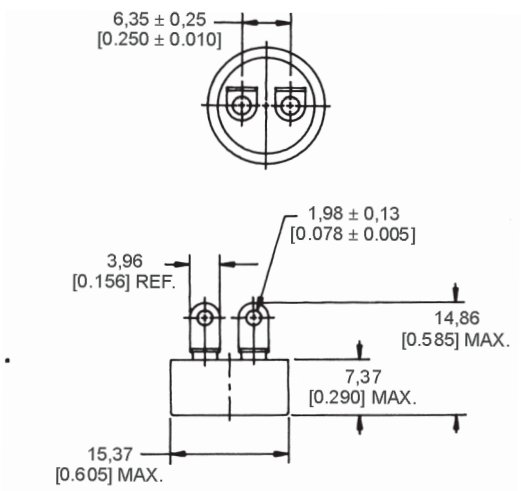

SERIES NAME
3MS1 QPL Series Military

3500 Series Military

The 3500 Series is a single pole, single throw switch activated by a snap-action bimetal disc. Temperature calibrations are pre-set at the factory, and each unit is 100 % thermally and mechanically inspected. It is available to open or close on temperature rise. The case is laser welded to form a hermetically sealed steel housing, with a glass-to-metal seal at the terminal junction. It meets or exceeds the requirements of MIL-S-24236 and is designed specifically for military and commercial aircraft applications. It is not QPL listed (see 3MS1).

Amperage:	5 A resistive
Housing material:	Steel housing with glass-to-metal seal at terminal junction
Operating temperature range:	-51 °C to 204 °C [-60 °F to 400 °F]
Environmental exposure range:	-65 °C to 260 °C [-85 °F to 500 °F]
Dielectric strength:	MIL-STD-202, Method 301, 1250 Vac
Insulation resistance:	MIL-STD-202, Method 302, 500 MOhm
Contact resistance:	MIL-STD-202, Method 307, 0.050 Ohm max.
Hermetic seal:	MIL-STD-202, Method 112, Cond. C
Moisture resistance:	MIL-STD-202, Method 106
Shock:	MIL-STD-202, Method 213, 400 G
Vibration:	MIL-STD-202, Method 204, 20 G
Acceleration:	MIL-STD-202, Method 212, 20 G
Thermal shock:	MIL-STD-202, Method 107, Cond. B
Salt (1) spray:	MIL-STD-202, Method 101, Cond. B

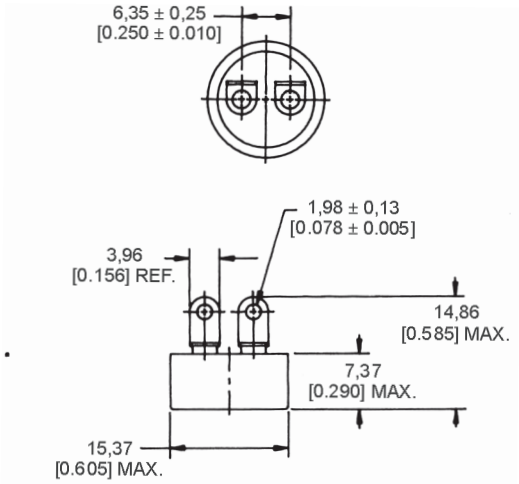

SERIES NAME
3500 Series Military

3153 Series Low Silhouette

The 3153 Series is a single pole, single throw switch activated by a snap-action bimetal disc. Temperature calibrations are pre-set at the factory, and each unit is 100 % thermally and mechanically inspected. It is available to open or close on temperature rise. The case is laser welded to form a hermetically sealed steel housing, with a glass-to-metal seal at the terminal junction. The low silhouette and compact design often make it especially well-suited for applications that require miniaturization. Acceptance testing is performed in accordance with MIL-S-24236, Table III.

Amperage:	6 A resistive
Housing Material:	Steel housing with glass-to-metal seal at terminal junction
Operating temperature range:	-29 °C to 177 °C [-20 °F to 350 °F]
Environmental exposure range:	-65 °C to 260 °C [-85 °F to 500 °F]
Dielectric strength:	MIL-STD-202, Method 301, 1250 Vac
Insulation resistance:	MIL-STD-202, Method 302, 500 MOhm
Contact resistance:	MIL-STD-202, Method 307, 0.050 Ohm max.
Hermetic seal:	MIL-STD-202, Method 112, Cond. C
Moisture resistance:	MIL-STD-202, Method 106
Shock:	MIL-STD-202, Method 213, 100 G
Vibration:	MIL-STD-202, Method 204, 20 G
Thermal shock:	MIL-STD-202, Method 107, Cond. B
Salt (1) spray:	MIL-STD-202, Method 101, Cond. B

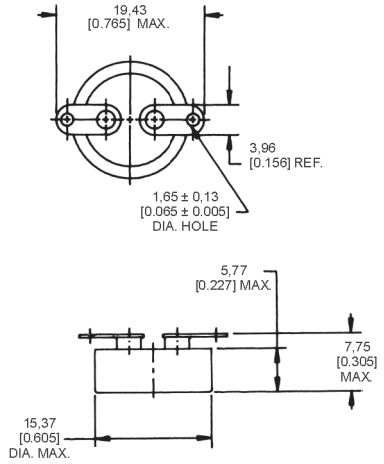

SERIES NAME
3153 Series Low Silhouette

Combi-sensor

The Combi-sensor is a liquid pressure/temperature sensor that uses piezoresistive and thermistor sensing technology to measure water pressure and temperature. It is designed for use in boiler system water pressure and inflow temperature measurement applications.

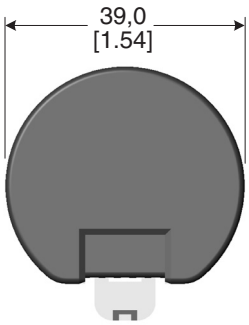

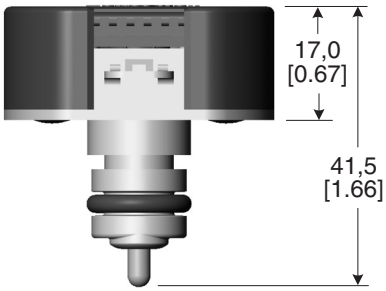

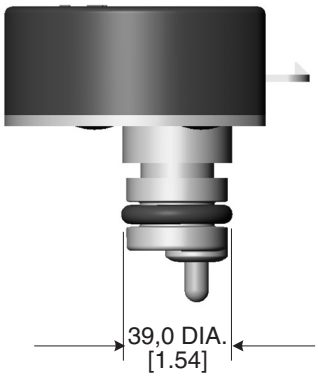

Pressure range: 0 bar to 3.0 bar relative
Accuracy: ±2 % over full range
Response time: <3 s
Operating temperature: 5 °C to 110 °C [41 °F to 203 °F]
Overpressure: 5 bar for 1 hour
Burst pressure: 9 bar for 1 min
Power supply: 5 Vdc ±10 %
Voltage output: 0.5 Vdc to 4.5 Vdc ratiometric to Vs
Maximum current limit: 250 mA (not self-limiting) (for reverse polarity)
NTC (Negative Temperature Coefficient) characteristics: 10 kOhm at 25 °C ±3 % beta(25/85) = 3998 K ±2 %
Connection: Lumberg rast 2.5 edge connector ESL code 312-600

DESCRIPTION	REFERENCE
Combi-sensor	FS300-100

Heaters

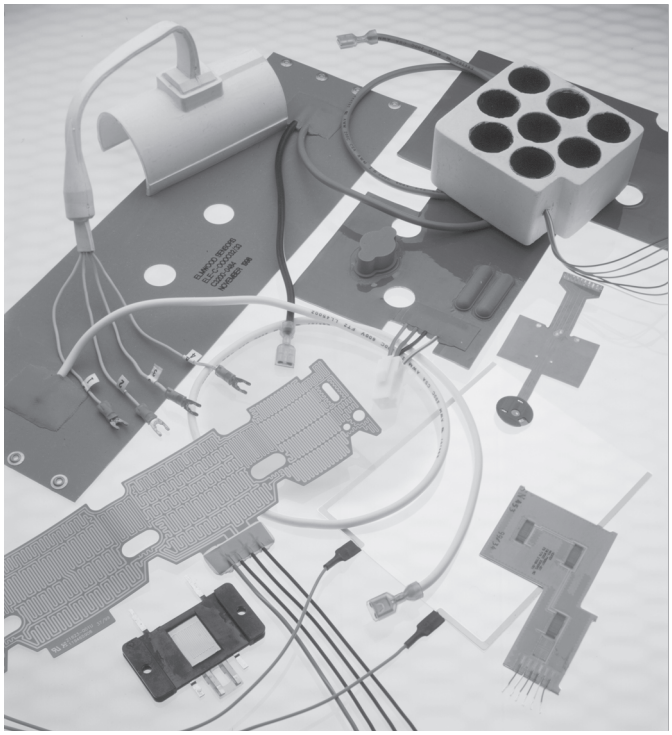

Heaters are resistive devices that are used in a variety of applications such as airborne valves, appliances, satellites and medical electronics. They are available in flat, molded-to-shape, spiral wrap, transparent, composite and high temperature configurations. Honeywell uses a variety of materials to manufacture its heaters. These include silicone, which can easily be vulcanized to metal parts; Kapton®, noted for its thermal stability over a wide temperature range; as well as other flexible dielectric materials. Heaters are available with single, multiple or variable watt densities to customize heat output to unique application needs. They may also be bonded to other system parts or combined with Honeywell thermostats, thermistors, thermocouples, temperature sensors and thermal fuses to form custom-engineered heating systems. Optional PSA (Pressure Sensitive Adhesive) is available with all series.

NOTE: The products in this section do not follow the "how to use this catalogue" instructions provided in the catalogue introduction. Specific reference numbers are not given due to their custom nature. Please contact your local Honeywell sales office for ordering information.

3100 Series Silicone Wire-wound Heaters

The 3100 Series contains resistive wire encased between two layers of fiberglass-supported silicone rubber. All bonding adhesives are uncured silicone rubber. These heaters are cured under pressure and temperature during manufacturing. The multi-stranded resistance wires allow wire-wound heaters to conform to three dimensional shapes. Optional PSA (Pressure Sensitive Adhesive) is available with all series.

Maximum power:	40 W/in²
Operating/storage temperature range:	250 °C [482 °F] max. 200 °C [392 °F] max. (UL)
Size constraints:	None, virtually any size and shape
Geometry:	Specific to customer requirements
Heater trace pattern:	Specific to customer requirements

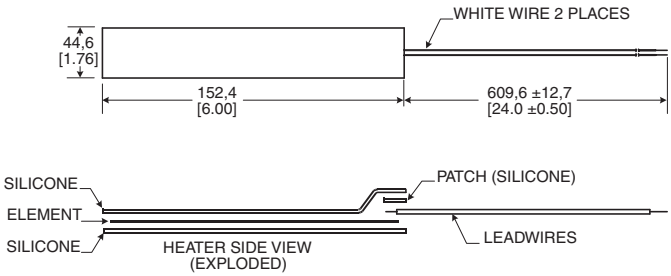

SERIES NAME
3100 Silicone Wire-wound Heater

3200 Series Silicone Chemically etched Heaters

The 3200 Series contains resistive foil traces encased between two layers of fiberglass-supported silicone rubber. All bonding adhesives are uncured silicone rubber. These heaters are cured under pressure and temperature during their manufacturing. They are often the optimal choice for multiple watt densities or varying trace geometry requirements.

Maximum power:	40 W/in²
Operating/storage temperature range:	250 °C [482°F] max. 200 °C [392 °F] max. (UL)
Size constraints:	0,61 m x 0,61 m [24 in x 24 in]
Geometry:	Specific to customer requirements
Heater trace pattern:	Specific to customer requirements

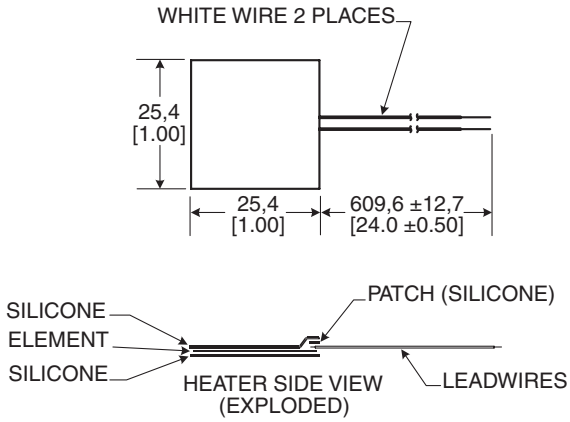

SERIES NAME
3200 Silicone Chemically etched Heater

3400 Series Kapton® or High Temperature Insulated Heaters

The 3400 Series contains etched, resistive foil encased between two layers of Kapton. The Kapton Insulated Heaters use an acrylic thermoset bonding adhesive, while the Kapton Insulated High Temperature Heaters use a Teflon™ bonding adhesive. Insulated heaters are often used in applications where thin profile and or low material outgassing are important considerations.

Maximum power: 40 W/in^2
Operating/storage temp. range:
- Kapton insulated: 177 °C [350 °F] max.
- Kapton high temperature insulated: 260 °C [500 °F] max.

Size constraints: 0,61 m x 0,61 m [24 in x 24 in]
Geometry: Specific to customer requirements within size constraints
Heater trace pattern: Specific to customer requirements

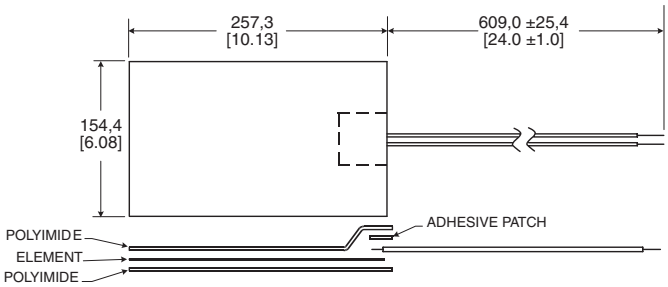

SERIES NAME
3400 Kapton or High Temperature Insulated Heater

78000 Series Transparent Heaters

The 78000 Series heater resistive element consists of a very thin layer of ITO (Indium Tin Oxide) electrically sputtered on PET polyester film. The electrical connection is made via silver ink or carbon bus bars laid on top of the ITO. Wire connections are made via ring terminals eyeleted to the silver or carbon bus bars or flexible tail/connector. Transparent heaters are often used to warm liquid crystal displays (LCDs) in cold, moist environments.

Maximum power: 5 W/in^2
Operating/storage temp. range: -40 °C to 85 °C [-40 °F to 185 °F]
Size constraints: 0,60 m x 0,43 m [22 in x 17 in]
Geometry: Specific to customer requirements within size constraints
Heater trace pattern: Continuous layer of ITO (Indium Tin Oxide) evenly sputtered across entire surface

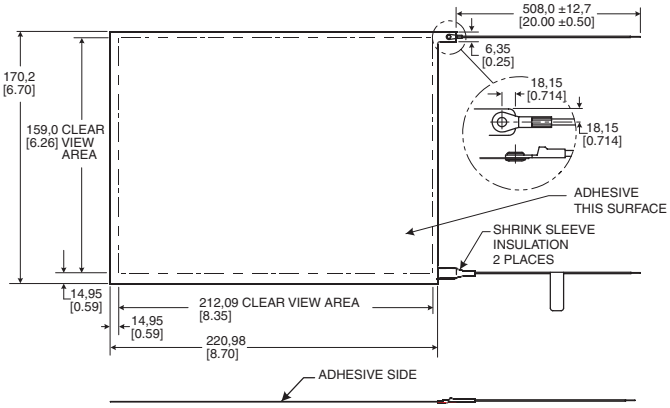

SERIES NAME
78000 Transparent Heater

Magnetic Position Sensors

Honeywell's Solid State Position Sensor family includes digital and analog Hall-effect position sensors, magnetoresistive digital sensors, Hall-effect vane sensors, gear tooth sensors, Hall-effect basic switches, and magnets. Solid State Position Sensors promote reliability, high speed and long life and are directly compatible with other electronic circuits.

Position sensors are often used in applications which require accurate, reliable outputs. They are found in brushless dc motors, utility meters, welding equipment, vending machines, home appliances and computers.

SS41/SS400 Series and SS51/SS500 Series Hall-effect Digital Position Sensors

The SS41/SS51 Series Bipolar Hall-effect Sensors offer reverse polarity protection, as well as a wide operating voltage and temperature range. The SS400/SS500 Series position sensors have a thermally balanced circuit over the full operating temperature range. The negative compensation slope is optimized to match the negative temperature coefficient of lower-cost magnets. Bipolar, latching, and unipolar magnetic types are available.

Supply voltage: 4.5 Vdc to 24 Vdc (SS41/SS51)
3.8 Vdc to 30 Vdc (SS400/SS500)

Operating temperature: -40 °C to 150 °C [-40 °F to 302 °F]

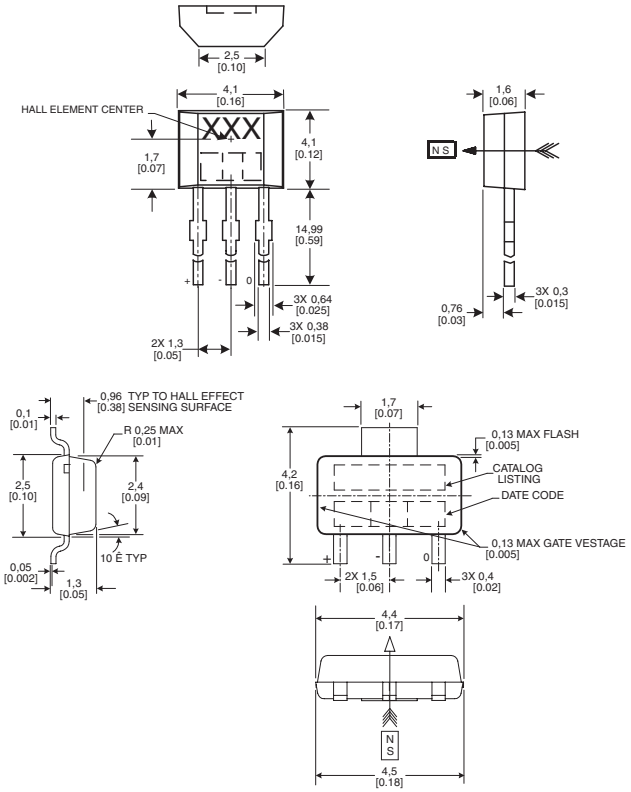

OPTIONS

Maximum Operating Point and Minimum Release Point are specified @ 25 °C

Bipolar - non-temperature compensated

OPERATING POINT (MAX.)	RELEASE POINT (MIN.)	PACKAGE STYLE	REFERENCE
150 Gauss	-140 Gauss	Radial lead IC (SIP)	SS41
150 Gauss	-140 Gauss	Surface mount (SOT-89)	SS51T

Bipolar - temperature compensated

OPERATING POINT (MAX.)	RELEASE POINT (MIN.)	PACKAGE STYLE	REFERENCE
60 Gauss	-60 Gauss	Radial lead IC (SIP)	SS411A
140 Gauss	-140 Gauss	Radial lead IC (SIP)	SS413A
60 Gauss	-60 Gauss	Surface mount (SOT-89)	SS511AT
140 Gauss	-140 Gauss	Surface mount (SOT-89)	SS513AT

Unipolar - temperature compensated

OPERATING POINT (MAX.)	RELEASE POINT (MIN.)	PACKAGE STYLE	REFERENCE
115 Gauss	20 Gauss	Radial lead IC (SIP)	SS441A
180 Gauss	75 Gauss	Radial lead IC (SIP)	SS443A
390 Gauss	235 Gauss	Radial lead IC (SIP)	SS449A
115 Gauss	20 Gauss	Surface mount (SOT-89)	SS541AT
180 Gauss	75 Gauss	Surface mount (SOT-89)	SS543AT
390 Gauss	235 Gauss	Surface mount (SOT-89)	SS549AT

Bipolar latching - temperature compensated

OPERATING POINT (MAX.)	RELEASE POINT (MIN.)	PACKAGE STYLE	REFERENCE
85 Gauss	-85 Gauss	Radial lead IC (SIP)	SS461A
180 Gauss	-180 Gauss	Radial lead IC (SIP)	SS466A
85 Gauss	-85 Gauss	Surface mount (SOT-89)	SS561AT
180 Gauss	-180 Gauss	Surface mount (SOT-89)	SS566AT

SS40A/SS50AT Series

The SS40A/SS50AT Series sensors are low-cost, bipolar, Hall-effect sensors. These sensitive magnetic sensors offer reverse polarity protection and deliver stable output over a -40 °C to 125 °C [-40 °F to 257 °F] temperature range.

Supply voltage: 4.5 Vdc to 24 Vdc
Operating temperature: -40 °C to 125 °C [-40 °F to 257 °F]
Magnetic range (25°C): 110 Gauss (operate point max.)
-110 Gauss (release point min.)

OPTIONS

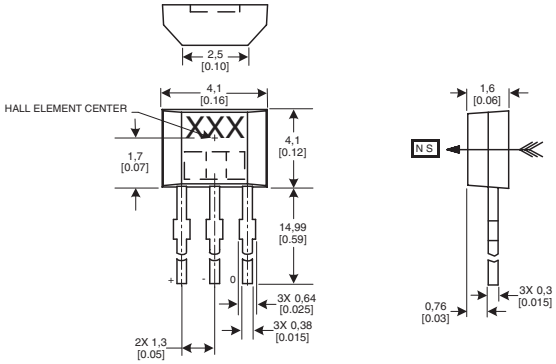

Radial IC package

LEADS	REFERENCE
Standard	SS40A
Formed leads on 2,54 mm [0.1 in] centers	SS40A-F
Tape-in-box (ammopack) with formed leads	SS40A-T2
Tape-in-box (ammopack) with straight leads	SS40A-T3

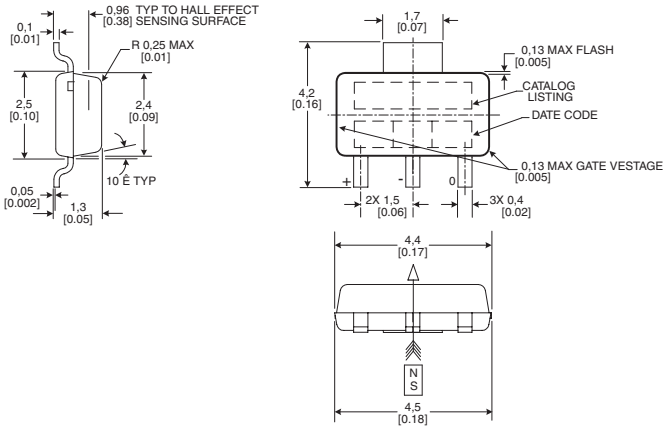

Surface-mount package

LEADS	REFERENCE
Tape and reel	SS50AT

SS49E/SS59ET Series

The SS49E/SS59ET Series economical linear Hall-effect sensors are small, versatile devices that are operated by the magnetic field from a permanent magnet or an electromagnet. The linear sourcing output volume is set by the supply voltage and varies in proportion to the strength of the magnetic field

Supply voltage: 3.0 Vdc to 6.5 Vdc
Operating temperature: -40 °C to 100 °C [-40 °F to 212 °F]
Magnetic range: ±1000 Gauss typ.

OPTIONS

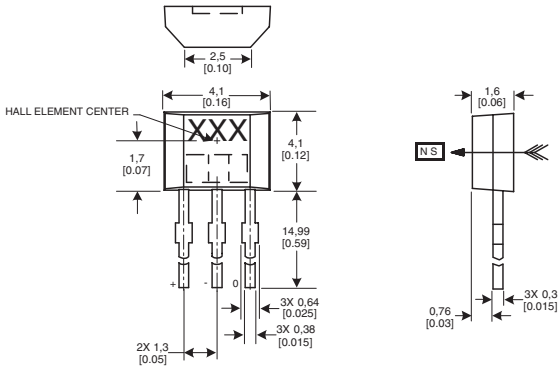

Radial IC package

LEADS	REFERENCE
Standard leads	SS49E
Long-leaded version	SS49E-L
Tape-and-reel version with formed leads	SS49E-T2
Tape-and-reel version with straight leads	SS49E-T3

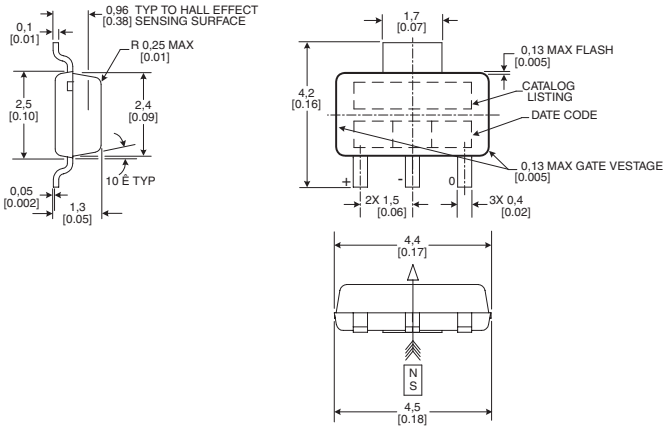

Surface-mount package

LEADS	REFERENCE
Standard surface mount	SS59ET

SS490 Series Ratiometric Hall-effect Linear Position Sensors

Package style: Plastic radial lead IC
Supply voltage: 4.5 Vdc to 10.5 Vdc
Operating temperature: -40 °C to 150 °C [-40 °F to 302 °F]

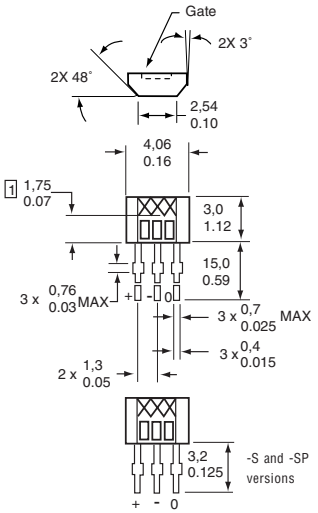

OPTIONS

Magnetic range: -420 Gauss to 420 Gauss

	PACKAGE STYLE	REFERENCE
	Radial lead IC	SS494B
	Surface mount	SS494B-S
	Surface mount reel	SS494B-SP

Magnetic range: -670 Gauss to 670 Gauss

	PACKAGE STYLE	REFERENCE
	Radial lead IC	SS495A
High accuracy	Radial lead IC	SS495A1
High accuracy	Surface mount	SS495A1-S
	Surface mount reel	SS495A-SP

Magnetic range: -840 Gauss to 840 Gauss

	PACKAGE STYLE	REFERENCE
	Radial lead IC	SS496A
High accuracy	Radial lead IC	SS496A1
High accuracy	Surface mount	SS496A1-S
	Surface mount reel	SS4946A-SP

SS94 Series Ratiometric Hall-effect Linear Position Sensors

The SS94 utilizes a Hall-effect integrated circuit chip which promotes increased temperature stability and performance. Laser-trimmed thick film resistors on the ceramic substrate and thin film resistors on the integrated circuit reduce null and gain shifts over temperature which results in consistent sensitivity from one device to the next

Package style: Ceramic
Operating temperature: -40 °C to 125 °C [-40 °F to 257 °F]
-55 °C to 150 °C [-67 °F to 302 °F](SS94B1A only)

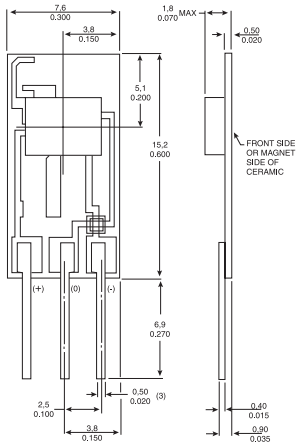

OPTIONS

General purpose

MAGNETIC RANGE	SUPPLY VOLTAGE	SENSITIVITY @ 25 °C	REFERENCE
-500 Gauss to 500 Gauss	6.6 Vdc to 12.6 Vdc	5.0 mV ±0.1 mV/G	SS94A1
-500 Gauss to 500 Gauss	4.5 Vdc to 8.0 Vdc	1.875 mV ±0.1 mV/G	SS94A1B
-670 Gauss to 670 Gauss	4.5 Vdc to 12.0 Vdc	3.125 mV ±0.069 mV/G	SS94B1
275 Gauss to 1030 Gauss	4.5 Vdc to 10.5 Vdc	5.62 mV ±0.112 mV/G	SS94B1A

Low drift

MAGNETIC RANGE	SUPPLY VOLTAGE	SENSITIVITY @ 25 °C	REFERENCE
-500 Gauss to 500 Gauss	6.6 Vdc to 12.6 Vdc	5.0 mV ±0.1 mV/G	SS94A1E

High sensitivity

MAGNETIC RANGE	SUPPLY VOLTAGE	SENSITIVITY @ 25 °C	REFERENCE
-100 Gauss to 100 Gauss	6.6 Vdc to 12.6 Vdc	25.0 mV ±0.5 mV/G	SS94A1F

Noise shielded

MAGNETIC RANGE	SUPPLY VOLTAGE	SENSITIVITY @ 25 °C	REFERENCE
-500 Gauss to 500 Gauss	6.6 Vdc to 12.6 Vdc	5.0 mV ±0.1 mV/G	SS94A2
-1000 Gauss to 1000 Gauss	6.6 Vdc to 12.6 Vdc	2.5 mV ±0.05 mV/G	SS94A2C
-2500 Gauss to 2500 Gauss	6.6 Vdc to 12.6 Vdc	1.0 mV ±0.02 mV/G	SS94A2D

2SS Series Magnetoresistive Digital Position Sensors

2SS Series position sensors have magnetoresistive material integrated on silicon and encapsulated in a plastic package. The integrated circuit provides a digital output in response to very low magnetic fields.

Supply voltage: 3.8 Vdc to 30 Vdc
Operating temperature: -40 °C to 150 °C [-40 °F to 302 °F]
Maximum operating point: 25 Gauss
Minimum release point: 5 Gauss

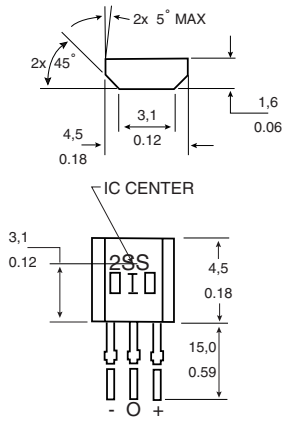

Omnipolar

PACKAGE STYLE	REFERENCE
Radial lead IC	2SS52M
Surface Mount	2SS52M-S

SS552MT Series Surface-Mount Sensors

Package style: Surface mount
Supply voltage: 3.8 Vdc to 30 Vdc
Operating temperature: -40 °C to 150 °C [-40 °F to 302 °F]

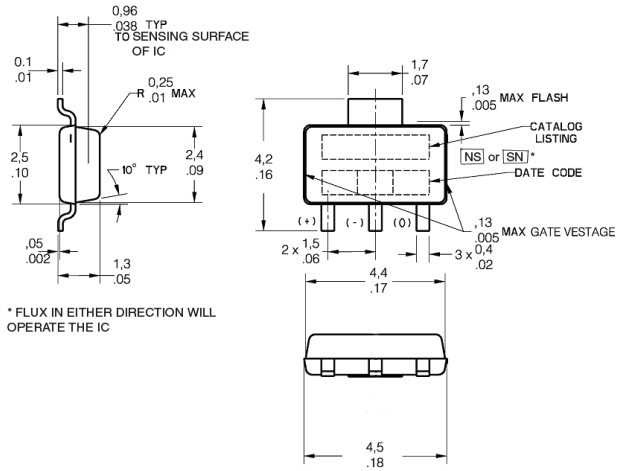

PACKAGE STYLE	REFERENCE
Surface Mount	SS552MT

5SS Series Hall-effect Digital Position Sensors

5SS Series Hall-effect digital sensors detect a unipolar target and function as a magnetically operated solid state switch.

Package style: Threaded boss, quick-connect terminals
Operating temperature: -40 °C to 150 °C [-40 °F to 302 °F]
-40 °C to 100 °C [-40 °F to 212 °F]
Output type: Sink

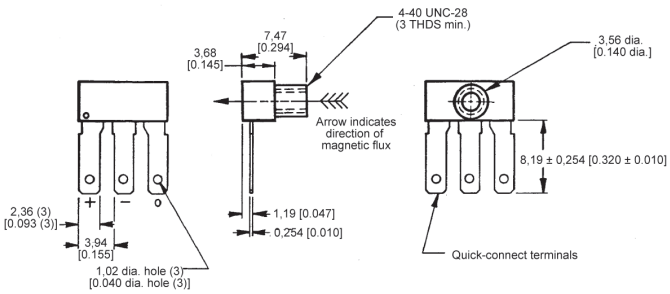

OPTIONS

Unipolar

SUPPLY VOLTAGE	OPERATE POINT	RELEASE POINT	REFERENCE
6 Vdc to 16 Vdc	34.0 mT [340 G] max.	3.0 mT [30 G] min.	513SS16
4.5 Vdc to 9.0 Vdc	40.0 mT [400 G] max.	5.7 mT [57 G] min.	55SS13

Bipolar

SUPPLY VOLTAGE	OPERATE POINT	RELEASE POINT	REFERENCE
6 Vdc to 16 Vdc	14.0 mT [140 G] max.	-14 mT [-140 G] min.	517SS16

6SS Series Hall-effect Digital Position Sensors

6SS Series position sensors act on unipolar targets, provide dual output and function as a magnetically operated solid state switch.

Package style: PCB DIP IC
Operating temperature: -40 °C to 150 °C [-40 °F to 302 °F]
-40 °C to 100 °C [-40 °F to 212 °F]
Output type: Sink

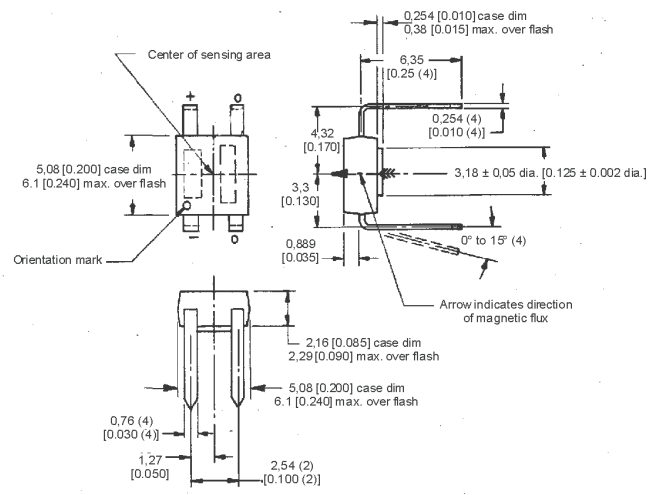

SUPPLY VOLTAGE	OPERATE POINT	RELEASE POINT	REFERENCE
6 Vdc to 16 Vdc	49.5 mT [495 G] max.	5.0 mT [50 G] min.	613SS2
4.5 Vdc to 9.0 Vdc	57.5 mT [575 G] max.	8.2 mT [82 G] min.	65SS4

103SR Series Cylindrical Hall-effect Position Sensors

Hall-effect position sensors in a rugged aluminum housing. These position sensors meet NEMA 3, 3R, 12 and 13 sealing requirements.

Package style: Aluminum
Operating temperature: -40 °C to 100 °C [-40 °F to 212 °F]

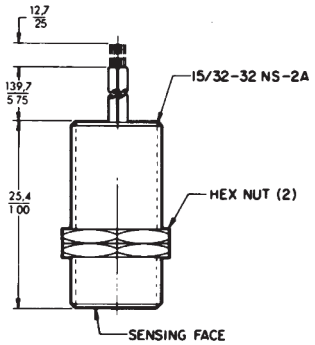

Linear

MAGNETIC RANGE	SUPPLY VOLTAGE	SENSITIVITY @ 25 °C	REFERENCE
-670 to 670 Gauss	4.5 Vdc to 10.5 Vdc	3.125 mV/G	103SR19A-1

Unipolar

OPERATING POINT (MAX.)	RELEASE POINT (MIN.)	SUPPLY VOLTAGE	REFERENCE
400 Gauss	250 Gauss	4.5 Vdc to 24 Vdc	103SR13A-1
90 Gauss	45 Gauss	4.5 Vdc to 24 Vdc	103SR14A-1

Bipolar

OPERATING POINT (MAX.)	RELEASE POINT (MIN.)	SUPPLY VOLTAGE	REFERENCE
50 Gauss	-50 Gauss	4.5 Vdc to 24 Vdc	103SR17A-1

Bipolar latching

OPERATING POINT (MAX.)	RELEASE POINT (MIN.)	SUPPLY VOLTAGE	REFERENCE
50 Gauss	-50 Gauss	4.5 Vdc to 24 Vdc	103SR18A-1

SR3/SR4 Series Cylindrical Digital Position Sensors

The SR3 Series Hall-effect digital position sensors are enclosed in a plastic cylindrical housing and meet NEMA 3, 3R, 3S, 4, 4X, 12 and 13 requirements. The sensors are capable of operation at frequencies exceeding 100 Hz. The SR4 Series digital position sensors contain a magnetoresistive sensing element. The SR4 Series will typically sense either a north or south pole at a level of 15 Gauss.

Package style: Plastic - PBT
Operating temperature: -40 °C to 85 °C [-40 °F to 185 °F]

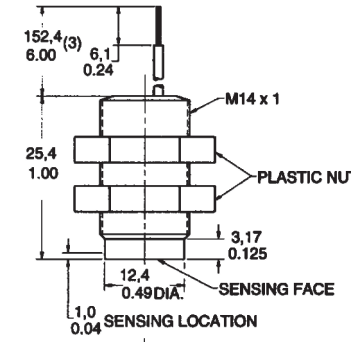

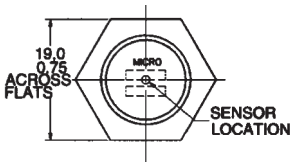

OPTIONS

Bipolar

OPERATING POINT (MAX.)	RELEASE POINT (MIN.)	SUPPLY VOLTAGE	REFERENCE
90 Gauss	-90 Gauss	4.5 Vdc to 24 Vdc	SR3B-A1

Unipolar

OPERATING POINT (MAX.)	RELEASE POINT (MIN.)	SUPPLY VOLTAGE	REFERENCE
150 Gauss	-50 Gauss	4.5 Vdc to 24 Vdc	SR3C-A1
400 Gauss	185 Gauss	4.5 Vdc to 24 Vdc	SR3F-A1
350 Gauss	260 Gauss	4.5 Vdc to 24 Vdc	SR3G-A1

Omnipolar

OPERATING POINT (MAX.)	RELEASE POINT (MIN.)	SUPPLY VOLTAGE	REFERENCE
25 Gauss	5 Gauss	3.8 Vdc to 30 Vdc	SR4P3-A1

SR13 Series Hall-effect Digital Position Sensors

SR13 series Hall-effect digital position sensors permit quick and easy sensor installation, with snap-in and flat mount sensor packages, and can house any of the present SS400 Series sensors or any similarly sized sensing elements.

Package style: Plastic snap-in
Supply voltage: 3.8 Vdc to 30 Vdc
Operating temperature: -40 °C to 150 °C [-40 °F to 302 °F]

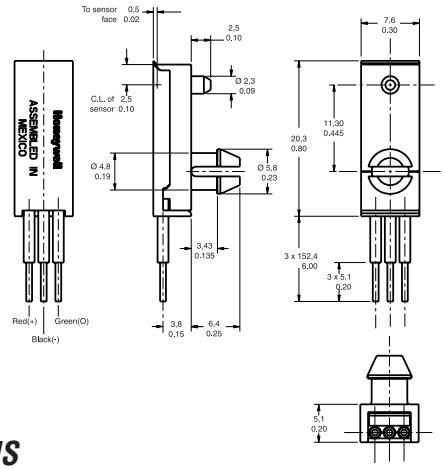

OPTIONS

Maximum Operating Point and Minimum Release Point are specified @ 25 °C

Unipolar

OPERATING POINT (MAX.)	RELEASE POINT (MIN.)	REFERENCE
180 Gauss	75 Gauss	SR13C-A1
115 Gauss	20 Gauss	SR13D-A1
390 Gauss	235 Gauss	SR13F-A1

Bipolar latching

OPERATING POINT (MAX.)	RELEASE POINT (MIN.)	REFERENCE
85 Gauss	-85 Gauss	SR13R-A1

SR16 Series Cost-effective Digital Vane Sensors

SR16 Series competitively priced Hall-effect digital vane sensors contain an internal magnet and Hall-effect sensor mounted in a dual tower configuration.

Package style: Dual tower
Supply voltage: 3.8 Vdc to 30 Vdc
Operating temperature: -20 °C to 85 °C [-4 °F to 185 °F]

OPTIONS

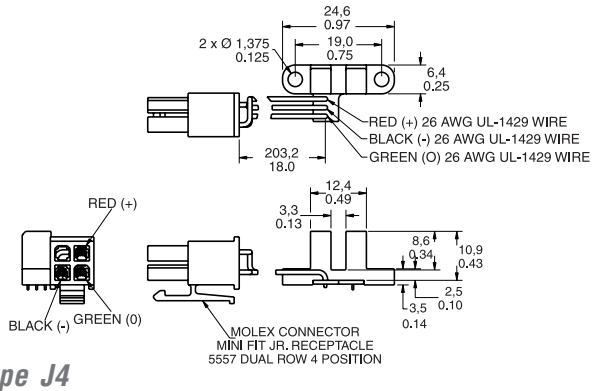

Type J4

ACKAGE STYLE	REFERENCE
PCB/Molex 5557 connector	SR16C-J4

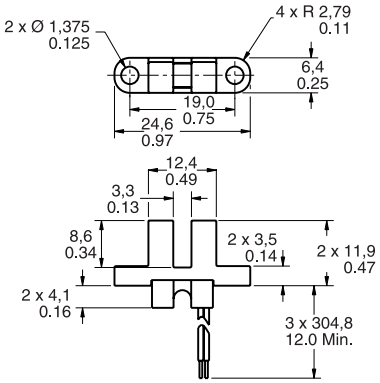

Type J6

ACKAGE STYLE	REFERENCE
Wire exit	SR16C-J6

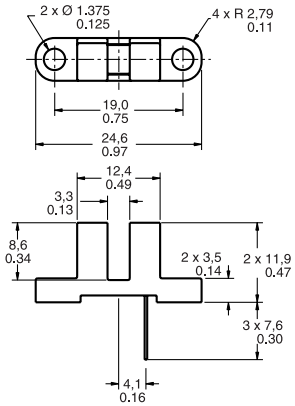

Type N

PACKAGE STYLE	REFERENCE
PCB mount leads	SR16C-N

SR17 Series Cost-effective Digital Vane Sensors

SR17 Series competitively priced Hall-effect digital vane sensors are designed for position and speed sensing and are offered in a side-mount twin tower package.

Package style: Side looker mounting
Supply voltage: 3.8 Vdc to 30 Vdc
Operating temperature: -20 °C to 85 °C [-4 °F to 185 °F]

OPTIONS

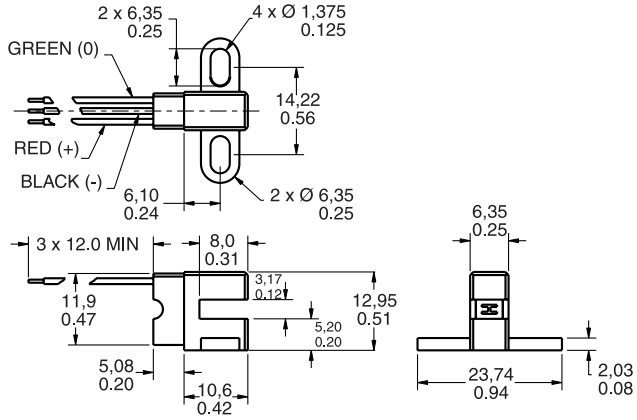

Type J6

PACKAGE STYLE	REFERENCE
Side mount wire exit	SR17C-J6

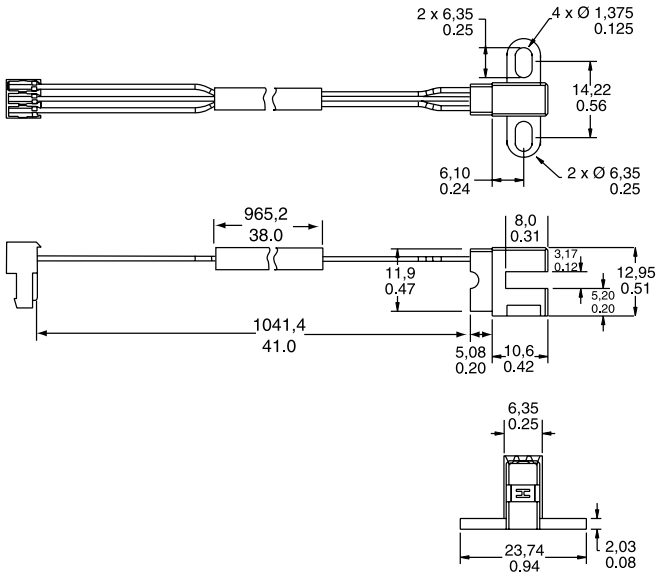

Type J7

PACKAGE STYLE	REFERENCE
41 in wire leads and connector	SR17C-J7

Infrared Products

Optoelectronics is the integration of optical principles and semi-conductor electronics. Optoelectronic components are reliable, cost-effective sensors. Standard infrared emitting diodes (IREDs), IR detectors and assemblies are covered.

Infrared sensors are often used for presence sensing, motion sensing, position encoding, limit sensing, movement detection and counting.

Infrared Emitting Diodes

OPTIONS

Metal package, end-emitting

Coaxial, lead case - SE1450/1470(L)

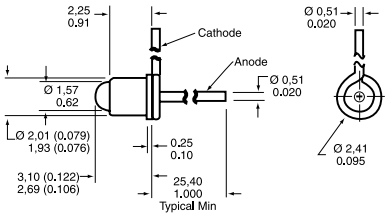

Miniature pill pack - SE2460/2470

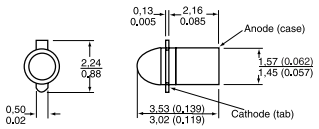

TO-46, flat window - SE3455/3470

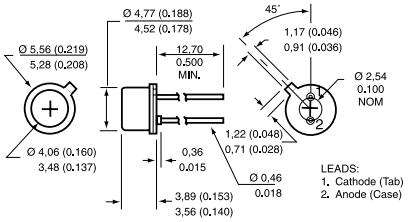

TO-46, dome lensed - SE5455/5470

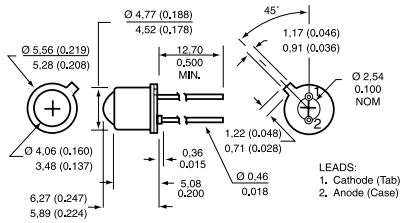

Operating temperature: -55 °C to 125 °C [-67 °F to 257 °F]

OUTPUT WAVELENGTH (nm)	BEAM ANGLE (°)	POWER OUTPUT	REFERENCE
935	24	0.70 mW min.	SE1450-003L
880	24	1.10 to 4.50 mW/cm²	SE1470-003L
935	18	1.00 mW min.	SE2460-003
880	18	6.0 mW/sr min.	SE2470-002
935	90	5.4 mW min.	SE3455-004
880	90	10.5 mW min.	SE3470-003
935	20	4.8 mW min.	SE5455-003
880	20	3.5 mW/cm² min.	SE5470-004

Plastic package

T1, end-emitting - SEP8505/8705

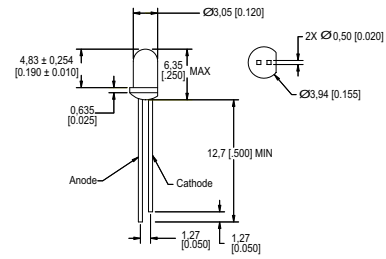

Side-emitting - SEP8506/8706

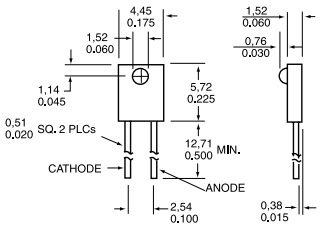

Side-emitting - SEP8736

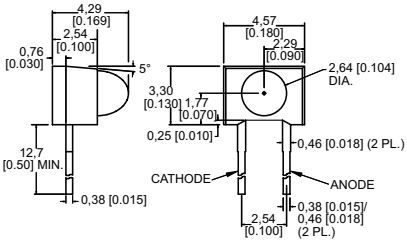

Operating temperature: -40 °C to 85 °C [-40 °F to 185 °F]

OUTPUT WAVELENGTH (nm)	BEAM ANGLE (°)	POWER OUTPUT	REFERENCE
935	15	2.0 to 4.0 mW/cm²	SEP8505-003
935	50	0.33 to 0.52 mW/cm²	SEP8506-002
880	15	2.7 to 7.8 mW/cm²	SEP8705-003
880	10	1.7 to 3.0 mW/cm²	SEP8736-003

Ceramic discrete surface mount - glass lens

SME2470

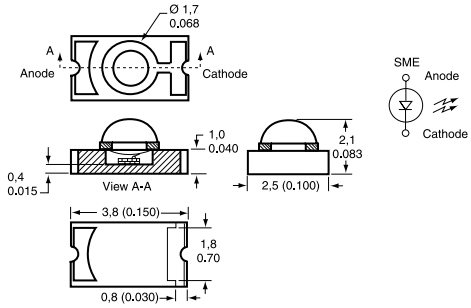

Note:
This device can be mounted with the lens up or down, looking through PCB.

Operating temperature: -55 °C to 125 °C [-67 °F to 257 °F]

OUTPUT WAVELENGTH (NM)	BEAM ANGLE (°)	POWER OUTPUT	REFERENCE
880	24	0.60 mW/cm² min.	SME2470-021

Phototransistors

OPTIONS

Metal package

Coaxial, lead case - SD1440(L)

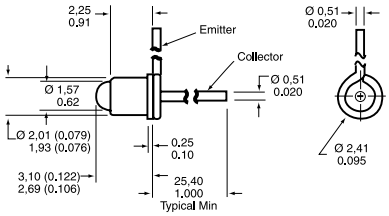

Miniature pill pack - SD2440

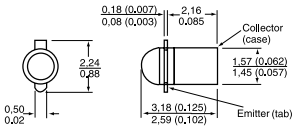

TO-46, flat window - SD3443

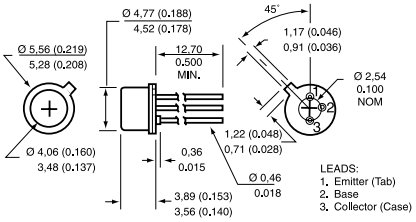

TO-46, dome lensed - SD5443

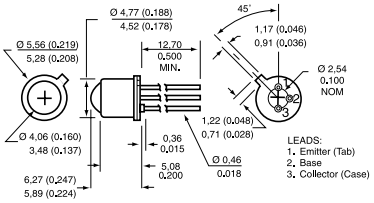

Operating temperature: -55 °C to 125 °C [-67 °F to 257 °F]

ANGULAR RESPONSE (°)	LIGHT CURRENT MINIMUM (mA)	REFERENCE
24	3.0	SD1440-003L
48	7.0	SD2440-004
90	2.0	SD3443-003
18	8.0	SD5443-003

Plastic package

T1, end-looking - SDP8405

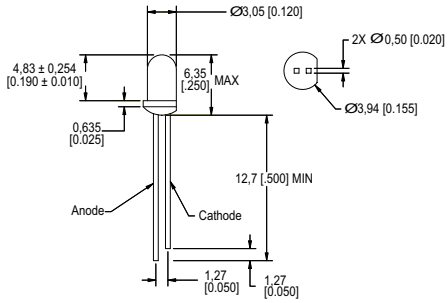

Side-looking - SDP8406

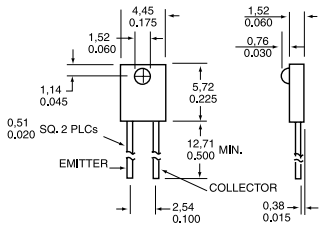

Side-looking - SDP8436

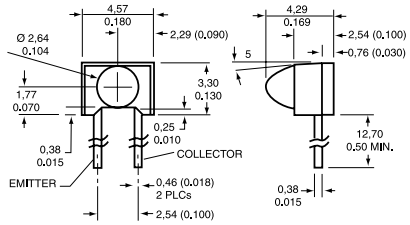

Operating temperature: -40 °C to 85 °C [-40 °F to 185 °F]

ANGULAR RESPONSE (°)	LIGHT CURRENT MINIMUM (mA)	REFERENCE
20	12.0	SDP8405-003
50	1.80	SDP8406-002
18	7.0	SDP8436-003

Ceramic discrete surface mount - glass lens

Top-looking - SMD2420/2440

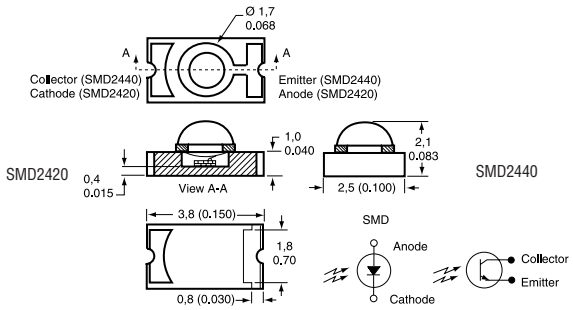

Note:
This device can be mounted with the lens up or down, looking through PCB.

Operating temperature: -55 °C to 125 °C [-67 °F to 257 °F]

ANGULAR RESPONSE (°)	LIGHT CURRENT MINIMUM (mA)	REFERENCE
28	3.0	SMD2440-012

Optoschmitt Detectors

OPTIONS

Metal package

TO-46, dome lensed

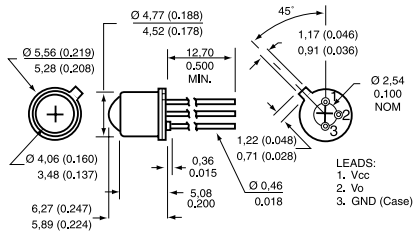

Operating temperature: -40 °C to 100 °C [-40 °F to 212 °F]
Supply voltage: 4.5 V to 16.0 V
Output: 10 kOhm Pull-up
Angular response: 12°

OUTPUT LOGIC	TURN-ON THRESHOLD IRRADIANCE	REFERENCE
Buffer	2.5 mW/cm² max.	SD5600-001
Inverter	2.5 mW/cm² max.	SD5610-001
Buffer	0.25 mW/cm²	SD5620-001
Inverter	0.25 mW/cm²	SD5630-001

Plastic package

Side-looking

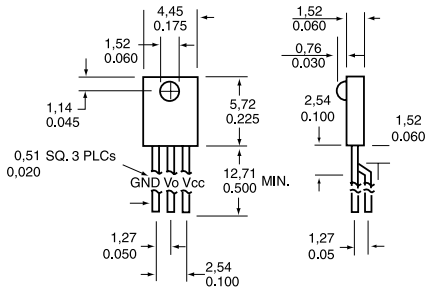

Operating temperature: -40 °C to 85 °C [-40 °F to 185 °F]
Supply voltage: 4.5 V to 12.0 V
Output: 10 kOhm Pull-up
Angular response: 50°

OUTPUT LOGIC	TURN-ON THRESHOLD IRRADIANCE	REFERENCE
Buffer	2.5 mW/cm² max.	SDP8600-001

Encoder Sensors

Operating temperature: -40 °C to 85 °C [-40 °F to 185 °F]
Turn-on threshold irradiance: 0.05 mW/cm² to 2.0 mW/cm²
Supply voltage: 4.5 Vdc to 5.5 Vdc
Package style: Plastic, PC mount

OPTIONS

Side-looking - HLC2701/HLC2705

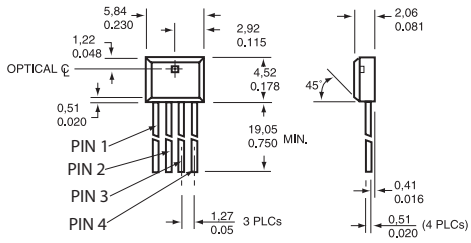

LEADS

HLC 2701	HLC2705
1. B out	1. Direction out
2. Vcc	2. Vcc
3. Gnd	3. Gnd
4. A out	4. Speed (Tach) out

PC mount - HOA0901/0902

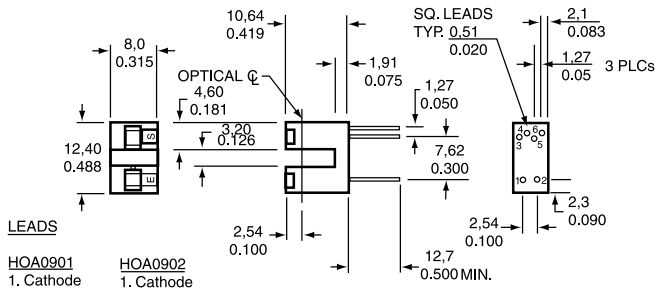

LEADS

HOA0901	HOA0902
1. Cathode	1. Cathode
2. Anode	2. Anode
3. Output A	3. Speed
4. GND	4. GND
5. Vcc	5. Vcc
6. Output B	6. Direction

OUTPUT OPTION	REFERENCE
A and B output	HLC2707-001
Speed and direction	HLC2705-001
Direction, inverting logic	HOA0901-011*
Speed and direction, 2 tachometer	HOA0902-011*

* -012 version not shown, has dual mounting tabs

NOTICE

Housings are soluble in chlorinated hydrocarbons and ketones. Recommended cleaning agents are methanol and isopropanol.

Reflective Sensors

OPTIONS

Metal components

Converging/focused optical axis - HOA1180

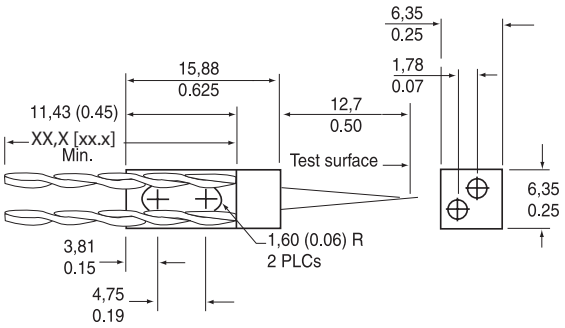

Converging/focused optical axis - HOA2498

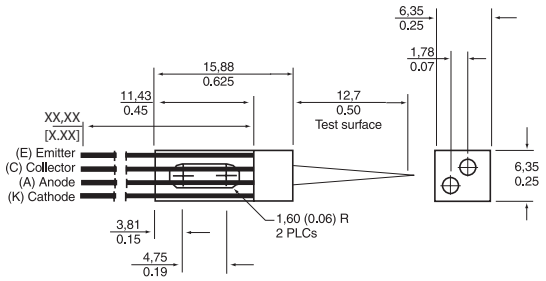

Operating temperature: -55 °C to 100 °C [-67 °F to 212 °F]
Output: Transistor

ON-STATE COLLECTOR CURRENT	REFERENCE
0.16 mA	HOA1180-002
0.16 mA	HOA2498-002

Plastic package

HLC1395 Series, short distance detection

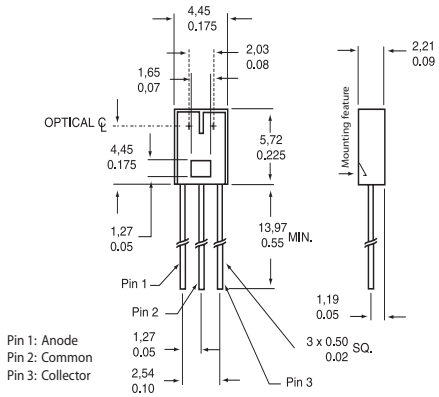

(1,0 mm/0.04 in) point of optimum response

HOA Series

Converging/focused optical axis - HOA0149

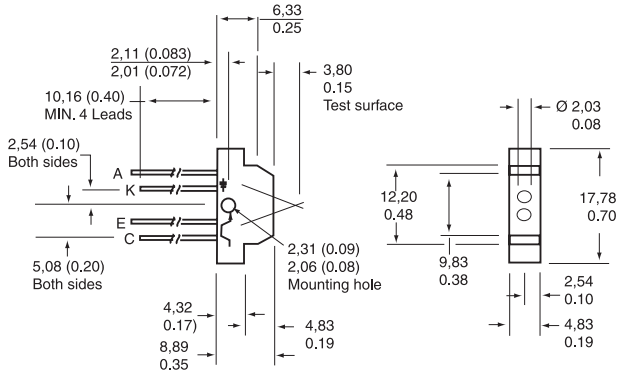

HOA1397

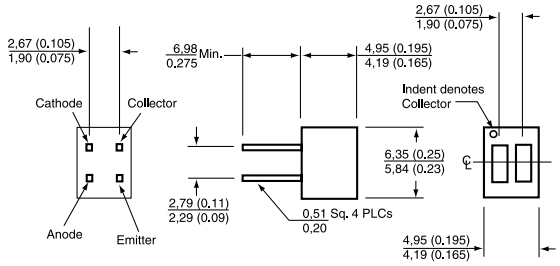

(1,27 mm/0.05 in) point of optimum response

Converging/focused optical axis - HOA1405

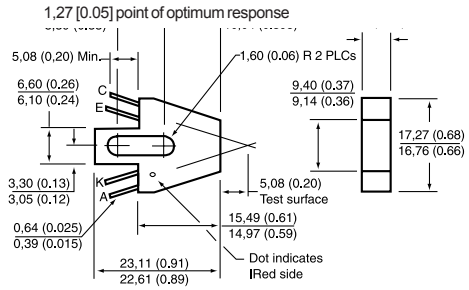

Operating temperature: -40 °C to 85 °C [-40 °F to 185 °F]
Output: Transistor

	ON-STATE COLLECTOR CURRENT	REFERENCE
	0.60 mA	HLC1395-002
Low profile	1.00 mA	HOA0149-001
	0.70 mA	HOA1397-002
	0.80 mA	HOA1405-002

NOTICE

Housings are soluble in chlorinated hydrocarbons and ketones. Recommended cleaning agents are methanol and isopropanol.

Transmissive Sensors, Phototransistor Output

OPTIONS

Metal components

HOA1877

Aperture (emitter and detector): Ø 1,27 mm [0.050 in]

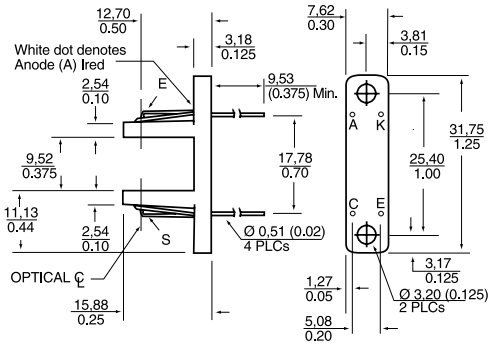

Operating temperature: -55 °C to 100 °C [-67 °F to 212 °F]
Output: Transistor

ON-STATE COLLECTOR CURRENT	REFERENCE
0.1 mA	HOA1877-001

Plastic components

HOA086X/087X (L,N,T,P ear versions available)

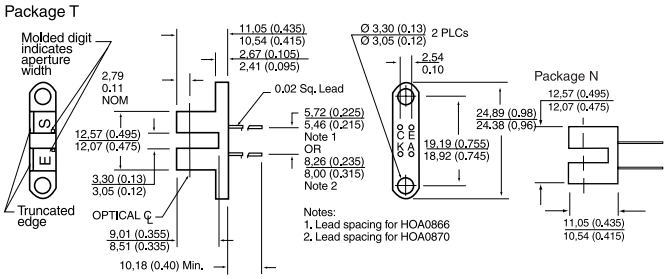

HOA1879

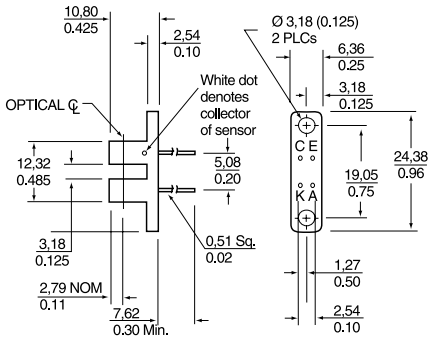

NOTICE

Housings are soluble in chlorinated hydrocarbons and ketones. Recommended cleaning agents are methanol and isopropanol.

HOA1882

Aperture (emitter and detector): Ø 1,52 mm [0.060 in]

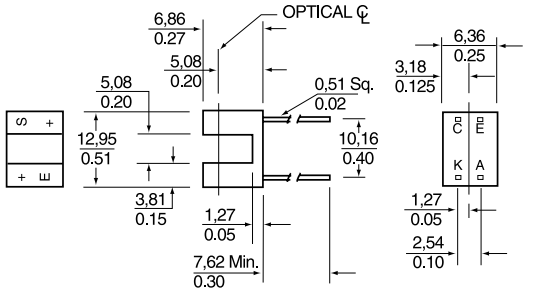

Plastic components, wire leads

HOA088X/089X (L,N,T, P ear versions available)

Wire colour code and functions:

Red - IRED Anode
Black - IRED Cathode
White - Detector Collector
Green - Detector Emitter

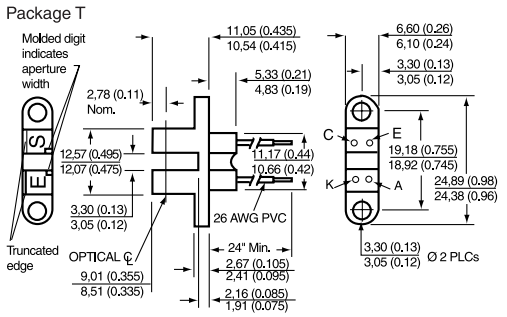

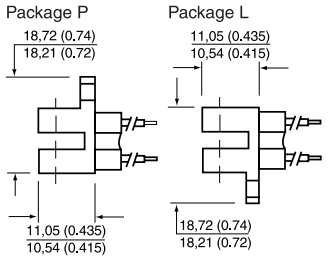

HOA1870

Wire colour code and functions:

Orange - IRED Anode
Green - IRED Cathode
White - Detector Collector
Blue - Detector Emitter

Aperture (emitter and detector): 0,15 mm [0.006 in] wide

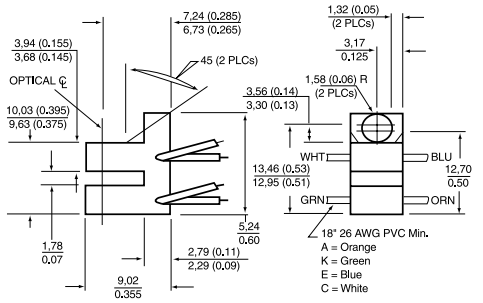

Operating temperature: -40 °C to 85 °C [-40 °F to 185 °F]
Output: Transistor

	ON-STATE COLLECTOR CURRENT	REFERENCE
	1.00 mA	HOA0866-T55
Opaque housing	0.50 mA	HOA0870-N51
	0.50 mA	HOA0880-P51
Opaque housing	0.50 mA	HOA0890-L55
	0.30 mA	HOA1870-031
	0.50 mA	HOA1879-015
	1.80 mA	HOA1882-012

Transmissive Sensors, Optoschmitt Output

OPTIONS

Plastic components

HOA096X/097X
HOA696X/697X

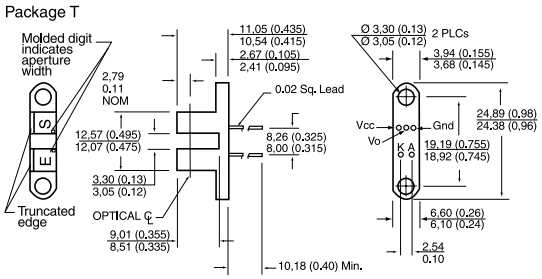

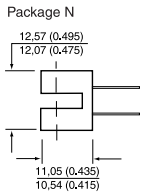

Plastic components, wire leads

HOA698X/699X (L,N,T, P ear versions available)

Wire colour code and functions:

Red - IRED Anode
Black - IRED Cathode
Green - Detector Ground
White - Detector Vcc
Blue - Detector Output

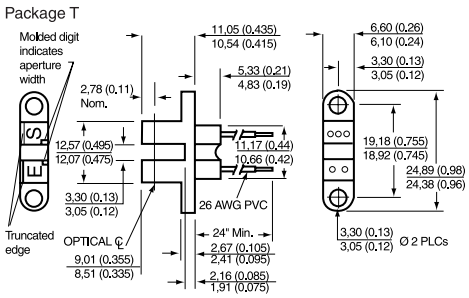

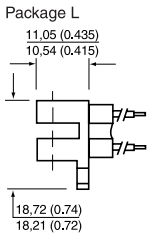

Plastic components, integral 3 pin connector

HOA7720/30

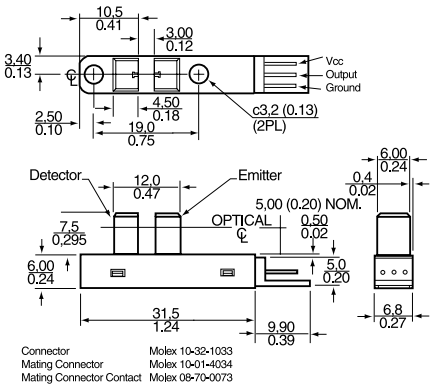

Operating temperature: -40 °C to 70 °C [-40 °F to 158 °F]

	OUTPUT	OUTPUT LOGIC	HYSTERESIS	REFERENCE
	10 kOhm Pull-up	Buffer	10 %	HOA0961-N51
Opaque housing	10 kOhm Pull-up	Buffer	10 %	HOA0971-N51
	Open-Collector	Inverter	5 %	HOA6963-N51
Opaque housing	Totem-Pole	Inverter	5 %	HOA6972-N55
	Open-Collector	Buffer	5 %	HOA6981-L51
Opaque housing	Totem-Pole	Buffer	5 %	HOA6990-T51
	Totem-Pole	Inverter	5 %	HOA7720-M22
	Open-Collector	Inverter	5 %	HOA7730-M22

NOTICE

Housings are soluble in chlorinated hydrocarbons and ketones. Recommended cleaning agents are methanol and isopropanol.

HOD Series Single Fiber Duplex Modules

The HOD Series allows full duplex communication over a single fiber link. These products may also be used where a dual fiber solution is neither possible nor economical. Each duplex module consists of one on-axis port and one off-axis port, each configured with the appropriate devices.

Link bandwidth: dc to 160 MHz
Link budgets: 2 km [1.24 miles] or greater
Operating temperature: 0 °C to 70 °C [32 °F to 158 °F]

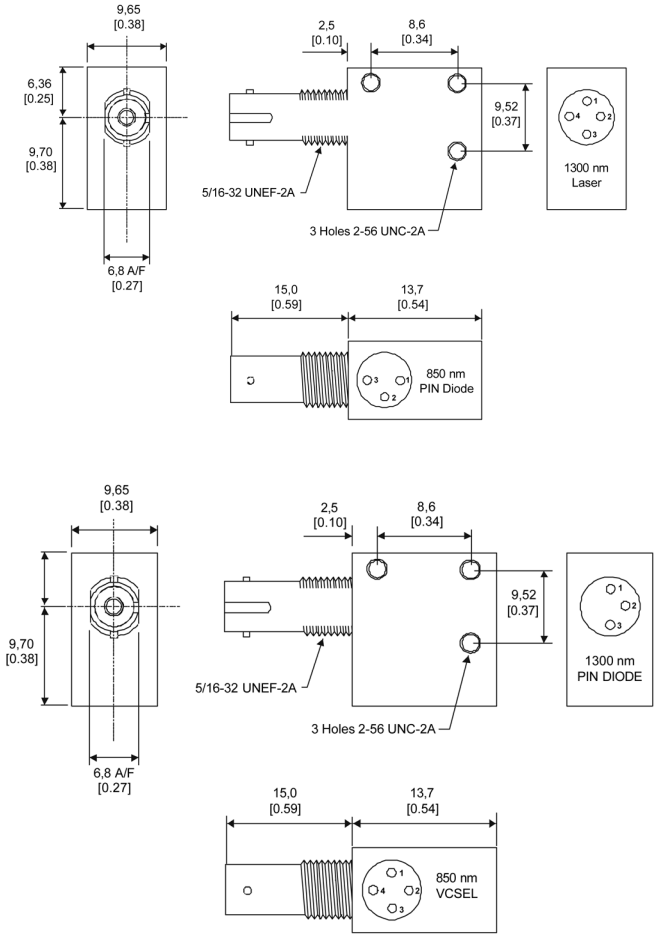

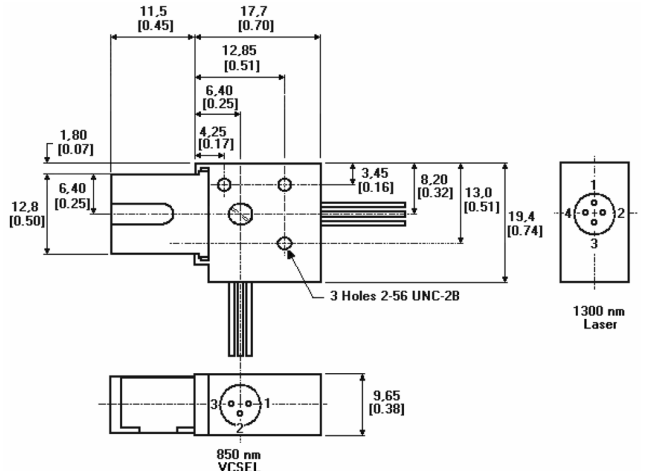

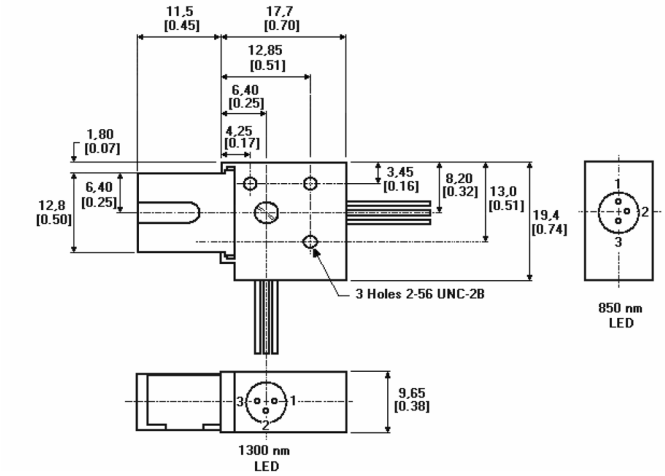

ST housing

PORT 1 DEVICE	PORT 2 DEVICE	REFERENCE
1300 nm LED/Laser	850 nm PIN	HOD2236-111/BBA
1300 nm PIN	VCSEL	HOD4090-111/BBA

SC connector

PORT 1 DEVICE	PORT 2 DEVICE	REFERENCE
1300 nm LED/Laser	VCSEL	HOD2294-111/EBA
850 nm LED	1300 nm LED/Laser	HOD1121-411/EBA

Current Sensors

Current sensors monitor ac or dc current. Included are adjustable linear, null balance, digital and linear current sensors.

Digital current sensors can sound an alarm, start a motor, open a valve or shut down a pump. The linear signal duplicates the waveform of the current being sensed, and can be used as a feedback element to control a motor or regulate the amount of work being done by a machine.

Closed Loop Current Sensors

Closed loop current sensors measure ac, dc and impulse currents over 0 A to 25 A, 0 A to 50 A, 0 A to 100 A, 0 A to 600 A and 0 A to 1200 A ranges. The CSN series is based on the Hall-effect principle and the null balance or zero magnetic flux method (feedback system). The magnetic flux in the sensor core is constantly controlled at zero. The amount of current required to balance zero flux is the measure of the primary current flowing through the conductor, multiplied by the ratio of the primary to secondary windings. This closed loop current is the output from the device and presents an image of the primary current reduced by the number of secondary turns at any time. This current can be expressed as a voltage by passing it through a resistor.

The CSN Series has a high overload capacity, a high level of electrical insulation between primary and secondary circuits and a rapid response rate. Lightweight and compact, and with no restriction on input current waveform, the sensors are often ideal for variable speed drives, power supplies, feedback control systems, robotics/welding equipment and general overcurrent protection.

Sensed current type: ac or dc
EMC: EN 50082-2, EN 50081-2
Accuracy: <0.5 %
Housing material: UL94-V0

CSN Series Magnetoresistive (MR) Current Sensor

The CSN Series MR Current Sensor builds on patented Honeywell technology to offer superior sensor performance and accuracy in current measuring applications. There is virtually no offset drift over the entire operating temperature range. The sensor operates from a +5 V unipolar supply and has an accessible, internal 2.5 V voltage reference. The sensor can operate from either the internal voltage reference or an external voltage reference, thus enabling several sensors to be used without offset imbalance.

Mounting: PCB on 11 pins
Accuracy: ±0.32 % @ -40 °C to 85 °C [-40 °F to 185 °F]
Thermal drift of offset current: < ±10 uA @ -40 °C to 85 °C [-40 °F to 185 °F]
Internal reference voltage: +2.5 Vdc

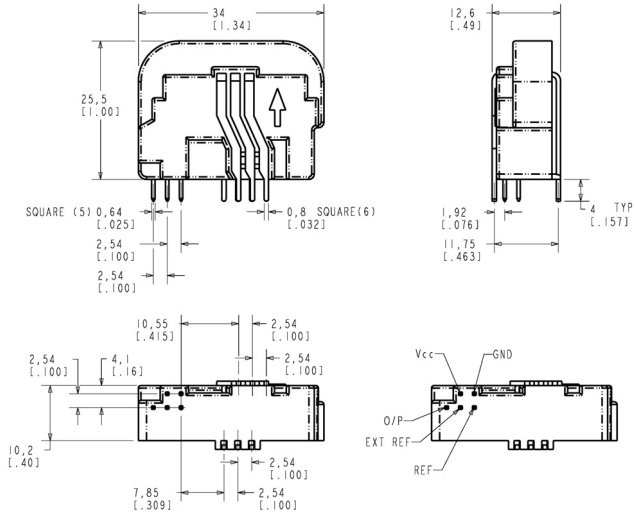

SENSED CURRENT RANGE	COIL TURNS	SUPPLY VOLTAGE	REFERENCE
±56 A	2000 (50 Ohm coil)	+5 Vdc	CSNX25

CSN Series (continued)

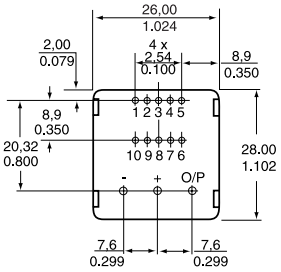

Multi turn PCB mounted

Mounting: PCB on 13 pins

SENSED CURRENT RANGE	COIL TURNS	SUPPLY VOLTAGE	REFERENCE
±36 A	1000 (110 Ohm coil)	±15 Vdc	CSNE151

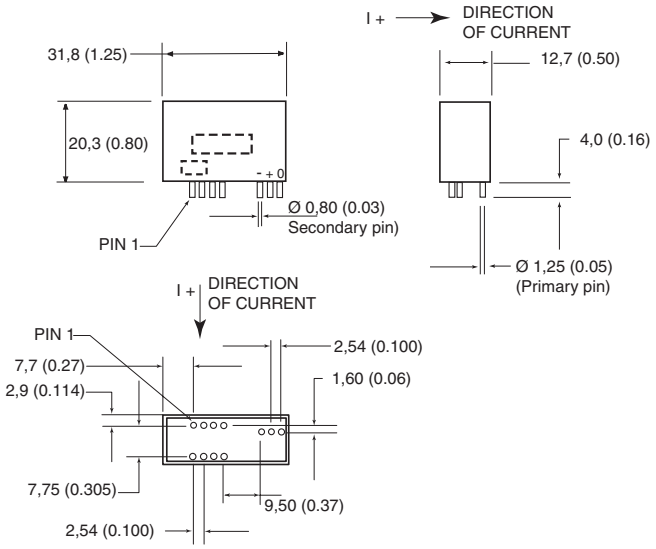

Mounting: PCB on 11 pins

SENSED CURRENT RANGE	NOMINAL CURRENT	COIL TURNS	SUPPLY VOLTAGE	REFERENCE
±90 A	25 A	1000 (66 Ohm coil)	±12 Vdc to 15 Vdc	CSNE151-100
±90 A	50 A	1000 (66 Ohm coil)	±12 Vdc to 15 Vdc	CSNE151-200

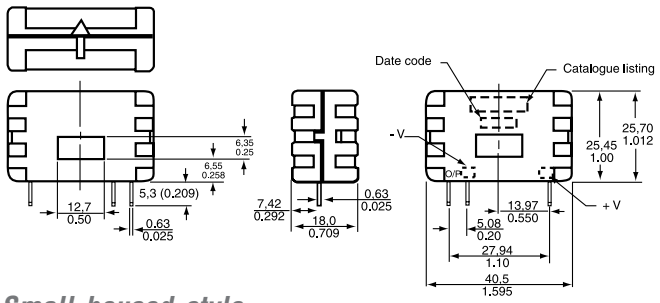

Small housed style

Mounting: PCB on 3 pins

SENSED CURRENT RANGE	COIL TURNS	SUPPLY VOLTAGE	REFERENCE
±70 A	1000 (90 Ohm coil)	±15 Vdc	CSNA111
±90 A	1000 (50 Ohm coil)	±13 Vdc	CSNC241
±100 A	2000 (160 Ohm coil)	±15 Vdc	CSNB121
±100 A	2000 (130 Ohm coil)	±15Vdc	CSNB131

Small housed family

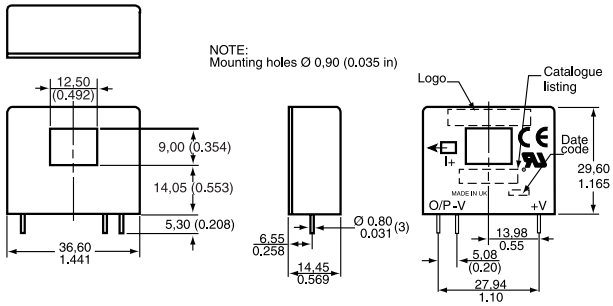

Pinout style 'A'

Mounting: PCB on 3 pins

SENSED CURRENT RANGE	COIL TURNS	SUPPLY VOLTAGE	REFERENCE
±90 A	1000 (30 Ohm coil)	±12 Vdc to ±15 Vdc	CSNP661
±150 A	2000 (100 Ohm coil)	±12 Vdc to ±15 Vdc	CSNT651
±180 A	2000 (100 Ohm coil)	±15 Vdc	CSNG251

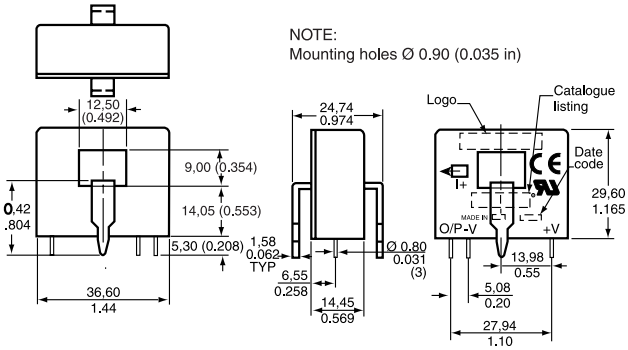

SENSED CURRENT RANGE	COIL TURNS	SUPPLY VOLTAGE	REFERENCE
±90 A	1000 (30 Ohm coil)	±12 Vdc to ±15 Vdc	CSNP661-002
±150 A	2000 (100 Ohm coil)	±12 Vdc to ±15 Vdc	CSNT651-001

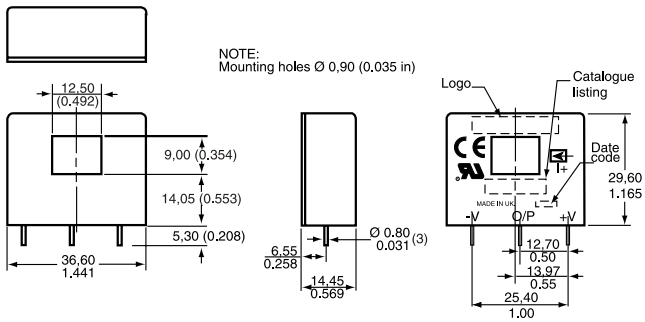

Pinout style 'B'

SENSED CURRENT RANGE	COIL TURNS	SUPPLY VOLTAGE	REFERENCE
±150 A	1000 (30 Ohm coil)	±12 to ±15 Vdc	CSNF161
±180 A	2000 (100 Ohm coil)	±12 to ±15 Vdc	CSNF151
±200 A	2000 (100 Ohm coil)	±12 to ±15 Vdc	CSNR151
±200 A	1000 (30 Ohm coil)	±12 to ±15 Vdc	CSNR161

Small housed family (continued)

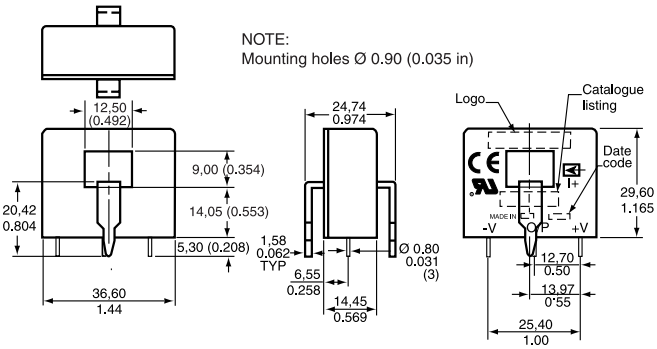

SENSED CURRENT RANGE	COIL TURNS	SUPPLY VOLTAGE	REFERENCE
±150 A	1000 (30 Ohm coil)	±12 Vdc to ±15 Vdc	CSNF161-002
±200 A	2000 (100 Ohm coil)	±12 Vdc to ±15 Vdc	CSNR151-002
±200 A	1000 (30 Ohm coil)	±12 Vdc to ±15 Vdc	CSNR161-002

CSNS Series Closed Loop Current Sensors

The CSNS Series closed loop current sensor offers a flexible solution for measuring currents up to ±600 A. These small sensors have a large primary through hole to accept either a cable or a variety of busbar sizes. The sensors can be mounted vertically or horizontally and come with connection options of integral Molex type connector or a flying lead. The sensors are closed loop devices and based on the principle of Hall effect and null balance method. The output from the current sensor is the balancing current that is the perfect image of the primary current reduced by the number of secondary turns at any time. The current can be expressed as a voltage by passing it through a load resistor.

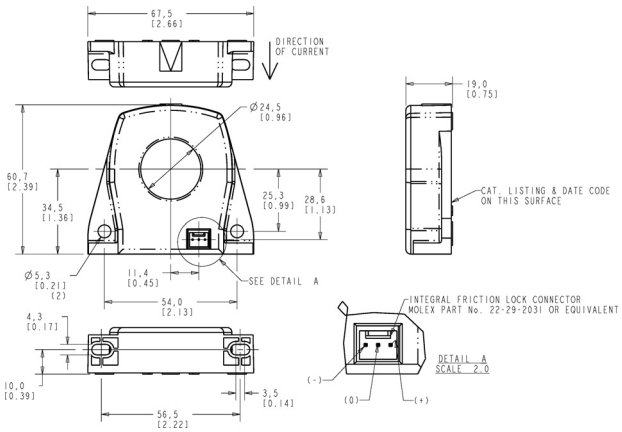

Mid-range housed style

Mounting: Panel (see order guide)
Sensed current range: ±600 A
Coil turns: 2000 (31 Ohm coil)
Supply voltage: ±12 Vdc to ±18 Vdc

CONNECTOR	REFERENCE
Integral Molex type connector (3 pin)	CSNS300M
Integral Molex type connector (4 pin), fully encapsulated	CSNS300M-001
Flying lead and amp-type connector	CSNS300F

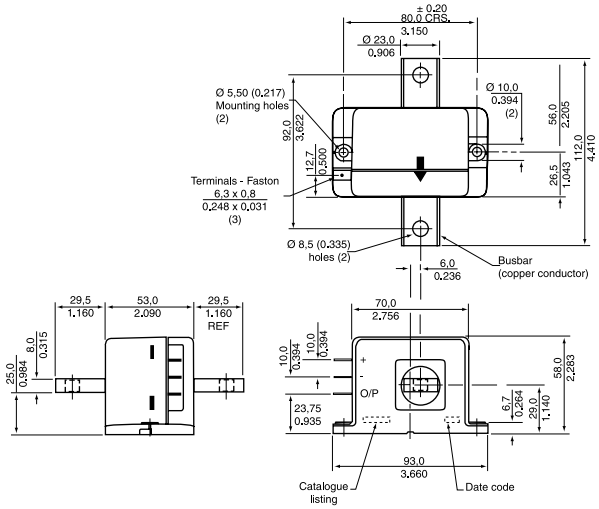

Mounting: Panel, spade terminals x 3

SENSED CURRENT RANGE	COIL TURNS	SUPPLY VOLTAGE	REFERENCE
±600 A	2000 (25 Ohm coil)	±12 Vdc to ±18 Vdc	CSNJ481
±600 A (busbar)	2000 (25 Ohm coil)	±12 Vdc to ±18 Vdc	CSNJ481-001

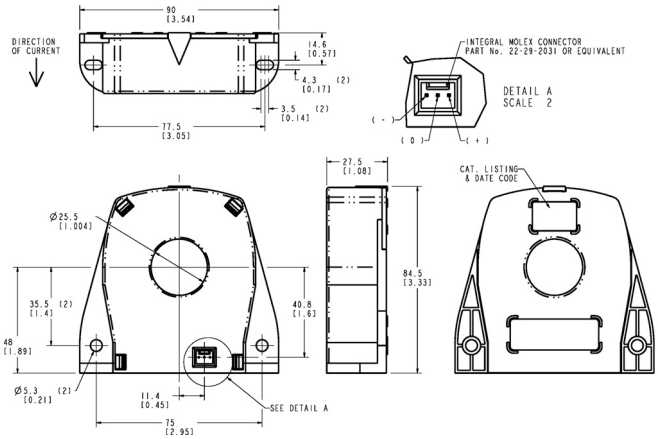

Large-housed style

Mounting: Panel (see order guide)
Sensed current range: ±1200 A
Coil turns: 5000 (50 Ohm coil)
Supply voltage: ±12 Vdc to ±18 Vdc

CONNECTOR	REFERENCE
3 pin Molex	CSNK500M
4 pin Molex	CSNK500M-001

CSNS Series (continued)

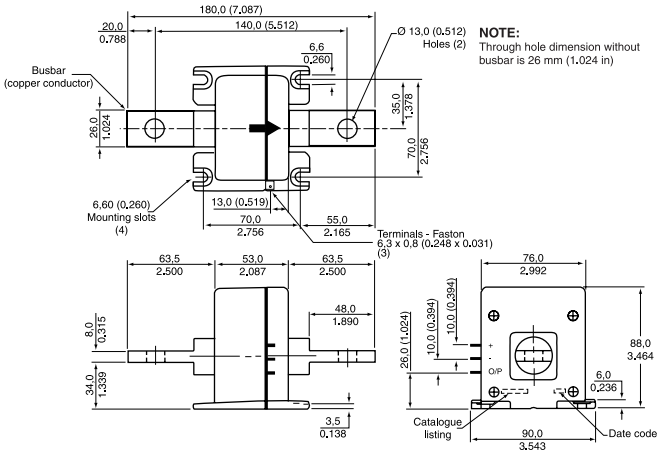

Mounting: Panel, spade terminals x 3

SENSED CURRENT RANGE	COIL TURNS	SUPPLY VOLTAGE	REFERENCE
±1200 A	5000 (50 Ohm coil)	±15 to ±24 Vdc	CSNK591
±1200 A (busbar)	5000 (50 Ohm coil)	±15 to ±24 Vdc	CSNK591-001

Open Loop Current Sensors

CSL Series Linear Current Sensors

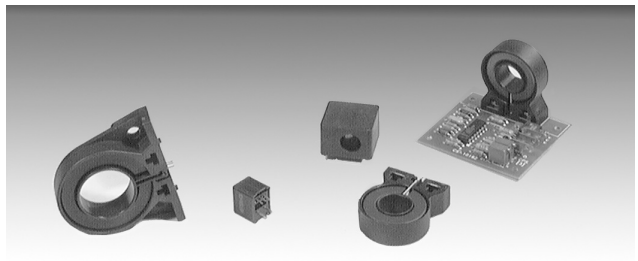

CSL Series linear current sensors incorporate our 91SS12-2 and SS94A1 linear output Hall-effect transducer (LOHET™). These sensors cover measuring ranges from 0 A to 950 A. The sensing element is assembled in a printed circuit board mountable housing. This housing is available in four configurations. Normal mounting is with 0.375 in long 4-40 screw and square nut (not provided) inserted in the housing or a 6-20 self-tapping screw. The combination of the sensor, flux collector and housing comprises the holder assembly. These sensors are ratiometric.

Sensed current type: ac or dc
Housing: PBT polyester

OPTIONS

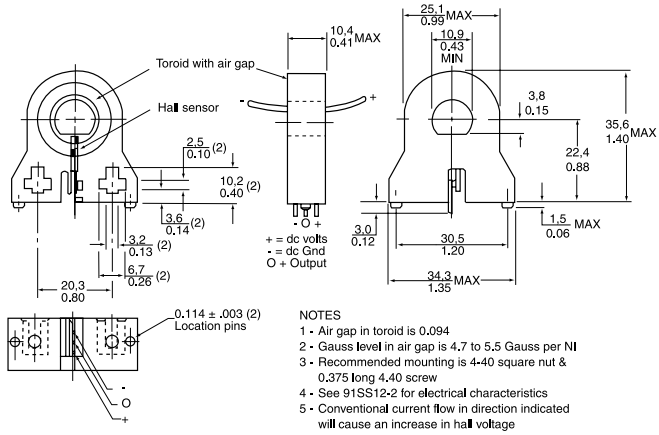

PCB bottom mount

SENSED CURRENT RANGE	SUPPLY VOLTAGE	REFERENCE
0 A to 75 A	8 Vdc to 16 Vdc	CSLA1DE
0 A to 92 A	6 Vdc to 12 Vdc	CSLA2DE
0 A to 150 A	6 Vdc to 12 Vdc	CSLA2DG
0 A to 225 A	8 Vdc to 16 Vdc	CSLA1DJ
0 A to 225 A	6 Vdc to 12 Vdc	CSLA2DJ
0 A to 325 A	8 Vdc to 16 Vdc	CSLA1DK
0 A to 400 A	6 Vdc to 12 Vdc	CSLA2DK

CSL Series (continued)

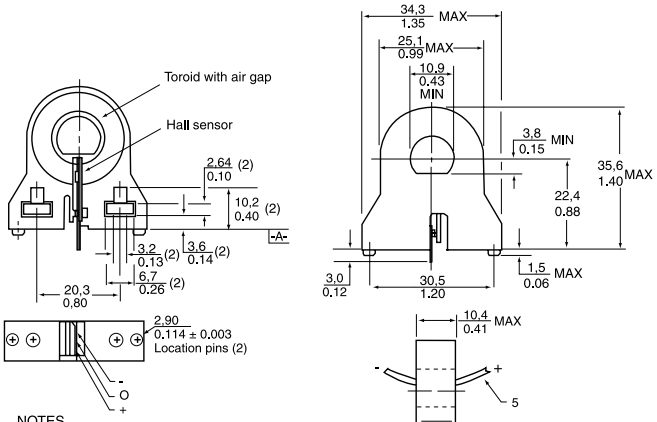

NOTES
1 - Air gap in toroid is 1,90 (0.075)
2 - Gauss level in air gap is 6.0 to 7.0 Gauss per NI
3 - Recommended mounting is 4-40 square nut & 0.375 long 4.40 screw
4 - See 91SS12-2 for electrical characteristics
5 - Conventional current flow in direction indicated will cause an increase in hall voltage

PCB bottom mount

SENSED CURRENT RANGE	SUPPLY VOLTAGE	REFERENCE
0 A to 57 A	8 Vdc to 16 Vdc	CSLA1CD
0 A to 72 A	6 Vdc to 12 Vdc	CSLA2CD
0 A to 100 A	8 Vdc to 16 Vdc	CSLA1CF
0 A to 150 A	8 Vdc to 16 Vdc	CSLA1CH

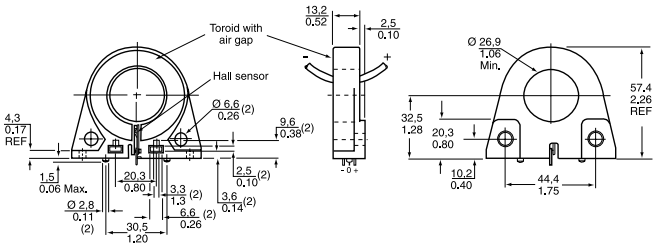

PCB bottom mount

SENSED CURRENT RANGE	SUPPLY VOLTAGE	REFERENCE
0 A to 310 A	6 Vdc to 12 Vdc	CSLA2EJ
0 A to 550 A	6 Vdc to 12 Vdc	CSLA2EL
0 A to 625 A	8 Vdc to 16 Vdc	CSLA1EL
0 A to 765 A	6 Vdc to 12 Vdc	CSLA2EM
0 A to 950 A	6 Vdc to 12 Vdc	CSLA2EN

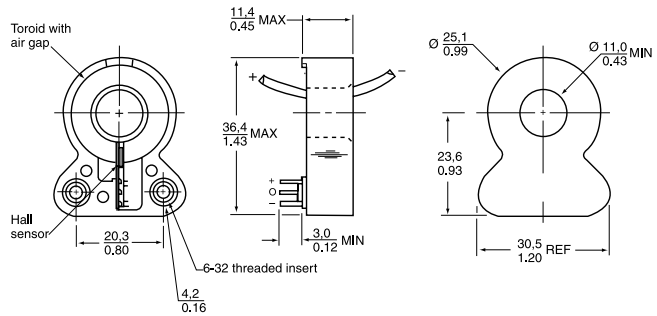

PCB side mount

SENSED CURRENT RANGE	SUPPLY VOLTAGE	REFERENCE
0 A to 57 A	8 Vdc to 16 Vdc	CSLA1GD
0 A to 72 A	6 Vdc to 12 Vdc	CSLA2GD

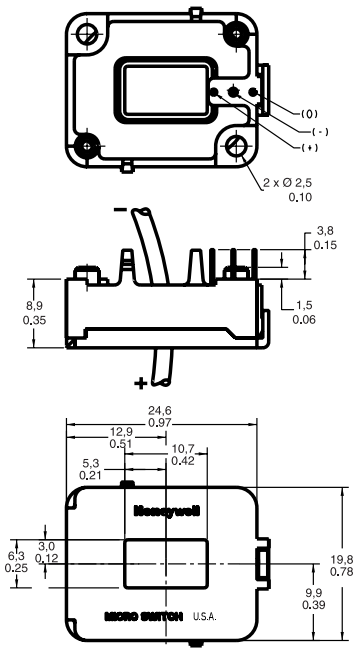

PCB side mount - low cost

SENSED CURRENT RANGE	SUPPLY VOLTAGE	REFERENCE
±45 A	4.5 to 10.5 Vdc	CSLH3A45

CSD Series Digital Current Sensor

Each Honeywell CS Series digital current sensor provides a logic-level output that changes from approximately Vsupply to 0.5 Vdc when the sensed current exceeds the operate point. Each digital sensor will sense ac or dc current, but when sensing ac current, the output will turn off at every zero crossing. Maximum current limited only by conductor size.

Housing: PET polyester
Operating temperature: -25 °C to 85 °C [-13 °F to 185 °F]

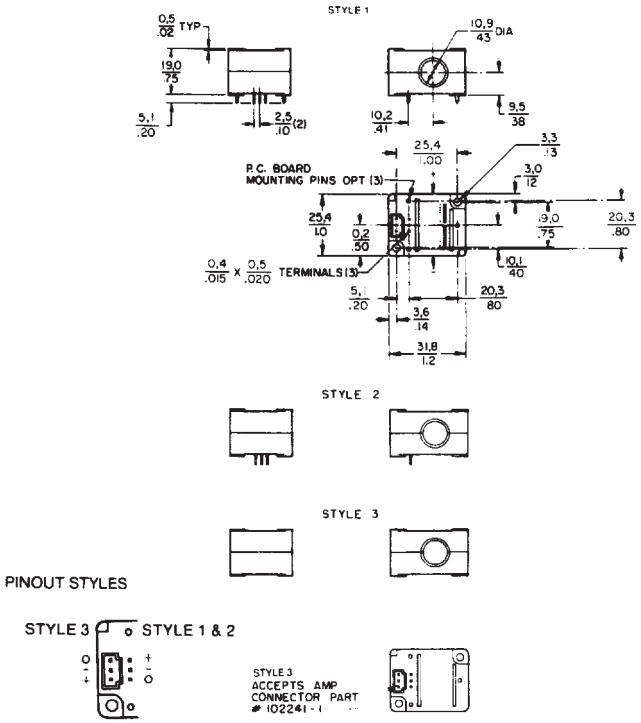

PCB bottom mount

OPERATE CURRENT	SUPPLY VOLTAGE	PACKAGE STYLE	REFERENCE
0.5 A.t nominal*	6 Vdc to 16 Vdc	1	CSDA1AA
0.5 A.t nominal	6 Vdc to 16 Vdc	2	CSDA1BA
0.5 A.t nominal	6 Vdc to 16 Vdc	3	CSDA1DA
3.5 A.t nominal	6 Vdc to 16 Vdc	1	CSDA1AC
3.5 A.t nominal	6 Vdc to 16 Vdc	2	CSDA1BC
3.5 A.t nominal	6 Vdc to 16 Vdc	3	CSDA1DC
0.5 A.t nominal	5 Vdc ±0.2 Vdc	1	CSDC1AA
0.5 A.t nominal	5 Vdc ±0.2 Vdc	2	CSDC1BA
0.5 A.t nominal	5 Vdc ±0.2 Vdc	3	CSDC1DA
3.5 A.t nominal	5 Vdc ±0.2 Vdc	1	CSDC1AC
3.5 A.t nominal	5 Vdc ±0.2 Vdc	2	CSDC1BC
3.5 A.t nominal	5 Vdc ±0.2 Vdc	3	CSDC1DC

* A.t. = Amp turns

Liquid Level Sensors

Honeywell Liquid Level Sensors incorporate a voltage level switch which provides a digital output that denotes the presence or absence of liquid.

The mode of operation is derived from the principle of total internal reflection. An LED and detector are housed within a plastic dome at the head of the device. When no liquid is present, all light from the LED is totally internally reflected from the dome boundary to the detector. When liquid covers the dome, the effective refractive index at the dome/liquid boundary changes, allowing some light from the LED to escape. Thus the amount of light received by the voltage level switch is reduced and the output switches, denoting the presence of liquid. This method of liquid level sensing is very fast and instantaneous for water.

Principle - in air

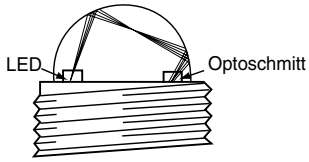

LLE Series Enhanced Liquid Level Sensor

The LLE Series enhanced liquid level sensors use a phototransistor trigger which provides a digital output that denotes the presence or absence of liquid. This series incorporates reverse polarity, over voltage, short circuit and transient protection.

Termination:	250 mm lead wires
Supply voltage:	+5 Vdc to +12 Vdc
Pressure range:	0 bar to 5 bar (plastic housing) 0 bar to 25 bar (metal housing)
Operating temperature:	-25 °C to 80 °C [-13 °F to 176 °F] -40 °C to 125 °C [-40 °F to 257 °F] (high)
Storage temperature:	-30 °C to 85 °C [-22 °F to 185 °F]
Seal washer:	Vamac® or Nitrile rubber (Plastic, threaded options only)
Output function:	High in air

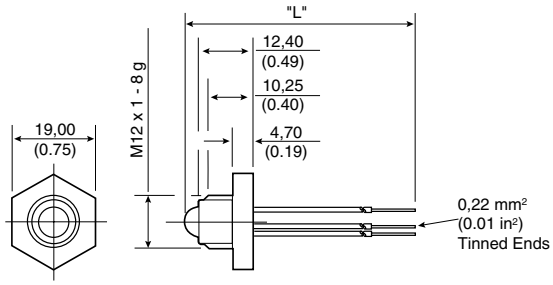

Screw-in, M12 thread, plastic - Type 1

	SEAL WASHER	REFERENCE
	Nitrile rubber	LLE101000
High temperature	Vamac®	LLE101101

Wiring diagram

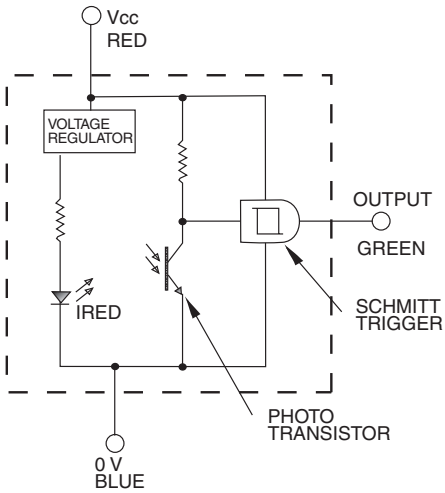

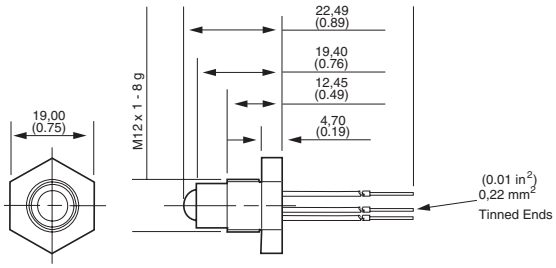

Type 2

	SEAL WASHER	REFERENCE
	Nitrile rubber	LLE102000
High temperature	Vamac®	LLE102101

LLE Series (continued)

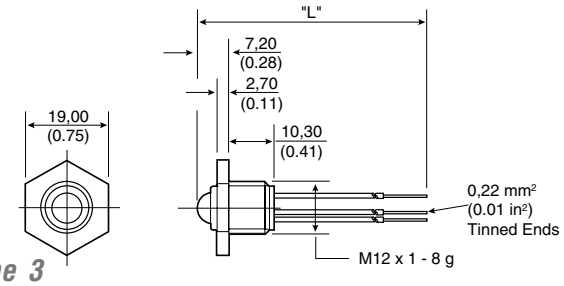

Type 3

	SEAL WASHER	REFERENCE
	Nitrile rubber	LLE103000
High temperature	Vamac®	LLE103101

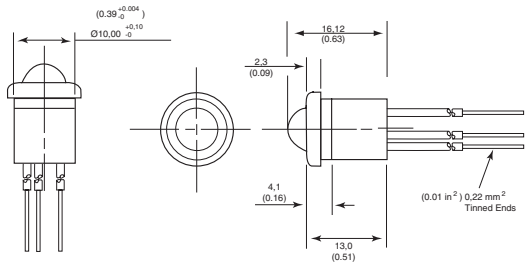

Push-in, plastic - Type 5

	REFERENCE
	LLE105000
High temperature	LLE105100

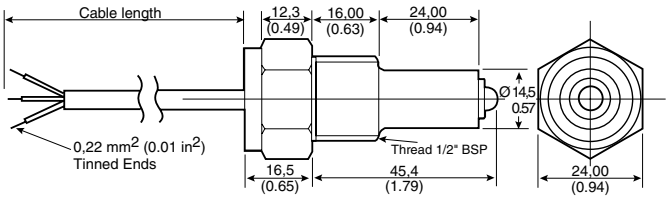

Screw-in, 0.5 in, metal

	REFERENCE
Nickel-plated brass	LLE205000
Stainless steel	LLE305000

LLN Series Industrial Liquid Level Sensors

The LLN Series industrial liquid level sensors are designed for many harsh industrial environments with extremes in temperature, pressure, vibration and shock. The LLN Series has reverse polarity and overvoltage protection. Housed in stainless-steel, the LLN Series has long life and is easy to clean. The LLN Series terminates using industry standard quick-connect connectors.

Wiring diagram

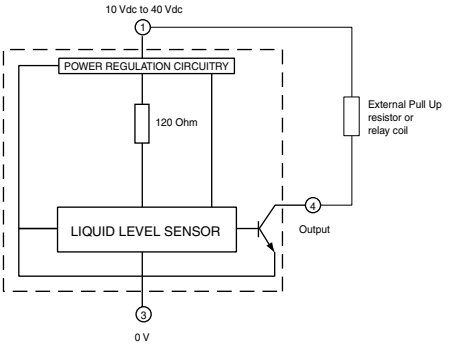

Housing material:	Stainless steel
Sealing:	IP67
Termination:	3 pin Lumberg/Brad Harrison type connector
Supply voltage:	10 Vdc to 40 Vdc
Pressure range:	0 bar to 25 bar
Operating temperature:	-40 °C to 125 °C [-40 °F to 257 °F]
Storage temperature:	-50 °C to 150 °C [-58 °F to 302 °F]

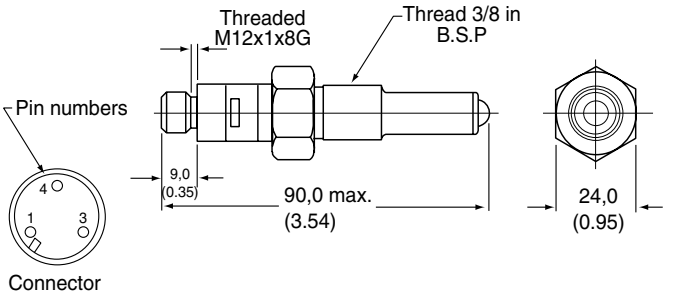

OUTPUT TYPE	REFERENCE
High in air	LLN8651721
Low in air	LLN8651722

Basic Switches

These listings include standard size basics, miniature and subminiature switches. The precision snap-action mechanisms are offered with a wide variety of actuators and operating characteristics. Basic switches are often ideal for applications requiring compactness, light weight, accurate repeatability and long life.

They are best used for presence/absence detection where physical contact with object is permissible. Very economical.

BZ/BA/BM/BE Series Basic Switches

BZ/BA/BM/BE Series standard basic switches are used for simple or precision on/off application needs.

As well as the catalogue listings presented here, we offer other versions with higher temperature ratings, different termination options, different electrical ratings and Single Pole, Single Throw (SPST) circuitry. Refer to our Web site for details.

Voltage:	250 Vac
Electrical rating:	up to 25 A
Operating temperature:	-55 °C to 85 °C [-67 ° F to 185 °F]
Termination:	Screw
Contact type:	Silver
Approvals:	CE, CSA, UL, ENEC
Switching options:	Single pole, double throw (SPDT)

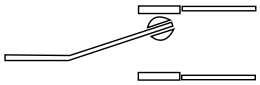

OPTIONS

Note: *BA/BE plunger position distance from mounting hole = 19 mm [0.75 in]*

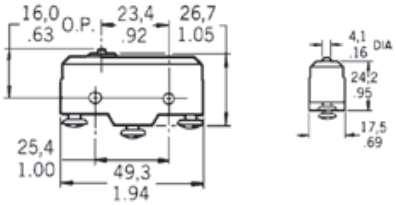

Top pin plunger

Approvals:	BE-2R-A4	CSA, UL
ELECTRICAL RATING	**TERMINATION**	**REFERENCE**
15 A	Solder	BZ-R
15 A	Screw	BZ-R-A2
15 A	Solder	BZ-R169
15 A	Screw	BZ-2R-A2
25 A	Screw	BE-2R-A4

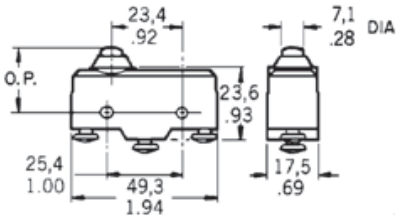

Overtravel plunger (standard)

ELECTRICAL RATING	**TERMINATION**	**REFERENCE**
15 A	Screw	BZ-2RD-A2
20 A	Screw	BA-2RB-A2

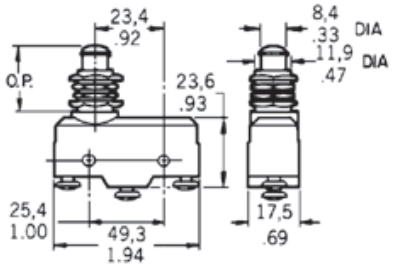

Panel mount overtravel plunger

ELECTRICAL RATING	**TERMINATION**	**REFERENCE**
15 A	Screw	BZ-2RQ1-A2
20 A	Screw	BA-2RQ1-A2

BZ/BA/BM/BE Series (continued)

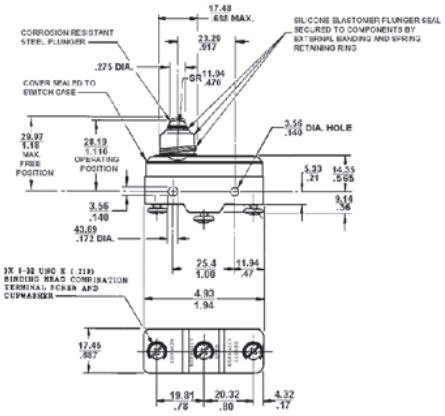

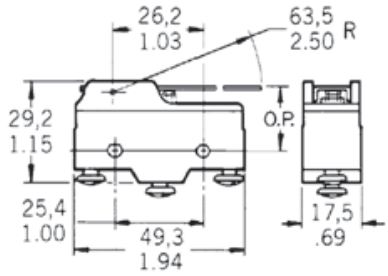

Overtravel plunger (splash resistant)

ELECTRICAL RATING	TERMINATION	REFERENCE
15 A	Screw	BZ-2RDS-A2
15 A (Stainless steel spring)	Screw	BZ-2RDS-A2S

Straight lever

ELECTRICAL RATING	TERMINATION	LEVER RADIUS	REFERENCE
20 A	Screw	63,5 mm [2.5 in]	BA-2RV-A2
15 A	Screw	63,5 mm [2.5 in]	BZ-2RW80-A2
15 A	Screw	152,4 mm [6.0 in]	BZ-2RW863-A2

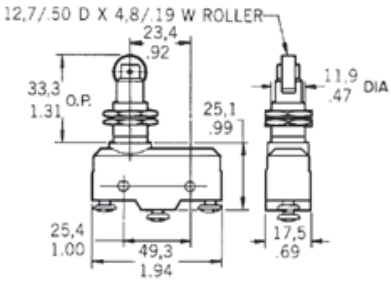

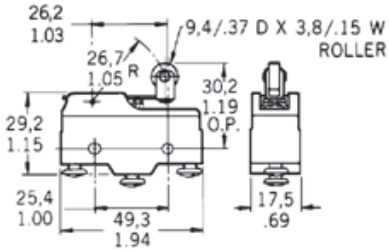

Overtravel roller plunger

ELECTRICAL RATING	TERMINATION	REFERENCE
15 A	Screw	BZ-2RQ18-A2

Roller lever

ELECTRICAL RATING	TERMINATION	LEVER RADIUS	REFERENCE
15 A	Screw	26,67 mm [1.05 in]	BZ-2RW822-A2
15 A	Solder	26,67 mm [1.05 in]	BZ-2RW822
15 A (Splash resistant)	Screw	26,67 mm [1.05 in]	BZ-2RW8225551-A2
15 A	Screw	One way, 32,0 mm [1.26 in]	BZ-2RW826-A2
15 A	Screw	48,3 mm [1.9 in]	BZ-2RW82-A2

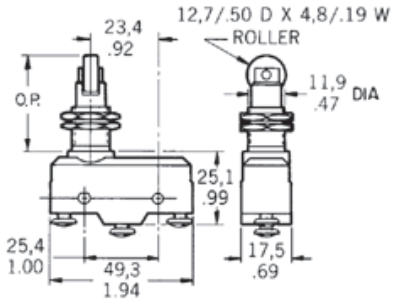

Overtravel roller plunger, perpendicular

ELECTRICAL RATING	APPROVALS	REFERENCE
15 A	Screw	BZ-2RQ181-A2

DT Series Basic Switches

DT Series standard basic switches consist of two independent single-pole double throw circuits in one housing actuated by one actuator. The terminals are separated by a non-conductive shield to reduce shorting.

Voltage: 250 Vac
Electrical rating: 10 A
Operating temperature: -55 °C to 85 °C [-67 ° F to 185 °F]
Termination: Screw
Contact type: Silver
Approvals: CSA, UL
Switching options: Double pole, double throw (DPDT)

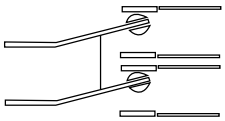

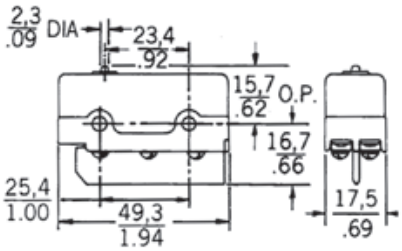

Top pin plunger

ELECTRICAL RATING	TERMINATION	REFERENCE
10 A	Screw	DT-2R-A7

Basic Switch Accessories

A range of accessories is available for BZ, BA, BM, BE and DT switches, such as the 5PA2 terminal enclosure. For more information please contact your local sales office.

TB Series Miniature Double-break Basic Switches

TB Series miniature double-break basic switches are basic double-break units that offer a means of controlling isolated circuits. Each circuit may be driven by an independent voltage source.

Voltage: 250 Vac
Electrical rating: 10 A
Operating temperature: -55 °C to 125 °C [-67 ° F to 257 °F]
Termination: Solder
Contact type: Silver
Approvals: CSA, UL
Switching options: Single pole, double throw, double break (SPDT DB)

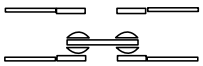

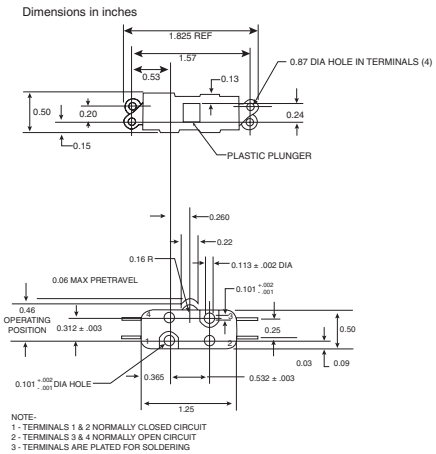

Top pin plunger

ELECTRICAL RATING	TERMINATION	REFERENCE
10 A	Solder	1TB1-2

SM and SX Series Subminiature Basic Switches

SM and SX Series subminiature basic switches are used for simple or precision on/off application needs. These switches combine small size and light weight with ample electrical capacity, precision operation and long life. The SX Series are small, precision, snap-action switches that are often ideal where savings in space and weight are important.

Voltage: 250 Vac
Operating temperature: -55 °C to 125 °C [-67 ° F to 257 °F]
Termination: Solder
Contact type: Silver
Switching options: Single pole, double throw (SPDT)

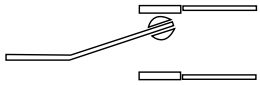

SM Series

Approvals: CE, CSA, UL
Electrical rating: 5 A

OPTIONS

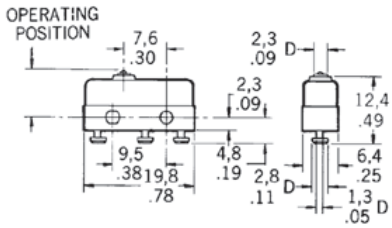

Top pin plunger

Approvals: 11SM601-H4 UL, CSA

TERMINATION	ELECTRICAL RATING	CONTACT TYPE	REFERENCE
	5 A	silver	11SM1
Solder/quick connect	5 A	silver	11SM601-H4

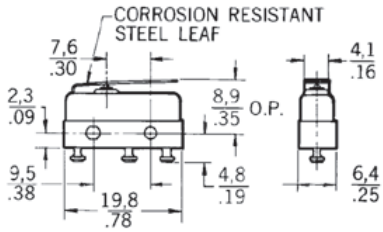

Straight lever

LEVER LENGTH	ELECTRICAL RATING	CONTACT TYPE	REFERENCE
4,83 mm	5 A	silver	111SM1

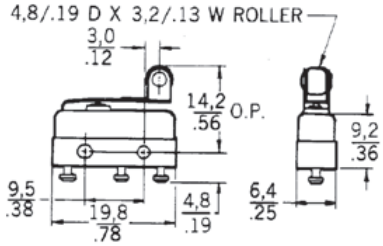

Roller lever

TERMINATION	ELECTRICAL RATING	CONTACT TYPE	REFERENCE
Solder/quick connect	5 A	silver	111SM2-T

SX Series

Approvals: CE, CSA, UL
Electrical rating: 5 A

OPTIONS

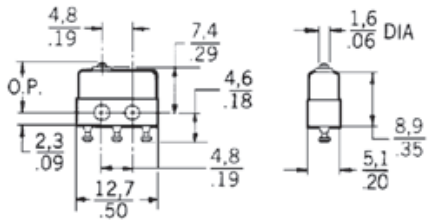

Top pin plunger

Approvals: 6SX7-T UL, CSA

CONTACTS	ELECTRICAL RATING	REFERENCE
Silver	7 A	1SX1-T
Silver	3 A	11SX1-T
Gold	1 A	6SX7-T

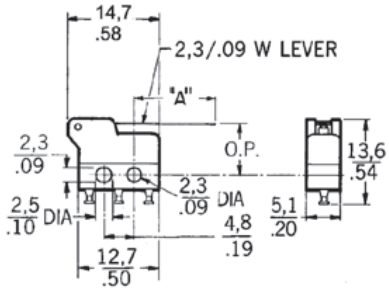

Straight lever

CONTACT TYPE	ELECTRICAL RATING	LEVER LENGTH	REFERENCE
Silver	5 A	'A' 12,8 mm	311SX2-T
Silver	5 A	'A' 24,5 mm	311SX3-T

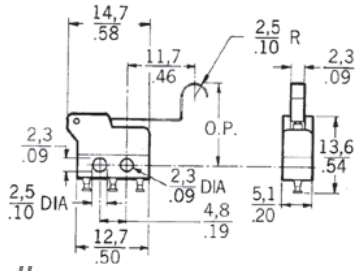

Simulated roller

CONTACT TYPE	ELECTRICAL RATING	LEVER	REFERENCE
Silver	5 A	Roller	311SX5-T

ZM, ZX, ZV and ZW Series Subminiature Basic Switches

ZM, ZX, ZV and ZW Series subminiature basic switches are cost-effective devices used for simple on/off applications. These switches combine small size and light weight with ample electrical capability and long life. Plastic lever capability is available on the ZV Series.

Electrical rating: 0.1 A, 3 A, 5 A or 10.1 A
Voltage: 125/250 Vac
Operating temperature: 25 °C to 85 °C [-13 °F to 185 °F]
Termination: Quick connect, solder, PCB
Contact type: Gold or silver
Switching options: SPDT

ZM Series

Approvals: UL/CSA
Electrical rating: 0.1 A, 5 A or 10.1 A

OPTIONS

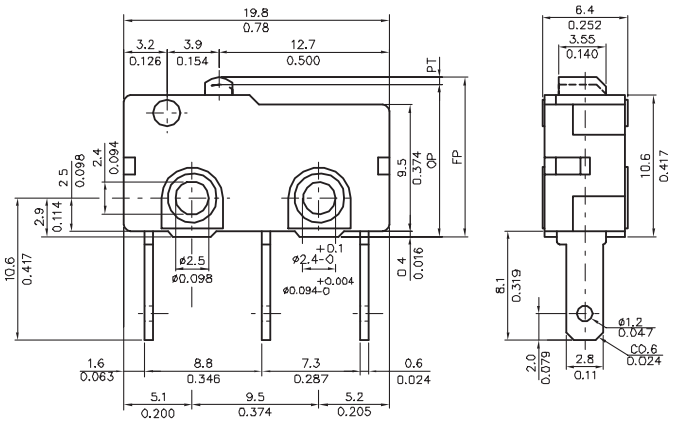

Top pin plunger

TERMINATION	ELECTRICAL RATING	CONTACT TYPE	REFERENCE
Quick connect	5 A	silver	ZM50E70A01
Solder	5 A	silver	ZM50E10A01
PCB	10.1 A	silver	ZM90G20A01
Solder	0.1 A	gold	ZM10B10A01

ZX Series

Approvals: UL/CSA
Electrical rating: 0.1 A or 3 A

OPTIONS

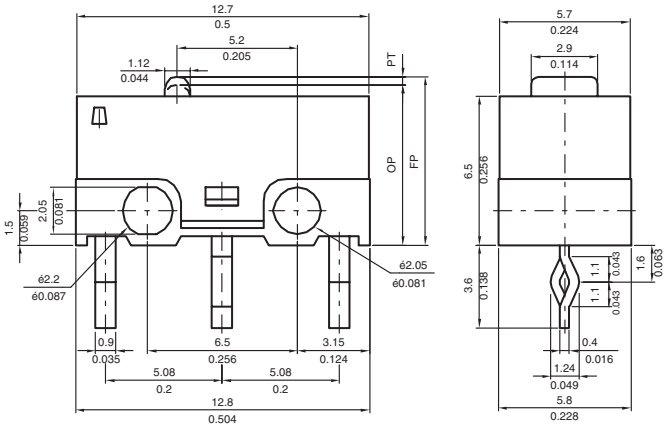

Top pin plunger

TERMINATION	ELECTRICAL RATING	CONTACT TYPE	REFERENCE
PCB	3 A	silver	ZX40E30A01
Solder	0.1 A	gold	ZX10C10A01

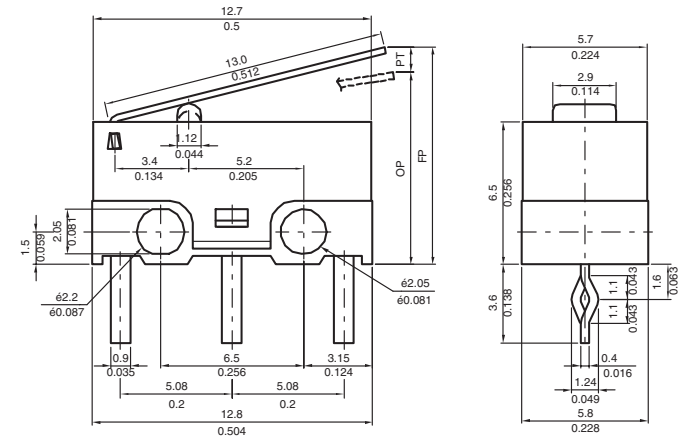

Straight lever

TERMINATION	ELECTRICAL RATING	CONTACT TYPE	REFERENCE
PCB	3 A	silver	ZX40E30C01
Solder	3 A	silver	ZX40E10C01

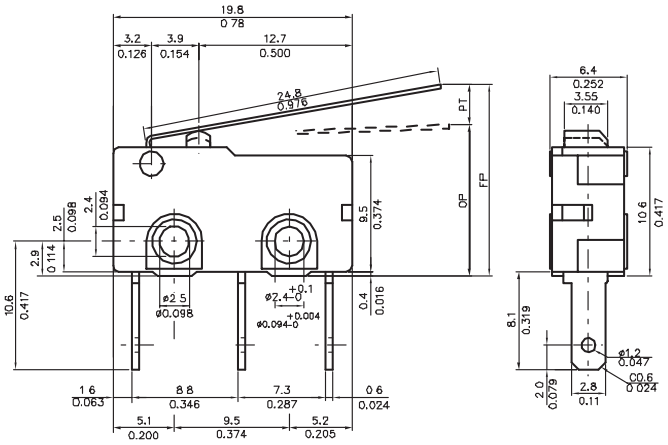

Straight lever

TERMINATION	ELECTRICAL RATING	CONTACT TYPE	REFERENCE
Quick connect	5 A	silver	ZM50E70D01
Solder	5 A	silver	ZM50E10D01

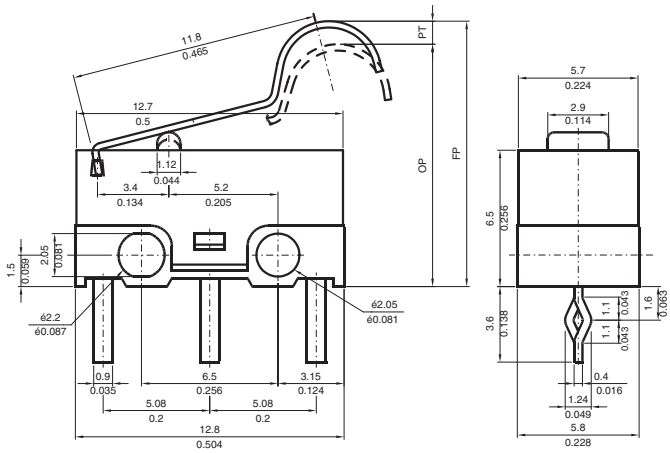

Simulated roller lever

TERMINATION	ELECTRICAL RATING	CONTACT TYPE	REFERENCE
PCB	3 A	silver	ZX40E30E01
Solder	3 A	silver	ZX40E10E01

ZV Series

Approvals: UL/ENEC
Electrical rating: 0.1 A, 5 A or 10.1 A

OPTIONS

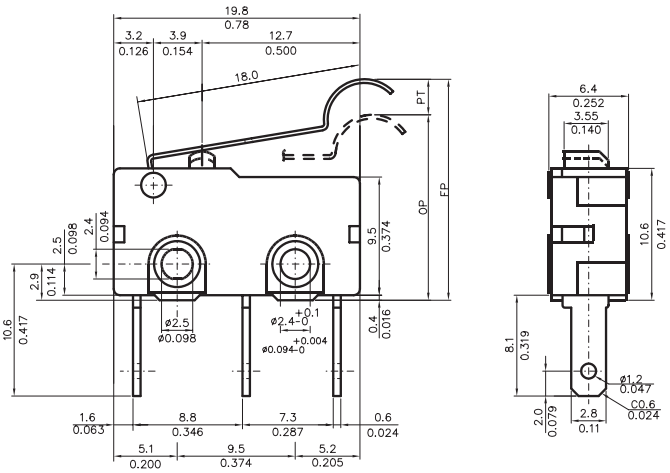

Simulated roller lever

TERMINATION	ELECTRICAL RATING	CONTACT TYPE	REFERENCE
Quick connect	5 A	silver	ZM50E70E01
Solder	5 A	silver	ZM50E10E01

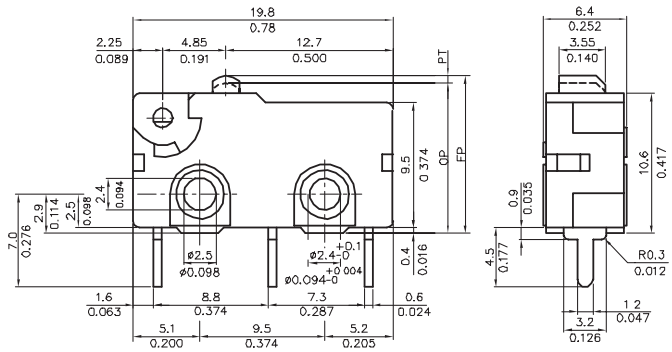

Top pin plunger

TERMINATION	ELECTRICAL RATING	CONTACT TYPE	REFERENCE
PCB	5 A	silver	ZV50E20A01
Solder	5 A	silver	ZV50E10A01
Quick connect	0.1 A	gold	ZV10B70A01

ZW Sealed Series

Approvals: UL/ENEC
Electrical rating: 0.1 A or 5 A
Sealing: IP50 and IP67

OPTIONS

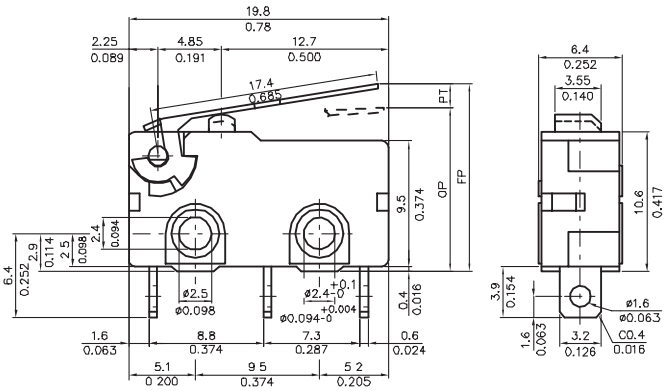

Straight lever

TERMINATION	ELECTRICAL RATING	CONTACT TYPE	REFERENCE
Solder	5 A	silver	ZV50E10B01
Quick connect	5 A	silver	ZV50E70C01

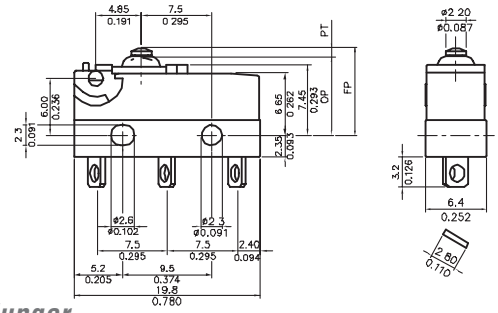

Top pin plunger

TERMINATION	ELECTRICAL RATING	CONTACT TYPE	REFERENCE
Solder	5 A	silver	ZW50F15AD1

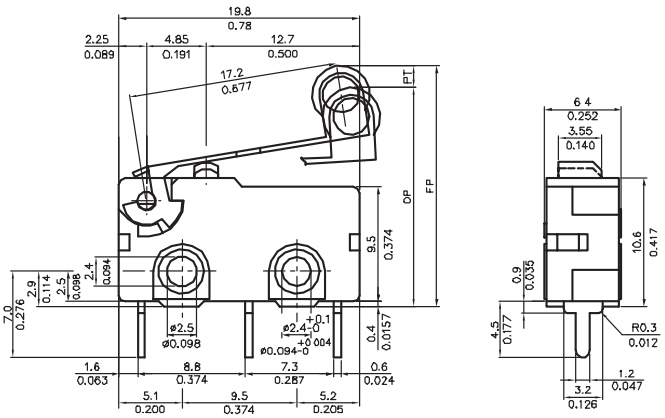

Roller lever

TERMINATION	ELECTRICAL RATING	CONTACT TYPE	REFERENCE
PCB	5 A	silver	ZV50E20F01
Quick connect	5 A	silver	ZV50E70F01

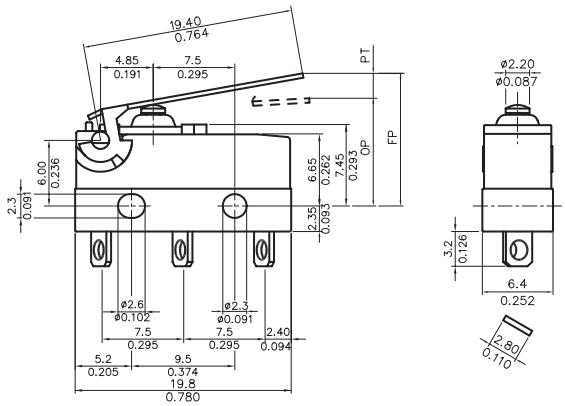

Straight lever

TERMINATION	ELECTRICAL RATING	CONTACT TYPE	REFERENCE
Solder	0.1 A	gold	ZW10E15CD1

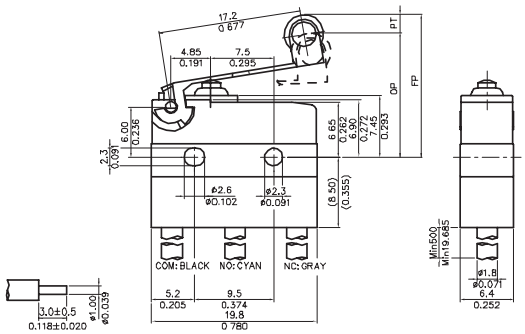

Roller lever

TERMINATION	ELECTRICAL RATING	CONTACT TYPE	REFERENCE
Wire leads	0.1 A	gold	ZW10E90FW1

V5 Series Miniature Basic Switches

V5 Series basic switches are used for simple or precision on/off, end of limit, presence/absence, pressure, temperature and manual operator interface application needs.

Voltage: 250 Vac
Operating temperature:
-55 °C to 85 °C [-67 °F to 185 °F] (standard)
-55 °C to 150 °C [-67 °F to 302 °F] (high temperature)
Termination: 6,3 mm x 0,8 mm quick connect (QC)
Contact type: Silver/silver cadmium oxide
Electrical rating: 20 A (V5A)
16 A (V5B/P/R)
10 A (V5C/D)
22 A (V5S)
Switching options: SPDT
Single pole double throw (SPDT)
Single pole single throw (SPST) (NO and NC)

OPTIONS

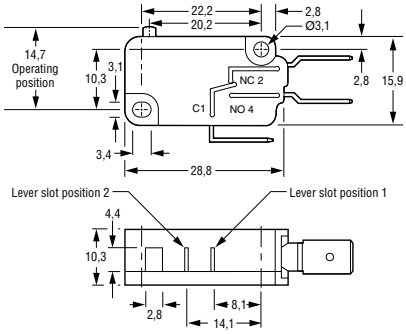

Top pin plunger

APPROVALS		REFERENCE
CE, ENEC		V5A010CB
CE, CSA, ENEC, UL		V5B010CB3
CE, CSA, UL	4,8 mm x 0,5 mm QC	V5B010FB3
CE, ENEC	Solder terminals	V5B010TB
CE, ENEC	High temperature	V5B210CB
CE, ENEC		V5C010BB
CE, CSA, ENEC, UL	4,8 mm x 0,5 mm QC	V5C010EB3
CE, CSA, ENEC, UL	Solder terminals	V5C010TB3
CE, ENEC		V5P010CB

APPROVALS	SWITCHING OPTIONS	REFERENCE
CE, ENEC	SPNO	V5D030BB
CE, ENEC	SPNO	V5R030CB
CE, BEAB	SPNC	V5S020CB
CE, BEAB	SPNO	V5S030CB

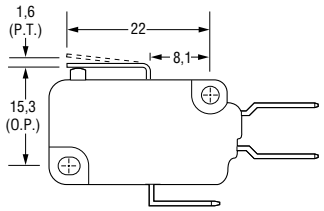

Straight lever - Type B

APPROVALS	REFERENCE
CE, CSA, ENEC, UL	V5C010BB3B

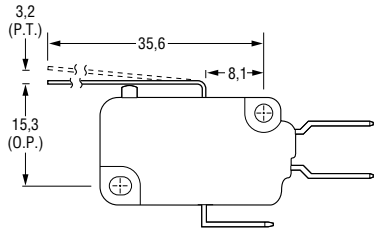

Type C

APPROVALS		REFERENCE
CE, ENEC	High temperature	V5B210CB1C

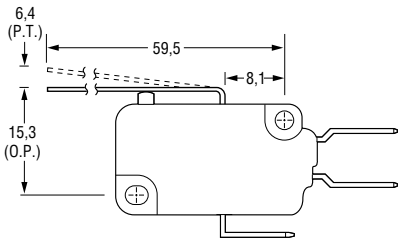

Type G

APPROVALS	REFERENCE
CE, ENEC	V5C010BB1G

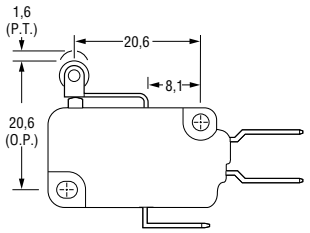

Roller lever - Type D

APPROVALS		REFERENCE
CE, CSA, ENEC, UL	High temperature	V5B210CB3D
CE, CSA, ENEC, UL		V5C010BB3D

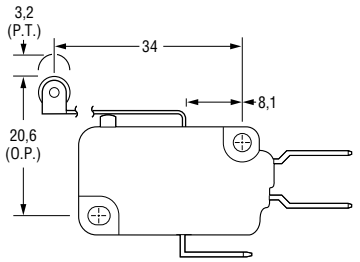

Type E

APPROVALS		REFERENCE
CE, CSA, ENEC, UL	Lever position 2	V5A010CB4E
CE, ENEC	High temperature	V5B210CB1E

V7 Series Miniature Basic Switches

V7 Series basic switches are used for simple or precision on/off, end of limit, presence/absence, pressure, temperature and manual operator interface application needs.

Operating temperature:
-40 °C to 82 °C [-40 °F to 180 °F] (standard)
-40 °C to 200 °C [-40 °F to 350 °F] (high temperature)

Termination: Printed circuit board (PCB) and two types of quick connect (QC)
D8, E8: 4,8 mm x 0.5 mm [0.187 in x 0.02 in]
E9: 6,35 mm x 0,80 mm [0.25 in x 0.032 in]

	Electrical rating	Contact Type
V7-*A	5 A	Silver
V7-*B	11 A	Silver
V7-*C/W	15 A	Silver
V7-*D	1 A	Gold alloy
V7-*E	10 A	Silver
V7-*S	100 mA	Gold alloy
V7-*V	21 A	Silver alloy
V7-*Z	25 A	Silver cadmium oxide

Approvals: CSA, UL, ENEC
V7-*C/W (Electrical ratings) CSA, UL

Switching options: Single pole double throw (NO and NC) (SPDT)

AVAILABLE TERMINALS

Quick Connect (QC)

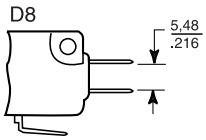

0.187 in wide x 0.020 in thick. D8 terminals are European approved when used with electrical ratings A, B, D, E or S. International approval agencies require that switches with these terminals have insulated receptacles or connector.

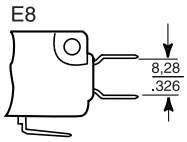

0.187 in wide x 0.020 in thick. E8 terminals are European approved when used with electrical ratings A, B, D, E or S.

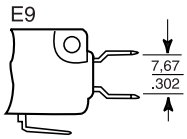

0.250 in wide x 0.032 in thick. E9 terminals are European approved when used with electrical ratings A, B, D, E, S, V or Z.

Printed circuit board (PO2)

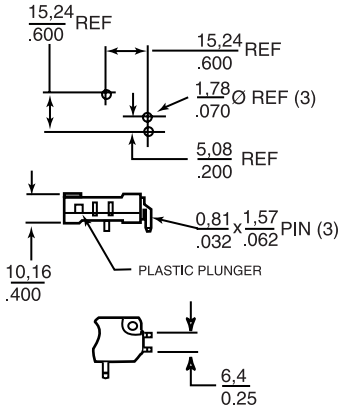

These terminals interface with snap-on receptacles and other components from AMPMODU interconnection system.

PCB terminals are European approved when used with electrical ratings A, B, D, E, S.

ACTUATION OPTIONS

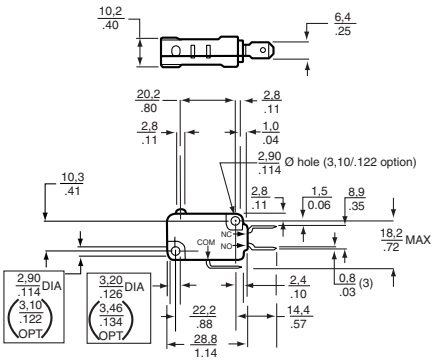

Note: *The optional mounting hole dimensions shown above are standard on V5/V7 International Series switches.*

Top pin plunger

CURRENT	TERMINATION	REFERENCE
5 A	QC (D8)	V7-1A17D8
5 A	PCB	V7-1A17P02
11 A	QC (D8)	V7-1B17D8
11 A	QC (E9)	V7-1B19E9
15 A	QC (D8)	V7-1C17D8
15 A	QC (E9)	V7-1C17E9
1 A	QC (D8)	V7-1D10D8
0.1 A	QC (D8)	V7-1S17D8
21 A	QC (E9)	V7-1V19E9
25 A	QC (E9)	V7-1Z19E9

V7 Series Miniature Basic Switches (continued)

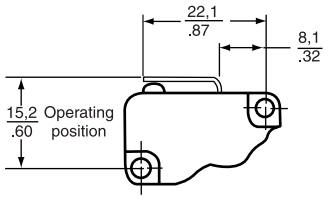

Straight lever

Type -002

ELECTRICAL RATING	TERMINATION	REFERENCE
15 A	QC (D8)	V7-1C17D8-002
15 A	QC (E9)	V7-1C17E9-002
11 A	QC (E9)	V7-2B17E9-002

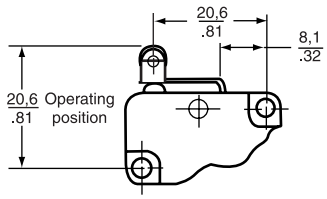

Roller lever

Type -201

ELECTRICAL RATING	TERMINATION	REFERENCE
15 A	QC (D8)	V7-1C17D8-201
15 A	QC (E9)	V7-1C17E9-201
0.1 A	QC (D8)	V7-1S17D8-201
11 A	QC (D8)	V7-2B17D8-201

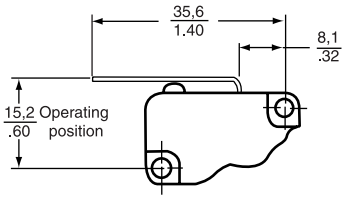

Straight lever

Type -022

ELECTRICAL RATING	TERMINATION	REFERENCE
5 A	QC (D8)	V7-1A17D8-022
11 A	QC (D8)	V7-1B19D8-022
15 A	QC (D8)	V7-1C17D8-022
0.1 A	QC (D8)	V7-1S17D8-022

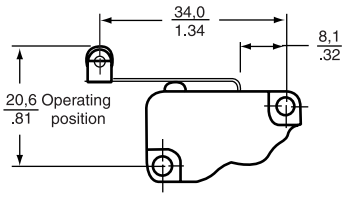

Type -207

ELECTRICAL RATING	TERMINATION	REFERENCE
11 A	QC (E9)	V7-1B10E9-207
15 A	QC (D8)	V7-1C17D8-207
15 A	QC (E9)	V7-1C17E9-207
0.1 A	QC (D8)	V7-1S17D8-207
21 A	QC (E9)	V7-1V1939-207
5 A	QC (D8)	V7-2A17D8-207
1 A	QC (D8)	V7-7D17D8-207

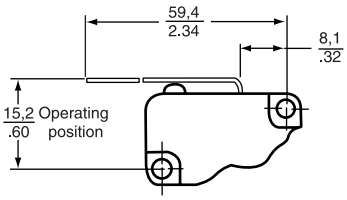

Type -048

ELECTRICAL RATING	TERMINATION	REFERENCE
11 A	QC(D8)	V7-1B17D8-048
15 A	QC(D8)	V7-1C17D8-048
21 A	QC(E9)	V7-1V19E9-048
11 A	QC(E9)	V7-2B19E9-048
0.1 A	QC(D8)	V7-3S17D8-048
15 A (High temperature)	QC(E9)	V7-9W1AE9-048

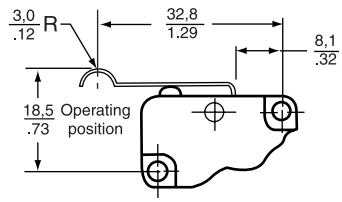

Simulated roller lever

Type -263

ELECTRICAL RATING	TERMINATION	REFERENCE
11 A	QC (D8)	V7-1B17D8-263
15 A	QC (D8)	V7-1C17D8-263
0.1 A	QC (D8)	V7-1S17D8-263
0.1 A	QC (E9)	V7-3S17E9-263

Turbidity Sensors

Turbidity sensing provides a quick, practical indication of the relative amount of solids suspended in water or liquids. Conductivity sensing gives a relative measurement of the ionic concentration of a given liquid.

Turbidity sensors can provide inputs to the control algorithms of dishwashers and clothes washers. Many industrial and commercial bath applications may make use of integrated turbidity and conductivity sensing to improve product quality, minimize ingredient consumptions and reduce waste water discharge.

Package style:	Tank mount
Operating temperature:	20 °C to 60 °C [68 °F to 140 °F]

APMS-10 Series

The APMS-10 wash process sensor application kit includes the sensor, PC interface and the software required to apply the Honeywell wash process sensor in bath or other wet applications. Once installed, the kit enables the user to begin taking measurements of water quality. To run the wash process application, the user must supply a PC that meets the specified hardware requirements and an 8 Vdc to 30 Vdc power supply. Wash process sensors provide an integrated package of a microprocessor and sensing functions that measures turbidity, conductivity and/or temperature. Information from the sensor may be used in an adaptive control scheme to monitor and control the application process to help improve process quality and minimize consumption of energy, water, materials and time. Each of the sensing functions is conditioned by the internal microprocessor. All data transmitted to the host system is supplied by the microprocessor via a 5 Vdc custom communications protocol. The sensor operates in slave mode, waiting for the host system to request sensor information.

Supply voltage:	8 Vdc to 30 Vdc
Ratio range:	0 NTU to 4000 NTU
Output type:	RS-232 Serial link, slave mode

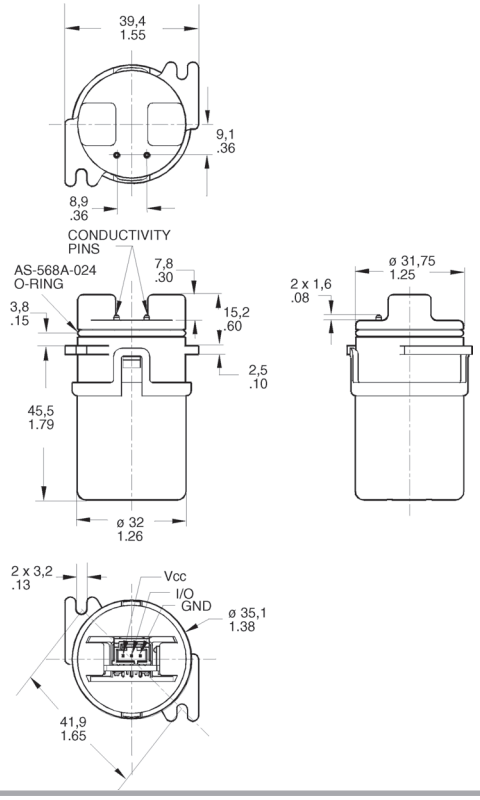

APMS-10 Kit specifications

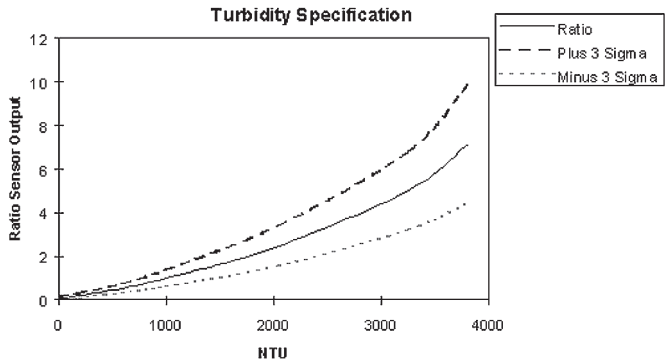

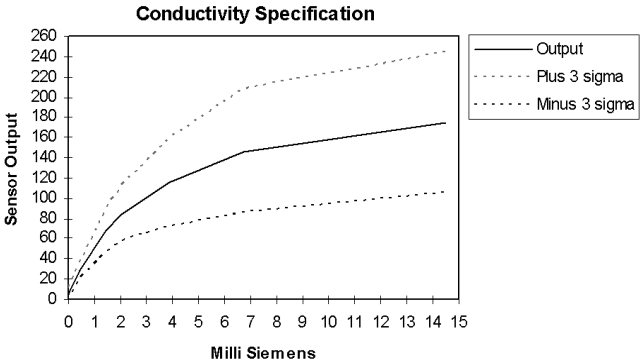

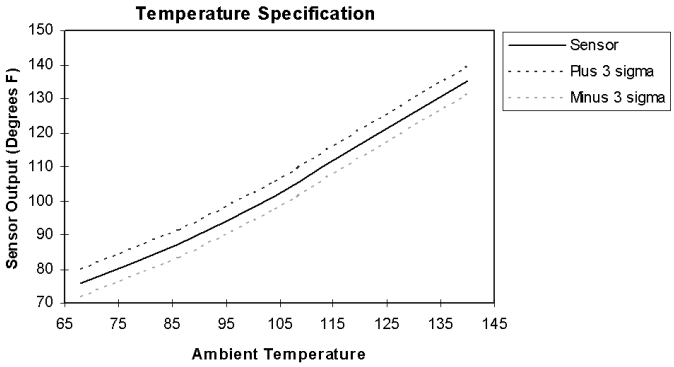

REFERENCE
APMS-10GRCF-KIT

APMS-11 Series

The Low NTU turbidity sensor application kit includes the sensor and installation instructions to apply the sensor in a bath or other wet applications. Once installed, the sensor enables the user to measure the relative amount of particulate in solution. To run the application, the user must supply a 5 Vdc power supply that meets the specified tolerance and solicits analog output from the output pin of the device. Low NTU turbidity sensors provide an integrated package of optic devices, amplification and trim potentiometer capability. This sensor may be used in an adaptive control scheme to monitor and control the wash process to help improve process quality and minimize consumption of energy, water, materials and time.

Supply voltage:	4.9 Vdc to 5.1 Vdc
Ratio range:	0 NTU to 600 NTU
Output type:	0 Vdc to 5 Vdc analog

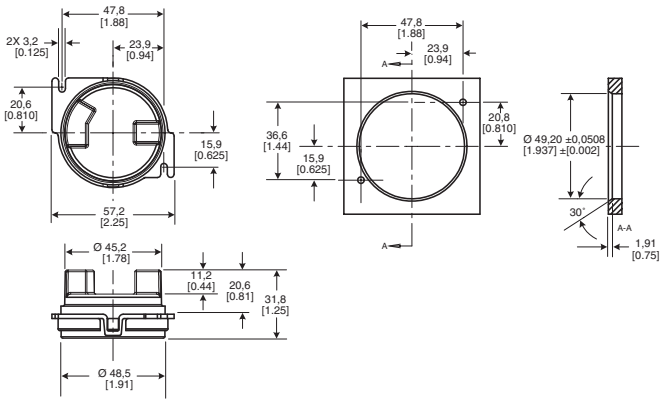

REFERENCE
APMS-11GRCF-KIT

APMS-11 Kit - Typical output curve between 0 NTU and 600 NTU

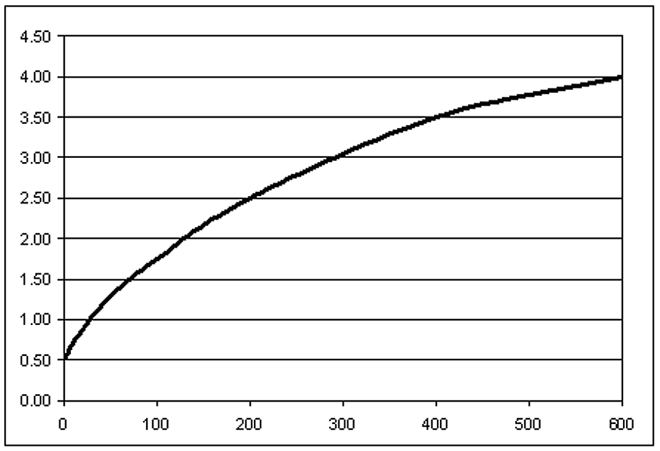

Scatter turbidity sensor operation

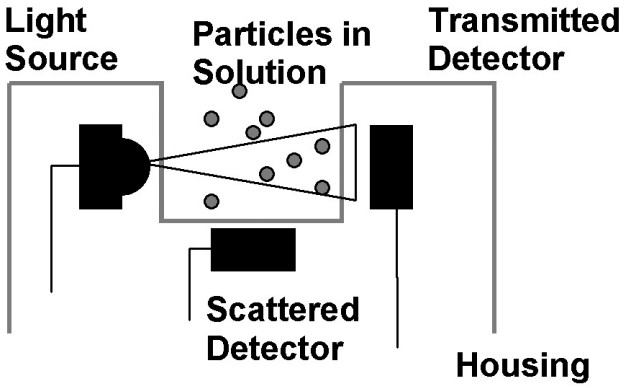

Typical output curve between 0 NTU and 200 NTU

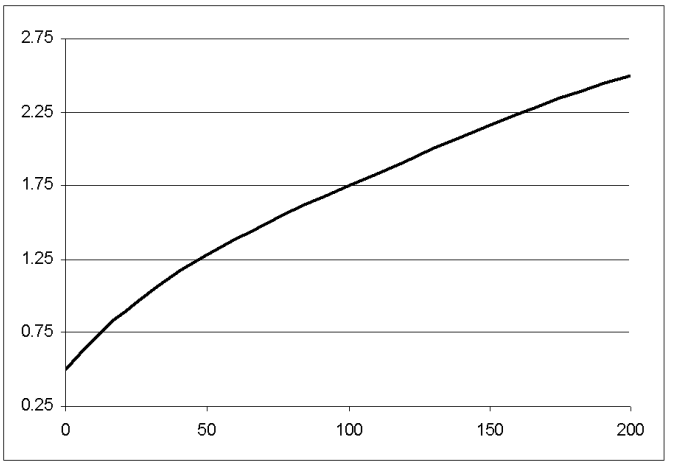

Index

103SR13A-1 72
103SR14A-1 72
103SR17A-1 72
103SR18A-1 72
103SR19A-1 72
111-103EAJ-H01 25
111-104HAK-H01 25
111-202CAK-B01 25
111-202CAK-H01 25
111-303EAK-B01 25
111-802EAJ-B01 25
111-802EAJ-H01 25
111SM1 92
111SM2-T 92
112-102EAJ-B01 24
112-103FAJ-B01 24
112-103FAJ-H01 24
112-104KAJ-B01 24
112-104KAJ-H01 24
112-105PAJ-B01 24
112-201BAJ-B01 24
112-202EAJ-B01 24
112-202EAJ-H01 24
112-203HAJ-B01 24
112-204KAJ-B01 24
112-502EAJ-B01 24
112-502EAJ-H01 24
112-503JAJ-B01 24
112-504NAJ-B01 24
112-604NAJ-H01 24
115-202CDK-801 26
115-802EDJ-801 26
11SM1 92
11SM601-H4 92
11SX1-T 92
120-102EAJ-Q01 25
120-103FAJ-Q01 25
120-104KAJ-Q01 25
120-202EAJ-Q01 25
120-502JAJ-Q01 25
121-102EAJ-Q01 25
121-103FAJ-Q01 25
121-104KAJ-Q01 25
121-105PAJ-Q01 25
121-106QAJ-Q01 25
121-202EAJ-Q01 25
121-202KAJ-Q01 25
121-502EAJ-Q01 25
121-502JAJ-Q01 25
121-504NAJ-Q01 25
135-102DAG-J01 21
135-103FAF-J01 21
135-103FAG-J01 21
135-103LAF-J01 21
135-103LFW-J01 21
135-104LAF-J01 21
135-104LAG-J01 21
135-104LFW-J01 21
135-105QAG-J01 21
135-202FAG-J01 21
135-203LAG-J01 21
135-203LFW-J01 21
135-204QAG-J01 21
135-302FAG-J01 21
135-303KAG-J01 21
135-303LFW-J01 21
135-502FAF-J01 21
135-502FAG-J01 21
135-503LAF-J01 21
135-503LAG-J01 21
135-503LFW-J01 21
135-504QAG-J01 21
140-102FAG-RB1 23
140-103LAG-RB1 23
140-104QAG-RB1 23
140-302LAG-RB1 23
140-501FAG-RB1 23
140-502LAG-RB1 23
140-503QAG-RB1 23
141PC15G 10 11
142-102FAG-RB1 24
142-103LAG-RB1 24
142-104QAG-RB1 24
142-302LAG-RB1 24
142-501FAG-RB1 24
142-502LAG-RB1 24
142-503QAG-RB1 24
142PC01D 10
142PC01G 10
142PC02G 10
142PC05D 10
142PC05D97 10
142PC05G 10
142PC15A 10
142PC15AW95 10
142PC15G 10
143-101FAG-RC1 23
143-102LAG-RC1 23
143-103QAG-RC1 23
143-201FAG-RC1 23
143-302LAG-RC1 23
143-303QAG-RC1 23
143-501FAG-RC1 23
143-502LAG-RC1 23
143-503QAG-RC1 23
143PC03D 10
143PC05DW 10
145-101FAG-RC1 24
145-102LAG-RC1 24
145-103QAG-RC1 24
145-201FAG-RC1 24
145-301FAG-RC1 24
145-302LAG-RC1 24
145-303QAG-RC1 24
145-501FAG-RC1 24
145-502LAG-RC1 24
145-503QAG-RC1 24
162PC01D 10
163PC01D36 10
163PC01D48 10
163PC01D61 10
163PC01D75 10
164PC01D37 10
164PC01D76 10
1865-01G-K-N 17
1865-01G-L-N 17
1865-02G-K-N 17
1865-02G-L-N 17
1865-03G-K-N 17
1865-03G-L-N 17
1865-04G-K-N 17
1865-04G-L-N 17
1865-05G-K-N 17
1865-05G-L-N 17
192-102DET-A01 23
192-102DEV-A01 23
192-102DEW-A01 23
192-103LET-A01 23
192-103LEV-A01 23
192-103LEW-A01 23
192-104QET-A01 23
192-104QEV-A01 23
192-104QEW-A01 23
192-222LET-A01 23
192-222LEV-A01 23
192-222LEW-A01 23
192-302LET-A01 23
192-302LEV-A01 23
192-302LEW-A01 23
192-303KET-A01 23

192-303KEV-A01 23
192-303KEW-A01 23
192-303QET-A01 23
192-303QEV-A01 23
192-303QEW-A01 23
192-502LET-A01 23
192-502LEV-A01 23
192-502LEW-A01 23
192-503QET-A01 23
192-503QEV-A01 23
192-503QEW-A01 23
195-101CAG-A01 22
195-102DAG-A01 22
195-103LAG-A01 22
195-104QAG-A01 22
195-202LAG-A01 22
195-203LAG-A01 22
195-301CAG-A01 22
195-302LAG-A01 22
195-303KAG-A01 22
195-501DAG-A01 22
195-502LAG-A01 22
195-503QAG-A01 22
197-101CAG-A01 22
197-102DAG-A01 22
197-103LAG-A01 22
197-104QAG-A01 22
197-202LAG-A01 22
197-203LAG-A01 22
197-301CAG-A01 22
197-302LAG-A01 22
197-303KAG-A01 22
197-501DAG-A01 22
197-502LAG-A01 22
197-503QAG-A01 22
198-101CAG-A01 22
198-102DAG-A01 22
198-103LAG-A01 22
198-104QAG-A01 22
198-202LAG-A01 22
198-203LAG-A01 22
198-301CAG-A01 22
198-302LAG-A01 22
198-303KAG-A01 22
198-501DAG-A01 22
198-502LAG-A01 22
198-503QAG-A01 22
199-101CAG-A01 22
199-102DAG-A01 22
199-103LAG-A01 22
199-104QAG-A01 22
199-202LAG-A01 22
199-203LAG-A01 22
199-301CAG-A01 22
199-302LAG-A01 22
199-303KAG-A01 22
199-501DAG-A01 22
199-502LAG-A01 22
199-503QAG-A01 22
1SX1-T 92
1TB1-2 91
24PC01SMT 5
24PC05SMT 5
24PC15SMT 5
24PCAFA6G 4
24PCBFA6D 4
24PCBFA6G 4
24PCCFA6D 4
24PCCFA6G 4
24PCCFG6G 4
24PCDFA6D 4
24PCDFA6G 4
24PCDFG6G 4
24PCEFA6D 4
24PCEFA6G 4
24PCFFA6D 4
24PCFFA6G 4
26PC01SMT 5
26PC15SMT 5
26PCAFA6D 4
26PCAFA6G 4
26PCAFG6G 4
26PCBFA6D 4
26PCBFA6G 4
26PCCFA6D 4
26PCCFA6G 4
26PCCFG6G 4
26PCDFA6D 4
26PCDFA6G 4
26PCDFG2G 5
26PCFFA6G 4
26PCFFG6G 4
26PCFFU5G 5
26PCGFA6D 4
2SS52M 71
2SS52M-S 71
3100U-3-1431 33
3100U-3-1432 33
3100U-3-1433 33
3100U-3-1434 33
3100U-3-1435 33
3100U-3-1436 33
3100U-3-1437 33
3100U-3-1438 33
3100U-3-1439 33
3100U-3-1440 33
3100U-3-1441 33
3100U-3-1442 33
3100U-3-1443 33
3100U-3-1444 33
3100U-3-1445 33
3100U-3-1446 33
3100U-3-1447 33
3100U-3-1448 33
3100U-3-1449 33
3100U-3-1450 33
3100U-3-1451 33
3100U-3-1452 33
3100U-3-1453 33
3100U-3-1454 33
3100U-3-1455 33
3100U-3-1456 33
3100U-3-1457 33
3100U-3-1458 33
3100U-3-1459 33
3100U-3-1460 33
3100U-3-1461 33
3100U-3-1462 33
3100U-3-1463 33
3455RC-100-220 32
3455RC-100-221 32
3455RC-100-222 32
3455RC-100-223 32
3455RC-100-224 32
3455RC-100-225 32
3455RC-100-226 32
3455RC-100-227 32
3455RC-100-228 32
3455RC-100-229 32
3455RC-100-230 32
3455RC-100-231 32
3455RC-100-232 32
3455RC-100-233 32
3455RC-100-234 32
3455RC-100-235 32
3455RC-100-236 32
3455RC-100-237 32
3455RC-100-238 32
3455RC-100-239 32
3455RC-100-240 32
3455RC-100-241 32
3455RC-100-242 32
3455RC-100-243 32
3455RC-100-244 32
3455RC-100-245 32
3455RC-100-246 32

3455RC-100-247 32
3455RC-100-248 32
3455RC-100-249 32
3455RC-100-250 32
3455RC-100-251 32
3600040010001 33
3600045010001 33
3600050010001 33
3600055010001 33
3600060010001 33
3600065010001 33
3600070010001 33
3600075010001 33
3600080010001 33
3600085010001 33
3600090010001 33
3600095010001 33
3600100010001 33
3601040010001 33
3601045010001 33
3601050010001 33
3601055010001 33
3601060010001 33
3601065010001 33
3601070010001 33
3601075010001 33
3601080010001 33
3601085010001 33
3601090010001 33
3601095010001 33
3601100010001 33
40PC001B1A 11
40PC006G1A 11
40PC015G1A 11
40PC015V1A 11
40PC030G1A 11
40PC100G1A 11
40PC150G1A 11
40PC250G1A 11
40PC500G1A 11
513SS16 71
517SS16 71
55SS13 71
613SS2 71
65SS4 71
6SX7-T 92
APMS-10GRCF-KIT 99
APMS-11GRCF-KIT 100
ASDX001D44D-DO 8
ASDX001D44R 8
ASDX001G24R 8
ASDX005D44R 8
ASDX005G24R 8
ASDX015A24R 8
ASDX015D44D-DO 8
ASDX015D44R 8
ASDX015D44R-DO 8
ASDX015G24R 8
ASDX030A24R 8
ASDX030D44R 8
ASDX030G24R 8
ASDX100A24R 8
ASDX100D44R 8
ASDX100G24R 8
ASDXL005D44D-DO 9
ASDXL010D44D 9
ASDXL010D44D-DO 9
ASDXL010D44R 9
ASDXL010D44R-DO 9
ASDXL010G24R 9
ASDXL010G25R-DO 9
AWM2100V 13
AWM2200V 13
AWM2300V 13
AWM3100V 13
AWM3200V 13
AWM3300V 13
AWM42150VH 14
AWM42300V 14
AWM43300V 14
AWM43600V 14
AWM5101VN 14
AWM5102VN 14
AWM5104VC 14
AWM5104VN 14
AWM720P1 15
AWM92100V 15
AWM92200V 15
BA-2RB-A2 89
BA-2RQ1-A2 89
BA-2RV-A2 90
BE-2R-A4 89
BZ-2R-A2 89
BZ-2RD-A2 89
BZ-2RDS-A2 90
BZ-2RDS-A2S 90
BZ-2RQ1-A2 89
BZ-2RQ18-A2 90
BZ-2RQ181-A2 90
BZ-2RW80-A2 90
BZ-2RW82-A2 90
BZ-2RW822 90
BZ-2RW822-A2 90
BZ-2RW8225551-A2 90
BZ-2RW826-A2 90
BZ-2RW84-A2 90
BZ-2RW863-A2 90
BZ-R 89
BZ-R-A2 89
BZ-R169 89
CPCL04DFC 6
CPCL04GFC 6
CPCL10DF 6
CPCL10DFC 6
CPXL04DF 6
CSDA1AA 86
CSDA1AC 86
CSDA1BA 86
CSDA1BC 86
CSDA1DA 86
CSDA1DC 86
CSDC1AA 86
CSDC1AC 86
CSDC1BA 86
CSDC1BC 86
CSDC1DA 86
CSDC1DC 86
CSLA1CD 85
CSLA1CF 85
CSLA1CH 85
CSLA1DE 84
CSLA1DJ 84
CSLA1DK 84
CSLA1EL 85
CSLA1GD 85
CSLA2CD 85
CSLA2DE 84
CSLA2DG 84
CSLA2DJ 84
CSLA2DK 84
CSLA2EJ 85
CSLA2EL 85
CSLA2EM 85
CSLA2EN 85
CSLA2GD 85
CSLH3A45 85
CSNA111 82
CSNB121 82
CSNB131 82
CSNC241 82
CSNE151 82
CSNE151-100 82
CSNE151-200 82
CSNF151 82
CSNF161 82
CSNF161-002 83

CSNG251 ... 82
CSNJ481 ... 83
CSNJ481-001 ... 83
CSNK500M ... 83
CSNK500M-001 ... 83
CSNK591 ... 84
CSNK591-001 ... 84
CSNP661 ... 82
CSNP661-002 ... 82
CSNR151 ... 82
CSNR151-002 ... 83
CSNR161 ... 82
CSNR161-002 ... 83
CSNS300F ... 83
CSNS300M ... 83
CSNS300M-001 ... 83
CSNT651 ... 82
CSNT651-001 ... 82
DC001NDC4 ... 6
DC005NDR4 ... 6
DCXL01DN ... 6
DCXL10DN ... 6
DT-2R-A7 ... 91
DUXL01D ... 6
DUXL10D ... 6
DXXX-001 ... 30
DXXX-002 ... 30
DXXX-003 ... 30
FS300-100 ... 64
FSG15N1A ... 16
Heaters
3100 Silicone Wired-wound ... 66
3200 Silicone Chemically Etched ... 66
3400 Kapton or High Temperature ... 67
78000 Transparent ... 67
HEL-700-T-0-A ... 19
HEL-700-T-0-B ... 19
HEL-700-T-1-A ... 19
HEL-700-T-1-B ... 19
HEL-700-U-0-A ... 19
HEL-700-U-0-B ... 19
HEL-700-U-0-C ... 19
HEL-700-U-1-A ... 19
HEL-700-U-1-B ... 19
HEL-700-U-1-C ... 19
HEL-705-T-0-12-00 ... 20
HEL-705-T-1-12-00 ... 20
HEL-705-U-0-12-00 ... 20
HEL-705-U-1-12-00 ... 20
HEL-707-T-0-12-00 ... 20
HEL-707-T-1-12-00 ... 20
HEL-707-U-0-12-00 ... 20
HEL-707-U-1-12-00 ... 20
HEL-711-T-0-12-00 ... 20
HEL-711-T-1-12-00 ... 20
HEL-711-U-0-12-00 ... 20
HEL-711-U-1-12-00 ... 20
HEL-712-T-0-12-00 ... 20
HEL-712-T-1-12-00 ... 20
HEL-712-U-0-12-00 ... 20
HEL-712-U-1-12-00 ... 20
HEL-716-T-0-12-00 ... 20
HEL-716-T-1-12-00 ... 20
HEL-716-U-0-12-00 ... 20
HEL-716-U-1-12-00 ... 20
HEL-716-U-1-12-C2 ... 20
HEL-717-T-0-12-00 ... 20
HEL-717-T-1-12-00 ... 20
HEL-717-U-0-12-00 ... 20
HEL-717-U-1-12-00 ... 20
HIH-3602-A ... 18
HIH-3602-C ... 18
HIH-3602-L ... 18
HIH-4000-001 ... 18
HIH-4000-002 ... 18
HIH-4000-003 ... 18
HIH-4000-004 ... 18
HLC1395-002 ... 77
HLC2705-001 ... 76
HLC2707-001 ... 76
HOA0149-001 ... 77
HOA0866-T55 ... 78
HOA0870-N51 ... 78
HOA0880-P51 ... 78
HOA0890-L55 ... 78
HOA0901-011 ... 76
HOA0902-011 ... 76
HOA0961-N51 ... 79
HOA0971-N51 ... 79
HOA1180-002 ... 77
HOA1397-002 ... 77
HOA1405-002 ... 77
HOA1870-031 ... 78
HOA1877-001 ... 78
HOA1879-015 ... 78
HOA1882-012 ... 78
HOA2498-002 ... 77
HOA6963-N51 ... 79
HOA6972-N55 ... 79
HOA6981-L51 ... 79
HOA6990-T51 ... 79
HOA7720-M22 ... 79
HOA7730-M22 ... 79
HPX005GD ... 11
HPX015GD ... 11
HPX030AS ... 11
HPX030GD ... 11
HPX050GD ... 11
HPX100AS ... 11
HPX100GD ... 11
HSD015A ... 12
ICL1010002-01 ... 26
ICL1010004-01 ... 26
ICL1210005-01 ... 26
ICL1220002-01 ... 26
ICL122R508-01 ... 26
ICL1240002-01 ... 26
ICL1250002-01 ... 26
ICL1510006-01 ... 26
ICL1512004-01 ... 26
ICL1516004-01 ... 26
ICL1522102-01 ... 26
ICL152R508-01 ... 26
ICL155R006-01 ... 26
ICL155R007-01 ... 26
ICL1580003-01 ... 26
ICL2210008-01 ... 26
ICL2212103-01 ... 26
ICL221R020-01 ... 26
ICL222R018-01 ... 26
ICL222R515-01 ... 26
ICL321R030-01 ... 26
ICL32OR530-01 ... 26
LLE103000 ... 88
LLE103101 ... 88
LLE105000 ... 88
LLE105100 ... 88
LLE205000 ... 88
LLE305000 ... 88
LLN8651721 ... 88
LLN8651722 ... 88
RDXXX-001 ... 31
RDXXX-002 ... 31
SD1440-003L ... 75
SD2440-004 ... 75
SD3443-003 ... 75
SD5443-003 ... 75
SD5600-001 ... 76
SD5610-001 ... 76
SD5620-001 ... 76
SD5630-001 ... 76
SDP8405-003 ... 75
SDP8406-002 ... 75
SDP8436-003 ... 75
SDP8600-001 ... 76
SDX010IND4 ... 11

SDX05D4 10
SDX15A2 10
SDX15D4-A 10
SE1450-003L 74
SE1470-003L 74
SE2460-003 74
SE2470-002 74
SE3455-004 74
SE3470-003 74
SE5455-003 74
SE5470-004 74
SEP8505-003 74
SEP8506-002 74
SEP8705-003 74
SEP8736-003 74
SMD2440-012 75
SME2470-021 74
SR13C-A1 72
SR13D-A1 72
SR13F-A1 72
SR13R-A1 72
SR16C-J4 73
SR16C-J6 73
SR16C-N 73
SR17C-J6 73
SR17C-J7 73
SR3B-A1 72
SR3C-A1 72
SR3F-A1 72
SR3G-A1 72
SR4P3-A1 72
SS40A 69
SS40A-F 69
SS40A-T2 69
SS40A-T3 69
SS41 68
SS411A 68
SS413A 68
SS441A 68
SS443A 68
SS449A 68
SS461A 68
SS466A 68
SS495A 70
SS495A-SP 70
SS495A1-S 70
SS496A1 70
SS49E-L 69
SS49E-T2 69
SS49E-T3 69
SS511AT 68
SS513AT 68
SS51T 68
SS541AT 68
SS543AT 68
SS549AT 68
SS561AT 68
SS566AT 68
SS59ET 69
SS94A1 70
SS94A1B 70
SS94A1E 70
SS94A1F 70
SS94A2 70
SS94A2C 70
SS94A2D 70
SS94B1 70
SS94B1A 70
TD4A 20
TD5A 20
Temperature - Probes
Air Conditioning 28
Air/Gas 29
Earth Return (Ground) 28
ES110 Inlet Air 27
ES120 Coolant/Oil 27
Immersion 29
Refrigerant 28
Surface 28
Thermostats - Commerical
2450CM Ceramic Manual Reset 35
2450HR Phenolic Automatic Reset 34
2450R Fully Sealed 37
2450R Phenolic Annular Auto. Reset . 37
2450R Phenolic Automatic Reset 34
2450R Phenolic "One-shot" ½ in 36
2450R Protected 37
2450RC Ceramic Automatic Reset 35
2450RCH Ceramic Automatic Reset ... 35
2450RCH Ceramic "One-shot" ½ in 36
2450A Heat Detection 36
2455A Heat Detection 36
2455R Phenolic Automatic Reset 34
2455R Phenolic "One-shot" ½ in 36
2455R Protected 37
2455RBV Overmolded Auto.Reset 36
2450RC Ceramic Automatic Reset 35
2455RC Ceramic "One-shot" ½ in 36
2455RM Phenolic Manual Reset 35
2467RC Ceramic "One-shot" ½ in 36
2467RCH Ceramic "One-shot" ½ in 36
Standard Mounting Bracket Guide 40
Standard Terminal Guide 38
Thermostats - High Reliability
3200 Aerospace 63
3MS1 QPL Military 63
3500 Military 64
3153 Low Silhouette 64
Thermostats - Precision
3000 Custom-packaged 45
3001 Non-hermetic 42
3001U Non-hermetic 42
3004 Non-hermetic 42
3100 Hermetic 43
3100U Hermetic 43
3100UX Hermetic 43
3106 Hermetic 43
3150 Low Silhouette Hermetic 43
3150U Low Silhouette Hermetic 43
3150UX Low Silhouette Hermetic 43
3156 Low Silhouette Hermetic 43
3156U Low Silhouette Hermetic 43
3450CM Ceramic Manual Reset 47
3450HR Phenolic Automatic Reset 46
3450R Phenolic Automatic Reset 46
3450R Phenolic "One-shot" ½ in 48
3450RC Ceramic Automatic Reset 47
3450RC Ceramic "One-shot" ½ in 48
3450RCH Ceramic Automatic Reset ... 47
3450RCH Ceramic "One-shot ½ in 48
3455R Phenolic Automatic Reset 46
3455R Phenolic "One-shot" ½ in 49
3455RC Ceramic Automatic Reset 47
3455RC Ceramic "One-shot" ½ in 49
3455RBV Overmolded Auto. Reset 48
3455RM Phenolic Manual Reset 47
3600 TO-5 Thermal 44
3601 TO-5 Thermal 44
3800 Industrial Grade 46
Standard Mounting Bracket Guide 51
Standard Terminal Guide 50
V5A010CB 96
V5A010CB4E 96
V5B010CB3 96
V5B010FB3 96
V5B010TB 96
V5B210CB 96
V5B210CB1C 96
V5B210CB1E 96
V5B210CB3D 96
V5C010BB 96
V5C010BB1G 96
V5C010BB3B 96
V5C010BB3D 96
V5C010EB3 96
V5C010TB3 96

V5D030BB 96
V5P010CB 96
V5R030CB 96
V5S020CB 96
V5S030CB 96
V7-1A17D8 97
V7-1A17D8-022 98
V7-1A17P02 97
V7-1B10E9-207 98
V7-1B17D8 97
V7-1B17D8-048 98
V7-1B17D8-263 98
V7-1B19D8-022 98
V7-1B19E9 97
V7-1C17D8 97
V7-1C17D8-002 98
V7-1C17D8-022 98
V7-1C17D8-048 98
V7-1C17D8-201 98
V7-1C17D8-207 98
V7-1C17D8-263 98
V7-1C17E9 97
V7-1C17E9-002 98
V7-1C17E9-201 98
V7-1C17E9-207 98
V7-1C18E9 97
V7-1C18E9-022 98
V7-1D10D8 97
V7-1E10D8 97
V7-1E17P02 97
V7-1E19E9 97
V7-1S17D8 97
V7-1S17D8-022 98
V7-1S17D8-201 98
V7-1S17D8-207 98
V7-1S17D8-263 98
V7-1V19E9 97
V7-1V19E9-048 98
V7-1V19E9-207 98
V7-1Z19E9 97
V7-2A17D8-022 98
V7-2A17D8-207 98
V7-2A17E9 97
V7-2B17D8 97
V7-2B17D8-022 98
V7-2B17D8-048 98
V7-2B17D8-201 98
V7-2B17D8-207 98
V7-2B17E9 97
V7-2B17E9-002 98
V7-2B17P02 97
V7-2B19E9-048 98
V7-2S17D8 97
V7-2S17D8-022 98
V7-2S17D8-201 98
V7-2S17D8-263 98
V7-3A17D8 97
V7-3E10E8 97
V7-3E10E9 97
V7-3E17D8 97
V7-3E17E9 97
V7-3E17E9-022 98
V7-3E19E9 97
V7-3S17D8-022 98
V7-3S17D8-048 98
V7-3S17E9 97
V7-3S17E9-022 98
V7-3S17E9-263 98
V7-4A17D8 97
V7-4A18E9 97
V7-4S17D8 97
V7-5D17E9 97
V7-6B19D8 97
V7-6C17D8 97
V7-6C17D8-263 98
V7-6C18D8-002 98
V7-6C18D8-048 98
V7-7A19D8 97
V7-7B17D8-201 98
V7-7B19D8-263 98
V7-7D17D8-207 98
V7-9W1AE9-048 98
XCA415AN 7
XCX01DNC 7
XCX01DNH 7
XCX15DNC 7
XPC01DFC 7
XPC15DTC 7
XSXL04GF 7
ZM10B10A01 93
ZM50E10A01 93
ZM50E10D01 92
ZM50E10E01 94
ZM50E70A01 93
ZM50E70D01 92
ZM50E70E01 94
ZM90G20A01 93
ZV10B70A01 94
ZV50E10A01 94
ZV50E10B01 95
ZV50E20A01 94
ZV50E20F01 95
ZV50E70C01 95
ZV50E70F01 95
ZW10E15CD1 95
ZW10E90FW1 95
ZW50F15AD1 95
ZX10C10A01 93
ZX40E10C01 93
ZX40E10E01 94
ZX40E30A01 93
ZX40E30C01 93
ZX40E30E01 94

Honeywell Sensing and Control designs, manufactures and markets the industry's most extensive line of sensing and control technologies available from a single switch or sensor manufacturer. You can trust Honeywell for developing the right products for your applications.

Warranty/Remedy

Honeywell warrants goods of its manufacture as being free of defective materials and faulty workmanship. Honeywell's standard product warranty applies unless agreed to otherwise by Honeywell in writing; please refer to your order acknowledgement or consult your local sales office for specific warranty details. If warranted goods are returned to Honeywell during the period of coverage, Honeywell will repair or replace, at its option, without charge those items it finds defective. **The foregoing is buyer's sole remedy and is in lieu of all warranties, expressed or implied, including those of merchantability and fitness for a particular purpose. In no event shall Honeywell be liable for consequential, special, or indirect damages.**

While we provide application assistance personally, through our literature and the Honeywell web site, it is up to the customer to determine the suitability of the product in the application.

Specifications may change without notice. The information we supply is believed to be accurate and reliable as of this printing. However, we assume no responsibility for its use.

Sales and Service

Honeywell serves its customers through a worldwide network of sales offices, representatives and distributors. For application assistance, current specifications, pricing or name of the nearest Authorized Distributor, contact your local sales office or:

E-mail: info.sc@honeywell.com

Internet: www.honeywell.com/sensing

Phone and Fax:

Asia Pacific	+65 6355-2828
	+65 6445-3033 Fax
Europe	+44 (0) 1698 481481
	+44 (0) 1698 481676 Fax
Latin America	+1-305-805-8188
	+1-305-883-8257 Fax
USA/Canada	+1-800-537-6945
	+1-815-235-6847
	+1-815-235-6545 Fax

Automation and Control Solutions
Sensing and Control
Honeywell
11 West Spring Street
Freeport, Illinois 61032 USA
www.honeywell.com

Honeywell

100455-3-EN IL50 GLO
May 2005
© 2005 Honeywell International Inc. All rights reserved.

ООО «ЛайфЭлектроникс» “LifeElectronics” LLC

ИНН 7805602321 КПП 780501001 Р/С 40702810122510004610 ФАКБ "АБСОЛЮТ БАНК" (ЗАО) в г.Санкт-Петербурге К/С 30101810900000000703 БИК 044030703

Компания «Life Electronics» занимается поставками электронных компонентов импортного и отечественного производства от производителей и со складов крупных дистрибьюторов Европы, Америки и Азии.

С конца 2013 года компания активно расширяет линейку поставок компонентов по направлению коаксиальный кабель, кварцевые генераторы и конденсаторы (керамические, пленочные, электролитические), за счёт заключения дистрибьюторских договоров

Мы предлагаем:

- *Конкурентоспособные цены и скидки постоянным клиентам.*
- *Специальные условия для постоянных клиентов.*
- *Подбор аналогов.*
- *Поставку компонентов в любых объемах, удовлетворяющих вашим потребностям.*

- *Приемлемые сроки поставки, возможна ускоренная поставка.*
- *Доставку товара в любую точку России и стран СНГ.*
- *Комплексную поставку.*
- *Работу по проектам и поставку образцов.*
- *Формирование склада под заказчика.*

- *Сертификаты соответствия на поставляемую продукцию (по желанию клиента).*
- *Тестирование поставляемой продукции.*
- *Поставку компонентов, требующих военную и космическую приемку.*
- *Входной контроль качества.*
- *Наличие сертификата ISO.*

В составе нашей компании организован Конструкторский отдел, призванный помогать разработчикам, и инженерам.

Конструкторский отдел помогает осуществить:

- *Регистрацию проекта у производителя компонентов.*
- *Техническую поддержку проекта.*
- *Защиту от снятия компонента с производства.*
- *Оценку стоимости проекта по компонентам.*
- *Изготовление тестовой платы монтаж и пусконаладочные работы.*

Тел: +7 (812) 336 43 04 (многоканальный)
Email: org@lifeelectronics.ru

www.lifeelectronics.ru