M2C

Indicator (Cylindrical 12-dia.)

CSM_M2C_DS_E_4_1

Indicator with Cylindrical 20-mm × 12-dia. Body

- Same basic design as the A3C Pushbutton Switch.
- Good illumination with even surface brightness.
- Cylindrical body means panel cutouts can be made easily.

RoHS Compliant

⚠ Refer to *Safety Precautions for All Pushbutton Switches* and *Safety Precautions* for the A3C.

List of Models

Appearance		Model
Rectangular	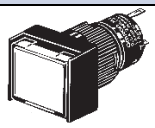	M2CJ
Square	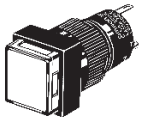	M2CA
Round		M2CT

Model Number Legend

The model numbers used to order sets of Units are illustrated below. One set comprises the Display, Lamp, and Socket Unit.
For information on combinations, refer to *Ordering Information*

(1) (2) (3) (4) (5)

M 2 C J - 9 0 A 1 - 24E R

(1) Shape of Display

Symbol	Shape
J	Rectangular
A	Square
T	Round

(2) Terminal Type

Symbol	Terminal type
0	Solder terminals

(3) Lighting Type

Symbol	Lighting type
1	Illumination only

- Colored-illumination models are also available. For details, refer to page 3.

▶ "Colored-illumination" models operate in the way shown below:

Unlit: White
Lit: Color

The built-in LED is colored.

(4) Lighting Method

LED lamp-lighted Models

Symbol	Operating voltage
05E	5 VDC
12E	12 VDC
24E	24 VDC

Incandescent Lamp-lighted Models

Symbol	Operating voltage
06	5 VAC/VDC
14	12 VAC/VDC
28	24 VAC/VDC

(5) Color of Display

For LED lamp

Symbol	Color
R	Red
Y	Yellow
G	Green
W	White

For incandescent lamp

Symbol	Color
R	Red
Y	Yellow
G	Green
A	Blue
W	White

Ordering Information

Ordering as a Set

The model numbers used to order sets of Units are given in the following tables. One set comprises the Display, Lamp, and Socket Unit.

Rectangular Models

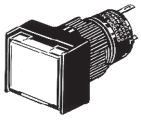

Square Models

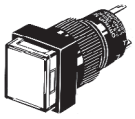

Round Models

Solder Terminals

Appearance	Lighting	Model number (for set)	Display color symbol
Rectangular (M2CJ)	LED lamp	**M2CJ-90A1-05E□**	R: red Y: yellow G: green W: white
		M2CJ-90A1-12E□	
		M2CJ-90A1-24E□	
	Incandescent lamp	**M2CJ-90A1-06□**	R: red Y: yellow G: green W: white A: blue
		M2CJ-90A1-14□	
		M2CJ-90A1-28□	
Square (M2CA)	LED lamp	**M2CA-90A1-05E□**	R: red Y: yellow G: green W: white
		M2CA-90A1-12E□	
		M2CA-90A1-24E□	
	Incandescent lamp	**M2CA-90A1-06□**	R: red Y: yellow G: green W: white A: blue
		M2CA-90A1-14□	
		M2CA-90A1-28□	
Round (M2CT)	LED lamp	**M2CT-90A1-05E□**	R: red Y: yellow G: green W: white
		M2CT-90A1-12E□	
		M2CT-90A1-24E□	
	Incandescent lamp	**M2CT-90A1-06□**	R: red Y: yellow G: green W: white A: blue
		M2CT-90A1-14□	
		M2CT-90A1-28□	

Note: Enter the desired color symbol for the Display in the □ at the end of the model number.

Individual models: Refer to pages 4 to 5.
(The Display, Lamp, and Socket Unit can be ordered separately.)

■ Ratings: Refer to page 6. ■ Dimensions: Refer to page 7.
■ Accessories: Refer to the A3C.

Ordering Information

Illumination-only and Colored-illumination LED Models

"Illumination only" describes LED models for which the screen color is the same whether the LED is lit or not. The screen simply becomes brighter when the LED lights.
Example: Red LED

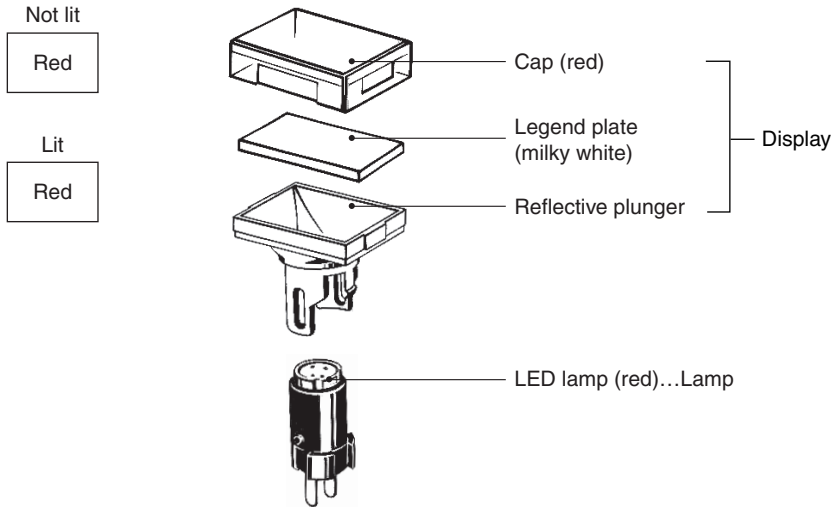

"Colored illumination" describes LED models for which the screen color is white when the LED is not lit and changes to the color of the LED lamp when the LED is lit.

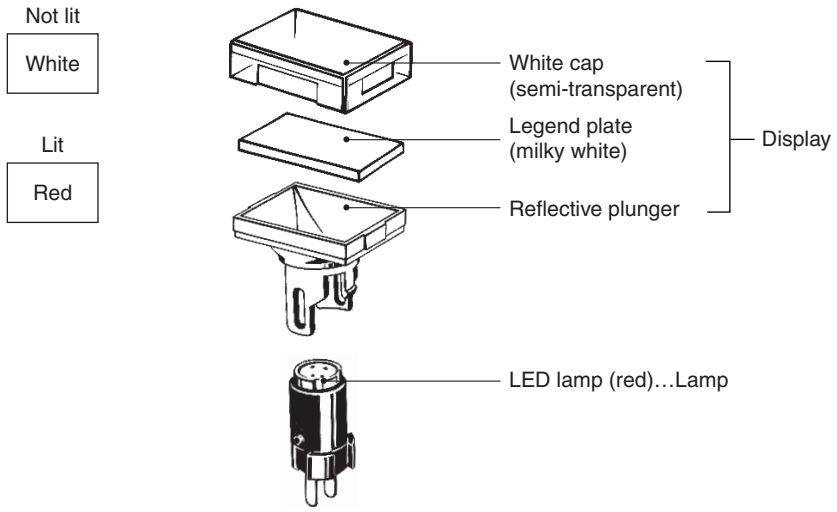

Ordering: With colored-illumination models, order the Display, Lamp, and Socket Unit as shown in the following table.

Illuminated color	Display	Lamp (LED)		Socket Unit
Red	IP40 A3C□-500W Enter one of the following symbols in □. J: Rectangular A: Square T: Round	**A16-□DR**	Enter one of the following symbols in □. 5: 5 VDC 12: 12 VDC 24: 24 VDC	Refer to page 5. Order the Socket Unit that is appropriate for the Display.
Yellow		**A16-□DY**		
Green		**A16-□DG**		

Ordering Information

Ordering Individually .....Displays, Lamps, and Socket Units can be ordered separately. Combinations that are not available as sets can be created using individual Units. Also, store the parts as spares for maintenance and repairs.

Ordering: Specify a model number from the following page.

Display

Rectangular

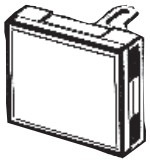

Square

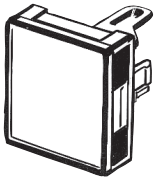

Round

Lamp

LED Lamp

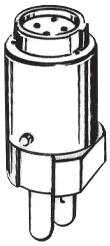

Incandescent lamp

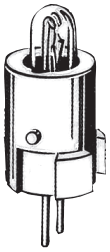

Socket Unit

Rectangular

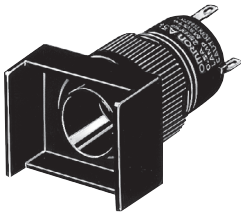

Square

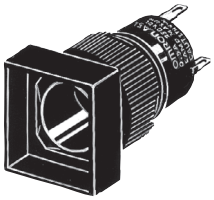

Round

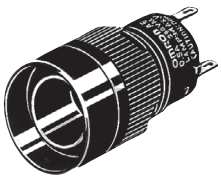

Ordering set combinations: Refer to page 2.

■ Ratings: Refer to page 6. ■ Dimensions: Refer to page 7.
■ Accessories: Refer to the A3C.

Ordering Information

Ordering Individually ..... The Display, Lamp, and Socket Unit can be ordered separately. They can also be used as inventory for maintenance parts.

Display (Lighted Models)

LED Lamp

Appearance / Button color	Rectangular	Square	Round
Red	A3CJ-500R	A3CA-500R	A3CT-500R
Yellow	A3CJ-500Y	A3CA-500Y	A3CT-500Y
Green	A3CJ-500GY	A3CA-500GY	A3CT-500GY
White	A3CJ-500W	A3CA-500W	A3CT-500W

Note: The red, yellow, and white Displays listed above can be used with either LED lamp-lighted models or incandescent lamp-lighted models.

Incandescent Lamp

Appearance / Button color	Rectangular	Square	Round
Red	A3CJ-500R	A3CA-500R	A3CT-500R
Yellow	A3CJ-500Y	A3CA-500Y	A3CT-500Y
Green	A3CJ-500G	A3CA-500G	A3CT-500G
White	A3CJ-500W	A3CA-500W	A3CT-500W
Blue	A3CJ-500A	A3CA-500A	A3CT-500A

Lamp

LED Lamp

Color / Rated voltage	Red	Yellow	Green	White
5 VDC	A16-5DR	A16-5DY	A16-5DG	A16-5DW
12 VDC	A16-12DR	A16-12DY	A16-12DG	A16-12DW
24 VDC	A16-24DR	A16-24DY	A16-24DG	A16-24DW

Incandescent Lamp

Rated voltage	Model
6 VAC/DC	A16-5
14 VAC/DC	A16-12
28 VAC/DC	A16-24

Socket Unit

Sealing	IP40		
	Rectangular	Square	Round
Appearance / Terminal	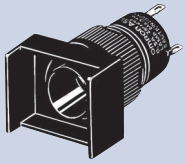	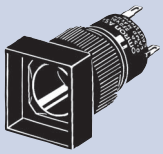	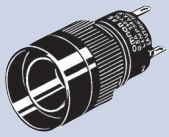
Solder terminals	M2CJ-7001	M2CA-7001	M2CT-7001

Specifications

Ratings

LED Lamp

Rated voltage	Rated current	Operating voltage	Internal limiting resistance
5 VDC	30 mA	5 VDC±5%	33 Ω
12 VDC	15 mA	12 VDC±5%	270 Ω
24 VDC	10 mA	24 VDC±5%	1,600 Ω

Incandescent Lamp

Rated voltage	Rated current	Operating voltage
6 VAC/VDC	60 mA	5 VAC/VDC
14 VAC/VDC	40 mA	12 VAC/VDC
28 VAC/VDC	24 mA	24 VAC/VDC

Ambient operating temperature	–10°C to +55°C (with no icing or condensation)
Ambient operating humidity	35% to 85%RH
Ambient storage temperature	–25°C to +65°C

Approved Standard Ratings

UL (File No. E41515), CSA (File No. LR45258)

LED: 24 VDC max.
Incandescent lamp: 1 W at 28 VDC/VAC

Note: Certification has been obtained for the Indicator.
For detailed information on individual products that have received certification, consult your supplier.

Nomenclature

Model Structure

Shape of Display

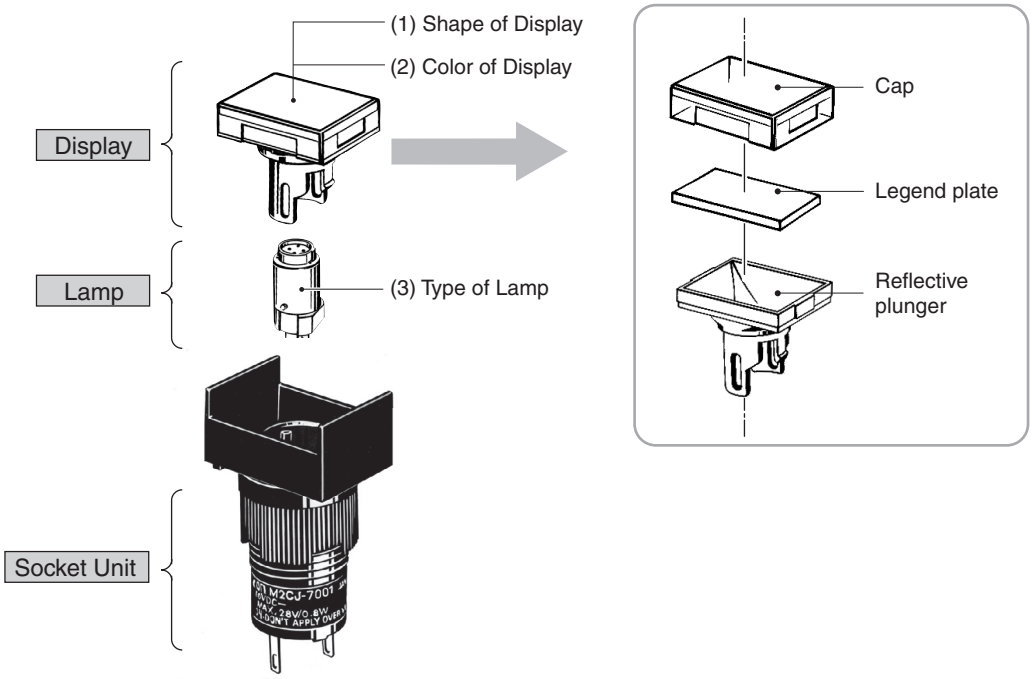

	Type	Specifications
(1)	Shape of Pushbutton Rectangular (M2CJ) Square (M2CA) Round (M2CT)	---
(2)	LED Lamp-lighted Models Red, yellow, green, white Incandescent Lamp-lighted Models Red, yellow, green, white, blue	---
(3)	LED Lamp	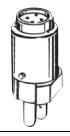
	Incandescent Lamp	

Dimensions

(Unit: mm)

Rectangular Models (M2CJ)	Square Models (M2CA)	Round Models (M2CT)
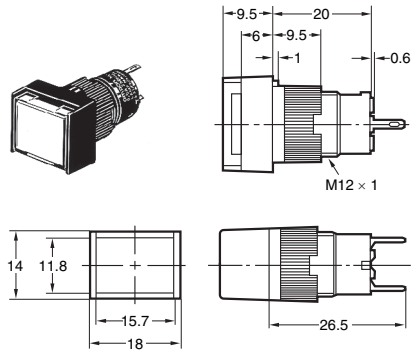	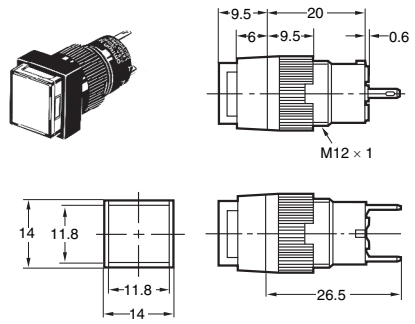	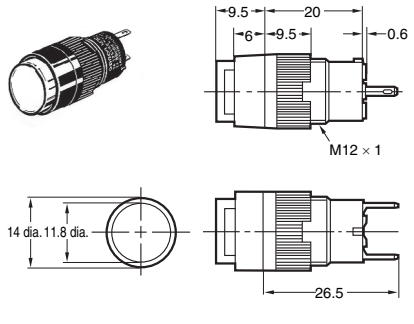

Note: Unless specified, there is a tolerance of ±0.4 mm for dimensions.

Terminal Connections

Solder terminal

Terminal Hole Dimensions

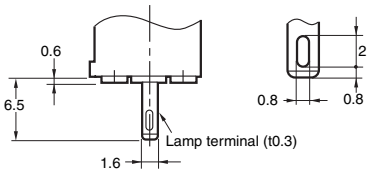

Terminal Arrangement (bottom view)

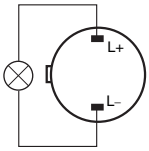

Panel Cutout (Top View)

	Rectangular/M2CJ	Square/M2CA, Round/M2CT
Indicator Unit only	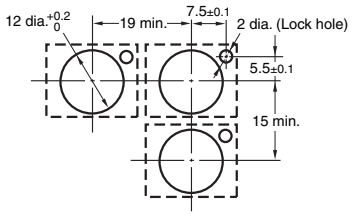 Note: Recommended panel thickness: 1.0 to 3.2 mm.	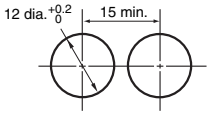 Note: Recommended panel thickness: 1.0 to 3.2 mm.
With Dust Cover	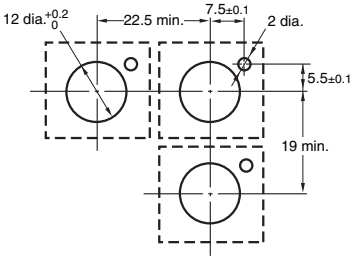	---

• If the panel is to be finished (e.g., coated), make sure that the panel meets the specified dimensions after the coating.

Accessories, Replacements, and Tools

The accessories, replacements, and tools for the A3C Lighted Pushbutton Switch can also be used with the A3C. Refer to the A3C.

Safety Precautions

Refer to *Safety Precautions for Pushbutton Switches* and *Safety Precautions* for the A3C.

■ Ratings: Refer to page 6. ■ Dimensions: Refer to this page.

- Application examples provided in this document are for reference only. In actual applications, confirm equipment functions and safety before using the product.
- Consult your OMRON representative before using the product under conditions which are not described in the manual or applying the product to nuclear control systems, railroad systems, aviation systems, vehicles, combustion systems, medical equipment, amusement machines, safety equipment, and other systems or equipment that may have a serious influence on lives and property if used improperly. Make sure that the ratings and performance characteristics of the product provide a margin of safety for the system or equipment, and be sure to provide the system or equipment with double safety mechanisms.

Note: Do not use this document to operate the Unit.

OMRON Corporation
ELECTRONIC AND MECHANICAL COMPONENTS COMPANY **Contact: www.omron.com/ecb**

Cat. No. A206-E1-01
0812(0207)(O)

ООО «ЛайфЭлектроникс» “LifeElectronics” LLC

ИНН 7805602321 КПП 780501001 Р/С 40702810122510004610 ФАКБ "АБСОЛЮТ БАНК" (ЗАО) в г.Санкт-Петербурге К/С 30101810900000000703 БИК 044030703

Компания «Life Electronics» занимается поставками электронных компонентов импортного и отечественного производства от производителей и со складов крупных дистрибьюторов Европы, Америки и Азии.

С конца 2013 года компания активно расширяет линейку поставок компонентов по направлению коаксиальный кабель, кварцевые генераторы и конденсаторы (керамические, пленочные, электролитические), за счёт заключения дистрибьюторских договоров

Мы предлагаем:

- *Конкурентоспособные цены и скидки постоянным клиентам.*
- *Специальные условия для постоянных клиентов.*
- *Подбор аналогов.*
- *Поставку компонентов в любых объемах, удовлетворяющих вашим потребностям.*

- *Приемлемые сроки поставки, возможна ускоренная поставка.*
- *Доставку товара в любую точку России и стран СНГ.*
- *Комплексную поставку.*
- *Работу по проектам и поставку образцов.*
- *Формирование склада под заказчика.*

- *Сертификаты соответствия на поставляемую продукцию (по желанию клиента).*
- *Тестирование поставляемой продукции.*
- *Поставку компонентов, требующих военную и космическую приемку.*
- *Входной контроль качества.*
- *Наличие сертификата ISO.*

В составе нашей компании организован Конструкторский отдел, призванный помогать разработчикам, и инженерам.

Конструкторский отдел помогает осуществить:

- *Регистрацию проекта у производителя компонентов.*
- *Техническую поддержку проекта.*
- *Защиту от снятия компонента с производства.*
- *Оценку стоимости проекта по компонентам.*
- *Изготовление тестовой платы монтаж и пусконаладочные работы.*

Тел: +7 (812) 336 43 04 (многоканальный)
Email: org@lifeelectronics.ru

www.lifeelectronics.ru