PRELIMINARY

W48S87-04

Spread Spectrum 3 DIMM Desktop Clock

Features

- **Outputs**
  - **4 CPU Clock (2.5V or 3.3V, 50 to 83.3 MHz)**
  - **7 PCI (3.3V)**
  - **1 48-MHz for USB (3.3V)**
  - **1 24-MHz for Super I/O (3.3V)**
  - **2 REF (3.3V)**
  - **1 IOAPIC (2.5V or 3.3V)**
  - **12 SDRAM**
- **Serial data interface provides additional frequency selection, individual clock output disable, and other functions**
- **Smooth transition supports dynamic frequency assignment**
- **Frequency selection not affected during power down/up cycle**
- **Supports a variety of power-saving options**
- **3.3V operation**
- **Available in 48-pin SSOP (300 mils)**

Key Specifications

±0.5% Spread Spectrum Modulation: ..... ±0.5%

Jitter (Cycle-to-Cycle): .....250 ps

Duty Cycle: 45-55%

CPU-PCI Skew: .....1 to 4 ns

PCI-PCI or CPU-CPU Skew: .....250 ps

Table 1. Pin Selectable Frequency[1]

Input Address			CPU, SDRAM Clocks (MHz)	PCI Clocks (MHz)
FS2	FS1	FS0		
0	0	0	50.0	25.0
0	0	1	75.0	32.0
0	1	0	83.3	41.65
0	1	1	68.5	34.25
1	0	0	55.0	27.5
1	0	1	75.0	37.5
1	1	0	60.0	30.0
1	1	1	66.8	33.4

Block Diagram

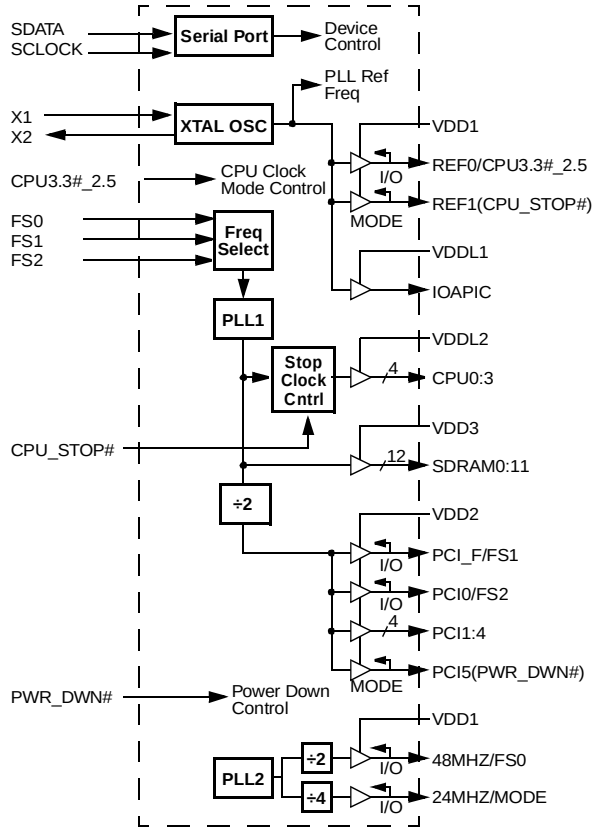

Pin Configuration[2]

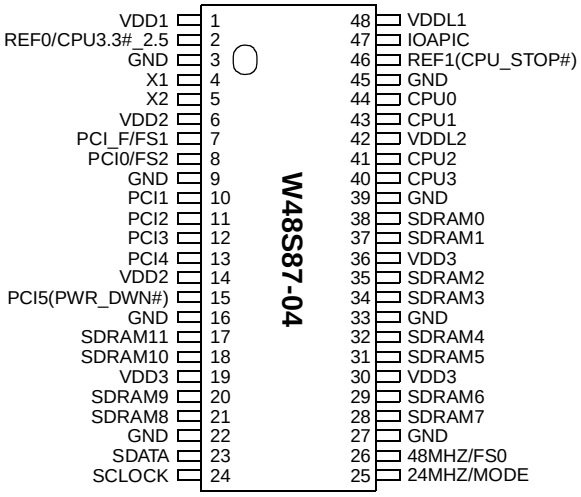

Notes:

1. Additional frequency selections provided by serial data interface; refer to *Table 5* on page 10.
2. Signal names in parenthesis denotes function is selectable through mode pin register strapping.

Pin Definitions

Pin Name	Pin No.	Pin Type	Pin Description
CPU0:3	44, 43, 41, 40	O	***CPU Clock Outputs 0 through 3:*** These four CPU clock outputs are controlled by the CPU_STOP# control pin. Output voltage swing is controlled by voltage applied to VDDL2 and output characteristics are adjusted by input CPU3.3#_2.5.
PCI_F/FS1	7	I/O	***Fixed PCI Clock Output and Frequency Selection Bit 1:*** As an output, this pin works in conjunction with PCI0:5. Output voltage swing is controlled by voltage applied to VDD2. When an input, this pin functions as part of the frequency selection address. The value of FS0:2 determines the power-up default frequency of device output clocks as per the *Table 1*, “Pin Selectable Frequency” on page 1.
PCI0/FS2	8	I/O	***PCI Bus Clock Output 0 and Frequency Selection Bit 2:*** As an output, this pin works in conjunction with PCI1:5 and PCI_F. Output voltage swing is controlled by voltage applied to VDD2. When an input, this pin functions as part of the frequency selection address. The value of FS0:2 determines the power-up default frequency of device output clocks as per the *Table 1*, “Pin Selectable Frequency” on page 1.
PCI1:4	10, 11, 12, 13	O	***PCI Bus Clock Outputs 1 through 4:*** Output voltage swing is controlled by voltage applied to VDD2.
PCI5(PWR_DWN#)	15	I/O	***PCI Bus Clock Output 5 or Power-Down Control:*** As an output, this pin works in conjunction with PCI0:4 and PCI_F. Output voltage swing is controlled by voltage applied to VDD2. If programmed as an input (refer to MODE pin description), this pin is used for power-down control. When LOW, the device goes into a low-power standby condition. All outputs are actively held LOW while in power-down. CPU, SDRAM, and PCI clock outputs are stopped LOW after completing a full clock cycle (2–4 CPU clock cycle latency). When brought HIGH, CPU, SDRAM, and PCI outputs start with a full clock cycle at full operating frequency (3 ms maximum latency).
SDRAM0:11	38, 37, 35, 34, 32, 31, 29, 28, 21, 20, 18, 17	O	***SDRAM Clock Outputs 0 through 11:*** These twelve SDRAM clock outputs run synchronous to the CPU clock outputs. Output voltage swing is controlled by voltage applied to VDD3.
IOAPIC	47	O	***I/O APIC Clock Output:*** Provides 14.318-MHz fixed frequency. The output voltage swing is controlled by VDDL1.
48MHZ/FS0	26	I/O	***48-MHz Output and Frequency Selection Bit 0:*** Fixed clock output that defaults to 48 MHz following device power-up. Output voltage swing is controlled by voltage applied to VDD1. When an input, this pin functions as part of the frequency selection address. The value of FS0:2 determines the power-up default frequency of device output clocks as per the *Table 1*, “Pin Selectable Frequency” on page 1.
24MHZ/MODE	25	I/O	***24-MHz Output and Mode Control Input:*** Fixed clock output that defaults to 24 MHz following device power-up. Output voltage swing is controlled by voltage applied to VDD1. When an input, this pin is used for pin programming selection. It determines the functions for pins 15 and 46: **MODE** / **Pin 15** / **Pin 46** 0 / PWR_DWN# (input) / CPU_STOP# (input) 1 / PCI5 (output) / REF1 (output)

Pin Definitions (continued)

Pin Name	Pin No.	Pin Type	Pin Description
REF0/CPU3.3#_2.5	2	I/O	***Fixed 14.318-MHz Output 0 and CPU Output Voltage Swing Selection Input:*** As an output, this pin is used for various system applications. Output voltage swing is controlled by voltage applied to VDD1. REF0 is stronger than REF1 and should be used for driving ISA slots. When an input, this pin selects the CPU clock output buffer characteristics that are optimized for either 3.3V or 2.5V operation. **CPU3.3#_2.5 — VDDQ2 Voltage (CPU0:3 Swing)** 0 — 3.3V 1 — 2.5V This input adjusts CPU clock output impedance so that a nominal 20Ω output impedance is maintained. This eliminates or reduces the need to adjust external clock tuning components when changing VDDL2 voltage. CPU clock phase is also adjusted so that both CPU and SDRAM and CPU-to-PCI clock skew is maintained over the two VDDL2 voltage options. This input does not adjust IOAPIC clock output characteristics.
REF1(CPU_Stop#)	46	I/O	***Fixed 14.318-MHz Output 0 or CPU Clock Output Stop Control:*** Used for various system applications. Output voltage swing is controlled by voltage applied to VDD1. REF0 is stronger than REF1 and should be used for driving ISA slots. If programmed as an input (refer to MODE pin description), this pin is used for stopping the CPU clock outputs. When brought LOW, clock outputs CPU0:3 are stopped LOW after completing a full clock cycle (2–3 CPU clock latency). When brought HIGH, clock outputs CPU0:3 are starting beginning with a full clock cycle (2–3 CPU clock latency).
X1	4	I	***Crystal Connection or External Reference Frequency Input:*** This pin has dual functions. It can be used as an external 14.318-MHz crystal connection or as an external reference frequency input.
X2	5	I	***Crystal Connection:*** An input connection for an external 14.318-MHz crystal. If using an external reference, this pin must be left unconnected.
SDATA	23	I	***Serial Data Input:*** Data input for Serial Data Interface. Refer to Serial Data Interface section that follows.
SCLOCK	24	I	***Serial Clock Input:*** Clock input for Serial Data Interface. Refer to Serial Data Interface section that follows.
VDD1	1	P	***Power Connection:*** Power supply for crystal oscillator and REF0:1 output buffers. Connected to 3.3V supply.
VDD2	6,14	P	***Power Connection:*** Power supply for PCI clock output buffers. Connected to 3.3V supply.
VDDL1	48	P	***Power Connection:*** Power supply for IOAPIC output buffer. Connected to 2.5V or 3.3V supply.
VDDL2	42	P	***Power Connection:*** Power supply for CPU clock output buffers. Connected to 2.5V or 3.3V supply.
VDD3	19, 30, 36	P	***Power Connection:*** Power supply for SDRAM clock output buffers. Connected to 3.3V supply.
GND	3, 9, 16, 22, 27, 33, 39, 45	G	***Ground Connection:*** Connect all ground pins to the common system ground plane.

Overview

The W48S87-04, a motherboard clock synthesizer, can provide either a 2.5V or 3.3V CPU clock swing, making it suitable for a variety of CPU options. Twelve SDRAM clocks are provided in phase with the CPU clock outputs. This provides clock support for up to three SDRAM DIMMs. Fixed output frequency clocks are provided for other system functions.

Functional Description

I/O Pin Operation

Pins 2, 7, 8, 25, and 26 are dual-purpose I/O pins. Upon power-up these pins act as logic inputs, allowing the determination of assigned device functions. A short time after power-up, the logic state of these pins is latched and the pins then become clock outputs. This feature reduces device pin count by combining clock outputs with input select pins.

An external 10-kΩ "strapping" resistor is connected between each I/O pin and ground or V_{DD3}. Connection to ground sets a latch to "0", connection to V_{DD3} sets a latch to "1". *Figure 1* and *Figure 2* show two suggested methods for strapping resistor connection.

Upon W48S87-04 power-up, the first 2 ms of operation is used for input logic selection. During this period, these dual-purpose I/O pins are three-stated, allowing the output strapping resistor on each I/O pin to pull the pin and its associated capacitive clock load to either a logic HIGH or LOW state. At the end of the 2-ms period, the established logic 0 or 1 condition of each I/O is pin is then latched. Next the output buffers are enabled, which converts the I/O pins into operating clock outputs. The 2-ms timer is started when V_{DD} reaches 2.0V. The input bits can only be reset by turning V_{DD} off and then back on again.

It should be noted that the strapping resistors have no significant effect on clock output signal integrity. The drive impedance of both clock outputs is <40Ω (nominal) which is minimally affected by the 10-kΩ strap to ground or V_{DD}. As with the series termination resistor, the output strapping resistor should be placed as close to the I/O pin as possible in order to keep the interconnecting trace short. The trace from the resistor to ground or VDD should be kept less than two inches in length to prevent system noise coupling during input logic sampling.

When the clock outputs are enabled following the 2-ms input period, target (normal) output frequency is delivered assuming that V_{DD} has stabilized. If V_{DD} has not yet reached full value, output frequency initially may be below target but will increase to target once V_{DD} voltage has stabilized. In either case, a short output clock cycle may be produced from the CPU clock outputs when the outputs are enabled.

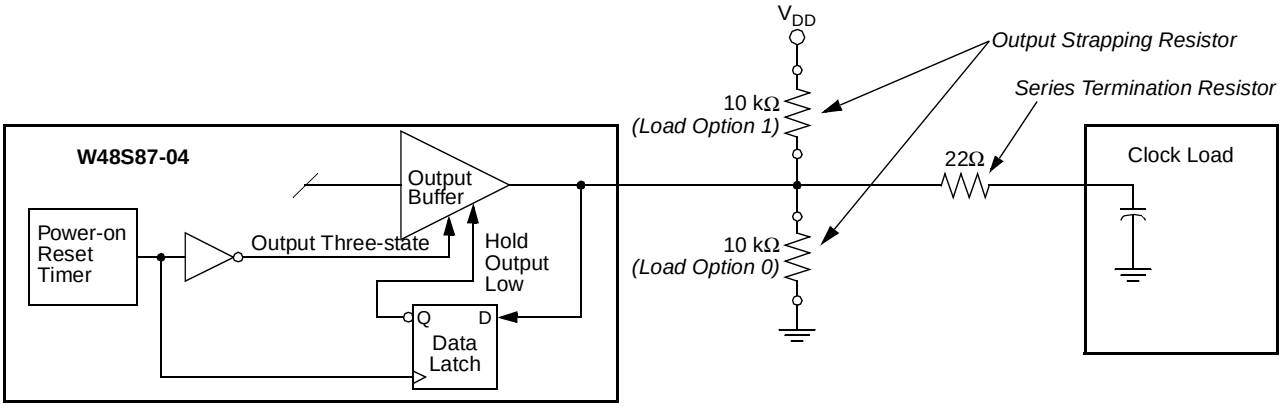

Figure 1. Input Logic Selection Through Resistor Load Option

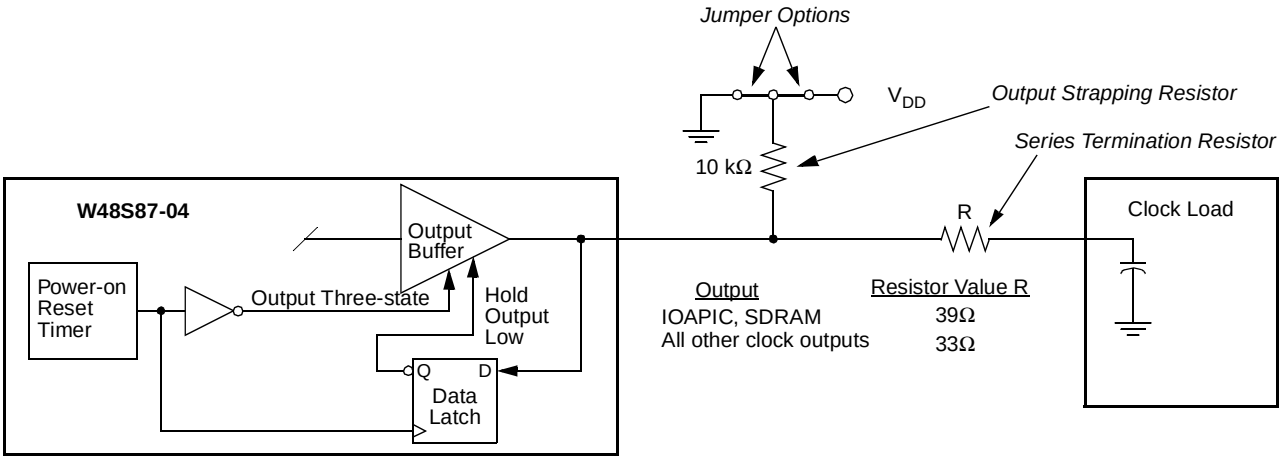

Figure 2. Input Logic Selection Through Jumper Option

CPU/PCI Frequency Selection

CPU frequency is selected with I/O pins 26, 7, and 8 (48MHz/FS0, PCI_F/FS1, and PCI0/FS2, respectively). Refer to *Table 1* for CPU/PCI frequency programming information. Additional frequency selections are available through the serial data interface. Refer to *Table 5* on page 10.

Output Buffer Configuration

Clock Outputs

All clock outputs are designed to drive serial terminated clock lines. The W48S87-04 outputs are CMOS-type, which provide rail-to-rail output swing. To accommodate the limited voltage swing required by some processors, the output buffers of CPU0:3 use a special VDDL2 power supply pin that can be tied to 2.5V nominal.

Crystal Oscillator

The W48S87-04 requires one input reference clock to synthesize all output frequencies. The reference clock can be either an externally generated clock signal or the clock generated by the internal crystal oscillator. When using an external clock signal, pin X1 is used as the clock input and pin X2 is left open. The input threshold voltage of pin X1 is $V_{DD}/2$.

The internal crystal oscillator is used in conjunction with a quartz crystal connected to device pins X1 and X2. This forms a parallel resonant crystal oscillator circuit. The W48S87-04 incorporates the necessary feedback resistor and crystal load capacitors. Including typical stray circuit capacitance, the total load presented to the crystal is approximately 20 pF. For optimum frequency accuracy without the addition of external capacitors, a parallel-resonant mode crystal specifying a load of 20 pF should be used. This will typically yield reference frequency accuracies within ±100 ppm.

Dual Supply Voltage Operation

The W48S87-04 is designed for dual power supply operation. Supply pins VDD1, VDD2, and VDD3 are connected to a 3.3V supply and supply power to the internal core circuit and to the clock output buffers, except for outputs CPU0:3 and IOAPIC. Supply pins VDDL1 and VDDL2 may be connected to either a 2.5V or 3.3V supply.

Spread Spectrum Generator

The device generates a clock that is frequency modulated in order to increase the bandwidth that it occupies. By increasing the bandwidth of the fundamental and its harmonics, the amplitudes of the radiated electromagnetic emissions are reduced. This effect is depicted in *Figure 3*.

As depicted in *Figure 3*, a harmonic of a modulated clock has a much lower amplitude than that of an unmodulated signal. The reduction in amplitude is dependent on the harmonic number and the frequency deviation or spread. The equation for the reduction is

$$dB = 6.5 + 9*\log_{10}(P) + 9*\log_{10}(F)$$

Where *P* is the percentage of deviation and *F* is the frequency in MHz where the reduction is measured.

The output clock is modulated with a waveform depicted in *Figure 4*. This waveform, as discussed in "Spread Spectrum Clock Generation for the Reduction of Radiated Emissions" by Bush, Fessler, and Hardin produces the maximum reduction in the amplitude of radiated electromagnetic emissions. The deviation selected for this chip is ±0.5% of the center frequency. *Figure 4* details the Cypress spreading pattern. Cypress does offer options with more spread and greater EMI reduction. Contact your local Sales representative for details on these devices.

Spread Spectrum clocking is activated or deactivated by selecting the appropriate values for bits 1–0 in data byte 0 of the I^2C data stream. Refer to *Table 4* for more details.

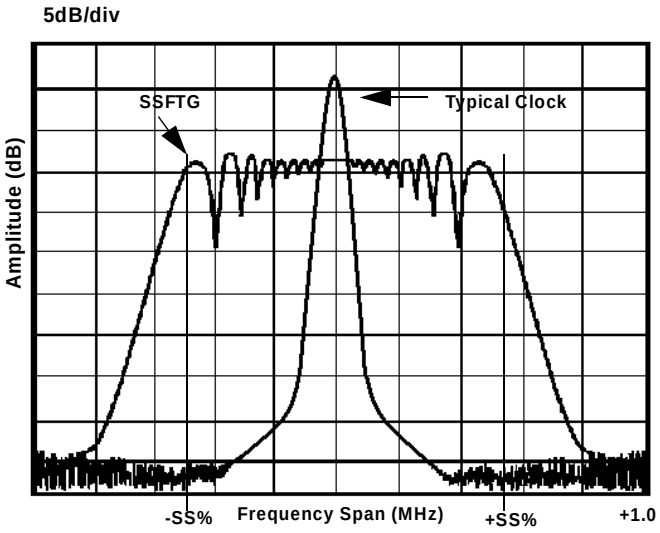

Figure 3. Clock Harmonic with and without SSCG Modulation Frequency Domain Representation

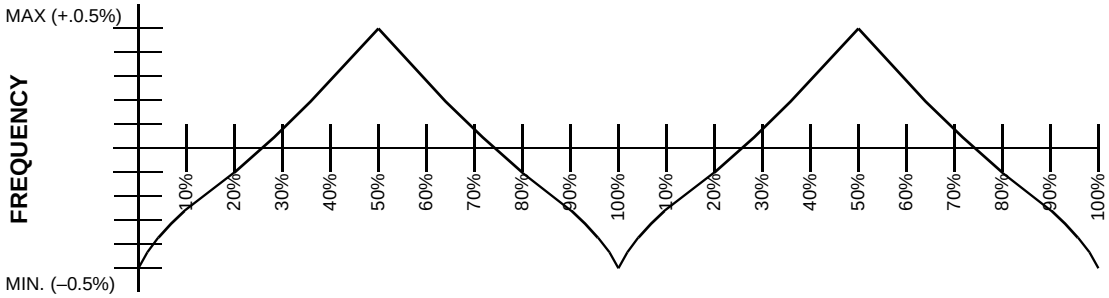

Figure 4. Typical Modulation Profile

Serial Data Interface

The W48S87-04 features a two-pin, serial data interface that can be used to configure internal register settings that control particular device functions. Upon power-up, the W48S87-04 initializes with default register settings, therefore the use of this serial data interface is optional. The serial interface is write-only (to the clock chip) and is the dedicated function of device pins SDATA and SCLOCK. In motherboard applications, SDATA and SCLOCK are typically driven by two logic outputs of the chipset. Clock device register changes are normally made upon system initialization, if any are required. The interface can also be used during system operation for power management functions. *Table 2* summarizes the control functions of the serial data interface.

Operation

Data is written to the W48S87-04 in ten bytes of eight bits each. Bytes are written in the order shown in *Table 3*.

Table 2. Serial Data Interface Control Functions Summary

Control Function	Description	Common Application
Clock Output Disable	Any individual clock output(s) can be disabled. Disabled outputs are actively held LOW.	Unused outputs are disabled to reduce EMI and system power. Examples are clock outputs to unused SDRAM DIMM socket or PCI slot.
CPU Clock Frequency Selection	Provides CPU/PCI frequency selections beyond the 50- and 66.8-MHz selections that are provided by the FS0:2 power-on default selection. Frequency is changed in a smooth and controlled fashion.	For alternate CPU devices, and power management options. Smooth frequency transition allows CPU frequency change under normal system operation.
Output Three-state	Puts all clock outputs into a high-impedance state.	Production PCB testing.
Test Mode	All clock outputs toggle in relation with X1 input, internal PLL is bypassed. Refer to *Table 4*.	Production PCB testing.
(Reserved)	Reserved function for future device revision or production device testing.	No user application. Register bit must be written as 0.

Table 3. Byte Writing Sequence

Byte Sequence	Byte Name	Bit Sequence	Byte Description
1	Slave Address	11010010	Commands the W48S87-04 to accept the bits in Data Bytes 0–6 for internal register configuration. Since other devices may exist on the same common serial data bus, it is necessary to have a specific slave address for each potential receiver. The slave receiver address for the W48S87-04 is 11010010. Register setting will not be made if the Slave Address is not correct (or is for an alternate slave receiver).
2	Command Code	Don't Care	Unused by the W48S87-04, therefore bit values are ignored ("don't care"). This byte must be included in the data write sequence to maintain proper byte allocation. The Command Code Byte is part of the standard serial communication protocol and may be used when writing to another addressed slave receiver on the serial data bus.
3	Byte Count	Don't Care	Unused by the W48S87-04, therefore bit values are ignored ("don't care"). This byte must be included in the data write sequence to maintain proper byte allocation. The Byte Count Byte is part of the standard serial communication protocol and may be used when writing to another addressed slave receiver on the serial data bus.
4	Data Byte 0	Refer to *Table 4*	The data bits in these bytes set internal W48S87-04 registers that control device operation. The data bits are only accepted when the Address Byte bit sequence is 11010010, as noted above. For description of bit control functions, refer to *Table 4*, Data Byte Serial Configuration Map.
5	Data Byte 1		
6	Data Byte 2		
7	Data Byte 3		
8	Data Byte 4		
9	Data Byte 5		
10	Data Byte 6		

Writing Data Bytes

Each bit in the data bytes control a particular device function except for the “reserved” bits which must be written as a logic 0. Bits are written MSB (most significant bit) first, which is bit 7. *Table 4* gives the bit formats for registers located in Data Bytes 0–6. *Table 5* details additional frequency selections that are available through the serial data interface. *Table 6* details the select functions for Byte 0, bits 1 and 0.

Table 4. Data Bytes 0–6 Serial Configuration Map

Bit(s)	Affected Pin		Control Function	Bit Control		Default
	Pin No.	Pin Name		0	1	
Data Byte 0						
7	--	--	(Reserved)	--	--	0
6	--	--	BYT0_SEL2	Refer to *Table 5*		0
5	--	--	BYT0_SEL1	Refer to *Table 5*		0
4	--	--	BYT0_SEL0	Refer to *Table 5*		0
3			BYT0 _FS#	Frequency Controlled by FS (2:0)	Frequency Controlled by BYT0_SEL (2:0)	0
2	22		(Reserved)			0
1–0	--	--	Bit 1 Bit 0 Function (See *Table 6* for function details) 0 0 Normal Operation 0 1 Test Mode 1 0 Spread Spectrum On 1 1 All Outputs Three-stated			00
Data Byte 1						
7	26	48MHZ	Clock Output Disable	Low	Active	1
6	25	24MHZ	Clock Output Disable	Low	Active	1
5	--	--	(Reserved)	--	--	0
4	--	--	(Reserved)	--	--	0
3	40	CPU3	Clock Output Disable	Low	Active	1
2	41	CPU2	Clock Output Disable	Low	Active	1
1	43	CPU1	Clock Output Disable	Low	Active	1
0	44	CPU0	Clock Output Disable	Low	Active	1
Data Byte 2						
7	--	--	(Reserved)	--	--	0
6	7	PCI_F	Clock Output Disable	Low	Active	1
5	15	PCI5	Clock Output Disable	Low	Active	1
4	13	PCI4	Clock Output Disable	Low	Active	1
3	12	PCI3	Clock Output Disable	Low	Active	1
2	11	PCI2	Clock Output Disable	Low	Active	1
1	10	PCI1	Clock Output Disable	Low	Active	1
0	8	PCI0	Clock Output Disable	Low	Active	1

Table 4. Data Bytes 0–6 Serial Configuration Map (continued)

Bit(s)	Affected Pin		Control Function	Bit Control		Default
	Pin No.	Pin Name		0	1	
Data Byte 3						
7	28	SDRAM7	Clock Output Disable	Low	Active	1
6	29	SDRAM6	Clock Output Disable	Low	Active	1
5	31	SDRAM5	Clock Output Disable	Low	Active	1
4	32	SDRAM4	Clock Output Disable	Low	Active	1
3	34	SDRAM3	Clock Output Disable	Low	Active	1
2	35	SDRAM2	Clock Output Disable	Low	Active	1
1	37	SDRAM1	Clock Output Disable	Low	Active	1
0	38	SDRAM0	Clock Output Disable	Low	Active	1
Data Byte 4						
7	--	--	(Reserved)	--	--	0
6	--	--	(Reserved)	--	--	0
5	--	--	(Reserved)	--	--	0
4	--	--	(Reserved)	--	--	0
3	17	SDRAM11	Clock Output Disable	Low	Active	1
2	18	SDRAM10	Clock Output Disable	Low	Active	1
1	20	SDRAM9	Clock Output Disable	Low	Active	1
0	21	SDRAM8	Clock Output Disable	Low	Active	1
Data Byte 5						
7	--	--	(Reserved)	--	--	0
5	--	--	(Reserved)	--	--	0
5	--	--	(Reserved)	--	--	0
4	47	IOAPIC	Clock Output Disable	Low	Active	1
3	--	--	(Reserved)	--	--	0
2	--	--	(Reserved)	--	--	0
1	46	REF1	Clock Output Disable	Low	Active	1
0	2	REF0	Clock Output Disable	Low	Active	1
Data Byte 6						
7	--	--	(Reserved)	--	--	0
6	--	--	(Reserved)	--	--	0
5	--	--	(Reserved)	--	--	0
4	--	--	(Reserved)	--	--	0
3	--	--	(Reserved)	--	--	0
2	--	--	(Reserved)	--	--	0
1	--	--	(Reserved)	--	--	0
0	--	--	(Reserved)	--	--	0

Table 5. Additional Frequency Selections through Serial Data Interface Data Bytes

Input Conditions			Output Frequency	
Data Byte 0, Bit 3 = 1				
Bit 6 BYT0_SEL2	Bit 5 BYT0_SEL1	Bit 4 BYT0_SEL0	CPU, SDRAM Clocks (MHz)	PCI Clocks (MHz)
0	0	0	50	25
0	0	1	75.0	32
0	1	0	83.3	41.65
0	1	1	68.5	34.25
1	0	0	55.0	27.5
1	0	1	75.0	37.5
1	1	0	60.0	30.0
1	1	1	66.8	33.4

Table 6. Select Function for Data Byte 0, Bits 0:1

Function	Input Conditions		Output Conditions			
	Data Byte 0		CPU0:3, SRAM0:11	PCI_F, PCI0:5	REF0:1, IOAPIC	48/24MHZ
	Bit 1	Bit 0				
Normal Operation	0	0	Note 3	Note 3	14.318 MHz	48/24 MHz
Test Mode	0	1	X1/2	X1/4	X1	Note 4
Spread Spectrum	1	0	Note 3 SS±0.5%	Note 3 SS±0.5%	14.318 MHz	48/24 MHz
Three-state	1	1	Hi-Z	Hi-Z	Hi-Z	Hi-Z

Note:

3. CPU, SDRAM, and PCI frequency selections are listed in *Table 1* and *Table 5*.
4. In Test Mode, the 48/24MHz clock outputs are:
   - X1/2 for 48-MHz output.
   - X1/4 for 24-MHz output.

How To Use the Serial Data Interface

Electrical Requirements

Figure 5 illustrates electrical characteristics for the serial interface bus used with the W48S87-04. Devices send data over the bus with an open drain logic output that can (a) pull the bus line LOW, or (b) let the bus default to logic 1. The pull-up resistors on the bus (both clock and data lines) establish a default logic 1. All bus devices generally have logic inputs to receive data.

Although the W48S87-04 is a receive-only device (no data write-back capability), it does transmit an “acknowledge” data pulse after each byte is received. Thus, the SDATA line can both transmit and receive data.

The pull-up resistor should be sized to meet the rise and fall times specified in AC parameters, taking into consideration total bus line capacitance.

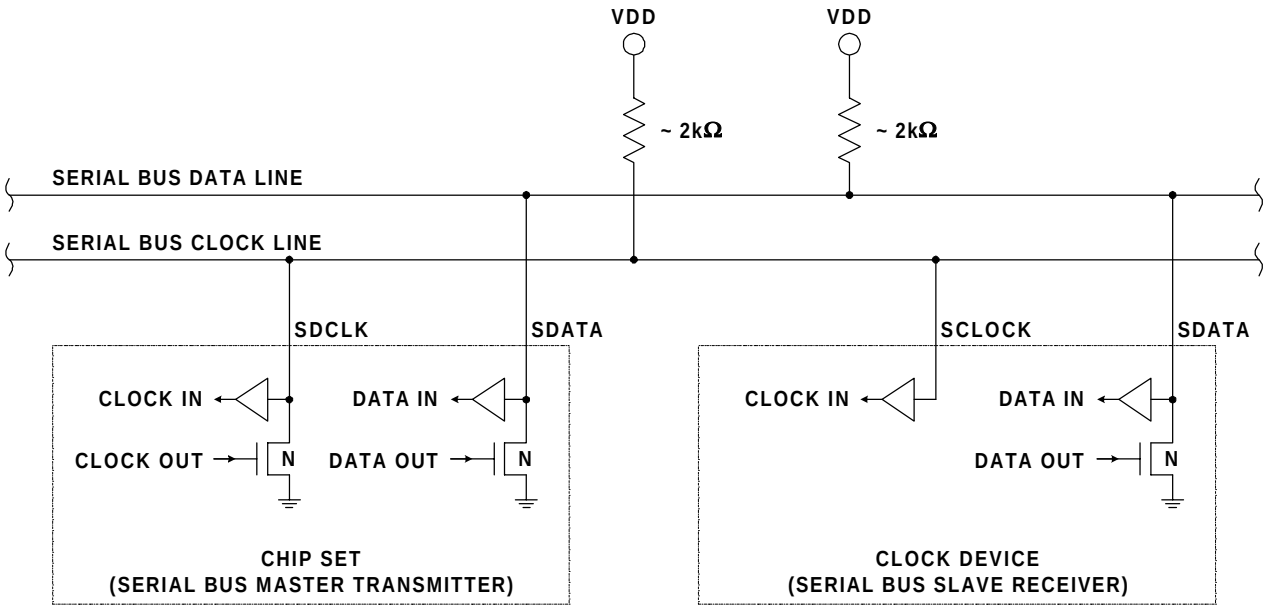

Figure 5. Serial Interface Bus Electrical Characteristics

Signaling Requirements

As shown in *Figure 6*, valid data bits are defined as stable logic 0 or 1 condition on the data line during a clock HIGH (logic 1) pulse. A transitioning data line during a clock HIGH pulse may be interpreted as a start or stop pulse (it will be interpreted as a start or stop pulse if the start/stop timing parameters are met).

A write sequence is initiated by a “start bit” as shown in *Figure 7*. A “stop bit” signifies that a transmission has ended.

As stated previously, the W48S87-04 sends an “acknowledge” pulse after receiving eight data bits in each byte as shown in *Figure 8*.

Sending Data to the W48S87-04

The device accepts data once it has detected a valid start bit and address byte sequence. Device functionality is changed upon the receipt of each data bit (registers are not double buffered). Partial transmission is allowed meaning that a transmission can be truncated as soon as the desired data bits are transmitted (remaining registers will be unmodified). Transmission is truncated with either a stop bit or new start bit (restart condition).

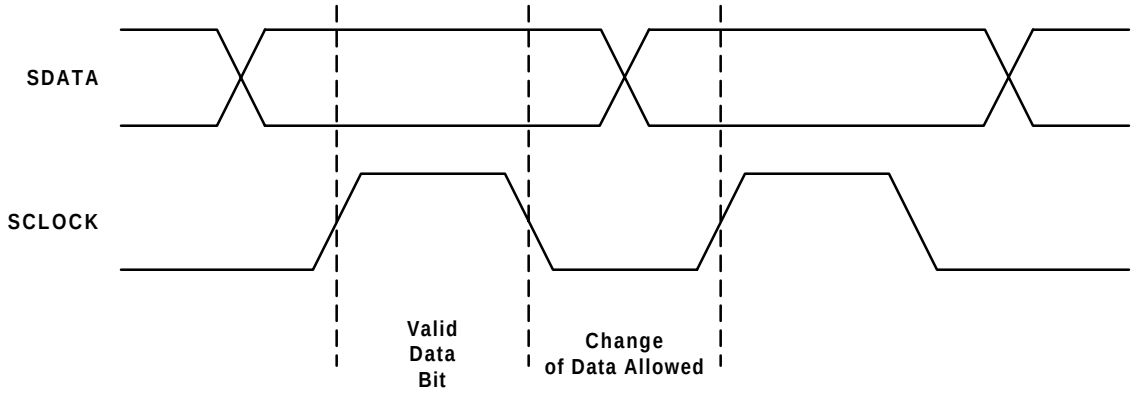

Figure 6. Serial Data Bus Valid Data Bit

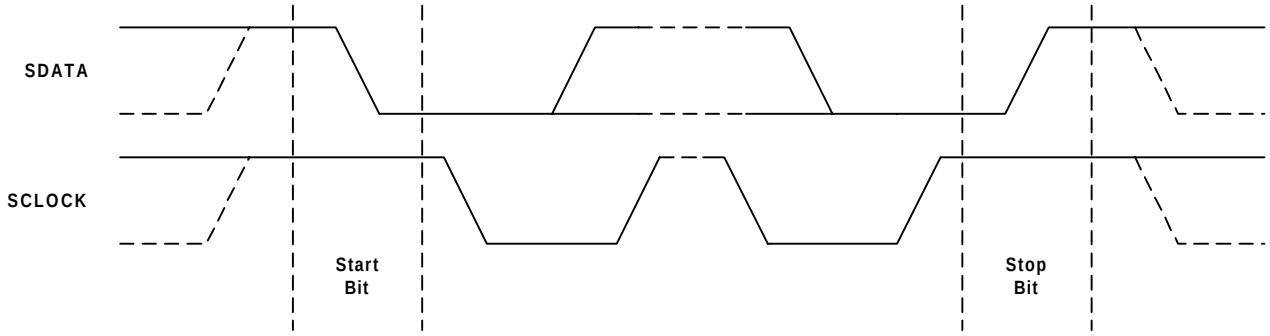

Figure 7. Serial Data Bus Start and Stop Bit

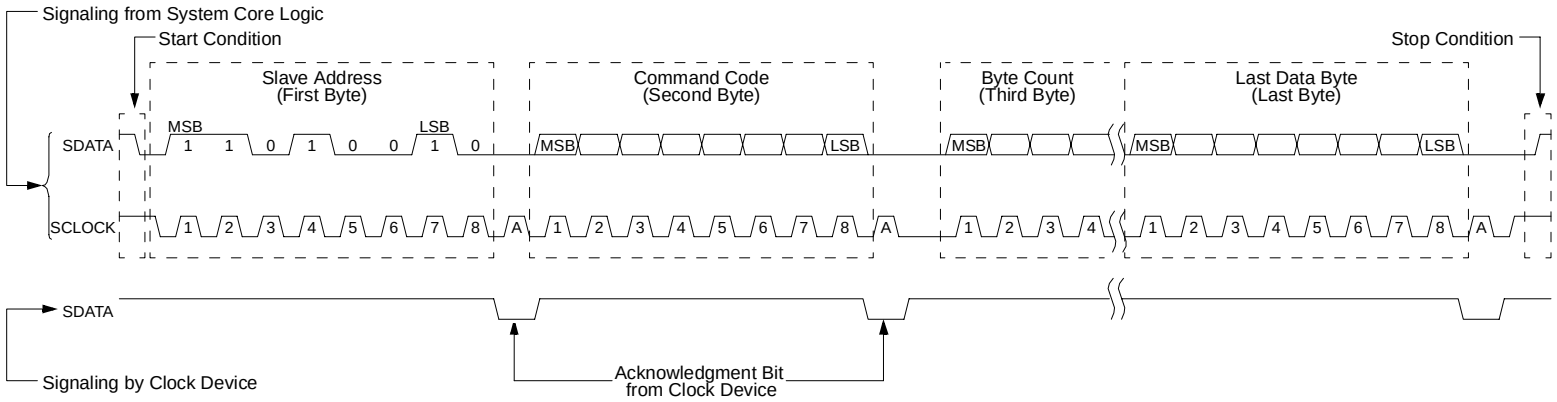

Figure 8. Serial Data Bus Write Sequence

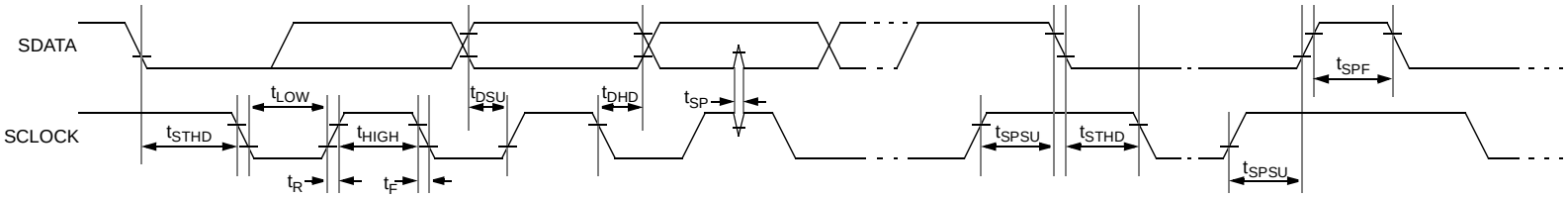

Figure 9. Serial Data Bus Timing Diagram

Absolute Maximum Ratings

Stresses greater than those listed in this table may cause permanent damage to the device. These represent a stress rating only. Operation of the device at these or any other conditions above those specified in the operating sections of this specification is not implied. Maximum conditions for extended periods may affect reliability.

Parameter	Description	Rating	Unit
V_{DD}, V_{IN}	Voltage on any pin with respect to GND	–0.5 to +7.0	V
T_{STG}	Storage Temperature	–65 to +150	°C
T_A	Operating Temperature	0 to +70	°C
T_B	Ambient Temperature under Bias	–55 to +125	°C
ESD_{PROT}	Input ESD Protection	2 (min.)	kV

Crystal Oscillator

Parameter	Description	Test Condition	Min.	Typ.	Max.	Unit
V_{TH}	X1 Input Threshold Voltage[5]			1.65		V
C_{LOAD}	Load Capacitance, Imposed on External Crystal[6]			20		pF
$C_{IN,X1}$	X1 Input Capacitance[7]	Pin X2 unconnected		40		pF

3.3V DC Electrical Characteristics (CPU3.3#_2.5 Input = 0)

T_A = 0°C to +70°C, VDD1:3 = VDDL1:2 = 3.3V±5% (3.135–3.465V)

Parameter	Description		Test Condition	Min.	Typ.	Max.	Unit
Supply Current							
I_{DD}	Combined 3.3V Supply Current		CPU0:3 =66.8 MHz Outputs Loaded[8]			160	mA
Logic Inputs (All referenced to V_{DDQ3} = 3.3V)							
V_{IL}	Input Low Voltage					0.8	V
V_{IH}	Input High Voltage			2.0			V
I_{IL}	Input Low Current[9]					10	µA
I_{IH}	Input High Current[9]					10	µA
Clock Outputs							
V_{OL}	Output Low Voltage		I_{OL} = 1 mA			50	mV
V_{OH}	Output High Voltage		I_{OH} = –1 mA	3.1			V
I_{OL}	Output Low Current	CPU0:3[10]	V_{OL} = 1.5V	55	75	105	mA
		SDRAM0:11		80	110	155	
		PCI_F, PCI0:5		55	75	105	
		IOAPIC		100	135	190	
		REF0		60	75	90	
		REF1		45	60	75	
		48/24MHZ		55	75	105	

Notes:

5. X1 input threshold voltage (typical) is $V_{DD}/2$.
6. The W48S87-04 contains an internal crystal load capacitor between pin X1 and ground and another between pin X2 and ground. Total load placed on crystal is 20 pF; this includes typical stray capacitance of short PCB traces to crystal.
7. X1 input capacitance is applicable when driving X1 with an external clock source (X2 is left unconnected).
8. All clock outputs loaded with maximum lump capacitance test load specified in AC Electrical Characteristics section.
9. W48S87-04 logic inputs have internal pull-up devices.
10. CPU0:3 loaded by 60Ω, 6-inch long transmission lines ending with 20-pF capacitors.

3.3V DC Electrical Characteristics (CPU3.3#_2.5 Input = 0) (continued)

T_A = 0°C to +70°C, VDD1:3 = VDDL1:2 = 3.3V±5% (3.135–3.465V)

Parameter	Description		Test Condition	Min.	Typ.	Max.	Unit
I_{OH}	Output High Current	CPU0:3[10]	V_{OH} = 1.5V	55	85	125	mA
		SDRAM0:11		80	120	175	
		PCI_F, PCI0:5		55	85	125	
		IOAPIC		100	150	220	
		REF0		60	85	110	
		REF1		45	65	90	
		48/24MHZ		55	85	125	
Pin Capacitance/Inductance							
C_{IN}	Input Pin Capacitance		Except X1 and X2			5	pF
C_{OUT}	Output Pin Capacitance					6	pF
L_{IN}	Input Pin Inductance					7	nH
Serial Input Port							
V_{IL}	Input Low Voltage		V_{DD} = 3.3V			$0.3V_{DD}$	V
V_{IH}	Input High Voltage		V_{DD} = 3.3V	$0.7V_{DD}$			V
I_{IL}	Input Low Current		No internal pull-up/down on SCLOCK			10	µA
I_{IH}	Input High Current		No internal pull-up/down on SCLOCK			10	µA
I_{OL}	Sink Current into SDATA, Open Drain N-Channel Device On		I_{OL} = $0.3V_{DD}$	6			mA
C_{IN}	Input Capacitance of SDATA and SCLOCK					10	pF
C_{SDATA}	Total Capacitance of SDATA Bus					400	pF
C_{SCLOCK}	Total Capacitance of SCLOCK Bus					400	pF

2.5V DC Electrical Characteristics (CPU3.3#_2.5 Input = 1)

T_A = 0°C to +70°C, VDD1:3 = 3.3V±5% (3.135–3.456V), VDDL1:2 = 2.5V±5% (2.375–2.625V)

Parameter	Description	Test Condition	Min.	Typ.	Max.	Unit
Supply Current						
$I_{DD-3.3V}$	3.3V Supply Current	CPU0:3 = 66.4 MHz Outputs Loaded[8]			300	mA
$I_{DD-2.5}$	2.5V Supply Current	CPU0:3= 66.4 MHz Outputs Loaded[8]			50	mA
Logic Inputs						
V_{IL}	Input Low Voltage				0.8	V
V_{IH}	Input High Voltage		2.0			V
I_{IL}	Input Low Current[9]				10	µA
I_{IH}	Input High Current[9]				10	µA

2.5V DC Electrical Characteristics (CPU3.3#_2.5 Input = 1) (continued)

T_A = 0°C to +70°C, VDD1:3 = 3.3V±5% (3.135–3.456V), VDDL1:2 = 2.5V±5% (2.375–2.625V)

Parameter	Description		Test Condition	Min.	Typ.	Max.	Unit
Clock Outputs							
V_{OL}	Output Low Voltage		I_{OL} = 1 mA			50	mV
V_{OH}	Output High Voltage		I_{OH} = –1 mA	2.2			V
I_{OL}	Output Low Current	CPU0:3[10]	V_{OL} = 1.25V	45	70	105	mA
		IOAPIC	V_{OL} = 1.25V	55	85	130	
I_{OH}	Output High Current	CPU0:3[10]	V_{OH} = 1.25V	40	65	95	mA
		IOAPIC	V_{OH} = 1.25V	50	80	120	
Pin Capacitance/Inductance							
C_{IN}	Input Pin Capacitance		Except X1 and X2			5	pF
C_{OUT}	Output Pin Capacitance					6	pF
L_{IN}	Input Pin Inductance					7	nH
Serial Input Port							
V_{IL}	Input Low Voltage		V_{DD} = 2.5V			$0.3V_{DD}$	V
V_{IH}	Input High Voltage		V_{DD} = 2.5V	$0.7V_{DD}$			V

3.3V AC Electrical Characteristics (CPU3.3#_2.5 Input = 0)

T_A = 0°C to +70°C, VDD1:3 = VDD1:3 = 3.3V±5% (3.135–3.465V), f_{XTL} = 14.31818 MHz
Spread Spectrum function turned off

AC clock parameters are tested and guaranteed over stated operating conditions using the stated lump capacitive load at the clock output.

CPU Clock Outputs, CPU0:3 (Lump Capacitance Test Load = 20 pF)

Parameter	Description	Test Condition/Comments	CPU = 66.8 MHz			CPU = 60 MHz			Unit
			Min.	Typ.	Max.	Min.	Typ.	Max.	
t_P	Period	Measured on rising edge at 1.5V	15			16.7			ns
f	Frequency, Actual	Determined by PLL divider ratio		66.8			59.876		MHz
t_H	High Time	Duration of clock cycle above 2.4V	5.2			6			ns
t_L	Low Time	Duration of clock cycle below 0.4V	5			5.8			ns
t_R	Output Rise Edge Rate	Measured from 0.4V to 2.4V	1		4	1		4	V/ns
t_F	Output Fall Edge Rate	Measured from 2.4V to 0.4V	1		4	1		4	V/ns
t_D	Duty Cycle	Measured on rising and falling edge at 1.5V	45		55	45		55	%
t_{JC}	Jitter, Cycle-to-Cycle	Measured on rising edge at 1.5V. Maximum difference of cycle time between two adjacent cycles.			250			250	ps
t_{SK}	Output Skew	Measured on rising edge at 1.5V			250			250	ps
f_{ST}	Frequency Stabilization from Power-up (cold start)	Assumes full supply voltage reached within 1 ms from power-up. Short cycles exist prior to frequency stabilization.			3			3	ms
Z_o	AC Output Impedance	Average value during switching transition. Used for determining series termination value.	15	20	30	15	20	30	Ω

3.3V AC Electrical Characteristics (CPU3.3#_2.5 Input = 0) (continued)

SDRAM Clock Outputs, SDRAM0:11 (Lump Capacitance Test Load = 30 pF)

Parameter	Description	Test Condition/Comments	CPU = 66.8 MHz			CPU = 60 MHz			Unit
			Min.	Typ.	Max.	Min.	Typ.	Max.	
t_P	Period	Measured on rising edge at 1.5V	15			16.7			ns
f	Frequency, Actual	Determined by PLL divider ratio		66.8			59.876		MHz
t_R	Output Rise Edge Rate	Measured from 0.4V to 2.4V	1		4	1		4	V/ns
t_F	Output Fall Edge Rate	Measured from 2.4V to 0.4V	1		4	1		4	V/ns
t_D	Duty Cycle	Measured on rising and falling edge at 1.5V	45		55	45		55	%
t_{JC}	Jitter, Cycle-to-Cycle	Measured on rising edge at 1.5V. Maximum difference of cycle time between two adjacent cycles.			250			250	ps
t_{SK}	Output Skew	Measured on rising edge at 1.5V		100			100		ps
t_{SK}	CPU to SDRAM Clock Skew	Covers all CPU/SDRAM outputs. Measured on rising edge at 1.5V.			500			500	ps
f_{ST}	Frequency Stabilization from Power-up (cold start)	Assumes full supply voltage reached within 1 ms from power-up. Short cycles exist prior to frequency stabilization.			3			3	ms
Z_o	AC Output Impedance	Average value during switching transition. Used for determining series termination value.	10	15	20	10	15	20	Ω

PCI Clock Outputs, PCI_F and PCI0:5 (Lump Capacitance Test Load = 30 pF)

Parameter	Description	Test Condition/Comments	CPU = 66.8 MHz			CPU = 60 MHz			Unit
			Min.	Typ.	Max.	Min.	Typ.	Max.	
t_P	Period	Measured on rising edge at 1.5V	30			33.3			ns
f	Frequency, Actual	Determined by PLL divider ratio		33.4			29.938		MHz
t_H	High Time	Duration of clock cycle above 2.4V	12			13.3			ns
t_L	Low Time	Duration of clock cycle below 0.4V	12			13.3			ns
t_R	Output Rise Edge Rate	Measured from 0.4V to 2.4V	1		4	1		4	V/ns
t_F	Output Fall Edge Rate	Measured from 2.4V to 0.4V	1		4	1		4	V/ns
t_D	Duty Cycle	Measured on rising and falling edge at 1.5V	45		55	45		55	%
t_{JC}	Jitter, Cycle-to-Cycle	Measured on rising edge at 1.5V. Maximum difference of cycle time between two adjacent cycles.			250			250	ps
t_{SK}	Output Skew	Measured on rising edge at 1.5V			250			250	ps
t_O	CPU to PCI Clock Skew	Covers all CPU/PCI outputs. Measured on rising edge at 1.5V. CPU leads PCI output.	1		4	1		4	ns
f_{ST}	Frequency Stabilization from Power-up (cold start)	Assumes full supply voltage reached within 1 ms from power-up. Short cycles exist prior to frequency stabilization.			3			3	ms
Z_o	AC Output Impedance	Average value during switching transition. Used for determining series termination value.	15	20	30	15	20	30	Ω

3.3V AC Electrical Characteristics (CPU3.3#_2.5 Input = 0) (continued)

IOAPIC Clock Output (Lump Capacitance Test Load = 20 pF)

Parameter	Description	Test Condition/Comments	CPU = 60/66.8 MHz			Unit
			Min.	Typ.	Max.	
f	Frequency, Actual	Frequency generated by crystal oscillator		14.31818		MHz
t_R	Output Rise Edge Rate	Measured from 0.4V to 2.4V	1		4	V/ns
t_F	Output Fall Edge Rate	Measured from 2.4V to 0.4V	1		4	V/ns
t_D	Duty Cycle	Measured on rising and falling edge at 1.5V	45		55	%
f_{ST}	Frequency Stabilization from Power-up (cold start)	Assumes full supply voltage reached within 1 ms from power-up. Short cycles exist prior to frequency stabilization.			1.5	ms
Z_o	AC Output Impedance	Average value during switching transition. Used for determining series termination value.	8	12	15	Ω

REF0 Clock Output (Lump Capacitance Test Load = 45 pF)

Parameter	Description	Test Condition/Comments	CPU = 60/66.8 MHz			Unit
			Min.	Typ.	Max.	
f	Frequency, Actual	Frequency generated by crystal oscillator		14.31818		MHz
t_R	Output Rise Edge Rate	Measured from 0.4V to 2.4V	1		4	V/ns
t_F	Output Fall Edge Rate	Measured from 2.4V to 0.4V	1		4	V/ns
t_D	Duty Cycle	Measured on rising and falling edge at 1.5V	40		60	%
f_{ST}	Frequency Stabilization from Power-up (cold start)	Assumes full supply voltage reached within 1 ms from power-up. Short cycles exist prior to frequency stabilization.			1.5	ms
Z_o	AC Output Impedance	Average value during switching transition. Used for determining series termination value.	17	20	25	Ω

REF1 Clock Output (Lump Capacitance Test Load = 20 pF)

Parameter	Description	Test Condition/Comments	CPU = 60/66.8 MHz			Unit
			Min.	Typ.	Max.	
f	Frequency, Actual	Frequency generated by crystal oscillator		14.31818		MHz
t_R	Output Rise Edge Rate	Measured from 0.4V to 2.4V	1		4	V/ns
t_F	Output Fall Edge Rate	Measured from 2.4V to 0.4V	1		4	V/ns
t_D	Duty Cycle	Measured on rising and falling edge at 1.5V	40		55	%
f_{ST}	Frequency Stabilization from Power-up (cold start)	Assumes full supply voltage reached within 1 ms from power-up. Short cycles exist prior to frequency stabilization.			1.5	ms
Z_o	AC Output Impedance	Average value during switching transition. Used for determining series termination value.	20	25	35	Ω

3.3V AC Electrical Characteristics (CPU3.3#_2.5 Input = 0) (continued)

48-/24-MHZ Clock Outputs (Lump Capacitance Test Load = 20 pF)

Parameter	Description	Test Condition/Comments	CPU = 60/66.8 MHz			Unit
			Min.	Typ.	Max.	
f	Frequency, Actual	Determined by PLL divider ratio (see n/m below)	48.008/24.004			MHz
f_D	Deviation from 48 MHz	(48.008 – 48)/48	+167			ppm
m/n	PLL Ratio	(14.31818 MHz x 57/17 = 48.008 MHz)	57/17			
t_R	Output Rise Edge Rate	Measured from 0.4V to 2.4V	1		4	V/ns
t_F	Output Fall Edge Rate	Measured from 2.4V to 0.4V	1		4	V/ns
t_D	Duty Cycle	Measured on rising and falling edge at 1.5V	40		55	%
t_{JC}	Jitter, Cycle-to-Cycle	Measured on rising edge at 1.5V. Maximum difference of cycle time between two adjacent cycles.			500	ps
f_{ST}	Frequency Stabilization from Power-up (cold start)	Assumes full supply voltage reached within 1 ms from power-up. Short cycles exist prior to frequency stabilization.			3	ms
Z_o	AC Output Impedance	Average value during switching transition. Used for determining series termination value.	15	20	30	Ω

Serial Input Port

Parameter	Description	Test Condition	Min.	Typ.	Max.	Unit
f_{SCLOCK}	SCLOCK Frequency	Normal Mode	0		100	kHz
t_{STHD}	Start Hold Time		4.0			µs
t_{LOW}	SCLOCK Low Time		4.7			µs
t_{HIGH}	SCLOCK High Time		4.0			µs
t_{DSU}	Data Setup Time		250			ns
t_{DHD}	Data Hold Time	(Transmitter should provide a 300-ns hold time to ensure proper timing at the receiver.)	0			ns
t_R	Rise Time, SDATA and SCLOCK	From $0.3V_{DD}$ to $0.7V_{DD}$			1000	ns
t_F	Fall Time, SDATA and SCLOCK	From $0.7V_{DD}$ to $0.3V_{DD}$			300	ns
t_{STSU}	Stop Setup Time		4.0			µs
t_{SPF}	Bus Free Time between Stop and Start Condition		4.7			µs
t_{SP}	Allowable Noise Spike Pulse Width				50	ns

2.5V AC Electrical Characteristics (CPU3.3#_2.5 Input = 1)

T_A = 0°C to +70°C, VDD1:3 = 3.3V±5% (3.135–3.465V), VDDL1:2 = 2.5V±5% (2.375–2.625V), f_{XTL} = 14.31818 MHz
Spread Spectrum function turned off

AC clock parameters are tested and guaranteed over stated operating conditions using the stated lump capacitive load at the clock output.

CPU Clock Outputs, CPU0:3 (Lump Capacitance Test Load = 20 pF)

Parameter	Description	Test Condition/Comments	CPU = 66.8 MHz			CPU = 60 MHz			Unit
			Min.	Typ.	Max.	Min.	Typ.	Max.	
t_P	Period	Measured on rising edge at 1.25V	15			16.7			ns
f	Frequency, Actual	Determined by PLL divider ratio		66.8			59.876		MHz
t_H	High Time	Duration of clock cycle above 2.0V	5.2			6			ns
t_L	Low Time	Duration of clock cycle below 0.4V	5			5.8			ns
t_R	Output Rise Edge Rate	Measured from 0.4V to 2.0V	0.8		3	0.8		3	V/ns
t_F	Output Fall Edge Rate	Measured from 2.0V to 0.4V	0.8		3	0.8		3	V/ns
t_D	Duty Cycle	Measured on rising and falling edge at 1.25V	45		55	45		55	%
t_{JC}	Jitter, Cycle-to-Cycle	Measured on rising edge at 1.25V. Maximum difference of cycle time between two adjacent cycles.			250			250	ps
t_{SK}	Output Skew	Measured on rising edge at 1.25V			250			250	ps
f_{ST}	Frequency Stabilization from Power-up (cold start)	Assumes full supply voltage reached within 1 ms from power-up. Short cycles exist prior to frequency stabilization.			3			3	ms
Z_o	AC Output Impedance	Average value during switching transition. Used for determining series termination value.	12	20	30	12	20	30	Ω

IOAPIC Clock Output (Lump Capacitance Test Load = 20 pF)

Parameter	Description	Test Condition/Comments	CPU = 60/66.8 MHz			Unit
			Min.	Typ.	Max.	
f	Frequency, Actual	Frequency generated by crystal oscillator		14.31818		MHz
t_R	Output Rise Edge Rate	Measured from 0.4V to 2.0V	1		4	V/ns
t_F	Output Fall Edge Rate	Measured from 2.0V to 0.4V	1		4	V/ns
t_D	Duty Cycle	Measured on rising and falling edge at 1.25V	45		55	%
f_{ST}	Frequency Stabilization from Power-up (cold start)	Assumes full supply voltage reached within 1 ms from power-up. Short cycles exist prior to frequency stabilization.			1.5	ms
Z_o	AC Output Impedance	Average value during switching transition. Used for determining series termination value.	10	15	25	Ω

Ordering Information

Ordering Code	Freq. Mask Code	Package Name	Package Type
W48S87	04	H	48-pin SSOP (300 mils)

Document #: 38-00859

Package Diagram

48-Pin Small Shrink Outline Package (SSOP, 300 mils)

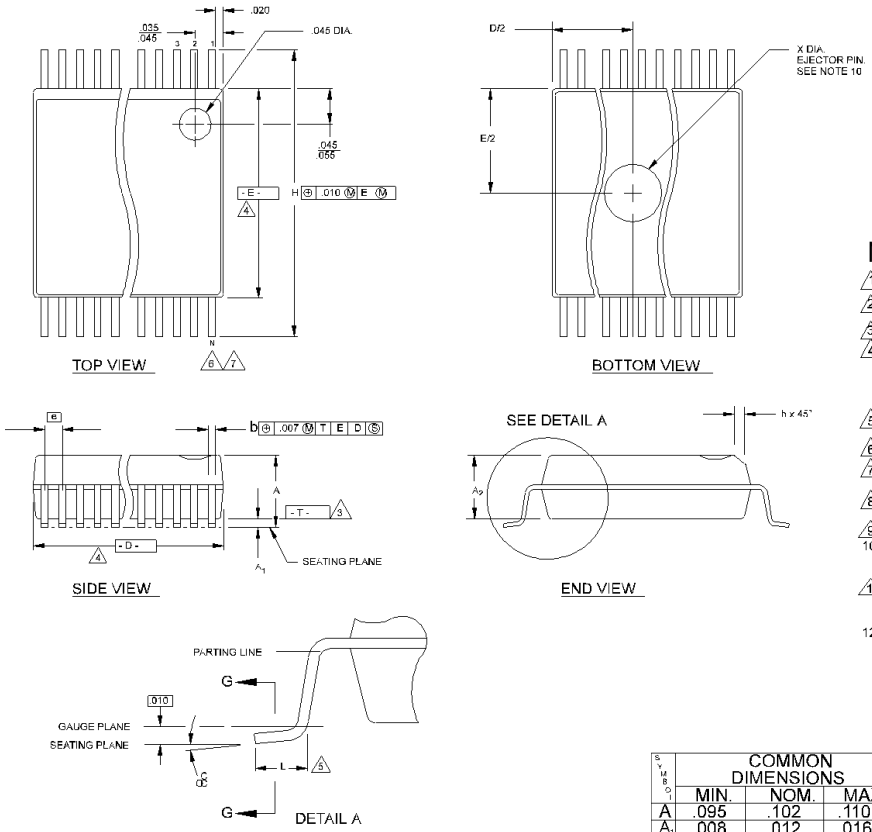

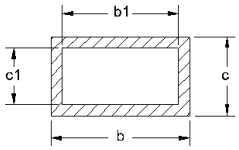

SECTION G-G
SCALE: NONE

NOTES:

1. MAXIMUM DIE THICKNESS ALLOWABLE IS .025.
2. DIMENSIONING & TOLERANCING PER ANSI Y14.5M - 1982.
3. "T" IS A REFERENCE DATUM.
4. "D" & "E" ARE REFERENCE DATUMS AND DO NOT INCLUDE MOLD FLASH OR PROTRUSIONS, BUT DOES INCLUDE MOLD MISMATCH AND ARE MEASURED AT THE MOLD PARTING LINE. MOLD FLASH OR PROTRUSIONS SHALL NOT EXCEED .006 INCHES PER SIDE.
5. "L" IS THE LENGTH OF TERMINAL FOR SOLDERING TO A SUBSTRATE.
6. "N" IS THE NUMBER OF TERMINAL POSITIONS.
7. TERMINAL POSITIONS ARE SHOWN FOR REFERENCE ONLY.
8. FORMED LEADS SHALL BE PLANAR WITH RESPECT TO ONE ANOTHER WITHIN .003 INCHES AT SEATING PLANE.
9. CONTROLLING DIMENSION: INCHES.
10. COUNTRY OF ORIGIN LOCATION AND EJECTOR PIN ON PACKAGE BOTTOM IS OPTIONAL AND DEPENDS ON ASSEMBLY LOCATION.
11. THESE DIMENSIONS APPLY TO THE FLAT SECTION OF THE LEAD BETWEEN .005 INCHES AND .010 INCHES FROM THE LEAD TIPS.
12. THIS PART IS COMPLIANT WITH JEDEC SPECIFICATION MO-118, VARIATIONS AA, AB, EXCEPT CHAMFER DIMENSION h. JEDEC SPECIFICATION FOR h IS .015"/.025".

SYMBOL	COMMON DIMENSIONS MIN.	NOM.	MAX.	NOTE
A	.095	.102	.110	
A_1	.008	.012	.016	
A_2	.088	.090	.092	
b	.008	.010	.0135	
b_1	.008	.010	.012	
c	.005	-	.010	
c_1	.005	.006	.0085	
D	SEE VARIATIONS			4
E	.292	.296	.299	
e	.025 BSC			
H	.400	.406	.410	
h	.010	.013	.016	
L	.024	.032	.040	
N	SEE VARIATIONS			6
X	.085	.093	.100	10
α	0°	5°	8°	

VARIATIONS	4 D MIN.	NOM.	MAX.	6 N
AA	.620	.625	.630	48
AB	.720	.725	.730	56

THIS TABLE IN INCHES

Summary of nominal dimensions in inches:

Body Width: 0.296
Lead Pitch: 0.025
Body Length: 0.625
Body Height: 0.102

SYMBOL	COMMON DIMENSIONS MIN.	NOM.	MAX.	NOTE
A	2.41	2.59	2.79	
A_1	0.20	0.31	0.41	
A_2	2.24	2.29	2.34	
b	0.203	0.254	0.343	
b_1	0.203	0.254	0.305	
c	0.127	-	0.254	
c_1	0.127	0.152	0.216	
D	SEE VARIATIONS			4
E	7.42	7.52	7.59	
e	0.635 BSC			
H	10.16	10.31	10.41	
h	0.25	0.33	0.41	
L	0.61	0.81	1.02	
N	SEE VARIATIONS			6
X	2.16	2.36	2.54	10
α	0°	5°	8°	

VARIATIONS	4 D MIN.	NOM.	MAX.	6 N
AA	15.75	15.88	16.00	48
AB	18.29	18.42	18.54	56

THIS TABLE IN MILLIMETERS

© Cypress Semiconductor Corporation, 1999. The information contained herein is subject to change without notice. Cypress Semiconductor Corporation assumes no responsibility for the use of any circuitry other than circuitry embodied in a Cypress Semiconductor product. Nor does it convey or imply any license under patent or other rights. Cypress Semiconductor does not authorize its products for use as critical components in life-support systems where a malfunction or failure may reasonably be expected to result in significant injury to the user. The inclusion of Cypress Semiconductor products in life-support systems application implies that the manufacturer assumes all risk of such use and in doing so indemnifies Cypress Semiconductor against all charges.

ООО «ЛайфЭлектроникс» “LifeElectronics” LLC

ИНН 7805602321 КПП 780501001 Р/С 40702810122510004610 ФАКБ "АБСОЛЮТ БАНК" (ЗАО) в г.Санкт-Петербурге К/С 30101810900000000703 БИК 044030703

Компания «Life Electronics» занимается поставками электронных компонентов импортного и отечественного производства от производителей и со складов крупных дистрибьюторов Европы, Америки и Азии.

С конца 2013 года компания активно расширяет линейку поставок компонентов по направлению коаксиальный кабель, кварцевые генераторы и конденсаторы (керамические, пленочные, электролитические), за счёт заключения дистрибьюторских договоров

Мы предлагаем:

- *Конкурентоспособные цены и скидки постоянным клиентам.*
- *Специальные условия для постоянных клиентов.*
- *Подбор аналогов.*
- *Поставку компонентов в любых объемах, удовлетворяющих вашим потребностям.*

- *Приемлемые сроки поставки, возможна ускоренная поставка.*
- *Доставку товара в любую точку России и стран СНГ.*
- *Комплексную поставку.*
- *Работу по проектам и поставку образцов.*
- *Формирование склада под заказчика.*

- *Сертификаты соответствия на поставляемую продукцию (по желанию клиента).*
- *Тестирование поставляемой продукции.*
- *Поставку компонентов, требующих военную и космическую приемку.*
- *Входной контроль качества.*
- *Наличие сертификата ISO.*

В составе нашей компании организован Конструкторский отдел, призванный помогать разработчикам, и инженерам.

Конструкторский отдел помогает осуществить:

- *Регистрацию проекта у производителя компонентов.*
- *Техническую поддержку проекта.*
- *Защиту от снятия компонента с производства.*
- *Оценку стоимости проекта по компонентам.*
- *Изготовление тестовой платы монтаж и пусконаладочные работы.*

Тел: +7 (812) 336 43 04 (многоканальный)
Email: org@lifeelectronics.ru

www.lifeelectronics.ru