Copyright FCI.

FCIconnect.com

Configuration of Ducuments

P/N	Documents	No.	Title	CAT.No.
HFW_S-2STE1LF	Speciffication	SC-HFWS03	CONNECTOR USED FOR FPC/FFC WITH 1mm CONTACT SPACING COPING WITH AUTOMATION MOUNTING &SMT	HFW_S-2ST1LF
	Connector dwg.	JSA96464	CAT.NO.TABLE FOR 1mm SPACING SMT CONNECTOR	HFW_S-2ST_LF
		JSA96465	1mm SPACING SURFACE MOUNT FPC/FFC CONNECTOR	HFW_S-2ST_LF
		JSA96466	CAT. NO. TABLE FOR PLASTIC TAPE PACKAGED 1mm SPACING SMT CONN.	HFW_S-2STE1LF
		JSA96467	PLASTIC TAPE PACKAGED 1mm SPACING SMT CONNECTOR	HFW_S-2STE1LF
	Cable dwg.	JSA93588	RECOMMENDED CABLE	HFW_S-2ST_
		JSA93587	RECOMMENDED CABLE	HFW_S-2ST_
HFW_S-2STAE1LF	Speciffication	SC-HFWS06	CONNECTOR USED FOR CIC WITH 1mm CONTACT SPACING COPING WITH AUTOMATIC MOUNTING &SMT	HFW_S-2STAE1LF
	Connector dwg.	JSA97369	CAT.NO.TABLE FOR 1mm SPACING SMT CONNECTOR	HFW_S-2STA_LF
		JSA97370	1mm SPACING SURFACE MOUNT FPC/FFC CONNECTOR	HFW_S-2STA_LF
		JSA97371	CAT. NO. TABLE FOR PLASTIC TAPE PACKAGED 1mm SPACING SMT CONN.	HFW_S-2STAE1LF
		JSA97372	PLASTIC TAPE PACKAGED 1mm SPACING SMT CONNECTOR	HFW_S-2STAE1LF
	Cable dwg.	JSA97373	RECOMMENDED CABLE	HFW_S-2STA_
HFW_S-2STBE1LF	Speciffication	SC-HFWS06	CONNECTOR USED FOR CIC WITH 1mm CONTACT SPACING COPING WITH AUTOMATIC MOUNTING &SMT	HFW_S-2STBE1LF
	Connector dwg.	JSA97359	CAT.NO.TABLE FOR 1mm SPACING SMT CONNECTOR	HFW_S-2STB_LF
		JSA97360	1mm SPACING SURFACE MOUNT FPC/FFC CONNECTOR	HFW_S-2STB_LF
		JSA97361	CAT. NO. TABLE FOR PLASTIC TAPE PACKAGED 1mm SPACING SMT CONN.	HFW_S-2STBE1LF
		JSA97362	PLASTIC TAPE PACKAGED 1mm SPACING SMT CONNECTOR	HFW_S-2STBE1LF
	Cable dwg.	JSA97363	RECOMMENDED CABLE	HFW_S-2STB_
HFW_S-6STE1LF	Speciffication	SC-HFWS04	CONNECTOR USED FOR CIC WITH 1mm CONTACT SPACING COPING WITH AUTOMATIC MOUNTING &SMT	HFW_S-6STE1LF
	Connector dwg.	JSA96468	CAT.NO.TABLE FOR 1mm SPACING SMT CONNECTOR	HFW_S-6ST_LF
		JSA96469	1mm SPACING SURFACE MOUNT CIC CONNECTOR	HFW_S-6ST_LF
		JSA96470	CAT. NO. TABLE FOR PLASTIC TAPE PACKAGED 1mm SPACING SMT CONN.	HFW_S-6STE1LF
		JSA96471	PLASTIC TAPE PACKAGED 1mm SPACING SMT CONNECTOR	HFW_S-6STE1LF
	Cable dwg.	JSA93944	RECOMMENDED CABLE	HFW_S-6ST_

ltr	ecn no	dr	date
A	J05-0334	H.T	6/3/'05
B	J06-0435	H.T	10/26/'06
C	J07-0481	H.T	2007-9-26
D	J07-0502	H.T	2007-10-10

dr	H.T	2007-10-10
engr	[illegible]	2007-10-10
chr	R. Stewart	2007-10-10
appd	S. Andrews	2007-10-10

mat'l. code

surface 58 √

tolerances unless otherwise specified: ISO 1302 / ISO 406 / ISO 1101

angles

linear

tolerance

projection

mm

scale 2:1

product family: 580F

CODE JP

title: HFW_S Documents Configuration (1mm Contact Spacing connector)

dwg no: JSA96472

sheet 1 of 1

size A4

type: Product Customer Drawing

Rev D

sheet index: sheet 1 revision D

form: A4

PDM: Rev:D STATUS:Released Printed: Jan 24, 2010

CAT. NO. & DIMENSIONS

(NOTE3)	NO. OF CONTACTS (n)	CAT. NO.	DIMENSIONS (NOTE2)				
			A ±0.2	B ±0.2	C±0.2	D±0.2	E ±0.2
	4	HFW4S-6ST__LF	7	5.14	3	—	—
	5	HFW5S-6ST__LF	8	6.14	4	—	—
	6	HFW6S-6ST__LF	9	7.14	5	—	—
	7	HFW7S-6ST__LF	10	8.14	6	—	—
	8	HFW8S-6ST__LF	11	9.14	7	—	—
	9	HFW9S-6ST__LF	12	10.14	8	0.35	7.3
	10	HFW10S-6ST__LF	13	11.14	9	0.35	8.3
	11	HFW11S-6ST__LF	14	12.14	10	1.35	7.3
	12	HFW12S-6ST__LF	15	13.14	11	1.35	8.3
	13	HFW13S-6ST__LF	16	14.14	12	2.35	7.3
	14	HFW14S-6ST__LF	17	15.14	13	2.35	8.3
	15	HFW15S-6ST__LF	18	16.14	14	3.35	7.3
	16	HFW16S-6ST__LF	19	17.14	15	3.35	8.3
	17	HFW17S-6ST__LF	20	18.14	16	4.35	7.3
	18	HFW18S-6ST__LF	21	19.14	17	4.35	8.3
	19	HFW19S-6ST__LF	22	20.14	18	5.35	7.3
	20	HFW20S-6ST__LF	23	21.14	19	5.35	8.3
	21	HFW21S-6ST__LF	24	22.14	20	6.35	7.3
	22	HFW22S-6ST__LF	25	23.14	21	6.35	8.3
	23	HFW23S-6ST__LF	26	24.14	22	7.35	7.3
	24	HFW24S-6ST__LF	27	25.14	23	7.35	8.3
	25	HFW25S-6ST__LF	28	26.14	24	8.35	7.3
	26	HFW26S-6ST__LF	29	27.14	25	8.35	8.3
	27	HFW27S-6ST__LF	30	28.14	26	9.35	7.3
	28	HFW28S-6ST__LF	31	29.14	27	9.35	8.3
	29	HFW29S-6ST__LF	32	30.14	28	10.35	7.3
	30	HFW30S-6ST__LF	33	31.14	29	10.35	8.3
*	31	HFW31S-6ST__LF	34	32.14	30	11.35	7.3
	32	HFW32S-6ST__LF	35	33.14	31	11.35	8.3
*	33	HFW33S-6ST__LF	36	34.14	32	12.35	7.3

CAT. NO.

HFW (n) S – 6 ST ___ LF

- SERIES — HFW
- NO. OF CONTACTS — (n)
- STRAIGHT TYPE — S
- FOR CIC — 6
- FOR AUTOMATIC MOUNTING (SMT) — ST
- PACKAGE STYLE — ___
- LEAD FREE — LF

NOTES

1. THIS PRODUCT IS THE CONNECTOR DSIGNED TO TERMINATE CIC AND COPES WITH AUTOMATIC MOUNTING (SMT).
2. SEE PART DRAWINGS FOR DIMENSIONS A~E.
3. PLEASE CONSULT US IN CASE OF USING PARTS WITH * MARK.

ltr	ecn no	dr	date
A	J05-0334	H.T	6/3/'05
B	J06-0435	H.T	10/26/'06

mat'l. code | surface 58 ISO 1302 | tolerance ISO 406 ISO 1101 | tolerances unless otherwise specified | angles | linear | projection | mm | scale ∝

dr | engr | chr | appd

product family 580F | CODE JP

title: CAT. NO. TABLE FOR 1mm SPACING SMT CONNECTOR (CAT.No.HFW__S-6ST__LF)

dwg no JSA 96468 | sheet 1 of 1 | size A4

type Product Customer Drawing

sheet index | revision B | sheet 1 | Rev. B

SC-HFWS04 JSA96469 96470 96471 93944
form: A4

Copyright FCI.

FCIconnect.com

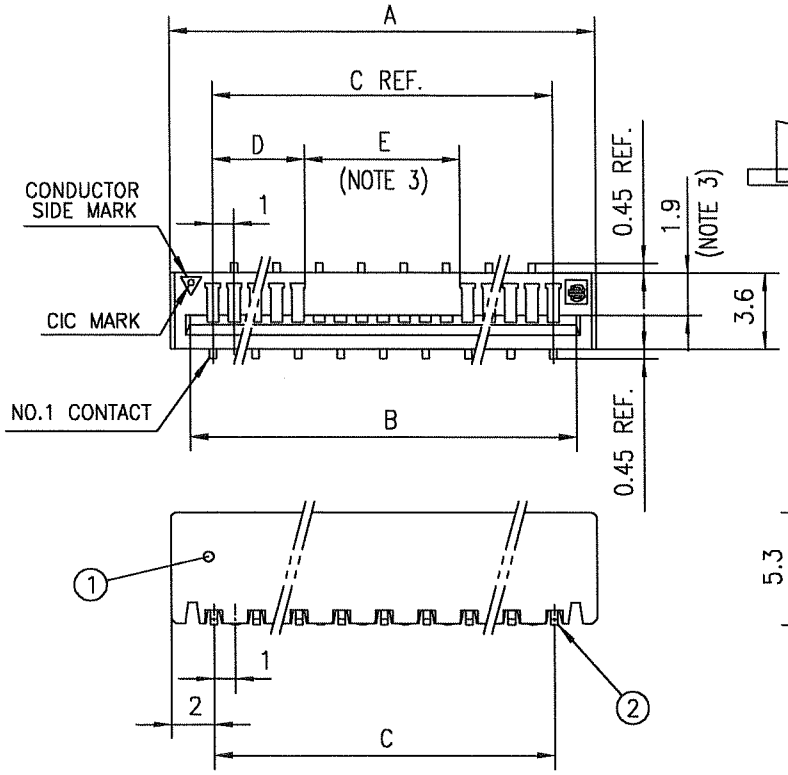

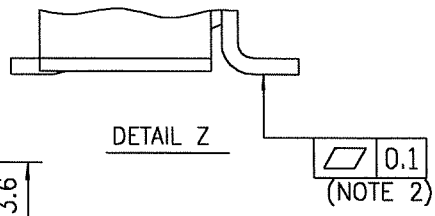

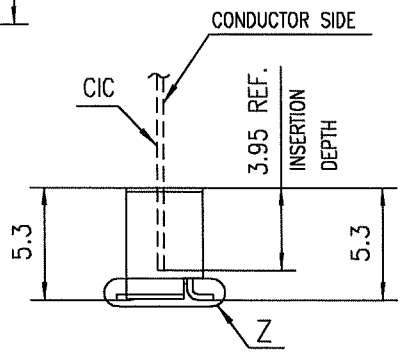

PT. NO.	PARTS NAME	MATERIAL	Q'TY	NOTE
1	HOUSING	PA6T RESIN GLASS REINFORCED (UL94V-0)	1	COLOR : BLACK
2	CONTACT	PHOSPHOR BRONZE	n	Ni UNDER Sn PLATING (LEAD FREE)

n : NO. OF CONTACTS

RECOMMENDED PC BOARD LAYOUT
(COMPONENT SIDE)

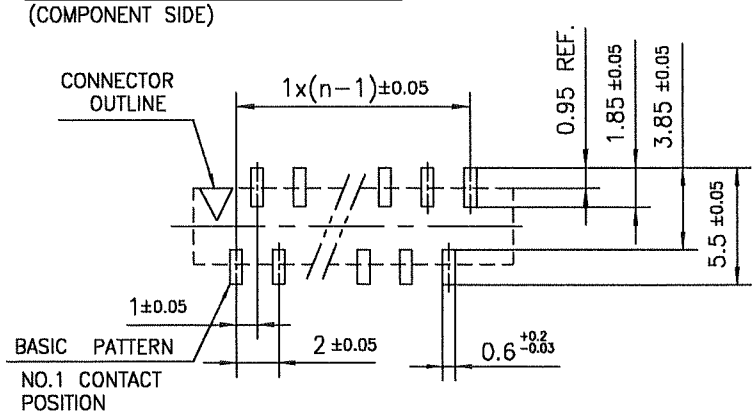

NOTES

1. THIS PRODUCT IS THE CONNECTOR DSIGNED TO TERMINATE CIC AND COPES WITH AUTOMATIC MOUNTING (SMT).
2. FLATNESS OF CONTACT TERMINAL MUST BE WITHIN TOLERANCE IN Z PORTION DETAILED DRAWING.
3. THIS DIMENSION IS SPACE FOR THE NOZZLE OF MOUNTER.
4. THIS PRODUCT MEETS EUROPEAN UNION DIRECTIVES AND OTHER COUNTRY REGULATIONS AS DESCRIBED IN GS-22-008
5. THE HOUSING WILL WITHSTAND EXPOSURE TO 260°C PEAK TEMPERATURE FOR 10 SECONDS IN A REFLOW SOLDERING OVEN.

mat'l. code				surface 58 ISO 1302	tolerance ISO 406 ISO 1101	projection	product family 580F / CODE JP
ltr	ecn no	dr	date	tolerances unless otherwise specified			title
A	J05-0334	H.T	6/3/'05	angles	linear ±0.2	mm	1mm SPACING SURFACE MOUNT CIC CONNECTOR (CAT.No.HFW__S-6ST__LF)
B	J05-0731	H.T	10/28/'05				
C	J06-0435	H.T	10/26/'06			scale 2	
				dr	H. Takahashi	10/26/'06	dwg no JSA 96469 / sheet 1 of 1 / size A4
				engr	H. Takahashi	10/26/'06	
				chr	K. Shoji	10/26/'06	
				appd	S. Nudano	10/27/'06	type Product Customer Drawing
sheet index	revision sheet	C 1					Rev. C

SC-HFWS04 JSA96468
form: A4

FCIconnect.com
Copyright FCI.

CAT. NO. & DIMENSIONS

(NOTE4)	NO. OF CONTACTS (n)	CAT. NO. (NOTE2)	DIMENSIONS (NOTE3)		
			F ± 5	G ±0.3	H ±0.1
	4	HFW4S-6STE1LF	28.4	24	—
	5	HFW5S-6STE1LF	28.4	24	—
	6	HFW6S-6STE1LF	28.4	24	—
	7	HFW7S-6STE1LF	28.4	24	—
	8	HFW8S-6STE1LF	28.4	24	—
	9	HFW9S-6STE1LF	28.4	24	—
	10	HFW10S-6STE1LF	28.4	24	—
	11	HFW11S-6STE1LF	28.4	24	—
	12	HFW12S-6STE1LF	28.4	24	—
	13	HFW13S-6STE1LF	28.4	24	—
	14	HFW14S-6STE1LF	36.4	32	28.4
	15	HFW15S-6STE1LF	36.4	32	28.4
	16	HFW16S-6STE1LF	36.4	32	28.4
	17	HFW17S-6STE1LF	36.4	32	28.4
	18	HFW18S-6STE1LF	48.4	44	40.4
	19	HFW19S-6STE1LF	48.4	44	40.4
	20	HFW20S-6STE1LF	48.4	44	40.4
	21	HFW21S-6STE1LF	48.4	44	40.4
	22	HFW22S-6STE1LF	48.4	44	40.4
	23	HFW23S-6STE1LF	48.4	44	40.4
	24	HFW24S-6STE1LF	48.4	44	40.4
	25	HFW25S-6STE1LF	48.4	44	40.4
	26	HFW26S-6STE1LF	48.4	44	40.4
	27	HFW27S-6STE1LF	48.4	44	40.4
	28	HFW28S-6STE1LF	48.4	44	40.4
	29	HFW29S-6STE1LF	60.4	56	52.4
	30	HFW30S-6STE1LF	60.4	56	52.4
*	31	HFW31S-6STE1LF	60.4	56	52.4
	32	HFW32S-6STE1LF	60.4	56	52.4
*	33	HFW33S-6STE1LF	60.4	56	52.4

CAT. NO.

HFW (n) S – 6 ST E1 LF

- HFW — SERIES
- (n) — NO. OF CONTACTS
- S — STRAIGHT TYPE
- 6 — FOR CIC
- ST — FOR AUTOMATIC MOUNTING (SMT)
- E1 — PACKAGE STYLE
- LF — LEAD FREE

NOTES

1. THIS PRODUCT IS THE CONNECTOR DSIGNED TO TERMINATE CIC AND COPES WITH AUTOMATIC MOUNTING (SMT).
2. THIS CATALOG NO. INDICATES PLASTIC TAPE PACKAGED CONNECTOR.
3. SEE PART DRAWINGS FOR DIMENSIONS F~G.
4. PLEASE CONSULT US IN CASE OF USING PARTS WITH * MARK.

FCIconnect.com
Copyright FCI.

mat'l. code				surface 58 ISO 1302	tolerance ISO 406 ISO 1101	projection	product family 580F	CODE JP
ltr	ecn no	dr	date	tolerances unless otherwise specified			title	
A	J05-0334	H.T	6/3/'05	angles	linear	mm	CAT. NO. TABLE FOR PLASTIC TAPE PACKAGED 1mm SPACING SMT CONN. (CAT.No. HFW__S-6STE1LF)	
B	J06-0435	H.T	10/26/'06			scale X		
				dr	10/26/'06	FCI	dwg no JSA 96470	sheet 1 of 1 size A4
				engr	10/26/'06			
				chr	10/26/'06			
				appd	10/27/'06		type Product Customer Drawing	

sheet index	revision sheet	B 1	Rev. B

SC-HFW__S 04 JSA9646B 96471
form: A4

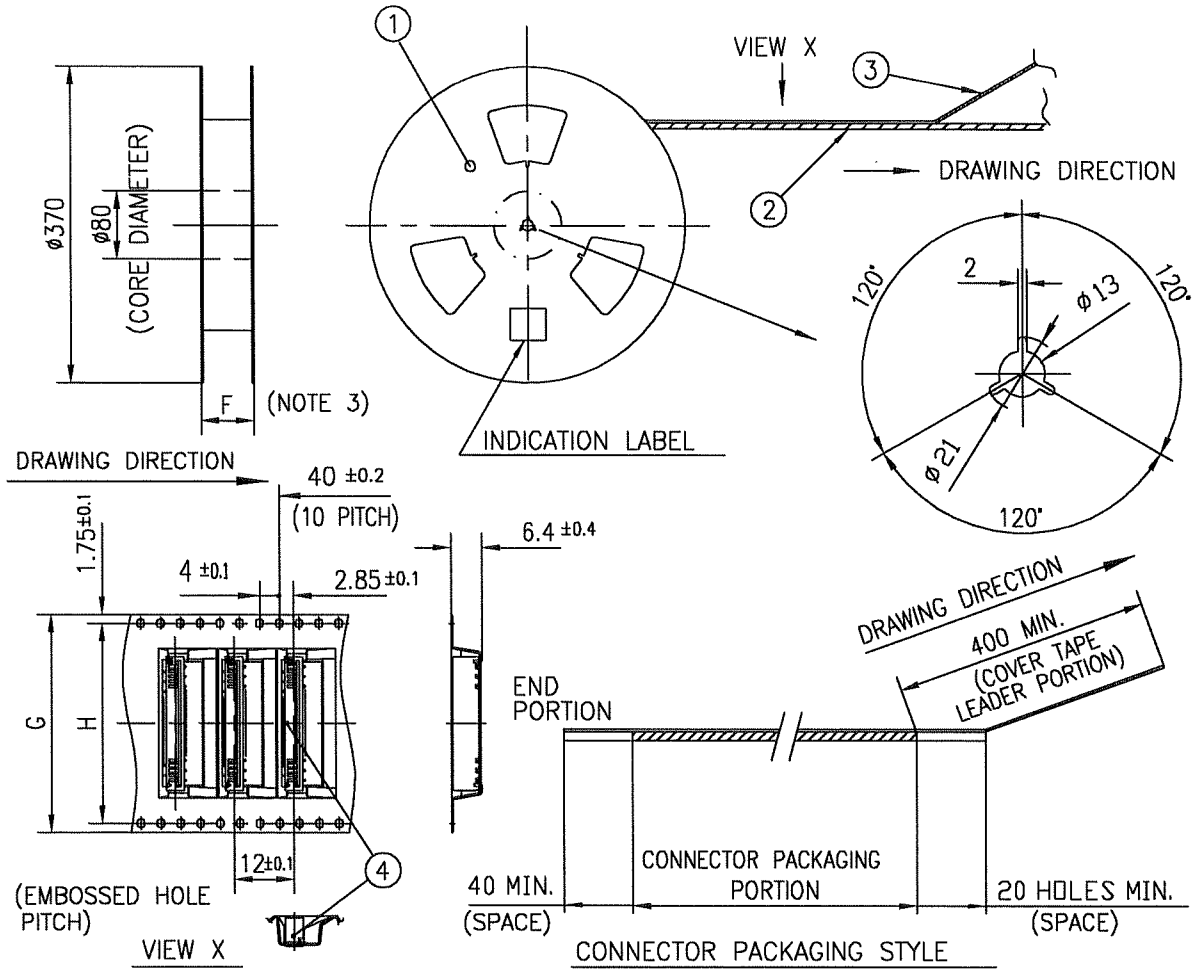

PT. NO.	PARTS NAME	CAT. NO.	MATERIAL	Q'TY	NOTE
1	REEL	———	CARDBOARD	1	COLOR:GRAY
2	PLASTIC (EMBOSSED) TAPE	———	PET	——	COLOR:TRANSPARENCY
3	COVER	———	POLYESTER	——	COLOR:TRANSPARENCY
4	CONNECTOR	HFW__S-6ST__LF	SEE ATTACHED DWG.	1000	———

NOTES

1. THIS IS PLASTIC TAPE PACKAGED CONNECTOR USED FOR CIC AND COPES WITH AUTOMATIC MOUNTING (SMT).
2. SEE JIS C 0806 (PACKING OF ELECTRONIC COMPONENTS ON CONTINUOUS TAPES (SURFACE MOUNTING DEVICES)) FOR SHAPE AND DIMENSIONS OF PLASTIC (EMBOSSED) TAPE AND REEL.
3. F DIMENSION IS PORTION OF THE CORE.

ltr	ecn no	dr	date
A	J05-0334	H.T	6/3/'05
B	J06-0435	H.T	10/26/'06

mat'l. code

surface 58 ISO 1302

tolerance ISO 406 ISO 1101

tolerances unless otherwise specified: angles ±5°; linear ±5

projection

mm

scale X

dr 10/26/06
engr 10/26/06
chr 10/26/06
appd 10/27/06

product family 580F

CODE JP

title PLASTIC TAPE PACKAGED 1mm SPACING SMT CONNECTOR (CAT.No.HFW__S-6STE1LF)

dwg no JSA 96471

sheet 1 of 1

size A4

type Product Customer Drawing

sheet index | revision B | sheet 1

Rev. B

SC-HFWS 04 JSA9646B 96470
form: A4

FCIconnect.com
Copyright FCI.

RECOMMENDED CABLE (CIC)

n : NO. OF CONDUCTOR

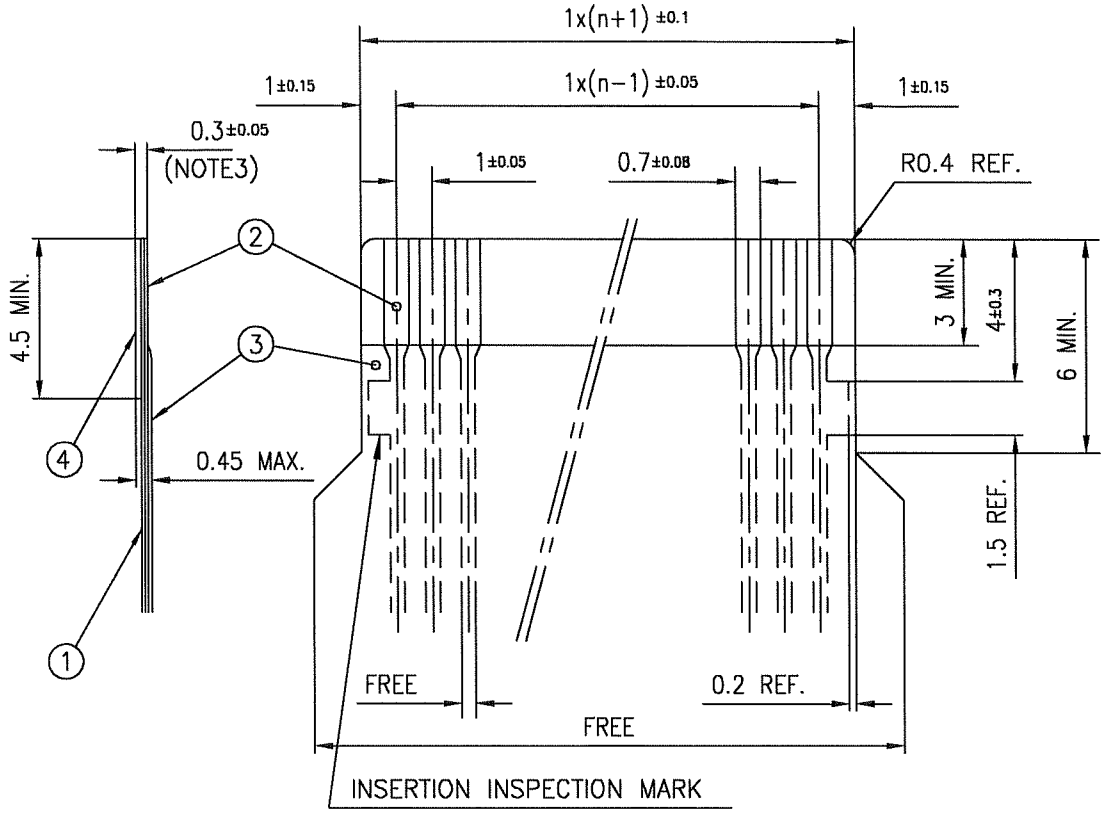

PT. NO.	PARTS NAME	MATERIAL	THICKNESS (μm)	
1	BASE FILM	POLYESTER OR EQUAL	75	25
2	CONDUCTOR	CARBON PASTE OVER SILVER PASTE	10 MIN.	
3	OVERLAY	POLYIMIDE OR POLYESTER OR EQUAL	———	
4	SUPPORTING TAPE	POLYESTER OR POLYIMIDE OR EQUAL	188	250

NOTES

1. NO BURR AT EACH PORTION.
2. NO PEELING IN COMMON USE.
3. TOTAL THICKNESS LIMIT OF EACH MATERIAL (INCLUDING ADHESIVE AGENT) IS SPECIFIED.

FCIconnect.com

Copyright FCI.

ltr	ecn no	dr	date
AA	J04-0334	H.T	Oct.13,'04
AB	J06-0435	H.T	10/26/'06

mat'l. code

surface 58 ISO 1302

tolerance ISO 406 ISO 1101

tolerances unless otherwise specified: angles, linear

projection

mm

scale X

dr 10/26/06

engr 10/26/06

chr R. Shoji 10/26/06

appd S. Nudaui 10/27/06

product family 580F

CODE JP

title RECOMMENDED CABLE (CAT.No.HFW__S-6ST__)

dwg no JSA 93944

sheet 1 of 1

size A4

type Product Customer Drawing

sheet index	revision	AB
	sheet	1

Rev. AB

form: A4

ООО «ЛайфЭлектроникс» “LifeElectronics” LLC

ИНН 7805602321 КПП 780501001 Р/С 40702810122510004610 ФАКБ "АБСОЛЮТ БАНК" (ЗАО) в г.Санкт-Петербурге К/С 30101810900000000703 БИК 044030703

Компания «Life Electronics» занимается поставками электронных компонентов импортного и отечественного производства от производителей и со складов крупных дистрибьюторов Европы, Америки и Азии.

С конца 2013 года компания активно расширяет линейку поставок компонентов по направлению коаксиальный кабель, кварцевые генераторы и конденсаторы (керамические, пленочные, электролитические), за счёт заключения дистрибьюторских договоров

Мы предлагаем:

- *Конкурентоспособные цены и скидки постоянным клиентам.*
- *Специальные условия для постоянных клиентов.*
- *Подбор аналогов.*
- *Поставку компонентов в любых объемах, удовлетворяющих вашим потребностям.*

- *Приемлемые сроки поставки, возможна ускоренная поставка.*
- *Доставку товара в любую точку России и стран СНГ.*
- *Комплексную поставку.*
- *Работу по проектам и поставку образцов.*
- *Формирование склада под заказчика.*

- *Сертификаты соответствия на поставляемую продукцию (по желанию клиента).*
- *Тестирование поставляемой продукции.*
- *Поставку компонентов, требующих военную и космическую приемку.*
- *Входной контроль качества.*
- *Наличие сертификата ISO.*

В составе нашей компании организован Конструкторский отдел, призванный помогать разработчикам, и инженерам.

Конструкторский отдел помогает осуществить:

- *Регистрацию проекта у производителя компонентов.*
- *Техническую поддержку проекта.*
- *Защиту от снятия компонента с производства.*
- *Оценку стоимости проекта по компонентам.*
- *Изготовление тестовой платы монтаж и пусконаладочные работы.*

Тел: +7 (812) 336 43 04 (многоканальный)
Email: org@lifeelectronics.ru

www.lifeelectronics.ru