Not recommended for new designs – Please use 25AA040A or 25LC040A.

25AA040/25LC040/25C040

4K SPI Bus Serial EEPROM

Device Selection Table

Part Number	Vcc Range	Max. Clock Frequency	Temp. Ranges
25AA040	1.8-5.5V	1 MHz	I
25LC040	2.5-5.5V	2 MHz	I
25C040	4.5-5.5V	3 MHz	I,E

Features:

- Low-power CMOS technology:
  - Write current: 3 mA, typical
  - Read current: 500 µA, typical
  - Standby current: 500 nA, typical
- 512 x 8-bit organization
- 16 byte page
- Write cycle time: 5 ms max.
- Self-timed Erase and Write cycles
- Block write protection:
  - Protect none, 1/4, 1/2 or all of array
- Built-in write protection:
  - Power on/off data protection circuitry
  - Write enable latch
  - Write-protect pin
- Sequential read
- High reliability:
  - Endurance: 1M cycles
  - Data retention: > 200 years
  - ESD protection: > 4000V
- 8-pin PDIP, SOIC and TSSOP packages
- Temperature ranges supported:
  - Industrial (I): -40°C to +85°C
  - Automotive (E) (25C040): -40°C to +125°C

Description:

The Microchip Technology Inc. 25AA040/25LC040/25C040 (25XX040*) is a 4 Kbit serial Electrically Erasable PROM. The memory is accessed via a simple Serial Peripheral Interface (SPI) compatible serial bus. The bus signals required are a clock input (SCK) plus separate data in (SI) and data out (SO) lines. Access to the device is controlled through a Chip Select ($\overline{CS}$) input.

*25XX040 is used in this document as a generic part number for the 25AA040/25LC040/25C040 devices.

Communication to the device can be paused via the hold pin ($\overline{HOLD}$). While the device is paused, transitions on its inputs will be ignored, with the exception of Chip Select, allowing the host to service higher priority interrupts. Also, write operations to the device can be disabled via the write-protect pin ($\overline{WP}$).

Package Types

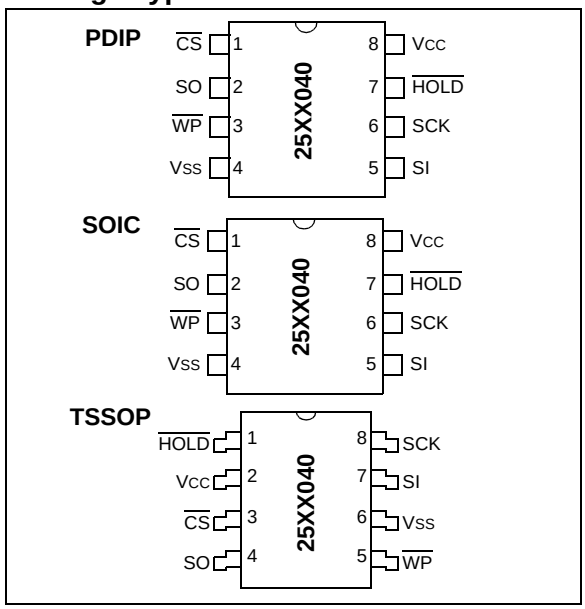

Block Diagram

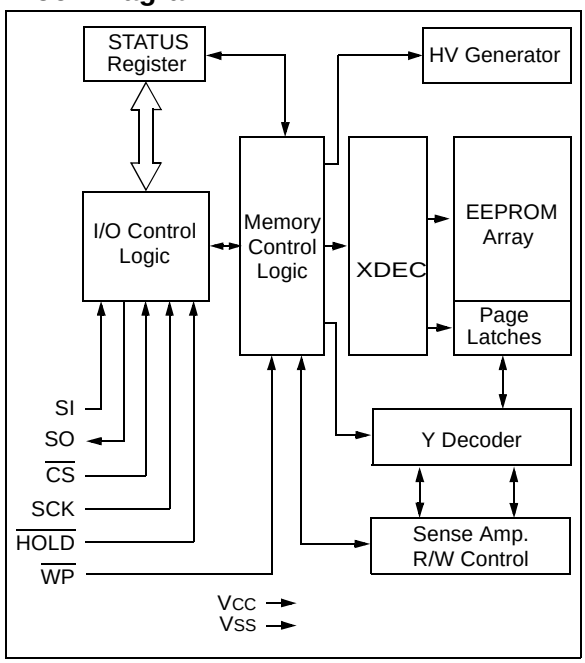

© 2006 Microchip Technology Inc.

1.0 ELECTRICAL CHARACTERISTICS

Absolute Maximum Ratings(†)

V_{CC} 7.0V

All inputs and outputs w.r.t. V_{SS} ..... -0.6V to V_{CC}+1.0V

Storage temperature ..... -65°C to 150°C

Ambient temperature under bias ..... -65°C to 125°C

ESD protection on all pins ..... 4 KV

† **NOTICE:** Stresses above those listed under “Absolute Maximum Ratings” may cause permanent damage to the device. This is a stress rating only and functional operation of the device at those or any other conditions above those indicated in the operational listings of this specification is not implied. Exposure to maximum rating conditions for an extended period of time may affect device reliability

TABLE 1-1: DC CHARACTERISTICS

DC CHARACTERISTICS			Industrial (I): T_A = -40°C to +85°C V_{CC} = 1.8V to 5.5V Automotive (E): T_A = -40°C to +125°C V_{CC} = 4.5V to 5.5V (25C040 only)			
Param. No.	**Sym.**	**Characteristic**	**Min.**	**Max.**	**Units**	**Test Conditions**
D001	V_{IH1}	High-level input voltage	2.0	V_{CC}+1	V	$V_{CC} \geq$ 2.7V **(Note)**
D002	V_{IH2}		0.7 V_{CC}	V_{CC}+1	V	V_{CC}< 2.7V **(Note)**
D003	V_{IL1}	Low-level input voltage	-0.3	0.8	V	$V_{CC} \geq$ 2.7V **(Note)**
D004	V_{IL2}		-0.3	0.3 V_{CC}	V	V_{CC} < 2.7V **(Note)**
D005	V_{OL}	Low-level output voltage	—	0.4	V	I_{OL} = 2.1 mA
D006	V_{OL}		—	0.2	V	I_{OL} = 1.0 mA, V_{CC} < 2.5V
D007	V_{OH}	High-level output voltage	V_{CC} -0.5	—	V	I_{OH} =-400 µA
D008	I_{LI}	Input leakage current	—	±1	µA	$\overline{CS}$ = V_{CC}, V_{IN} = V_{SS} TO V_{CC}
D009	I_{LO}	Output leakage current	—	±1	µA	$\overline{CS}$ = V_{CC}, V_{OUT} = V_{SS} TO V_{CC}
D010	C_{INT}	Internal Capacitance (all inputs and outputs)	—	7	pF	T_A = 25°C, CLK = 1.0 MHz, V_{CC} = 5.0V **(Note)**
D011	I_{CC} Read	Operating Current	— —	1 500	mA µA	V_{CC} = 5.5V; F_{CLK} = 3.0 MHz; SO = Open V_{CC} = 2.5V; F_{CLK} = 2.0 MHz; SO = Open
D012	I_{CC} Write		— —	5 3	mA mA	V_{CC} = 5.5V V_{CC} = 2.5V
D013	I_{CCS}	Standby Current	— —	5 1	µA µA	$\overline{CS}$ = V_{CC} = 5.5V, Inputs tied to V_{CC} or V_{SS} $\overline{CS}$ = V_{CC} = 2.5V, Inputs tied to V_{CC} or V_{SS}

Note: This parameter is periodically sampled and not 100% tested.

© 2006 Microchip Technology Inc.

TABLE 1-2: AC CHARACTERISTICS

AC CHARACTERISTICS			Industrial (I): TA = -40°C to +85°C VCC = 1.8V to 5.5V Automotive (E): TA = -40°C to +125°C VCC = 4.5V to 5.5V (25C040 only)			
Param No.	**Sym.**	**Characteristic**	**Min.**	**Max.**	**Units**	**Test Conditions**
1	FCLK	Clock Frequency	— — —	3 2 1	MHz MHz MHz	VCC = 4.5V to 5.5V VCC = 2.5V to 4.5V VCC = 1.8V to 2.5V
2	TCSS	$\overline{CS}$ Setup Time	100 250 500	— — —	ns ns ns	VCC = 4.5V to 5.5V VCC = 2.5V to 4.5V VCC = 1.8V to 2.5V
3	TCSH	$\overline{CS}$ Hold Time	150 250 475	— — —	ns ns ns	VCC = 4.5V to 5.5V VCC = 2.5V to 4.5V VCC = 1.8V to 2.5V
4	TCSD	$\overline{CS}$ Disable Time	500	—	ns	—
5	TSU	Data Setup Time	30 50 50	— — —	ns ns ns	VCC = 4.5V to 5.5V VCC = 2.5V to 4.5V VCC = 1.8V to 2.5V
6	THD	Data Hold Time	50 100 100	— — —	ns ns ns	VCC = 4.5V to 5.5V VCC = 2.5V to 4.5V VCC = 1.8V to 2.5V
7	TR	CLK Rise Time	—	2	µs	**(Note 1)**
8	TF	CLK Fall Time	—	2	µs	**(Note 1)**
9	THI	Clock High Time	150 230 475	— — —	ns ns ns	VCC = 4.5V to 5.5V VCC = 2.5V to 4.5V VCC = 1.8V to 2.5V
10	TLO	Clock Low Time	150 230 475	— — —	ns ns ns	VCC = 4.5V to 5.5V VCC = 2.5V to 4.5V VCC = 1.8V to 2.5V
11	TCLD	Clock Delay Time	50	—	ns	—
12	TCLE	Clock Enable Time	50	—	ns	—
13	TV	Output Valid from Clock Low	— — —	150 230 475	ns ns ns	VCC = 4.5V to 5.5V VCC = 2.5V to 4.5V VCC = 1.8V to 2.5V
14	THO	Output Hold Time	0	—	ns	**(Note 1)**
15	TDIS	Output Disable Time	— — —	200 250 500	ns ns ns	VCC = 4.5V to 5.5V **(Note 1)** VCC = 2.5V to 4.5V **(Note 1)** VCC = 1.8V to 2.5V **(Note 1)**
16	THS	$\overline{HOLD}$ Setup Time	100 100 200	— — —	ns ns ns	VCC = 4.5V to 5.5V VCC = 2.5V to 4.5V VCC = 1.8V to 2.5V
17	THH	$\overline{HOLD}$ Hold Time	100 100 200	— — —	ns ns ns	VCC = 4.5V to 5.5V VCC = 2.5V to 4.5V VCC = 1.8V to 2.5V
18	THZ	$\overline{HOLD}$ Low to Output High-Z	100 150 200	— — —	ns ns ns	VCC = 4.5V to 5.5V **(Note 1)** VCC = 2.5V to 4.5V **(Note 1)** VCC = 1.8V to 2.5V **(Note 1)**
19	THV	$\overline{HOLD}$ High to Output Valid	100 150 200	— — —	ns ns ns	VCC = 4.5V to 5.5V VCC = 2.5V to 4.5V VCC = 1.8V to 2.5V
20	TWC	Internal Write Cycle Time	—	5	ms	—
21	—	Endurance	1M	—	E/W Cycles	**(Note 2)**

Note 1: This parameter is periodically sampled and not 100% tested.

2: This parameter is not tested but ensured by characterization. For endurance estimates in a specific application, please consult the Total Endurance™ Model which can be obtained from our web site: www.microchip.com.

FIGURE 1-1: HOLD TIMING

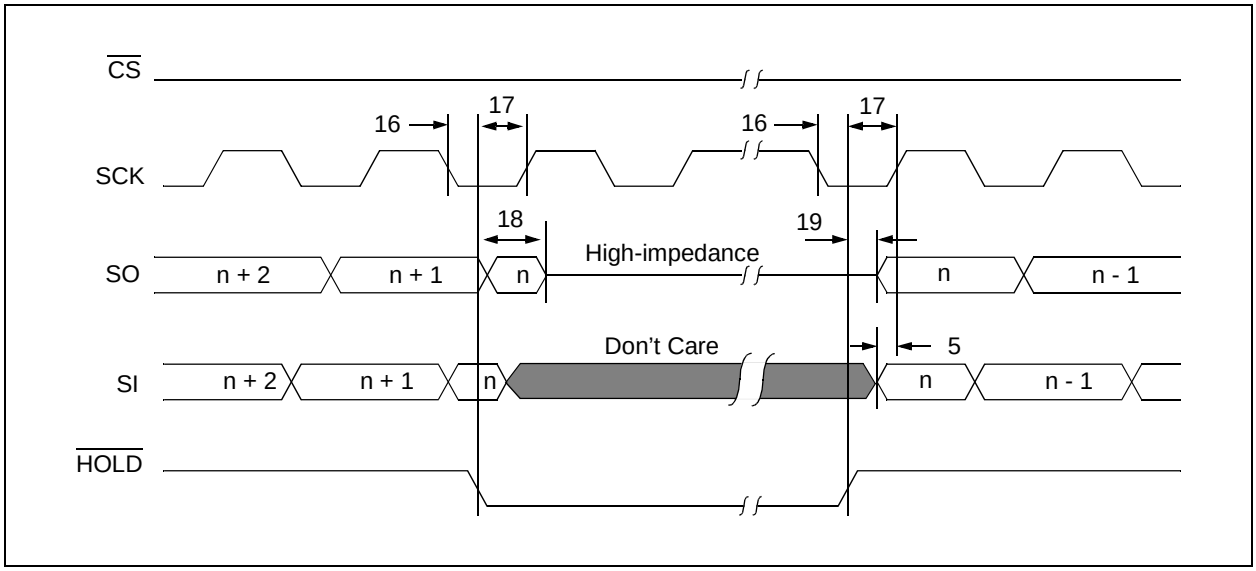

FIGURE 1-2: SERIAL INPUT TIMING

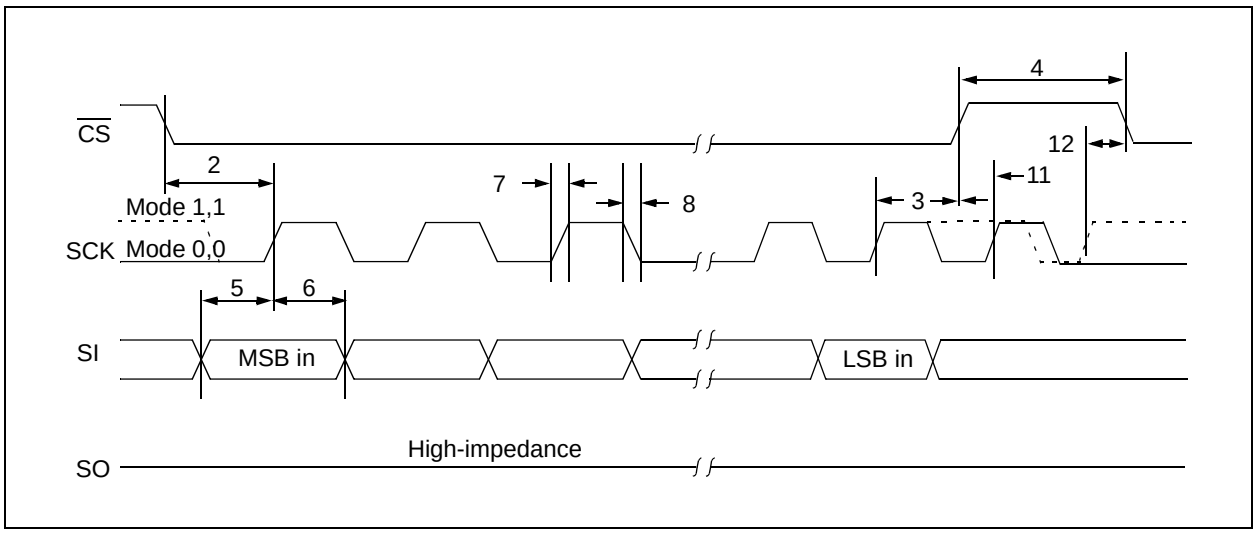

FIGURE 1-3: SERIAL OUTPUT TIMING

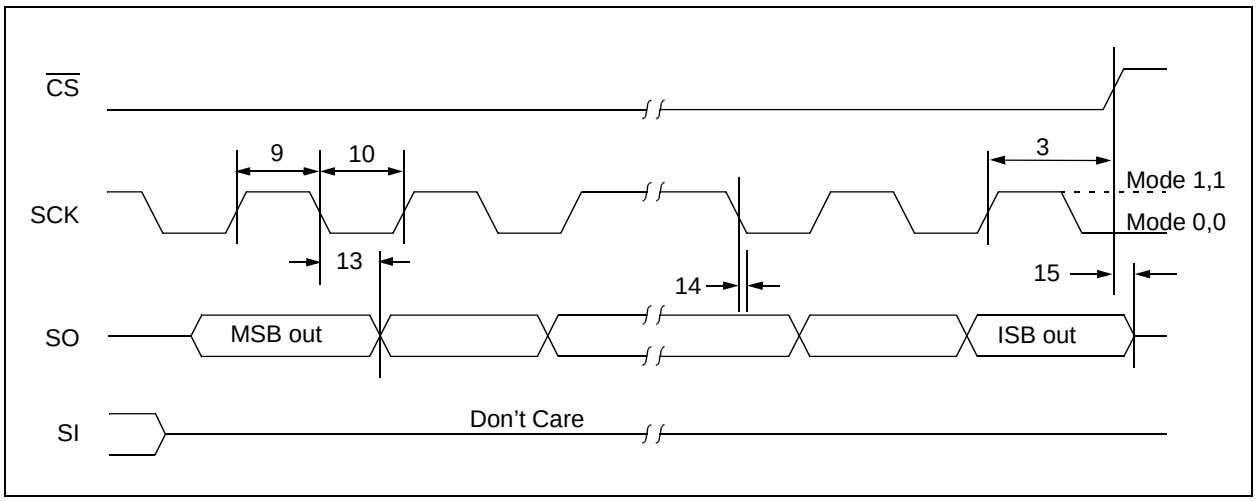

© 2006 Microchip Technology Inc.

TABLE 1-3: AC TEST CONDITIONS

AC Waveform:	
V_{LO} = 0.2V	—
V_{HI} = V_{CC} - 0.2V	**(Note 1)**
V_{HI} = 4.0V	**(Note 2)**
Timing Measurement Reference Level	
Input	0.5 V_{CC}
Output	0.5 V_{CC}

Note 1: For $V_{CC} \leq 4.0V$

2: For $V_{CC} > 4.0V$

FIGURE 1-4: AC TEST CIRCUIT AC

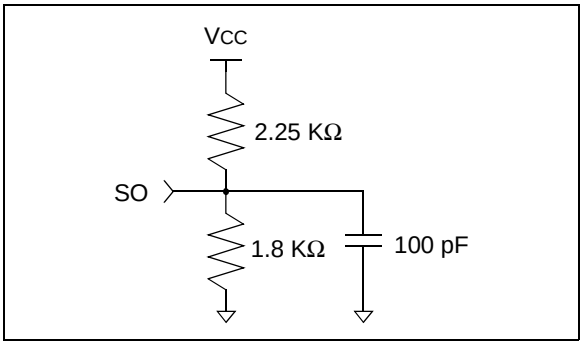

2.0 PIN DESCRIPTIONS

The descriptions of the pins are listed in Table 2-1.

TABLE 2-1: PIN FUNCTION TABLE

Name	PDIP	SOIC	TSSOP	Description
$\overline{CS}$	1	1	3	Chip Select Input
SO	2	2	4	Serial Data Output
$\overline{WP}$	3	3	5	Write-Protect Pin
VSS	4	4	6	Ground
SI	5	5	7	Serial Data Input
SCK	6	6	8	Serial Clock Input
$\overline{HOLD}$	7	7	1	Hold Input
VCC	8	8	2	Supply Voltage

2.1 Chip Select ($\overline{CS}$)

A low level on this pin selects the device. A high level deselects the device and forces it into Standby mode. However, a programming cycle which is already initiated or in progress will be completed, regardless of the $\overline{CS}$ input signal. If $\overline{CS}$ is brought high during a program cycle, the device will go in Standby mode as soon as the programming cycle is complete. When the device is deselected, SO goes into the high-impedance state, allowing multiple parts to share the same SPI bus. A low-to-high transition on $\overline{CS}$ after a valid write sequence initiates an internal write cycle. After power-up, a low level on $\overline{CS}$ is required prior to any sequence being initiated.

2.2 Serial Output (SO)

The SO pin is used to transfer data out of the 25XX040. During a read cycle, data is shifted out on this pin after the falling edge of the serial clock.

2.3 Write-Protect ($\overline{WP}$)

This pin is a hardware write-protect input pin. When $\overline{WP}$ is low, all writes to the array or STATUS register are disabled, but any other operation functions normally. When $\overline{WP}$ is high, all functions, including nonvolatile writes operate normally. $\overline{WP}$ going low at any time will reset the write enable latch and inhibit programming, except when an internal write has already begun. If an internal write cycle has already begun, $\overline{WP}$ going low will have no effect on the write. See Table 3-3 for Write-Protect Functionality Matrix.

2.4 Serial Input (SI)

The SI pin is used to transfer data into the device. It receives instructions, addresses and data. Data is latched on the rising edge of the serial clock.

2.5 Serial Clock (SCK)

The SCK is used to synchronize the communication between a master and the 25XX040. Instructions, addresses or data present on the SI pin are latched on the rising edge of the clock input, while data on the SO pin is updated after the falling edge of the clock input.

2.6 Hold ($\overline{HOLD}$)

The $\overline{HOLD}$ pin is used to suspend transmission to the 25XX040 while in the middle of a serial sequence without having to retransmit the entire sequence again at a later time. It must be held high any time this function is not being used. Once the device is selected and a serial sequence is underway, the $\overline{HOLD}$ pin may be pulled low to pause further serial communication without resetting the serial sequence. The $\overline{HOLD}$ pin must be brought low while SCK is low, otherwise the HOLD function will not be invoked until the next SCK high-to-low transition. The 25XX040 must remain selected during this sequence. The SI, SCK and SO pins are in a high-impedance state during the time the part is paused and transitions on these pins will be ignored. To resume serial communication, $\overline{HOLD}$ must be brought high while the SCK pin is low, otherwise serial communication will not resume. Lowering the HOLD line at any time will tri-state the SO line.

© 2006 Microchip Technology Inc.

3.0 FUNCTIONAL DESCRIPTION

3.1 Principles of Operation

The 25XX040 is a 512 byte Serial EEPROM designed to interface directly with the Serial Peripheral Interface (SPI) port of many of today's popular microcontroller families, including Microchip's PIC16C6X/7X microcontrollers. It may also interface with microcontrollers that do not have a built-in SPI port by using discrete I/O lines programmed properly with the software.

The 25XX040 contains an 8-bit instruction register. The part is accessed via the SI pin, with data being clocked in on the rising edge of SCK. The $\overline{CS}$ pin must be low and the $\overline{HOLD}$ pin must be high for the entire operation. The $\overline{WP}$ pin must be held high to allow writing to the memory array.

Table 3-1 contains a list of the possible instruction bytes and format for device operation. The Most Significant address bit (A8) is located in the instruction byte. All instructions, addresses, and data are transferred MSB first, LSB last.

Data is sampled on the first rising edge of SCK after $\overline{CS}$ goes low. If the clock line is shared with other peripheral devices on the SPI bus, the user can assert the $\overline{HOLD}$ input and place the 25XX040 in 'HOLD' mode. After releasing the $\overline{HOLD}$ pin, operation will resume from the point when the $\overline{HOLD}$ was asserted.

3.2 Read Sequence

The part is selected by pulling $\overline{CS}$ low. The 8-bit `READ` instruction with the A8 address bit is transmitted to the 25XX040 followed by the lower 8-bit address (A7 through A0). After the correct `READ` instruction and address are sent, the data stored in the memory at the selected address is shifted out on the SO pin. The data stored in the memory at the next address can be read sequentially by continuing to provide clock pulses. The internal Address Pointer is automatically incremented to the next higher address after each byte of data is shifted out. When the highest address is reached (01FFh), the address counter rolls over to address 0000h allowing the read cycle to be continued indefinitely. The read operation is terminated by raising the $\overline{CS}$ pin (Figure 3-1).

3.3 Write Sequence

Prior to any attempt to write data to the 25XX040, the write enable latch must be set by issuing the `WREN` instruction (Figure 3-4). This is done by setting $\overline{CS}$ low and then clocking out the proper instruction into the 25XX040. After all eight bits of the instruction are transmitted, the $\overline{CS}$ must be brought high to set the write enable latch. If the write operation is initiated immediately after the `WREN` instruction without $\overline{CS}$ being brought high, the data will not be written to the array because the write enable latch will not have been properly set.

Once the write enable latch is set, the user may proceed by setting the $\overline{CS}$ low, issuing a `WRITE` instruction, followed by the address, and then the data to be written. Keep in mind that the Most Significant address bit (A8) is included in the instruction byte. Up to 16 bytes of data can be sent to the 25XX040 before a write cycle is necessary. The only restriction is that all of the bytes must reside in the same page. A page address begins with `XXXX 0000` and ends with `XXXX 1111`. If the internal address counter reaches `XXXX 1111` and the clock continues, the counter will roll back to the first address of the page and overwrite any data in the page that may have been written.

For the data to be actually written to the array, the $\overline{CS}$ must be brought high after the least significant bit (D0) of the nth data byte has been clocked in. If $\overline{CS}$ is brought high at any other time, the write operation will not be completed. Refer to Figure 3-2 and Figure 3-3 for more detailed illustrations on the byte write sequence and the page write sequence respectively. While the write is in progress, the STATUS register may be read to check the status of the WIP, WEL, BP1 and BP0 bits (Figure 3-6). A read attempt of a memory array location will not be possible during a write cycle. When the write cycle is completed, the write enable latch is reset.

TABLE 3-1: INSTRUCTION SET

Instruction Name	Instruction Format	Description
`READ`	`0000` A_8`011`	Read data from memory array beginning at selected address
`WRITE`	`0000` A_8`010`	Write data to memory array beginning at selected address
`WRDI`	`0000 0100`	Reset the write enable latch (disable write operations)
`WREN`	`0000 0110`	Set the write enable latch (enable write operations)
`RDSR`	`0000 0101`	Read STATUS register
`WRSR`	`0000 0001`	Write STATUS register

Note: A_8 is the 9th address bit necessary to fully address 512 bytes.

FIGURE 3-1: READ SEQUENCE

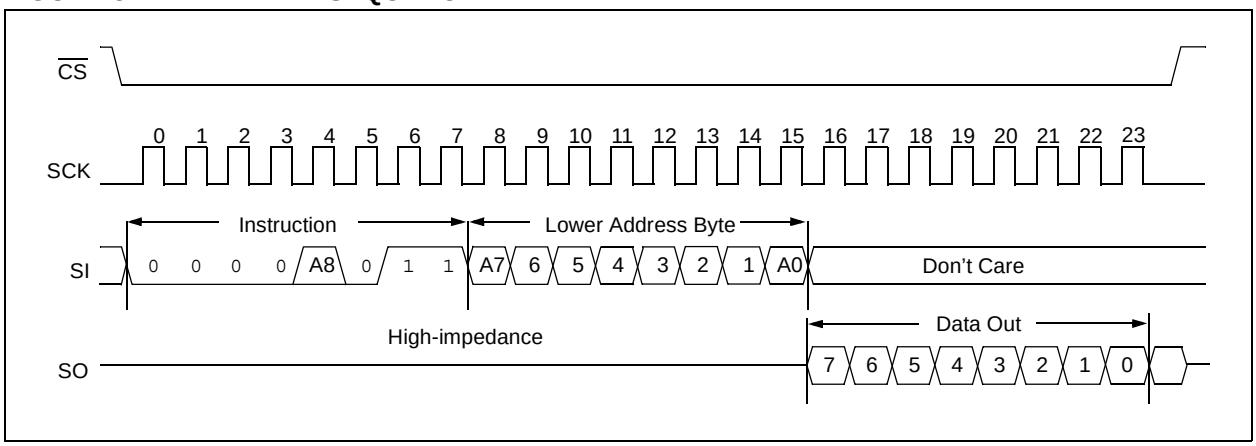

FIGURE 3-2: BYTE WRITE SEQUENCE

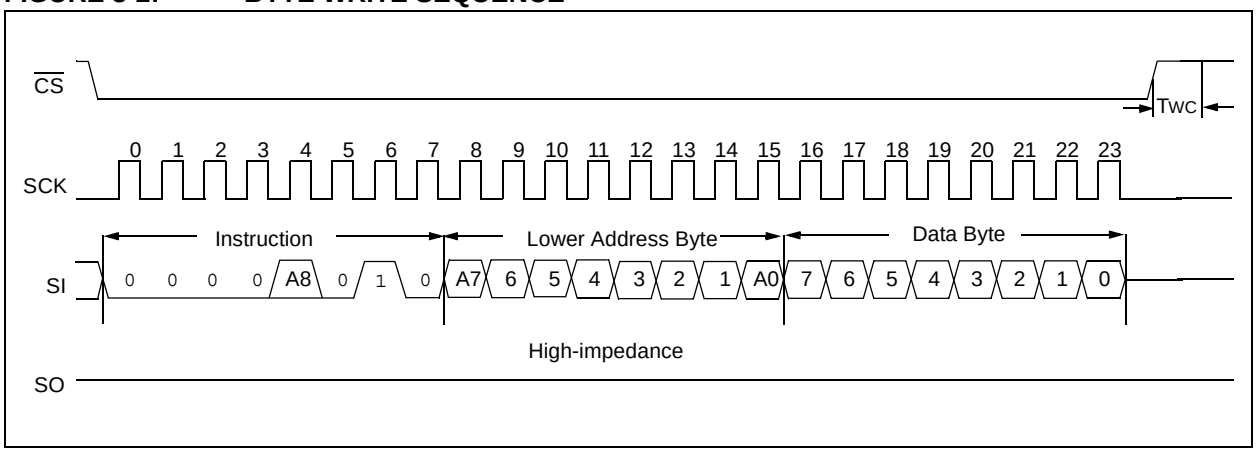

FIGURE 3-3: PAGE WRITE SEQUENCE

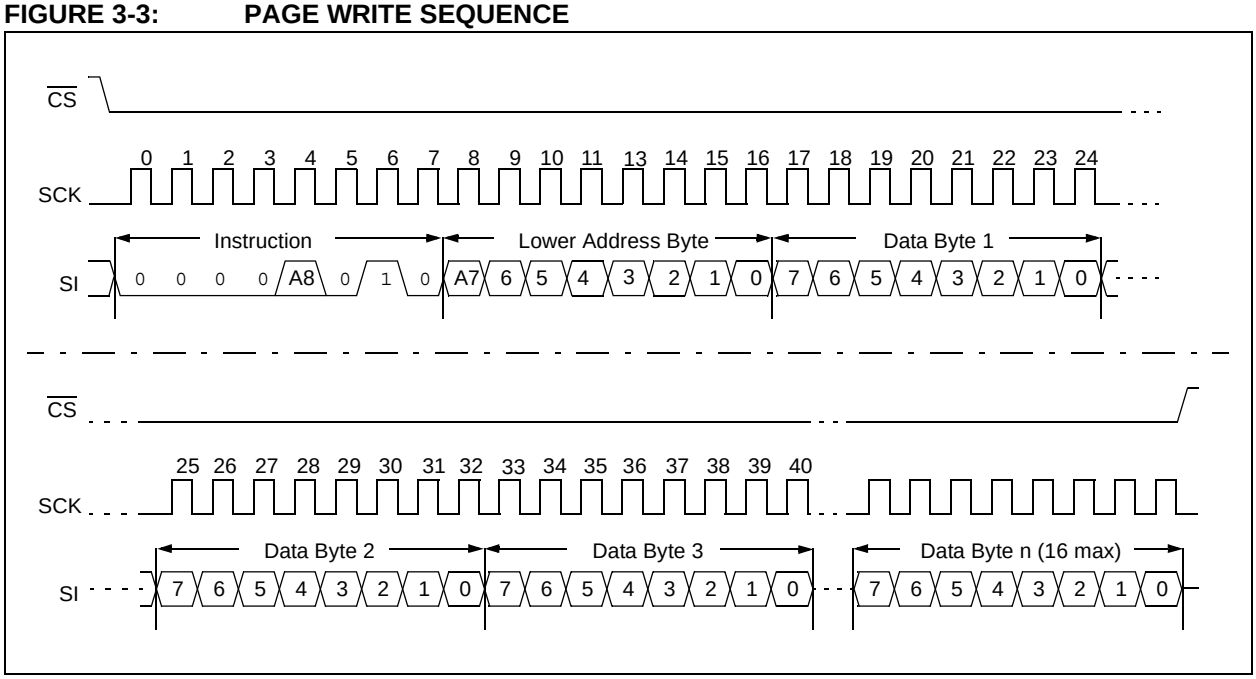

© 2006 Microchip Technology Inc.

3.4 Write Enable (WREN) and Write Disable (WRDI)

The 25XX040 contains a write enable latch. See Table 3-3 for the Write-Protect Functionality Matrix. This latch must be set before any write operation will be completed internally. The `WREN` instruction will set the latch, and the `WRDI` will reset the latch.

The following is a list of conditions under which the write enable latch will be reset:

- Power-up
- `WRDI` instruction successfully executed
- `WRSR` instruction successfully executed
- `WRITE` instruction successfully executed
- $\overline{\text{WP}}$ line is low

FIGURE 3-4: WRITE ENABLE SEQUENCE

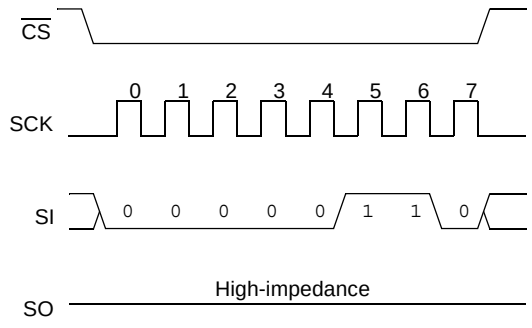

FIGURE 3-5: WRITE DISABLE SEQUENCE

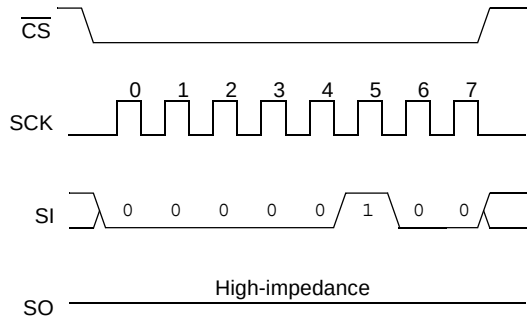

3.5 Read Status Register (RDSR)

The RDSR instruction provides access to the STATUS register. The STATUS register may be read at any time, even during a write cycle. The STATUS register is formatted as follows:

7	6	5	4	3	2	1	0
X	X	X	X	BP1	BP0	WEL	WIP

The **Write-In-Process (WIP)** bit indicates whether the 25XX040 is busy with a write operation. When set to a '1', a write is in progress, when set to a '0', no write is in progress. This bit is read-only.

The **Write Enable Latch (WEL)** bit indicates the status of the write enable latch. When set to a '1', the latch allows writes to the array, when set to a '0', the latch prohibits writes to the array. The state of this bit can always be updated via the WREN or WRDI commands regardless of the state of write protection on the STATUS register. This bit is read-only.

The **Block Protection (BP0 and BP1)** bits indicate which blocks are currently write-protected. These bits are set by the user issuing the WRSR instruction. These bits are nonvolatile.

See Figure 3-6 for RDSR timing sequence.

3.6 Write Status Register (WRSR)

The WRSR instruction allows the user to select one of four levels of protection for the array by writing to the appropriate bits in the STATUS register. The array is divided up into four segments. The user has the ability to write-protect none, one, two, or all four of the segments of the array. The partitioning is controlled as illustrated in Table 3-2.

See Figure 3-7 for WRSR timing sequence.

TABLE 3-2: ARRAY PROTECTION

BP1	BP0	Array Addresses Write-Protected
0	0	none
0	1	upper 1/4 (0180h-01FFh)
1	0	upper 1/2 (0100h-01FFh)
1	1	all (0000h-01FFh)

FIGURE 3-6: READ STATUS REGISTER SEQUENCE

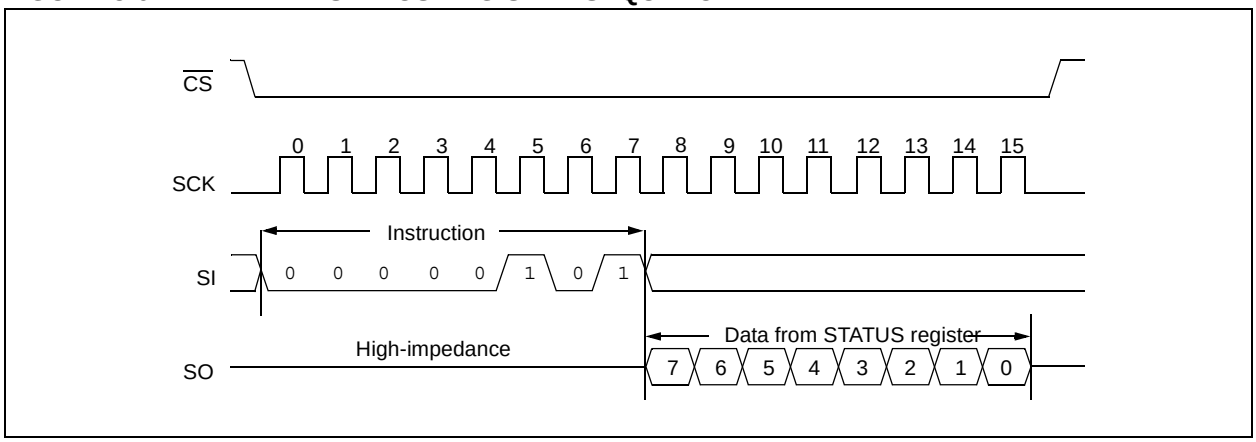

FIGURE 3-7: WRITE STATUS REGISTER SEQUENCE

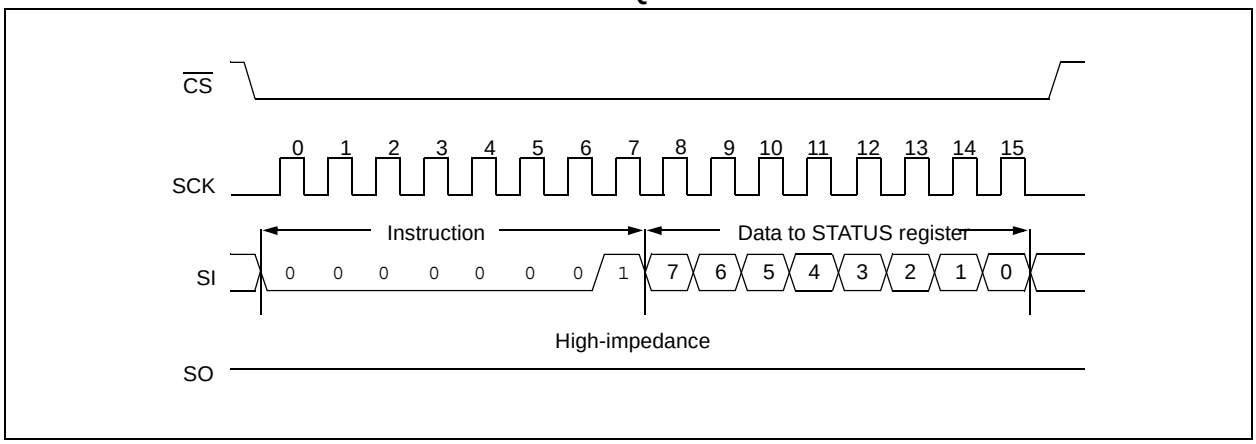

© 2006 Microchip Technology Inc.

3.7 Data Protection

The following protection has been implemented to prevent inadvertent writes to the array:

- The write enable latch is reset on power-up
- A write enable instruction must be issued to set the write enable latch
- After a byte write, page write or STATUS register write, the write enable latch is reset
- $\overline{CS}$ must be set high after the proper number of clock cycles to start an internal write cycle
- Access to the array during an internal write cycle is ignored and programming is continued
- The write enable latch is reset when the $\overline{WP}$ pin is low

3.8 Power-On State

The 25XX040 powers on in the following state:

- The device is in low-power Standby mode ($\overline{CS}$ = 1)
- The write enable latch is reset
- SO is in high-impedance state
- A low level on $\overline{CS}$ is required to enter active state

TABLE 3-3: WRITE-PROTECT FUNCTIONALITY MATRIX

WP	WEL	Protected Blocks	Unprotected Blocks	STATUS Register
Low	X	Protected	Protected	Protected
High	0	Protected	Protected	Protected
High	1	Protected	Writable	Writable

4.0 PACKAGING INFORMATION

4.1 Package Marking Information

8-Lead PDIP (300 mil)

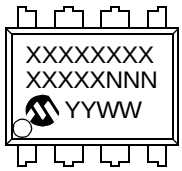

Example:

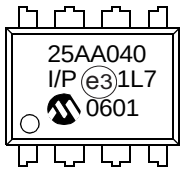

8-Lead SOIC (150 mil)

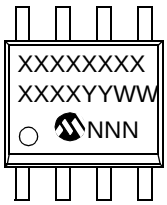

Example:

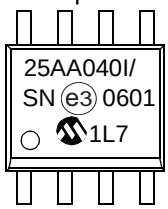

8-Lead TSSOP

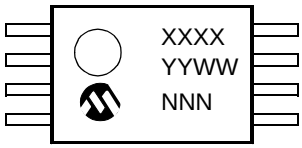

Example:

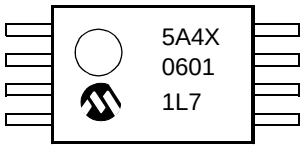

Legend:	XX...X	Customer-specific information
	Y	Year code (last digit of calendar year)
	YY	Year code (last 2 digits of calendar year)
	WW	Week code (week of January 1 is week ‘01’)
	NNN	Alphanumeric traceability code
	e3	Pb-free JEDEC designator for Matte Tin (Sn)
	*	This package is Pb-free. The Pb-free JEDEC designator (e3) can be found on the outer packaging for this package.

Note: In the event the full Microchip part number cannot be marked on one line, it will be carried over to the next line, thus limiting the number of available characters for customer-specific information.

© 2006 Microchip Technology Inc.

8-Lead Plastic Dual In-line (P) – 300 mil (PDIP)

Note: For the most current package drawings, please see the Microchip Packaging Specification located at http://www.microchip.com/packaging

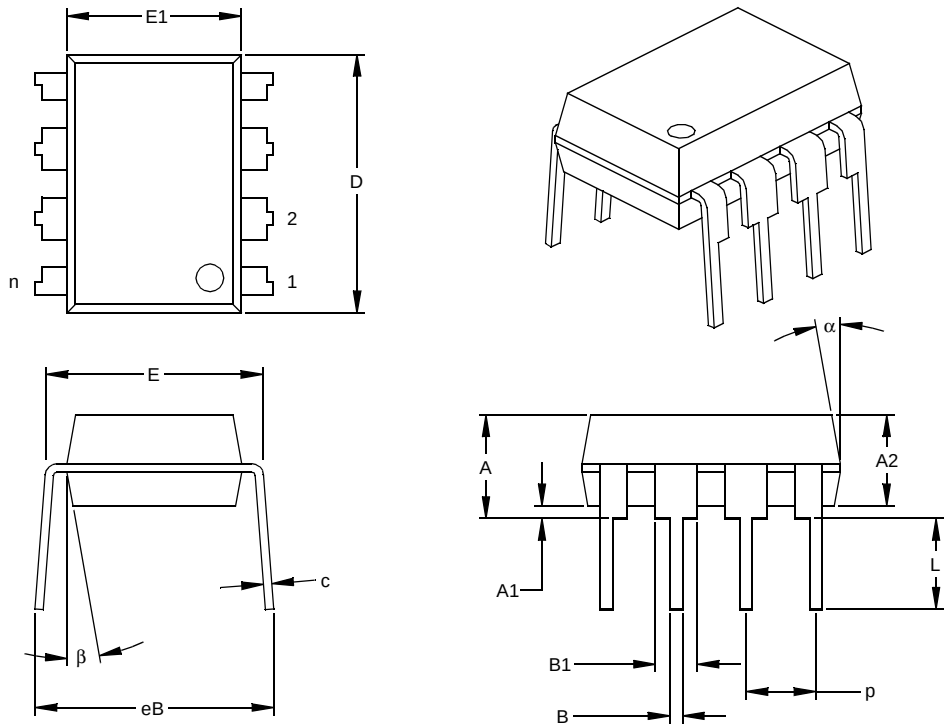

Units		INCHES*			MILLIMETERS		
Dimension Limits		MIN	NOM	MAX	MIN	NOM	MAX
Number of Pins	n		8			8	
Pitch	p		.100			2.54	
Top to Seating Plane	A	.140	.155	.170	3.56	3.94	4.32
Molded Package Thickness	A2	.115	.130	.145	2.92	3.30	3.68
Base to Seating Plane	A1	.015			0.38		
Shoulder to Shoulder Width	E	.300	.313	.325	7.62	7.94	8.26
Molded Package Width	E1	.240	.250	.260	6.10	6.35	6.60
Overall Length	D	.360	.373	.385	9.14	9.46	9.78
Tip to Seating Plane	L	.125	.130	.135	3.18	3.30	3.43
Lead Thickness	c	.008	.012	.015	0.20	0.29	0.38
Upper Lead Width	B1	.045	.058	.070	1.14	1.46	1.78
Lower Lead Width	B	.014	.018	.022	0.36	0.46	0.56
Overall Row Spacing §	eB	.310	.370	.430	7.87	9.40	10.92
Mold Draft Angle Top	α	5	10	15	5	10	15
Mold Draft Angle Bottom	β	5	10	15	5	10	15

***** Controlling Parameter
§ Significant Characteristic
Notes:
Dimensions D and E1 do not include mold flash or protrusions. Mold flash or protrusions shall not exceed .010” (0.254mm) per side.
JEDEC Equivalent: MS-001
Drawing No. C04-018

8-Lead Plastic Small Outline (SN) – Narrow, 150 mil (SOIC)

Note: For the most current package drawings, please see the Microchip Packaging Specification located at http://www.microchip.com/packaging

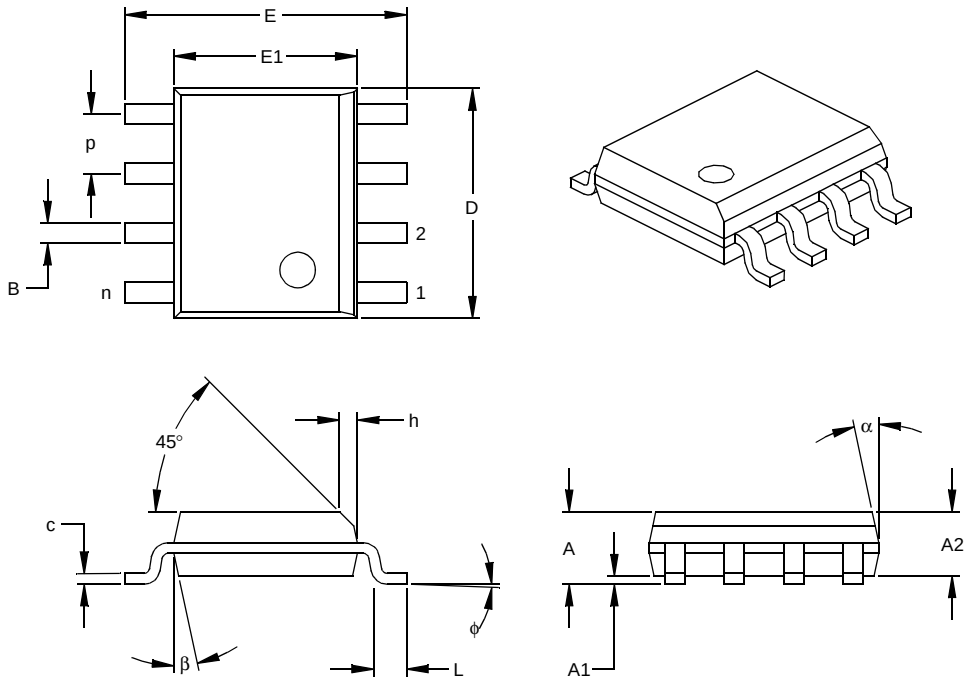

Units		INCHES*			MILLIMETERS		
Dimension Limits		MIN	NOM	MAX	MIN	NOM	MAX
Number of Pins	n		8			8	
Pitch	p		.050			1.27	
Overall Height	A	.053	.061	.069	1.35	1.55	1.75
Molded Package Thickness	A2	.052	.056	.061	1.32	1.42	1.55
Standoff §	A1	.004	.007	.010	0.10	0.18	0.25
Overall Width	E	.228	.237	.244	5.79	6.02	6.20
Molded Package Width	E1	.146	.154	.157	3.71	3.91	3.99
Overall Length	D	.189	.193	.197	4.80	4.90	5.00
Chamfer Distance	h	.010	.015	.020	0.25	0.38	0.51
Foot Length	L	.019	.025	.030	0.48	0.62	0.76
Foot Angle	φ	0	4	8	0	4	8
Lead Thickness	c	.008	.009	.010	0.20	0.23	0.25
Lead Width	B	.013	.017	.020	0.33	0.42	0.51
Mold Draft Angle Top	α	0	12	15	0	12	15
Mold Draft Angle Bottom	β	0	12	15	0	12	15

***** Controlling Parameter
§ Significant Characteristic
Notes:
Dimensions D and E1 do not include mold flash or protrusions. Mold flash or protrusions shall not exceed .010” (0.254mm) per side.
JEDEC Equivalent: MS-012
Drawing No. C04-057

© 2006 Microchip Technology Inc.

8-Lead Plastic Thin Shrink Small Outline (ST) – 4.4 mm (TSSOP)

Note: For the most current package drawings, please see the Microchip Packaging Specification located at http://www.microchip.com/packaging

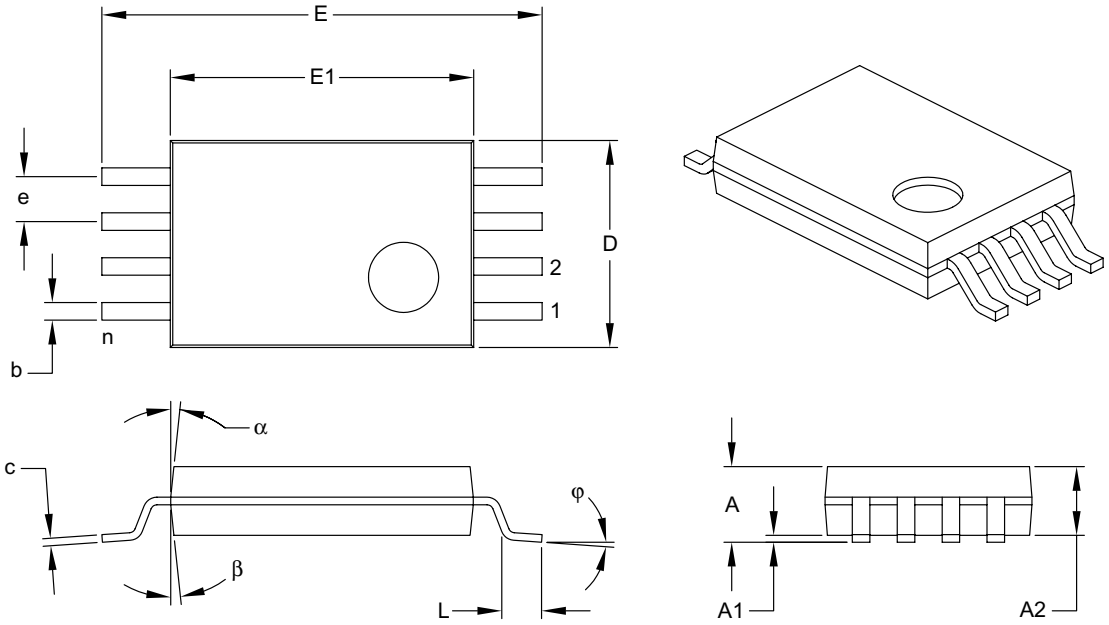

Units		INCHES			MILLIMETERS*		
Dimension Limits		MIN	NOM	MAX	MIN	NOM	MAX
Number of Pins	n		8			8	
Pitch	e		.026 BSC			0.65 BSC	
Overall Height	A	–	–	.047	–	–	1.20
Molded Package Thickness	A2	.031	.039	.041	0.80	1.00	1.05
Standoff	A1	.002	–	.006	0.05	–	0.15
Overall Width	E		.252 BSC			6.40 BSC	
Molded Package Width	E1	.169	.173	.177	4.30	4.40	4.50
Molded Package Length	D	.114	.118	.122	2.90	3.00	3.10
Foot Length	L	.018	.024	.030	0.45	0.60	0.75
Foot Angle	φ	0°	–	8°	0°	–	8°
Lead Thickness	c	.004	–	.008	0.09	–	0.20
Lead Width	b	.007	–	.012	0.19	–	0.30
Mold Draft Angle Top	α		12° REF			12° REF	
Mold Draft Angle Bottom	β		12° REF			12° REF	

*Controlling Parameter

Notes:

1. Dimension D and E1 do not include mold flash or protrusions. Mold flash or protrusions shall not exceed .005" (0.127mm) per side.

BSC: Basic Dimension. Theoretically exact value shown without tolerances.
See ASME Y14.5M

REF: Reference Dimension, usually without tolerance, for information purposes only.
See ASME Y14.5M

Drawing No. C04-086 Revised 7-25-06

APPENDIX A: REVISION HISTORY

Revision D

Corrections to Section 1.0, Electrical Characteristics.

Revision E (8/2006)

Added note to page 1 header (Not recommended for new designs). Added note to package drawings.

Updated document format

© 2006 Microchip Technology Inc.

THE MICROCHIP WEB SITE

Microchip provides online support via our WWW site at www.microchip.com. This web site is used as a means to make files and information easily available to customers. Accessible by using your favorite Internet browser, the web site contains the following information:

- **Product Support** – Data sheets and errata, application notes and sample programs, design resources, user's guides and hardware support documents, latest software releases and archived software
- **General Technical Support** – Frequently Asked Questions (FAQ), technical support requests, online discussion groups, Microchip consultant program member listing
- **Business of Microchip** – Product selector and ordering guides, latest Microchip press releases, listing of seminars and events, listings of Microchip sales offices, distributors and factory representatives

CUSTOMER CHANGE NOTIFICATION SERVICE

Microchip's customer notification service helps keep customers current on Microchip products. Subscribers will receive e-mail notification whenever there are changes, updates, revisions or errata related to a specified product family or development tool of interest.

To register, access the Microchip web site at www.microchip.com, click on Customer Change Notification and follow the registration instructions.

CUSTOMER SUPPORT

Users of Microchip products can receive assistance through several channels:

- Distributor or Representative
- Local Sales Office
- Field Application Engineer (FAE)
- Technical Support
- Development Systems Information Line

Customers should contact their distributor, representative or field application engineer (FAE) for support. Local sales offices are also available to help customers. A listing of sales offices and locations is included in the back of this document.

Technical support is available through the web site at: http://support.microchip.com

READER RESPONSE

It is our intention to provide you with the best documentation possible to ensure successful use of your Microchip product. If you wish to provide your comments on organization, clarity, subject matter, and ways in which our documentation can better serve you, please FAX your comments to the Technical Publications Manager at (480) 792-4150.

Please list the following information, and use this outline to provide us with your comments about this document.

To: Technical Publications Manager Total Pages Sent _____

RE: Reader Response

From: Name _____

Company _____

Address _____

City / State / ZIP / Country _____

Telephone: (_____) _____ - _____ FAX: (_____) _____ - _____

Application (optional):

Would you like a reply?____Y ____N

Device: 25AA040/25LC040/25C040 Literature Number: DS21204E

Questions:

1. What are the best features of this document?

_____

_____

2. How does this document meet your hardware and software development needs?

_____

_____

3. Do you find the organization of this document easy to follow? If not, why?

_____

_____

4. What additions to the document do you think would enhance the structure and subject?

_____

_____

5. What deletions from the document could be made without affecting the overall usefulness?

_____

_____

6. Is there any incorrect or misleading information (what and where)?

_____

_____

7. How would you improve this document?

_____

_____

© 2006 Microchip Technology Inc.

PRODUCT IDENTIFICATION SYSTEM

To order or obtain information, e.g., on pricing or delivery, refer to the factory or the listed sales office.

PART NO.	X	/XX	XXX
Device	Temperature Range	Package	Pattern

Device:

25AA040: 4096-bit 1.8V SPI Serial EEPROM
25AA040T: 4096-bit 1.8V SPI Serial EEPROM (Tape and Reel)
25XX040X: 4096-bit 1.8V SPI Serial EEPROM in alternate pinout (ST only)
25AA040XT: 4096-bit 1.8V SPI Serial EEPROM in alternate pinout Tape and Reel (ST only)
25LC040: 4096-bit 2.5V SPI Serial EEPROM
25LC040T: 4096-bit 2.5V SPI Serial EEPROM (Tape and Reel)
25LC040X: 4096-bit 2.5V SPI Serial EEPROM in alternate pinout (ST only)
25LC040XT: 4096-bit 2.5V SPI Serial EEPROM in alternate pinout Tape and Reel (ST only)
25C040: 4096-bit 5.0V SPI Serial EEPROM
25C040T: 4096-bit 5.0V SPI Serial EEPROM (Tape and Reel)
25C040X: 4096-bit 5.0V SPI Serial EEPROM in alternate pinout (ST only)
25C040XT: 4096-bit 5.0V SPI Serial EEPROM in alternate pinout Tape and Reel (ST only)

Temperature Range:

I = -40 °C to+85 °C
E = -40 °C to +125 °C

Package:

P = Plastic DIP (300 mil body), 8-lead
SN = Plastic SOIC (150 mil body), 8-lead
ST = Plastic TSSOP (4.4 mm body), 8-lead

Examples:

a) 25AA040-I/P: Industrial Temp., PDIP package
b) 25AA040-I/SN: Industrial Temp., SOIC package
c) 25AA040T-I/SN: Tape and Reel, Industrial Temp., SOIC package
d) 25AA040X-I/ST: Alternate Pinout, Industrial Temp., TSSOP package
e) 25AA040XT-I/ST: Alternate Pinout, Tape and Reel, Industrial Temp., TSSOP package

f) 25LC040-I/P: Industrial Temp., PDIP package
g) 25LC040-I/SN: Industrial Temp., SOIC package
h) 25LC040T-I/SN: Tape and Reel, Industrial Temp., SOIC package
i) 25LC040X-I/ST: Alternate Pinout, Industrial Temp., TSSOP package
j) 25LC040XT-I/ST: Alternate Pinout, Tape and Reel, Industrial Temp., TSSOP package

k) 25C040-I/P: Industrial Temp., PDIP package
l) 25C040-I/SN: Industrial Temp., SOIC package
m) 25C040T-I/SN: Tape and Reel, Industrial Temp., SOIC package
n) 25C040X-I/ST: Alternate Pinout, Industrial Temp., TSSOP package
o) 25C040XT-I/ST: Alternate Pinout, Tape and Reel, Industrial Temp., TSSOP package
p) 25C040-E/P: Extended Temp., PDIP package
q) 25C040-E/SN: Extended Temp., SOIC package
r) 25C040T-E/SN: Tape and Reel, Extended Temp., SOIC package
s) 25C040X-E/ST: Alternate Pinout, Extended Temp., TSSOP package
t) 25C040XT-E/ST: Alternate Pinout, Tape and Reel, Extended Temp., TSSOP package

NOTES:

© 2006 Microchip Technology Inc.

Note the following details of the code protection feature on Microchip devices:

- Microchip products meet the specification contained in their particular Microchip Data Sheet.
- Microchip believes that its family of products is one of the most secure families of its kind on the market today, when used in the intended manner and under normal conditions.
- There are dishonest and possibly illegal methods used to breach the code protection feature. All of these methods, to our knowledge, require using the Microchip products in a manner outside the operating specifications contained in Microchip's Data Sheets. Most likely, the person doing so is engaged in theft of intellectual property.
- Microchip is willing to work with the customer who is concerned about the integrity of their code.
- Neither Microchip nor any other semiconductor manufacturer can guarantee the security of their code. Code protection does not mean that we are guaranteeing the product as "unbreakable."

Code protection is constantly evolving. We at Microchip are committed to continuously improving the code protection features of our products. Attempts to break Microchip's code protection feature may be a violation of the Digital Millennium Copyright Act. If such acts allow unauthorized access to your software or other copyrighted work, you may have a right to sue for relief under that Act.

Information contained in this publication regarding device applications and the like is provided only for your convenience and may be superseded by updates. It is your responsibility to ensure that your application meets with your specifications. MICROCHIP MAKES NO REPRESENTATIONS OR WARRANTIES OF ANY KIND WHETHER EXPRESS OR IMPLIED, WRITTEN OR ORAL, STATUTORY OR OTHERWISE, RELATED TO THE INFORMATION, INCLUDING BUT NOT LIMITED TO ITS CONDITION, QUALITY, PERFORMANCE, MERCHANTABILITY OR FITNESS FOR PURPOSE**.** Microchip disclaims all liability arising from this information and its use. Use of Microchip devices in life support and/or safety applications is entirely at the buyer's risk, and the buyer agrees to defend, indemnify and hold harmless Microchip from any and all damages, claims, suits, or expenses resulting from such use. No licenses are conveyed, implicitly or otherwise, under any Microchip intellectual property rights.

Trademarks

The Microchip name and logo, the Microchip logo, Accuron, dsPIC, KEELOQ, microID, MPLAB, PIC, PICmicro, PICSTART, PRO MATE, PowerSmart, rfPIC, and SmartShunt are registered trademarks of Microchip Technology Incorporated in the U.S.A. and other countries.

AmpLab, FilterLab, Migratable Memory, MXDEV, MXLAB, SEEVAL, SmartSensor and The Embedded Control Solutions Company are registered trademarks of Microchip Technology Incorporated in the U.S.A.

Analog-for-the-Digital Age, Application Maestro, CodeGuard, dsPICDEM, dsPICDEM.net, dsPICworks, ECAN, ECONOMONITOR, FanSense, FlexROM, fuzzyLAB, In-Circuit Serial Programming, ICSP, ICEPIC, Linear Active Thermistor, Mindi, MiWi, MPASM, MPLIB, MPLINK, PICkit, PICDEM, PICDEM.net, PICLAB, PICtail, PowerCal, PowerInfo, PowerMate, PowerTool, REAL ICE, rfLAB, rfPICDEM, Select Mode, Smart Serial, SmartTel, Total Endurance, UNI/O, WiperLock and ZENA are trademarks of Microchip Technology Incorporated in the U.S.A. and other countries.

SQTP is a service mark of Microchip Technology Incorporated in the U.S.A.

All other trademarks mentioned herein are property of their respective companies.

© 2006, Microchip Technology Incorporated, Printed in the U.S.A., All Rights Reserved.

Printed on recycled paper.

QUALITY MANAGEMENT SYSTEM
CERTIFIED BY DNV
ISO/TS 16949:2002

Microchip received ISO/TS-16949:2002 certification for its worldwide headquarters, design and wafer fabrication facilities in Chandler and Tempe, Arizona, Gresham, Oregon and Mountain View, California. The Company's quality system processes and procedures are for its PICmicro® 8-bit MCUs, KEELOQ® code hopping devices, Serial EEPROMs, microperipherals, nonvolatile memory and analog products. In addition, Microchip's quality system for the design and manufacture of development systems is ISO 9001:2000 certified.

WORLDWIDE SALES AND SERVICE

AMERICAS

Corporate Office
2355 West Chandler Blvd.
Chandler, AZ 85224-6199
Tel: 480-792-7200
Fax: 480-792-7277
Technical Support:
http://support.microchip.com
Web Address:
www.microchip.com

Atlanta
Alpharetta, GA
Tel: 770-640-0034
Fax: 770-640-0307

Boston
Westborough, MA
Tel: 774-760-0087
Fax: 774-760-0088

Chicago
Itasca, IL
Tel: 630-285-0071
Fax: 630-285-0075

Dallas
Addison, TX
Tel: 972-818-7423
Fax: 972-818-2924

Detroit
Farmington Hills, MI
Tel: 248-538-2250
Fax: 248-538-2260

Kokomo
Kokomo, IN
Tel: 765-864-8360
Fax: 765-864-8387

Los Angeles
Mission Viejo, CA
Tel: 949-462-9523
Fax: 949-462-9608

Santa Clara
Santa Clara, CA
Tel: 408-961-6444
Fax: 408-961-6445

Toronto
Mississauga, Ontario,
Canada
Tel: 905-673-0699
Fax: 905-673-6509

ASIA/PACIFIC

Asia Pacific Office
Suites 3707-14, 37th Floor
Tower 6, The Gateway
Habour City, Kowloon
Hong Kong
Tel: 852-2401-1200
Fax: 852-2401-3431

Australia - Sydney
Tel: 61-2-9868-6733
Fax: 61-2-9868-6755

China - Beijing
Tel: 86-10-8528-2100
Fax: 86-10-8528-2104

China - Chengdu
Tel: 86-28-8665-5511
Fax: 86-28-8665-7889

China - Fuzhou
Tel: 86-591-8750-3506
Fax: 86-591-8750-3521

China - Hong Kong SAR
Tel: 852-2401-1200
Fax: 852-2401-3431

China - Qingdao
Tel: 86-532-8502-7355
Fax: 86-532-8502-7205

China - Shanghai
Tel: 86-21-5407-5533
Fax: 86-21-5407-5066

China - Shenyang
Tel: 86-24-2334-2829
Fax: 86-24-2334-2393

China - Shenzhen
Tel: 86-755-8203-2660
Fax: 86-755-8203-1760

China - Shunde
Tel: 86-757-2839-5507
Fax: 86-757-2839-5571

China - Wuhan
Tel: 86-27-5980-5300
Fax: 86-27-5980-5118

China - Xian
Tel: 86-29-8833-7250
Fax: 86-29-8833-7256

ASIA/PACIFIC

India - Bangalore
Tel: 91-80-4182-8400
Fax: 91-80-4182-8422

India - New Delhi
Tel: 91-11-4160-8631
Fax: 91-11-4160-8632

India - Pune
Tel: 91-20-2566-1512
Fax: 91-20-2566-1513

Japan - Yokohama
Tel: 81-45-471- 6166
Fax: 81-45-471-6122

Korea - Gumi
Tel: 82-54-473-4301
Fax: 82-54-473-4302

Korea - Seoul
Tel: 82-2-554-7200
Fax: 82-2-558-5932 or
82-2-558-5934

Malaysia - Penang
Tel: 60-4-646-8870
Fax: 60-4-646-5086

Philippines - Manila
Tel: 63-2-634-9065
Fax: 63-2-634-9069

Singapore
Tel: 65-6334-8870
Fax: 65-6334-8850

Taiwan - Hsin Chu
Tel: 886-3-572-9526
Fax: 886-3-572-6459

Taiwan - Kaohsiung
Tel: 886-7-536-4818
Fax: 886-7-536-4803

Taiwan - Taipei
Tel: 886-2-2500-6610
Fax: 886-2-2508-0102

Thailand - Bangkok
Tel: 66-2-694-1351
Fax: 66-2-694-1350

EUROPE

Austria - Wels
Tel: 43-7242-2244-3910
Fax: 43-7242-2244-393

Denmark - Copenhagen
Tel: 45-4450-2828
Fax: 45-4485-2829

France - Paris
Tel: 33-1-69-53-63-20
Fax: 33-1-69-30-90-79

Germany - Munich
Tel: 49-89-627-144-0
Fax: 49-89-627-144-44

Italy - Milan
Tel: 39-0331-742611
Fax: 39-0331-466781

Netherlands - Drunen
Tel: 31-416-690399
Fax: 31-416-690340

Spain - Madrid
Tel: 34-91-708-08-90
Fax: 34-91-708-08-91

UK - Wokingham
Tel: 44-118-921-5869
Fax: 44-118-921-5820

08/29/06

© 2006 Microchip Technology Inc.

ООО «ЛайфЭлектроникс» “LifeElectronics” LLC

ИНН 7805602321 КПП 780501001 Р/С 40702810122510004610 ФАКБ "АБСОЛЮТ БАНК" (ЗАО) в г.Санкт-Петербурге К/С 30101810900000000703 БИК 044030703

Компания «Life Electronics» занимается поставками электронных компонентов импортного и отечественного производства от производителей и со складов крупных дистрибьюторов Европы, Америки и Азии.

С конца 2013 года компания активно расширяет линейку поставок компонентов по направлению коаксиальный кабель, кварцевые генераторы и конденсаторы (керамические, пленочные, электролитические), за счёт заключения дистрибьюторских договоров

Мы предлагаем:

- *Конкурентоспособные цены и скидки постоянным клиентам.*
- *Специальные условия для постоянных клиентов.*
- *Подбор аналогов.*
- *Поставку компонентов в любых объемах, удовлетворяющих вашим потребностям.*

- *Приемлемые сроки поставки, возможна ускоренная поставка.*
- *Доставку товара в любую точку России и стран СНГ.*
- *Комплексную поставку.*
- *Работу по проектам и поставку образцов.*
- *Формирование склада под заказчика.*

- *Сертификаты соответствия на поставляемую продукцию (по желанию клиента).*
- *Тестирование поставляемой продукции.*
- *Поставку компонентов, требующих военную и космическую приемку.*
- *Входной контроль качества.*
- *Наличие сертификата ISO.*

В составе нашей компании организован Конструкторский отдел, призванный помогать разработчикам, и инженерам.

Конструкторский отдел помогает осуществить:

- *Регистрацию проекта у производителя компонентов.*
- *Техническую поддержку проекта.*
- *Защиту от снятия компонента с производства.*
- *Оценку стоимости проекта по компонентам.*
- *Изготовление тестовой платы монтаж и пусконаладочные работы.*

Тел: +7 (812) 336 43 04 (многоканальный)
Email: org@lifeelectronics.ru

www.lifeelectronics.ru