Microsemi
SCOTTSDALE DIVISION

1N746 thru 1N759A, -1 and 1N4370 thru 1N4372A, -1 DO-35

Silicon 500 mW Zener Diodes

ALSO AVAILABLE IN SURFACE MOUNT

DESCRIPTION

The popular 1N746 thru 1N759A and 1N4370 thru 1N4372A series of 0.5 watt Zener Voltage Regulators provides a selection from 2.4 to 12 volts in standard 5% or 10% tolerances as well as tighter tolerances identified by different suffix letters on the part number. These glass axial-leaded DO-35 Zeners are also available with an internal-metallurgical-bond option by adding a "-1" suffix. These are also available in JAN, JANTX, and JANTXV military qualifications. Microsemi also offers numerous other Zener products to meet higher and lower power applications.

IMPORTANT: For the most current data, consult *MICROSEMI's* website: http://www.microsemi.com

APPEARANCE

DO-35
(DO-204AH)

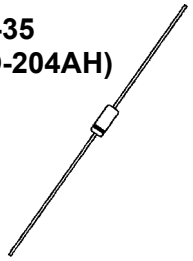

FEATURES

- JEDEC registered 1N746 thru 1N759A and 1N4370 thru 1N4372A series
- Internal metallurgical bond option available by adding a "-1" suffix
- Also available in JAN, JANTX, and JANTXV qualifications per MIL-PRF-19500/127 by adding the JAN, JANTX, or JANTXV prefixes to part numbers for desired level of screening as well as –1" suffix; (e.g. JANTX1N751A-1, JANTXV1N758C-1, etc.)
- Military Surface Mount equivalents also available in DO-213AA by adding a UR-1 suffix in addition to the JAN, JANTX, and JANTXV prefix; e.g. JANTX1N962BUR-1 (see separate data sheet)
- Commercial Surface Mount equivalents available as MLL746 to MLL759A and MLL4370 to MLL4372A including the "-1" suffix in the DO-213AA MELF style package (consult factory for others)
- DO-7 glass body axial-leaded Zener equivalents are also available

APPLICATIONS / BENEFITS

- Regulates voltage over a broad operating current and temperature range
- Selection from 2.4 to 12 V
- Standard voltage tolerances are plus/minus 5% with A suffix identification and 10 % with no suffix
- Tight tolerances available in plus or minus 2% or 1% with C or D suffix respectively
- Flexible axial-lead mounting terminals
- Nonsensitive to ESD per MIL-STD-750 Method 1020
- Minimal capacitance (see Figure 3)
- Inherently radiation hard as described in Microsemi MicroNote 050

MAXIMUM RATINGS

- Operating and Storage temperature: -65°C to +175°C
- Thermal Resistance: 250°C/W junction to lead at 3/8 (10 mm) lead length from body, or 310°C/W junction to ambient when mounted on FR4 PC board (1 oz Cu) with 4 mm^2 copper pads and track width 1 mm, length 25 mm
- Steady-State Power: 0.5 watts at $T_L \leq 50°C$ 3/8 inch (10 mm) from body or 0.48 W at $T_A \leq 25°C$ when mounted on FR4 PC board as described for thermal resistance above (also see Figure1)
- Forward voltage @200 mA: 1.1 volts
- Solder Temperatures: 260°C for 10 s (max)

MECHANICAL AND PACKAGING

- CASE: Hermetically sealed axial-lead glass DO-35 (DO-204AH) package
- TERMINALS: Leads, tin-lead plated solderable per MIL-STD-750, method 2026
- POLARITY: Cathode indicated by band. Diode to be operated with the banded end positive with respect to the opposite end for Zener regulation
- MARKING: Part number
- TAPE & REEL option: Standard per EIA-296 (add "TR" suffix to part number)
- WEIGHT: 0.2 grams
- See package dimensions on last page

Copyright © 2003

Microsemi
Scottsdale Division
8700 E. Thomas Rd. PO Box 1390, Scottsdale, AZ 85252 USA, (480) 941-6300, Fax: (480) 947-1503

ELECTRICAL CHARACTERISTICS* @ 25°C

JEDEC TYPE NO. (NOTE1)	NOMINAL ZENER VOLTAGE V_Z @ I_{ZT} (NOTE 2)	ZENER TEST CURRENT I_{ZT}	MAXIMUM ZENER IMPEDANCE Z_{ZT} @ I_{ZT} (NOTE 3)	MAXIMUM REVERSE CURRENT I_R @ V_R = 1 VOLT		MAXIMUM ZENER CURRENT I_{ZM} (NOTE 4)	TYPICAL TEMP COEFF. OF ZENER VOLTAGE α_{VZ}
				@25°C	@+150°C		
	VOLTS	mA	OHMS	µA	µA	mA	%/°C
1N4370	2.4	20	30	100	200	150	-.085
1N4371	2.7	20	30	75	150	135	-.080
1N4372	3.0	20	29	50	100	120	-.075
1N746	3.3	20	28	10	30	110	-.066
1N747	3.6	20	24	10	30	100	-.058
1N748	3.9	20	23	10	30	95	-.046
1N749	4.3	20	22	2	30	85	-.033
1N750	4.7	20	19	2	30	75	-.015
1N751	5.1	20	17	1	20	70	+/-.010
1N752	5.6	20	11	1	20	65	+.030
1N753	6.2	20	7	.1	20	60	+.049
1N754	6.8	20	5	.1	20	55	+.053
1N755	7.5	20	6	.1	20	50	+.057
1N756	8.2	20	8	.1	20	45	+.060
1N757	9.1	20	10	.1	20	40	+.061
1N758	10.0	20	17	.1	20	35	+.062
1N759	12.0	20	30	.1	20	30	+.062

* JEDEC Registered Data

NOTE 1: Standard tolerance on JEDEC types shown is +/- 10%. Suffix letter A denotes +/- 5% tolerance; suffix letter C denotes +/- 2%; and suffix letter D denotes +/- 1% tolerance.

NOTE 2: Voltage measurements to be performed 20 seconds after application of dc test current.

NOTE 3: Zener impedance derived by superimposing on I_{ZT}, a 60 cps, rms ac current equal to 10% I_{ZT} (2mA ac). See MicroNote 202 for typical zener Impedance variation with different operating currents.

NOTE 4: Allowance has been made for the increase in V_Z due to Z_Z and for the increase in junction temperature as the unit approaches thermal equilibrium at the power dissipation of 400 mW.

GRAPHS

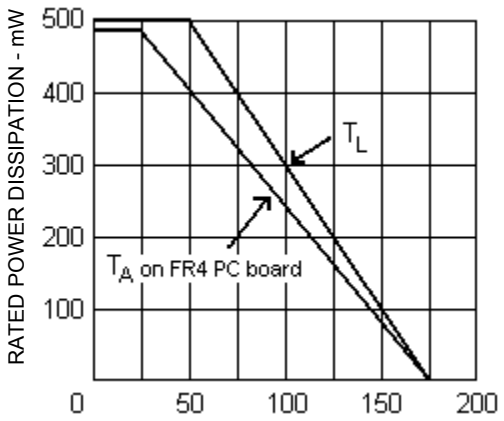

T_L – LEAD TEMPERATURE (°C) 3/8" FROM BODY or
T_A on FR4 PC BOARD

FIGURE 1
POWER DERATING CURVE

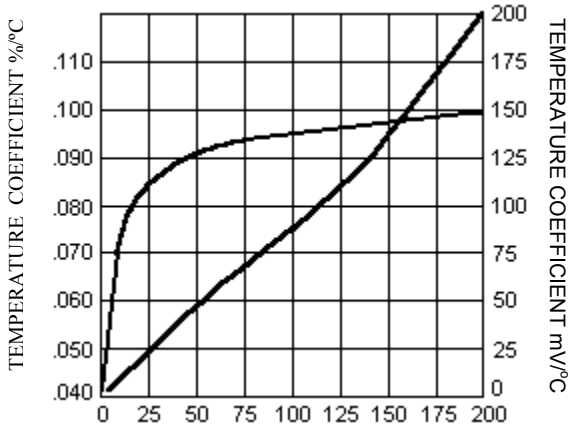

FIGURE 2
ZENER VOLTAGE TEMPERATURE
COEFFICIENT vs. ZENER VOLTAGE

Copyright © 2003

Microsemi
Scottsdale Division
8700 E. Thomas Rd. PO Box 1390, Scottsdale, AZ 85252 USA, (480) 941-6300, Fax: (480) 947-1503

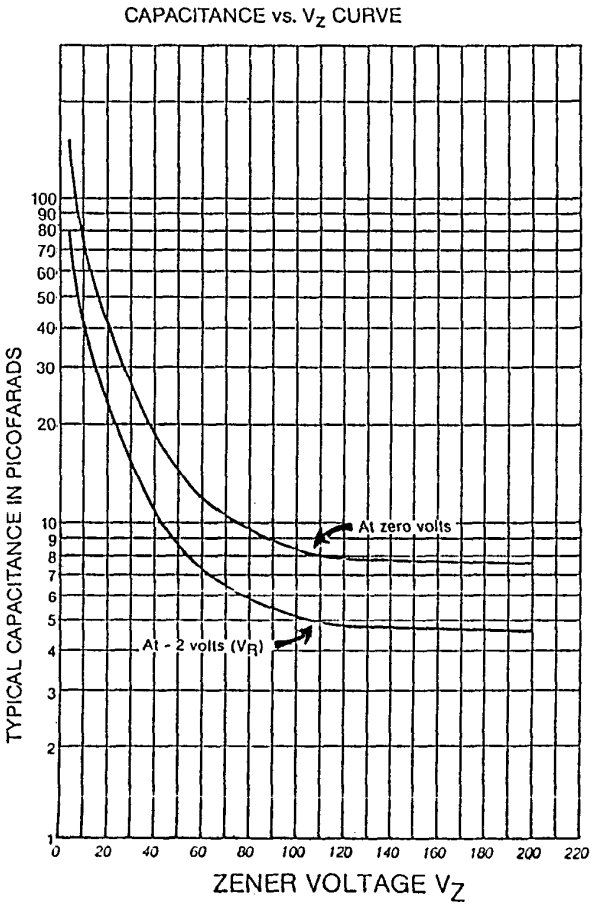

FIGURE 3
CAPACITANCE vs. ZENER VOLTAGE
(TYPICAL)

PACKAGE DIMENSIONS

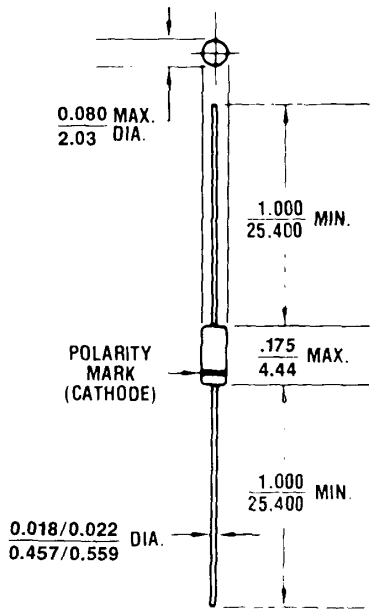

All dimensions in: INCH
mm

Copyright © 2003

Microsemi
Scottsdale Division
8700 E. Thomas Rd. PO Box 1390, Scottsdale, AZ 85252 USA, (480) 941-6300, Fax: (480) 947-1503

LifeElectronics
Живое партнерство

ООО «ЛайфЭлектроникс» **“LifeElectronics” LLC**

ИНН 7805602321 КПП 780501001 Р/С 40702810122510004610 ФАКБ "АБСОЛЮТ БАНК" (ЗАО) в г.Санкт-Петербурге К/С 30101810900000000703 БИК 044030703

Компания «Life Electronics» занимается поставками электронных компонентов импортного и отечественного производства от производителей и со складов крупных дистрибьюторов Европы, Америки и Азии.

С конца 2013 года компания активно расширяет линейку поставок компонентов по направлению коаксиальный кабель, кварцевые генераторы и конденсаторы (керамические, пленочные, электролитические), за счёт заключения дистрибьюторских договоров

Мы предлагаем:

- *Конкурентоспособные цены и скидки постоянным клиентам.*
- *Специальные условия для постоянных клиентов.*
- *Подбор аналогов.*
- *Поставку компонентов в любых объемах, удовлетворяющих вашим потребностям.*

- *Приемлемые сроки поставки, возможна ускоренная поставка.*
- *Доставку товара в любую точку России и стран СНГ.*
- *Комплексную поставку.*
- *Работу по проектам и поставку образцов.*
- *Формирование склада под заказчика.*

- *Сертификаты соответствия на поставляемую продукцию (по желанию клиента).*
- *Тестирование поставляемой продукции.*
- *Поставку компонентов, требующих военную и космическую приемку.*
- *Входной контроль качества.*
- *Наличие сертификата ISO.*

В составе нашей компании организован Конструкторский отдел, призванный помогать разработчикам, и инженерам.

Конструкторский отдел помогает осуществить:

- *Регистрацию проекта у производителя компонентов.*
- *Техническую поддержку проекта.*
- *Защиту от снятия компонента с производства.*
- *Оценку стоимости проекта по компонентам.*
- *Изготовление тестовой платы монтаж и пусконаладочные работы.*

Тел: +7 (812) 336 43 04 (многоканальный)
Email: org@lifeelectronics.ru

www.lifeelectronics.ru