SJxx25xx Series

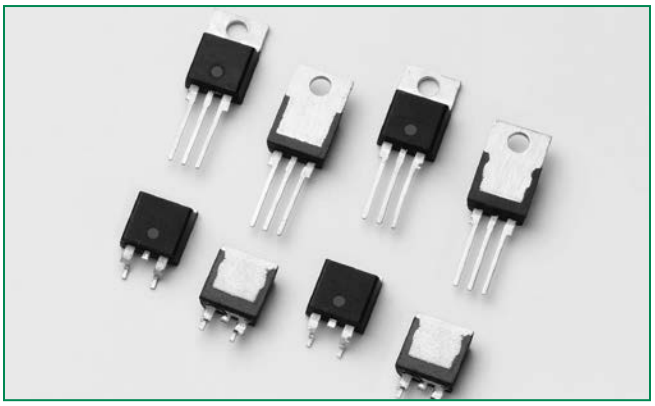

Schematic Symbol

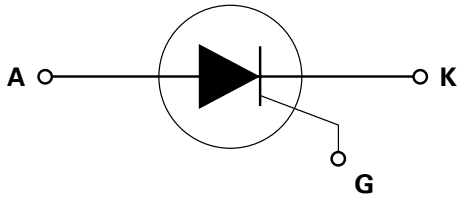

Description

This SJxx25xx high temperature SCR series is ideal for uni-directional switch applications such as phase control in heating, motor speed controls, converters/rectifiers and inrush current controllers. These SCRs have a low gate current trigger level of 6mA,10mA or 35mA maximum at approximately 1.5V

Features & Benefits

- Halogen free and RoHS compliant
- 150°C maximum junction temperature
- Surge capability up to 350 A at 60 Hz half cycle

Applications

Typical applications include AC Generator (ACG) rectifiers, battery voltage regulators, generic converters, inrush current controller in various AC to DC applications and soft starter for low power AC motor. Additional applications include controls for power tools, home/brown good and white goods appliances.

Isolated packages offered for ease of heat sinking.

Agency Approval

Agency	Agency File Number
	L Packages: E71639

Main Features

Symbol	Value	Unit
$I_{T(RMS)}$	25	A
V_{DRM}/V_{RRM}	400 or 600	V
I_{GT}	6,10, to 35	mA

Absolute Maximum Ratings

Symbol	Parameter	Test Conditions		Value	Unit
V_{DRM}/V_{RSM}	Peak non-repetitive blocking voltage	Pw=100 µs		V_{DRM}/V_{RRM}+100	V
$I_{T(RMS)}$	RMS on-state current	SJxx25Lx	T_C = 100°C	25	A
		SJxx25Rx SJxx25Nx	T_C = 125°C		
$I_{T(AV)}$	Average on-state current	SJxx25Lx	T_C = 100°C	16	A
		SJxx25Rx SJxx25Nx	T_C = 125°C		
I_{TSM}	Peak non-repetitive surge current	single half cycle; f = 50Hz; T_J (initial) = 25°C		300	A
		single half cycle; f = 60Hz; T_J (initial) = 25°C		350	
I^2t	I^2t Value for fusing	t_p = 8.3 ms		510	A^2s
di/dt	Critical rate of rise of on-state current	f = 60Hz ; T_J = 150°C		125	A/µs
I_{GM}	Peak gate current	T_J = 150°C		3	A
$P_{G(AV)}$	Average gate power dissipation	T_J = 150°C		0.6	W
T_{stg}	Storage temperature range			-40 to 150	°C
T_J	Operating junction temperature range			-40 to 150	°C

Note: xx=voltage/10, x=sensitivity

©2018 Littelfuse, Inc
Specifications are subject to change without notice.

Revised: 07/25/18

Electrical Characteristics (T_J = 25°C, unless otherwise specified)

Symbol	Test Conditions		Value			Unit
			SJxx25x	SJxx25x1	SJxx25x2	
I_{GT}	V_D = 12V R_L = 60 Ω	MAX.	35	6	10	mA
		MIN.	8	2	5	
V_{GT}	V_D = 12V R_L = 60 Ω	MAX.	1.5			V
dv/dt	V_D = 67% V_{DRM}; gate open; T_J = 125°C	MIN.	800	70	500	V/µs
	V_D = 67% V_{DRM}; gate open; T_J = 150°C		400	-	200	
V_{GD}	V_D = V_{DRM} R_L = 3.3 kΩ T_J = 125°C	MIN.	0.2			V
I_H	I_T = 400mA (initial)	MAX.	75	15	35	mA
t_q	I_T = 2A; t_p = 50µs; dv/dt = 5V/µs; di/dt = 30A/µs	MAX.	40			µs
t_{gt}	I_G = 2 x I_{GT} PW = 15µs I_T = 50A	TYP.	2			µs

Note: xx=voltage/10, x=package

Static Characteristics

Symbol	Test Conditions			Value	Unit
V_{TM}	Component I_T = 50A; t_p = 380 µs		MAX.	1.6	V
I_{DRM} / I_{RRM}	V_{DRM} = V_{RRM}	T_J = 25°C	MAX.	10	µA
		T_J = 125°C		1000	
		T_J = 150°C		3000	

Thermal Resistances

Symbol	Parameter		Value	Unit
$R_{\theta(JC)}$	Junction to case (AC)	SJxx25Rx SJxx25Nx	1.0	°C/W
		SJxx25Lx	2.3	

Note: xx=voltage/10, x=sensitivity

Figure 1: Normalized DC Gate Trigger Current vs. Junction Temperature

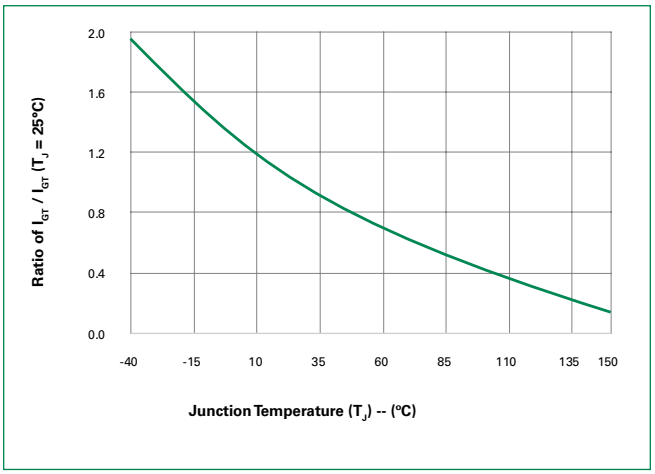

Figure 2: Normalized DC Gate Trigger Voltage vs. Junction Temperature

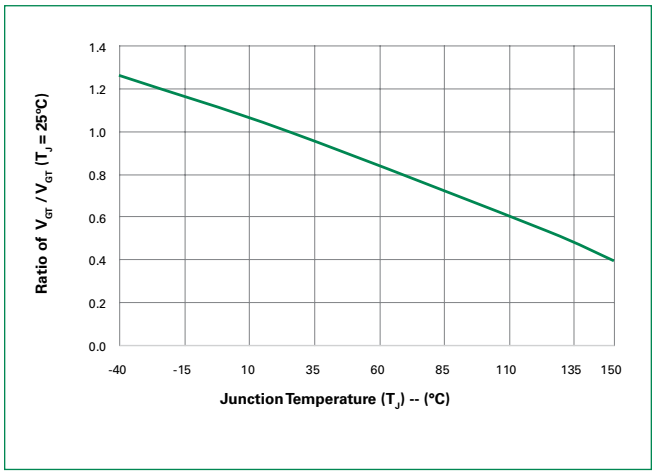

©2018 Littelfuse, Inc
Specifications are subject to change without notice.
Revised: 07/25/18

Figure 3: Normalized DC Holding Current vs. Junction Temperature

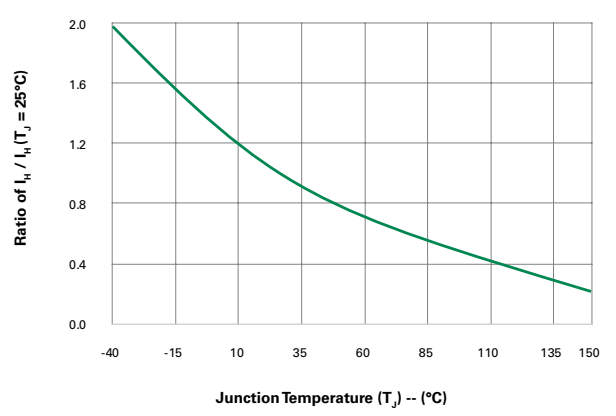

Figure 4: On-State Current vs. On-State Voltage (Typical)

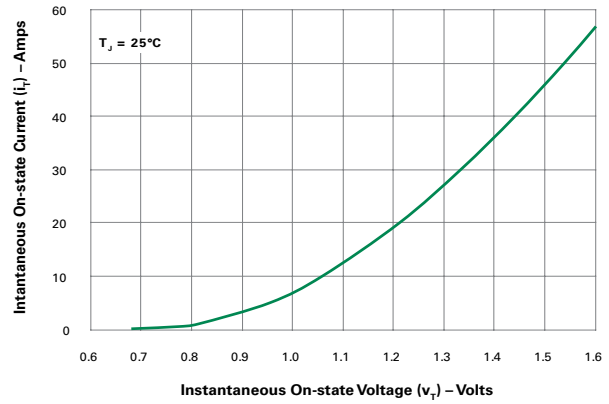

Figure 5: Power Dissipation (Typical) vs. RMS On-State Current

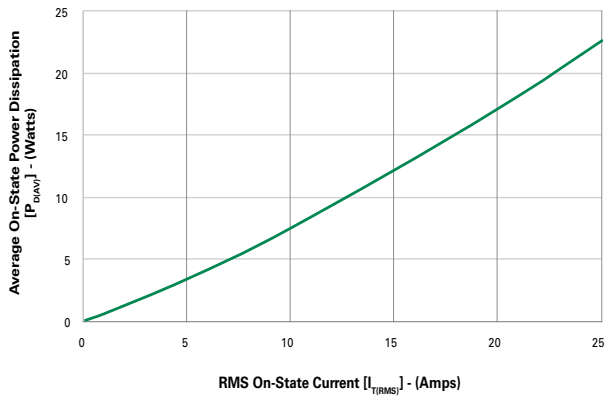

Figure 6: Maximum Allowable Case Temperature vs. RMS On-State Current

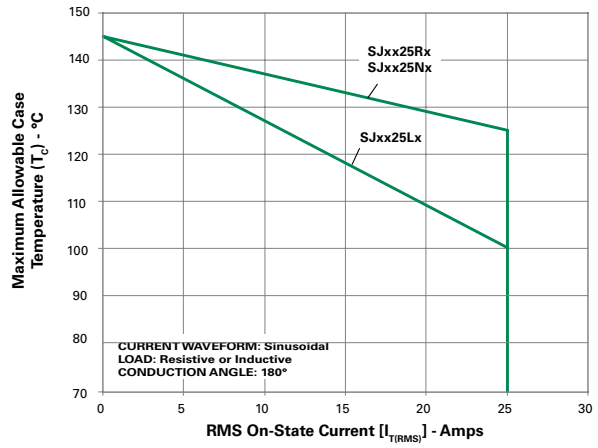

Figure 7: Maximum Allowable Case Temperature vs. Average On-State Current

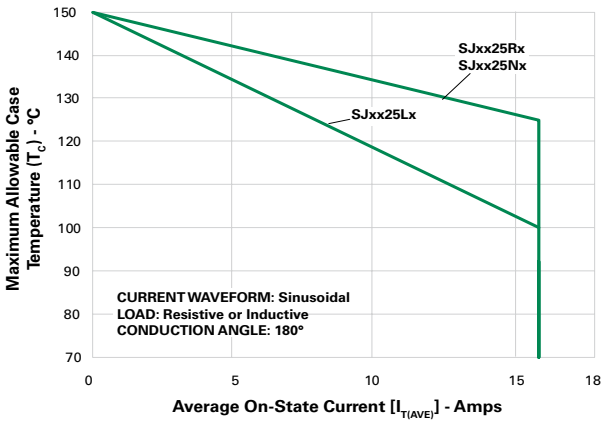

Figure 8: Peak Capacitor Discharge Current

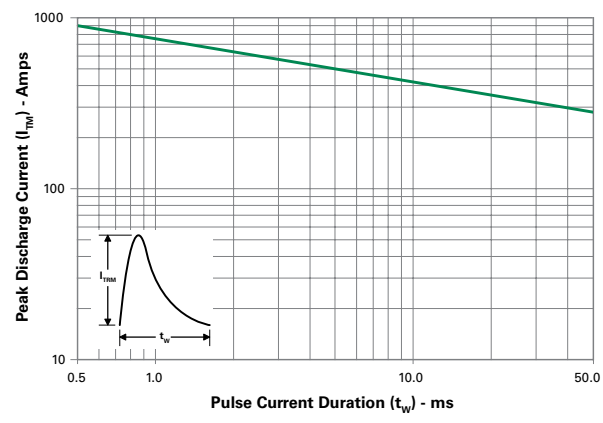

©2018 Littelfuse, Inc
Specifications are subject to change without notice.
Revised: 07/25/18

Figure 9: Peak Capacitor Discharge Current Derating

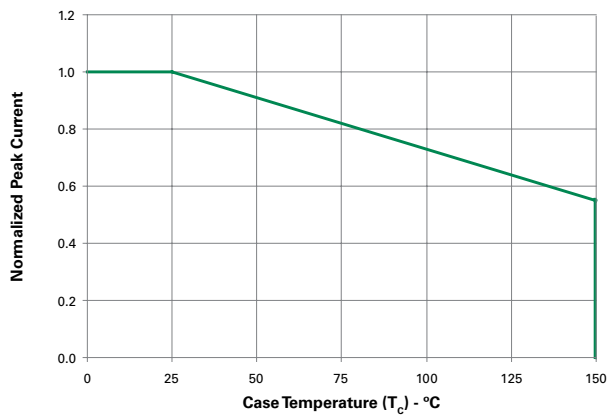

Figure 10: Surge Peak On-State Current vs. Number of Cycles

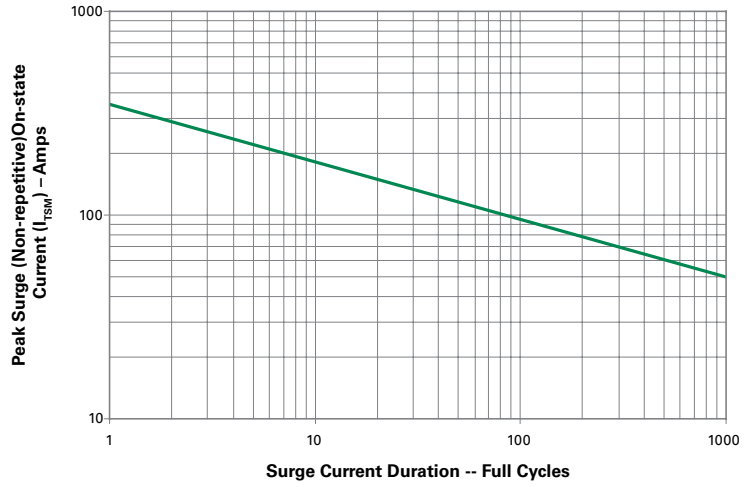

SUPPLY FREQUENCY: 60 Hz Sinusoidal
LOAD: Resistive
RMS On-State Current: [$I_{T(RMS)}$]: Maximum Rated Value at Specified Case Temperature

Notes:
1. Gate control may be lost during and immediately following surge current interval.
2. Overload may not be repeated until junction temperature has returned to steady-state rated value.

©2018 Littelfuse, Inc
Specifications are subject to change without notice.
Revised: 07/25/18

Soldering Parameters

Reflow Condition		Pb – Free assembly
Pre Heat	-Temperature Min ($T_{s(min)}$)	150°C
	-Temperature Max ($T_{s(max)}$)	200°C
	-Time (min to max) (t_s)	60 – 180 secs
Average ramp up rate (Liquidus Temp) (T_L) to peak		5°C/second max
$T_{S(max)}$ to T_L - Ramp-up Rate		5°C/second max
Reflow	-Temperature (T_L) (Liquidus)	217°C
	-Time (t_L)	60 – 150 seconds
Peak Temperature (T_P)		$260^{+0/-5}$ °C
Time within 5°C of actual peak Temperature (t_p)		20 – 40 seconds
Ramp-down Rate		5°C/second max
Time 25°C to peak Temperature (T_P)		8 minutes Max.
Do not exceed		280°C

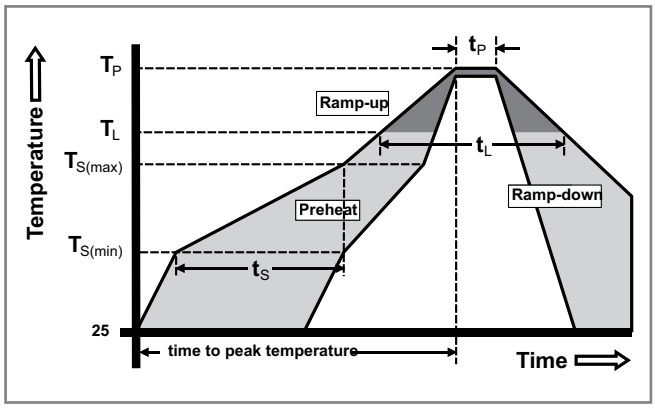

Physical Specifications

Terminal Finish	100% Matte Tin-plated
Body Material	UL Recognized compound meeting flammability rating V-0.
Lead Material	Copper Alloy

Design Considerations

Careful selection of the correct component for the application's operating parameters and environment will go a long way toward extending the operating life of the Thyristor. Good design practice should limit the maximum continuous current through the main terminals to 75% of the component rating. Other ways to ensure long life for a power discrete semiconductor are proper heat sinking and selection of voltage ratings for worst case conditions. Overheating, overvoltage (including dv/dt), and surge currents are the main killers of semiconductors. Correct mounting, soldering, and forming of the leads also help protect against component damage.

Environmental Specifications

Test	Specifications and Conditions
AC Blocking	MIL-STD-750, M-1040, Cond A Applied Peak AC voltage @ 150°C for 1008 hours
Temperature Cycling	MIL-STD-750, M-1051, 100 cycles; -55°C to +150°C; 15-min dwell-time
Temperature/ Humidity	EIA / JEDEC, JESD22-A101 1008 hours; 160V - DC: 85°C; 85% rel humidity
High Temp Storage	MIL-STD-750, M-1031, 1008 hours; 150°C
Low-Temp Storage	1008 hours; -40°C
Resistance to Solder Heat	MIL-STD-750 Method 2031
Solderability	ANSI/J-STD-002, category 3, Test A
Lead Bend	MIL-STD-750, M-2036 Cond E
Moisture Sensitivity Level	Level 1, JEDEC-J-STD-020D

©2018 Littelfuse, Inc
Specifications are subject to change without notice.
Revised: 07/25/18

Dimensions — TO-220AB (R-Package) — Non-Isolated Mounting Tab Common with Center Lead

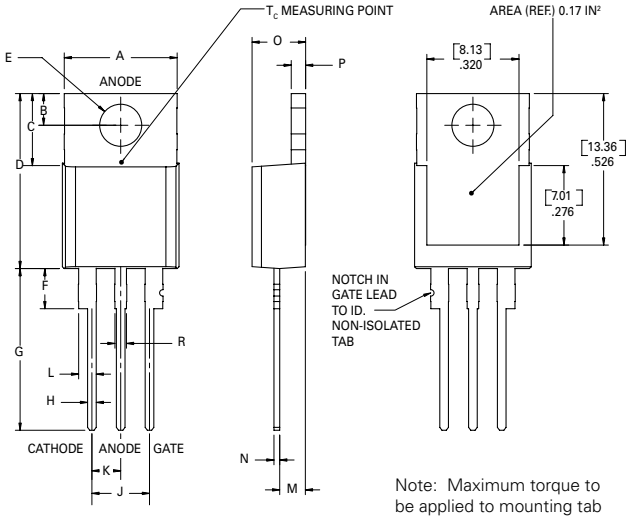

Note: Maximum torque to be applied to mounting tab is 8 in-lbs. (0.904 Nm).

Dimension	Inches		Millimeters	
	Min	Max	Min	Max
A	0.380	0.420	9.65	10.67
B	0.105	0.115	2.67	2.92
C	0.230	0.250	5.84	6.35
D	0.590	0.620	14.99	15.75
E	0.142	0.147	3.61	3.73
F	0.110	0.130	2.79	3.30
G	0.540	0.575	13.72	14.61
H	0.025	0.035	0.64	0.89
J	0.195	0.205	4.95	5.21
K	0.095	0.105	2.41	2.67
L	0.060	0.075	1.52	1.91
M	0.085	0.095	2.16	2.41
N	0.018	0.024	0.46	0.61
O	0.178	0.188	4.52	4.78
P	0.045	0.060	1.14	1.52
R	0.038	0.048	0.97	1.22

Dimensions — TO-220AB (L-Package) — Isolated Mounting Tab

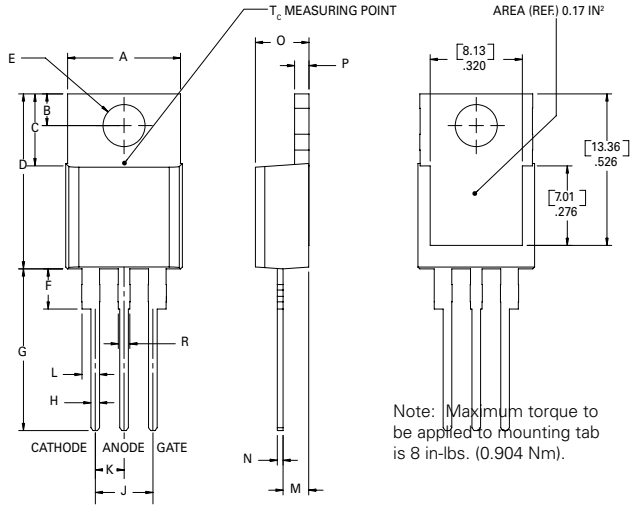

Note: Maximum torque to be applied to mounting tab is 8 in-lbs. (0.904 Nm).

Dimension	Inches		Millimeters	
	Min	Max	Min	Max
A	0.380	0.420	9.65	10.67
B	0.105	0.115	2.67	2.92
C	0.230	0.250	5.84	6.35
D	0.590	0.620	14.99	15.75
E	0.142	0.147	3.61	3.73
F	0.110	0.130	2.79	3.30
G	0.540	0.575	13.72	14.61
H	0.025	0.035	0.64	0.89
J	0.195	0.205	4.95	5.21
K	0.095	0.105	2.41	2.67
L	0.060	0.075	1.52	1.91
M	0.085	0.095	2.16	2.41
N	0.018	0.024	0.46	0.61
O	0.178	0.188	4.52	4.78
P	0.045	0.060	1.14	1.52
R	0.038	0.048	0.97	1.22

©2018 Littelfuse, Inc
Specifications are subject to change without notice.
Revised: 07/25/18

Dimensions –TO- 263AB (N-package) — D²-Pak Surface Mount

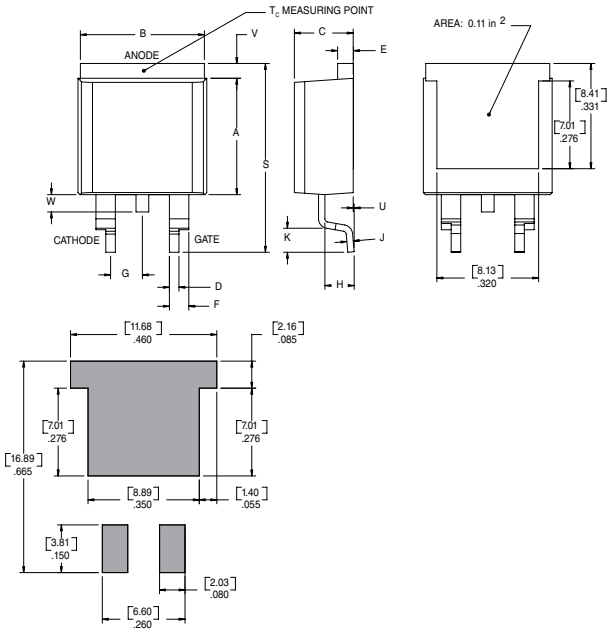

Dimension	Inches		Millimeters	
	Min	Max	Min	Max
A	0.360	0.370	9.14	9.40
B	0.380	0.420	9.65	10.67
C	0.178	0.188	4.52	4.78
D	0.025	0.035	0.64	0.89
E	0.045	0.060	1.14	1.52
F	0.060	0.075	1.52	1.91
G	0.095	0.105	2.41	2.67
H	0.092	0.102	2.34	2.59
J	0.018	0.024	0.46	0.61
K	0.090	0.110	2.29	2.79
S	0.590	0.625	14.99	15.88
V	0.035	0.045	0.89	1.14
U	0.002	0.010	0.05	0.25
W	0.040	0.070	1.016	1.78

Product Selector

Part Number	Voltage		Gate Sensitivity	Type	Package
	400V	600V			
SJxx25L	X	X	35mA	Standard SCR	TO-220L
SJxx25R	X	X	35mA	Standard SCR	TO-220R
SJxx25N	X	X	35mA	Standard SCR	TO-263
SJxx25L1	X	X	6mA	Standard SCR	TO-220L
SJxx25R1	X	X	6mA	Standard SCR	TO-220R
SJxx25N1	X	X	6mA	Standard SCR	TO-263
SJxx25L2	X	X	10mA	Standard SCR	TO-220L
SJxx25R2	X	X	10mA	Standard SCR	TO-220R
SJxx25N2	X	X	10mA	Standard SCR	TO-263

Note: xx = Voltage/10

Packing Options

Part Number	Marking	Weight	Packing Mode	Base Quantity
SJxx25LxTP	SJxx25Lx	2.2g	Tube	500 (50 per tube)
SJxx25RxTP	SJxx25Rx	2.2g	Tube	500 (50 per tube)
SJxx25NxTP	SJxx25Nx	1.6g	Tube	500 (50 per tube)
SJxx25NxRP	SJxx25Nx	1.6g	Embossed Carrier	500

Note: xx=voltage/10, x=sensitivity

©2018 Littelfuse, Inc
Specifications are subject to change without notice.

Revised: 07/25/18

TO-263 Embossed Carrier Reel Pack (RP) Specifications

Meets all EIA-481-2 Standards

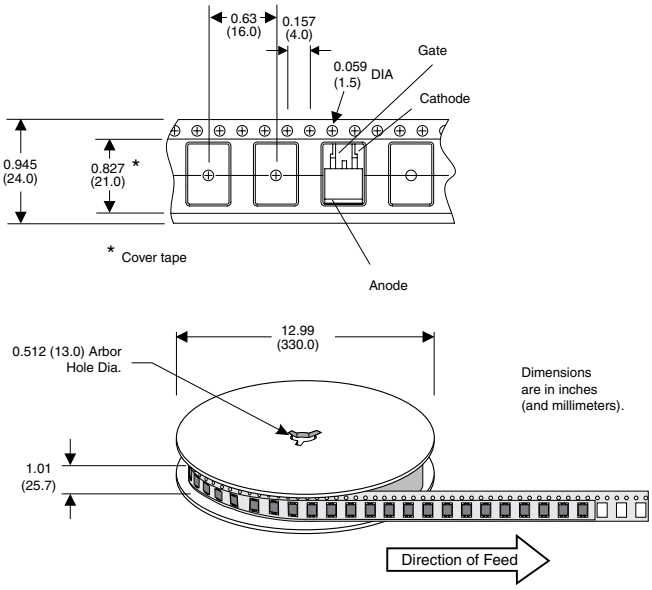

Part Numbering System

SJ 60 25 R 1 TP

COMPONENT TYPE
SJ: high temperature SCR

VOLTAGE RATING
40: 400V
60: 600V

CURRENT RATING
25: 25A

PACKING TYPE
TP: Tube Pack
RP: Reel Pack

SENSITIVITY & TYPE
[bank]:35mA
1: 6mA
2:10mA

PACKAGE TYPE
L: TO-220 Isolated
R: TO-220 Non-Isolated
N: TO-263 (D^2-Pak)

Part Marking System

TO-220 AB - (L and R Package)
TO-263 AB - (N Package)

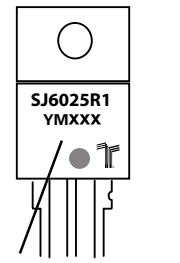

Date Code Marking
Y:Year Code
M: Month Code
XXX: Lot Trace Code

Disclaimer Notice - Information furnished is believed to be accurate and reliable. However, users should independently evaluate the suitability of and test each product selected for their own applications. Littelfuse products are not designed for, and may not be used in, all applications.
Read complete Disclaimer Notice at http://www.littelfuse.com/disclaimer-electronics.

©2018 Littelfuse, Inc
Specifications are subject to change without notice.

Revised: 07/25/18

ООО «ЛайфЭлектроникс» “LifeElectronics” LLC

ИНН 7805602321 КПП 780501001 Р/С 40702810122510004610 ФАКБ "АБСОЛЮТ БАНК" (ЗАО) в г.Санкт-Петербурге К/С 30101810900000000703 БИК 044030703

Компания «Life Electronics» занимается поставками электронных компонентов импортного и отечественного производства от производителей и со складов крупных дистрибьюторов Европы, Америки и Азии.

С конца 2013 года компания активно расширяет линейку поставок компонентов по направлению коаксиальный кабель, кварцевые генераторы и конденсаторы (керамические, пленочные, электролитические), за счёт заключения дистрибьюторских договоров

Мы предлагаем:

- *Конкурентоспособные цены и скидки постоянным клиентам.*
- *Специальные условия для постоянных клиентов.*
- *Подбор аналогов.*
- *Поставку компонентов в любых объемах, удовлетворяющих вашим потребностям.*

- *Приемлемые сроки поставки, возможна ускоренная поставка.*
- *Доставку товара в любую точку России и стран СНГ.*
- *Комплексную поставку.*
- *Работу по проектам и поставку образцов.*
- *Формирование склада под заказчика.*

- *Сертификаты соответствия на поставляемую продукцию (по желанию клиента).*
- *Тестирование поставляемой продукции.*
- *Поставку компонентов, требующих военную и космическую приемку.*
- *Входной контроль качества.*
- *Наличие сертификата ISO.*

В составе нашей компании организован Конструкторский отдел, призванный помогать разработчикам, и инженерам.

Конструкторский отдел помогает осуществить:

- *Регистрацию проекта у производителя компонентов.*
- *Техническую поддержку проекта.*
- *Защиту от снятия компонента с производства.*
- *Оценку стоимости проекта по компонентам.*
- *Изготовление тестовой платы монтаж и пусконаладочные работы.*

Тел: +7 (812) 336 43 04 (многоканальный)
Email: org@lifeelectronics.ru

www.lifeelectronics.ru