THIS DRAWING IS UNPUBLISHED. RELEASED FOR PUBLICATION 20
© COPYRIGHT 20 BY - ALL RIGHTS RESERVED.

REVISIONS

P	LTR	DESCRIPTION	DATE	DWN	APVD
	13	REV CAP MATERIAL AND 1.9 DIM IN DETAIL C	13DEC2016	MS	DH
	14	REVISED CARD EDGE LAYOUT, ADD NOTE 6	14DEC2016	MS	DH
	15	ADDED 0.35 DIMENSION TO DETAIL C	31MAR2017	MS	DH
	A	REVISED PER ECO-17-016167	16NOV2017	AP	EB

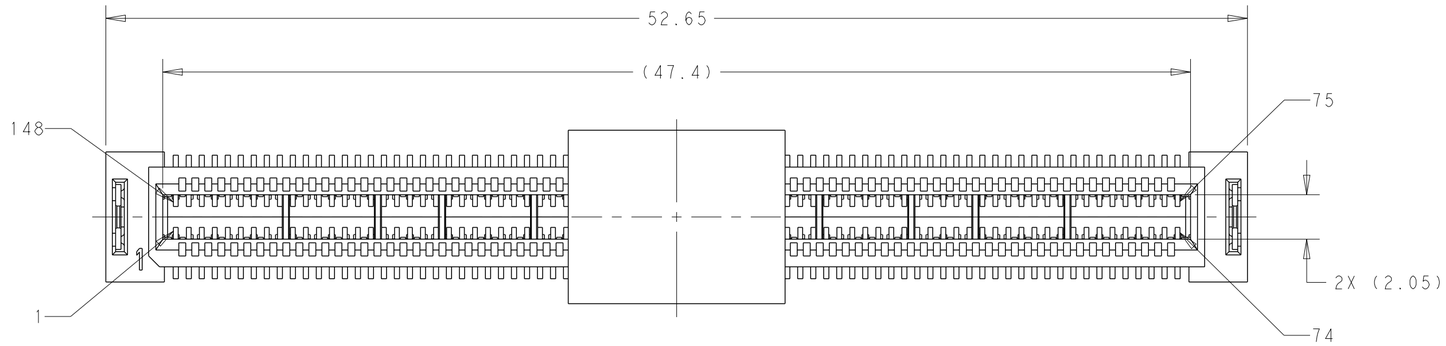

1. HOUSING AND CONTACT OVERMOLD: LCP, BLACK.
   CONTACTS: COPPER ALLOY.
   HOLD DOWN: COPPER ALLOY, TIN PLATED.
   PICK AND PLACE TAPE: POLYIMIDE FILM.
   PICK AND PLACE CAP: LCP 30, BLACK.
2. GOLD PLATED ON MATING INTERFACE. TIN PLATED ON SOLDER TAILS.
3. DATUM AND BASIC DIMENSION ESTABLISHED BY CUSTOMER.
4. DESIGNED FOR A 1.5 MIN THICK PC BOARD.
5. RECOMMENDED COMPONENT KEEP OUT AREA.
6. DATE CODE MARKED IN APPROXIMATE AREA SHOWN.

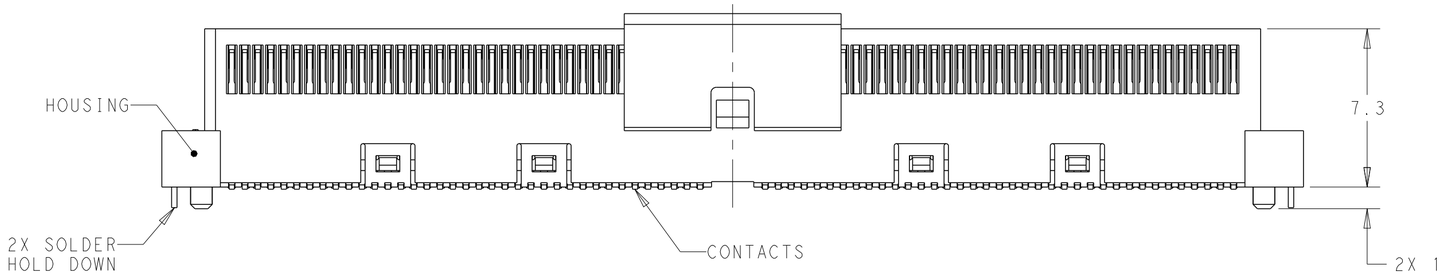

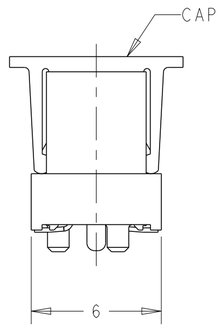

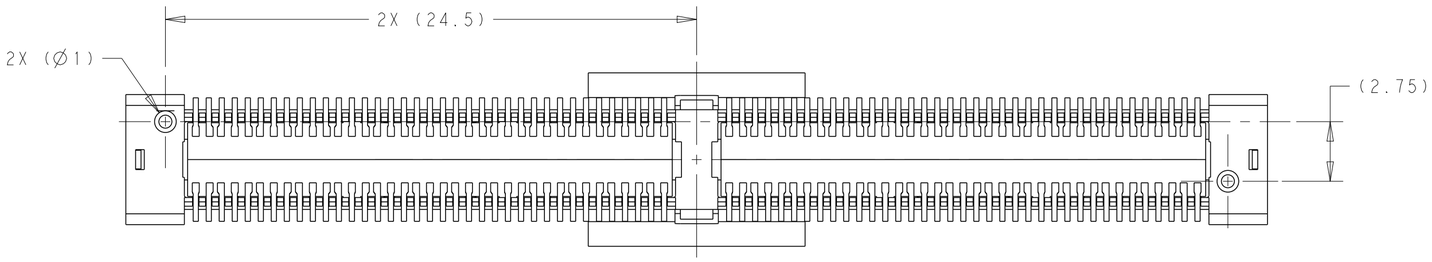

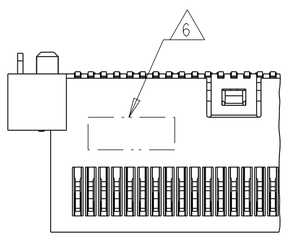

PACKAGING	PART NUMBER
TAPE & REEL WITH PICK AND PLACE TAPE	2297117-1
TAPE & REEL WITH PICK AND PLACE CAP	2297117-2

THIS DRAWING IS A CONTROLLED DOCUMENT.

DIMENSIONS: mm

TOLERANCES UNLESS OTHERWISE SPECIFIED:
0 PLC ±0.15
1 PLC ±0.15
2 PLC ±0.15
3 PLC ±-
4 PLC ±-
ANGLES ±-

MATERIAL - 1
FINISH - 2

DWN M. SCHMITT 4NOV2015
CHK M. SCHMITT 4NOV2015
APVD -
PRODUCT SPEC -
APPLICATION SPEC -
WEIGHT -

TE Connectivity

NAME RECEPTACLE CONNECTOR, VERTICAL, 148 POSITION, SLIVER .070 CARD EDGE

SIZE A2 | CAGE CODE - | DRAWING NO C-2297117 | RESTRICTED TO -

CUSTOMER DRAWING | SCALE 5:1 | SHEET 1 OF 4 | REV A

1471-9 (3/13)

THIS DRAWING IS UNPUBLISHED. RELEASED FOR PUBLICATION 20
© COPYRIGHT 20 BY - ALL RIGHTS RESERVED.

REVISIONS

P	LTR	DESCRIPTION	DATE	DWN	APVD
	-	SEE SHEET 1	-	-	-

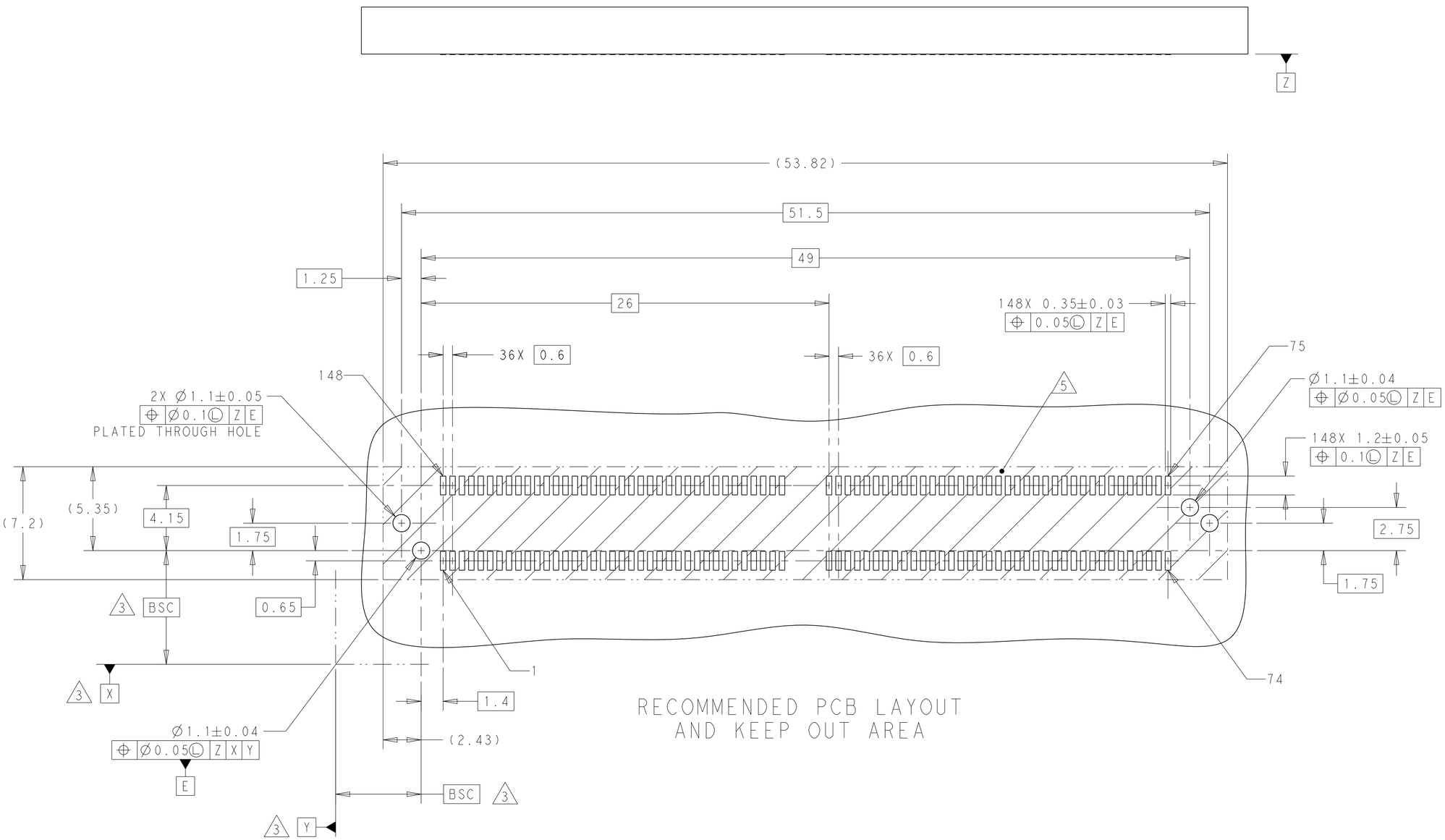

RECOMMENDED PCB LAYOUT
AND KEEP OUT AREA

THIS DRAWING IS A CONTROLLED DOCUMENT.

DIMENSIONS: mm

TOLERANCES UNLESS OTHERWISE SPECIFIED:
0 PLC ±0.15
1 PLC ±0.15
2 PLC ±0.15
3 PLC ±-
4 PLC ±-
ANGLES ±-

MATERIAL - -
FINISH - -

DWN M. SCHMITT 4NOV2015
CHK M. SCHMITT 4NOV2015
APVD -
PRODUCT SPEC -
APPLICATION SPEC -
WEIGHT -

TE Connectivity

NAME
RECEPTACLE CONNECTOR,
VERTICAL, 148 POSITION, SLIVER
.070 CARD EDGE

SIZE	CAGE CODE	DRAWING NO	RESTRICTED TO
A2	-	C-2297117	-

CUSTOMER DRAWING | SCALE 5:1 | SHEET 2 OF 4 | REV A

THIS DRAWING IS UNPUBLISHED. RELEASED FOR PUBLICATION 20
© COPYRIGHT 20 BY - ALL RIGHTS RESERVED.

REVISIONS

P	LTR	DESCRIPTION	DATE	DWN	APVD
	-	SEE SHEET 1	-	-	-

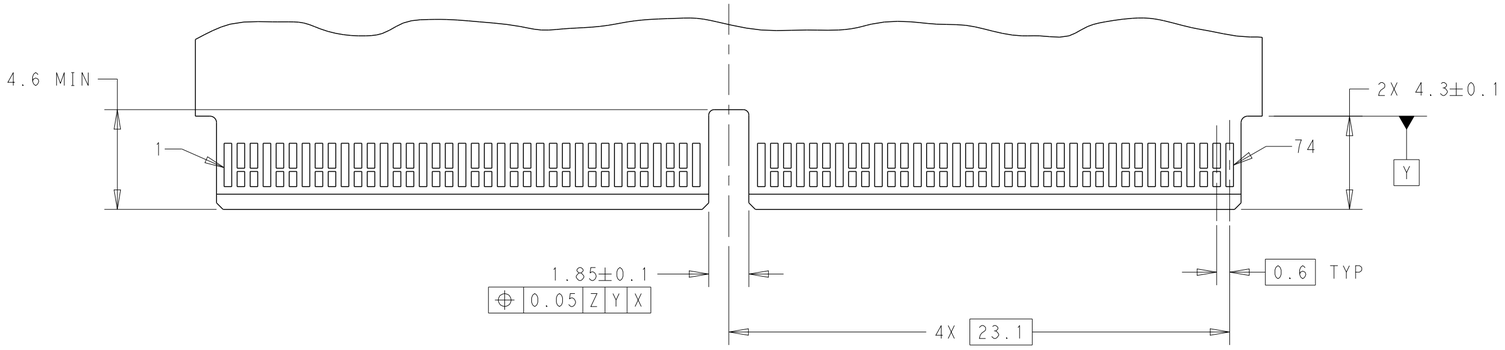

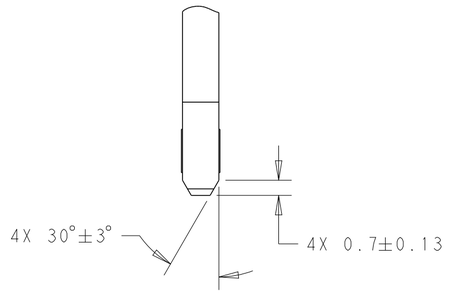

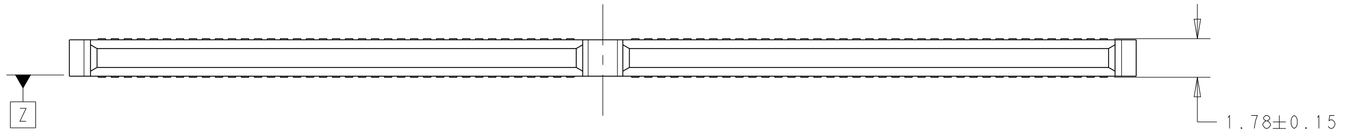

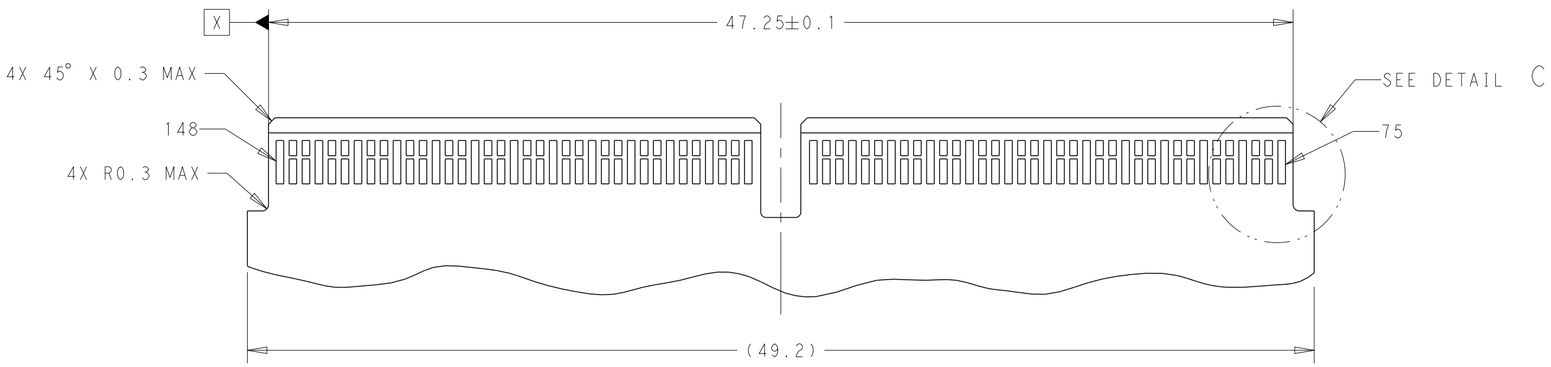

RECOMMENDED CARD EDGE LAYOUT

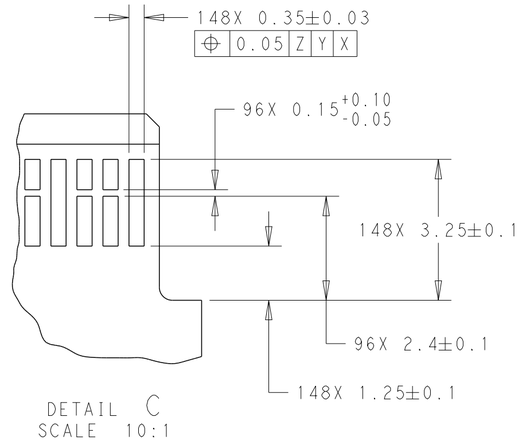

DETAIL C
SCALE 10:1

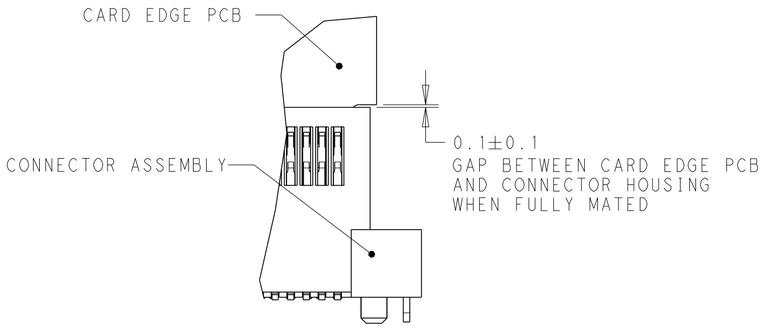

SCALE 6:1
CARD EDGE PCB SHOWN MATED TO CONNECTOR ASSEMBLY

THIS DRAWING IS A CONTROLLED DOCUMENT.	DWN M. SCHMITT 4NOV2015	TE Connectivity	
DIMENSIONS: mm / TOLERANCES UNLESS OTHERWISE SPECIFIED: 0 PLC ±0.15, 1 PLC ±0.15, 2 PLC ±0.15, 3 PLC ±-, 4 PLC ±-, ANGLES ±-	CHK M. SCHMITT 4NOV2015	NAME RECEPTACLE CONNECTOR, VERTICAL, 148 POSITION, SLIVER .070 CARD EDGE	
	APVD -		
	PRODUCT SPEC -		
	APPLICATION SPEC -	SIZE A2 / CAGE CODE -	DRAWING NO C-2297117 / RESTRICTED TO -
MATERIAL - / FINISH -	WEIGHT -		
	CUSTOMER DRAWING	SCALE 5:1 / SHEET 3 OF 4	REV A

1471-9 (3/13)

THIS DRAWING IS UNPUBLISHED. RELEASED FOR PUBLICATION 20
© COPYRIGHT 20 BY - ALL RIGHTS RESERVED.

REVISIONS

P	LTR	DESCRIPTION	DATE	DWN	APVD
	-	SEE SHEET 1	-	-	-

PIN #	DESCRIPTION	PIN #	DESCRIPTION
1	SIGNAL GROUND	75	SIGNAL GROUND
2	SIGNAL	76	SIGNAL
3	SIGNAL	77	SIGNAL
4	SIGNAL GROUND	78	SIGNAL GROUND
5	SIGNAL	79	SIGNAL
6	SIGNAL	80	SIGNAL
7	SIGNAL GROUND	81	SIGNAL GROUND
8	SIGNAL	82	SIGNAL
9	SIGNAL	83	SIGNAL
10	SIGNAL GROUND	84	SIGNAL GROUND
11	SIGNAL	85	SIGNAL
12	SIGNAL	86	SIGNAL
13	SIGNAL GROUND	87	SIGNAL GROUND
14	SIGNAL	88	SIGNAL
15	SIGNAL	89	SIGNAL
16	SIGNAL GROUND	90	SIGNAL GROUND
17	SIGNAL	91	SIGNAL
18	SIGNAL	92	SIGNAL
19	SIGNAL GROUND	93	SIGNAL GROUND
20	SIGNAL	94	SIGNAL
21	SIGNAL	95	SIGNAL
22	SIGNAL GROUND	96	SIGNAL GROUND
23	SIGNAL	97	SIGNAL
24	SIGNAL	98	SIGNAL
25	SIGNAL GROUND	99	SIGNAL GROUND
26	SIGNAL	100	SIGNAL
27	SIGNAL	101	SIGNAL
28	SIGNAL GROUND	102	SIGNAL GROUND
29	SIGNAL	103	SIGNAL
30	SIGNAL	104	SIGNAL
31	SIGNAL GROUND	105	SIGNAL GROUND
32	SIGNAL	106	SIGNAL
33	SIGNAL	107	SIGNAL
34	SIGNAL GROUND	108	SIGNAL GROUND
35	SIGNAL	109	SIGNAL
36	SIGNAL	110	SIGNAL
37	SIGNAL GROUND	111	SIGNAL GROUND

PIN #	DESCRIPTION	PIN #	DESCRIPTION
38	SIGNAL GROUND	112	SIGNAL GROUND
39	SIGNAL	113	SIGNAL
40	SIGNAL	114	SIGNAL
41	SIGNAL GROUND	115	SIGNAL GROUND
42	SIGNAL	116	SIGNAL
43	SIGNAL	117	SIGNAL
44	SIGNAL GROUND	118	SIGNAL GROUND
45	SIGNAL	119	SIGNAL
46	SIGNAL	120	SIGNAL
47	SIGNAL GROUND	121	SIGNAL GROUND
48	SIGNAL	122	SIGNAL
49	SIGNAL	123	SIGNAL
50	SIGNAL GROUND	124	SIGNAL GROUND
51	SIGNAL	125	SIGNAL
52	SIGNAL	126	SIGNAL
53	SIGNAL GROUND	127	SIGNAL GROUND
54	SIGNAL	128	SIGNAL
55	SIGNAL	129	SIGNAL
56	SIGNAL GROUND	130	SIGNAL GROUND
57	SIGNAL	131	SIGNAL
58	SIGNAL	132	SIGNAL
59	SIGNAL GROUND	133	SIGNAL GROUND
60	SIGNAL	134	SIGNAL
61	SIGNAL	135	SIGNAL
62	SIGNAL GROUND	136	SIGNAL GROUND
63	SIGNAL	137	SIGNAL
64	SIGNAL	138	SIGNAL
65	SIGNAL GROUND	139	SIGNAL GROUND
66	SIGNAL	140	SIGNAL
67	SIGNAL	141	SIGNAL
68	SIGNAL GROUND	142	SIGNAL GROUND
69	SIGNAL	143	SIGNAL
70	SIGNAL	144	SIGNAL
71	SIGNAL GROUND	145	SIGNAL GROUND
72	SIGNAL	146	SIGNAL
73	SIGNAL	147	SIGNAL
74	SIGNAL GROUND	148	SIGNAL GROUND

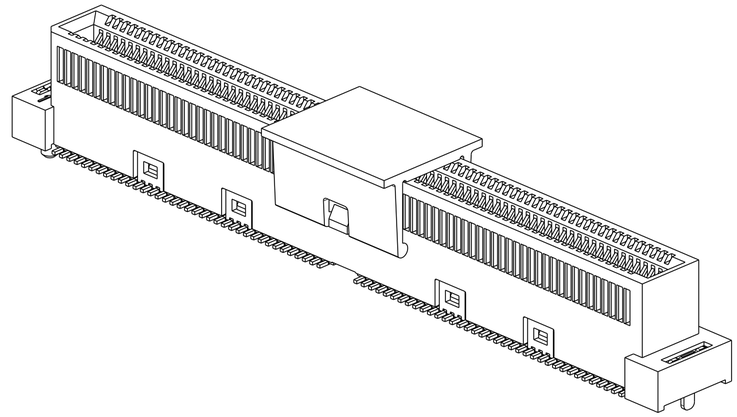

2297117-2
WITH PICK AND PLACE CAP
SCALE 4:1

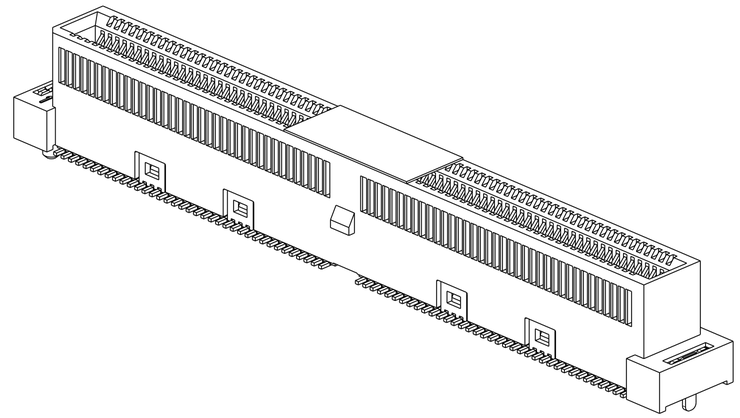

2297117-1
WITH PICK AND PLACE TAPE
SCALE 4:1

THIS DRAWING IS A CONTROLLED DOCUMENT.

DIMENSIONS: mm

TOLERANCES UNLESS OTHERWISE SPECIFIED:
0 PLC ±0.15
1 PLC ±0.15
2 PLC ±0.15
3 PLC ±-
4 PLC ±-
ANGLES ±-

MATERIAL - -
FINISH - -

DWN M. SCHMITT 4NOV2015
CHK M. SCHMITT 4NOV2015
APVD - -
PRODUCT SPEC -
APPLICATION SPEC -
WEIGHT -

CUSTOMER DRAWING

TE Connectivity

NAME
RECEPTACLE CONNECTOR, VERTICAL, 148 POSITION, SLIVER .070 CARD EDGE

SIZE	CAGE CODE	DRAWING NO	RESTRICTED TO
A2	-	C-2297117	-

SCALE 5:1 SHEET 4 OF 4 REV A

ООО «ЛайфЭлектроникс» “LifeElectronics” LLC

ИНН 7805602321 КПП 780501001 Р/С 40702810122510004610 ФАКБ "АБСОЛЮТ БАНК" (ЗАО) в г.Санкт-Петербурге К/С 30101810900000000703 БИК 044030703

Компания «Life Electronics» занимается поставками электронных компонентов импортного и отечественного производства от производителей и со складов крупных дистрибьюторов Европы, Америки и Азии.

С конца 2013 года компания активно расширяет линейку поставок компонентов по направлению коаксиальный кабель, кварцевые генераторы и конденсаторы (керамические, пленочные, электролитические), за счёт заключения дистрибьюторских договоров

Мы предлагаем:

- *Конкурентоспособные цены и скидки постоянным клиентам.*
- *Специальные условия для постоянных клиентов.*
- *Подбор аналогов.*
- *Поставку компонентов в любых объемах, удовлетворяющих вашим потребностям.*

- *Приемлемые сроки поставки, возможна ускоренная поставка.*
- *Доставку товара в любую точку России и стран СНГ.*
- *Комплексную поставку.*
- *Работу по проектам и поставку образцов.*
- *Формирование склада под заказчика.*

- *Сертификаты соответствия на поставляемую продукцию (по желанию клиента).*
- *Тестирование поставляемой продукции.*
- *Поставку компонентов, требующих военную и космическую приемку.*
- *Входной контроль качества.*
- *Наличие сертификата ISO.*

В составе нашей компании организован Конструкторский отдел, призванный помогать разработчикам, и инженерам.

Конструкторский отдел помогает осуществить:

- *Регистрацию проекта у производителя компонентов.*
- *Техническую поддержку проекта.*
- *Защиту от снятия компонента с производства.*
- *Оценку стоимости проекта по компонентам.*
- *Изготовление тестовой платы монтаж и пусконаладочные работы.*

Тел: +7 (812) 336 43 04 (многоканальный)
Email: org@lifeelectronics.ru

www.lifeelectronics.ru