Honeywell
THE POWER OF **CONNECTED**

Honeywell Zephyr™ Digital Airflow Sensors

HAF Series—High Accuracy: 10 SLPM, 15 SLPM, 20 SLPM, 50 SLPM, 100 SLPM, 200 SLPM, 300 SLPM

008268
Issue 5

Datasheet

DESCRIPTION

Honeywell Zephyr™ HAF Series sensors provide a digital interface for reading airflow over specified full-scale flow and compensated temperature ranges. The thermally isolated heater and temperature sensing elements help these sensors provide a fast response to air or gas flow. Zephyr sensors are designed to measure mass flow of air and other non-corrosive gases. Standard flow ranges are 10 SLPM, 15 SLPM, 20 SLPM, 50 SLPM, 100 SLPM, 200 SLPM and 300 SLPM, with custom flow ranges available. The sensors are fully calibrated and temperature compensated with an onboard Application Specific Integrated Circuit (ASIC). The HAF Series >10 SLPM is compensated over the calibrated temperature range of 0°C to 50°C [32°F to 122°F]. The state-of-the-art ASIC-based compensation provides digital (I^2C) outputs with a response time of 1 ms. These sensors operate on the heat transfer principle to measure mass airflow. They consist of a microbridge Microelectronic and Microelectromechanical System (MEMS) with temperature-sensitive resistors deposited with thin films of platinum and silicon nitride. The MEMS sensing die is located in a precise and carefully designed airflow channel to provide repeatable response to flow. Zephyr sensors provide the customer with enhanced reliability, high accuracy, repeatable measurements and the ability to customize sensor options to meet many specific application needs. The combination of rugged housings with a stable substrate makes these products extremely robust. They are designed and manufactured according to ISO 9001 standards.

VALUE TO CUSTOMERS

- Precise measurement: The industry's smallest Total Error Band, fast response time, and high accuracy provide precise measurement and high performance in the customer's application.
- Saves time: Configurable and customizable with a choice of port styles simplifies design and reduces production time.
- Cost-effective: Reduces printed circuit board (PCB) size and overall design and production costs.

FEATURES

- Fast response time (1 ms) allows the customer's application to respond quickly to a change in airflow, important in critical medical (e.g., anesthesia) and industrial (e.g., fume hood) applications.
- High stability reduces errors due to thermal effects and null shift, providing accurate readings over time and often eliminating the need for system calibration after PCB mount and periodically over time.
- High sensitivity at very low flows provides a fast response time at the onset or cessation of flow.
- High 12-bit resolution increases the ability to sense small airflow changes, allowing customers to more precisely control their application.
- Wide airflow range: The industry's broadest airflow range measures mass flow with standard flow ranges of 0 to10, 0 to 15, 0 to 20, 0 to 50, 0 to 100, 0 to 200 and 0 SLPM to 300 SLPM, or custom flow ranges, increasing the options to integrate the sensor into the application.
- Choice of port styles: Manifold mount, 22 mm OD tapered male fitting, and G 3/8 female threaded fitting provide flexibility to choose the pneumatic connection that is best for the customer's application.
- Linear output provides a more intuitive sensor signal than the raw output of basic airflow sensors, which can help reduce production costs, design, and implementation time.
- Wide supply voltage range (3 Vdc to 10 Vdc) provides a flexible regulated power circuit which allows the designer the flexibility to choose the supply voltage that works best in the system.
- ASIC-based I^2C digital output simplifies integration to microprocessors or microcontrollers, reducing PCB complexity and component count.
- RoHS-compliant materials Meet Directive 2002/95/EC.

POTENTIAL APPLICATIONS

- Medical: Anesthesia delivery machines, ventilators, ventricular assist devices (heart pumps), spirometers, laparoscopy
- Industrial: Analytic instrumentation (spectrometry, chromatrography), air-to-fuel ratio, fuel cells, fume hoods, gas leak detection, process control gas monitoring, vacuum pump monitoring

PORTFOLIO

The Honeywell Zephyr Digital Airflow Sensors join an extensive line of airflow sensors for potential use in medical, industrial, and consumer applications.

Figure 1. Total Error Band vs. Accuracy

Other airflow sensor manufacturers only report on accuracy, while Honeywell reports Total Error Band.

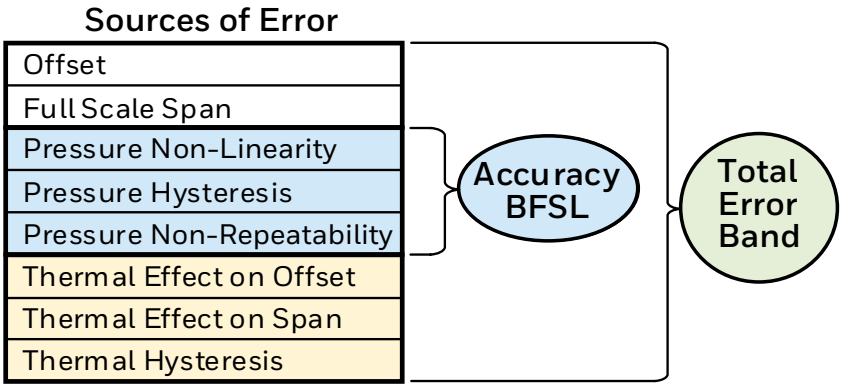

HIGH ACCURACY

Ideal for use in demanding applications that require high accuracy.

– 0%FS to 14.3%FS = 0.5%FS

– 14.3%FS to 100%FS = 3.5%reading

TOTAL ERROR BAND (TEB)*

Honeywell specifies TEB, the most comprehensive, clear, and meaningful measurement that provides the sensor's true accuracy (see Figure 1). TEB allows for precise airflow measurement, often ideal for demanding applications with high accuracy requirements for precise airflow measurement.

- 10, 15, 20, 50, 100, 200 SLPM:
  – 0%FS to 12.5%FS = 0.5%FS
  – 12.5%FS to 100%FS = 4.0%reading
- 300 SLPM only:
  – 0%FS to 12.5%FS = 0.5%FS
  – 12.5%FS to 66.7%FS = 4.0%reading
  – 66.7%FS to 100%FS = 7.0%reading

Table 1. Absolute Maximum Ratings[1]

Characteristic	Parameter
Supply voltage	-0.3 Vdc to 11.0 Vdc
Voltage on digital I/O output pins	-0.3 Vdc to 3.0 Vdc[2]
Storage temperature range	-40°C to 100°C [-40°F to 212°F]
Maximum flow change	10,000 SLPM/s
Maximum common mode pressure	4 bar | 60 psi at 25°C [77°F]
Maximum flow	350 SLPM

[1]Absolute maximum ratings are the extreme limits that the device will withstand without damage to the device. However, the electrical and mechanical characteristics are not guaranteed as the maximum limits (above recommended operating conditions) are approached, nor will the device necessarily operate at absolute maximum ratings.

[2]Digital I/O pins are diode protected at this voltage up to 2 mA. Digital bus voltage may exceed this value if the maximum digital bus current is limited to 2 mA or less. The maximum bus current is generally determined by the bus pull-up resistors

CAUTION

IMPROPER USE

Do not use these products to sense liquid flow.

Failure to comply with these instructions may result in product damage.

CAUTION

PRODUCT DAMAGE

Do not dissamble these products.

Failure to comply with these instructions may result in product damage.

Table 2. Operating Specifications

Characteristic	Parameter
Supply voltage	3 Vdc to 10 Vdc
Supply current	20 mA max.
Power: 3 Vdc 10 Vdc	 60 mW max. 200 mW max.
Calibrated temperature range[1]	0°C to 50°C [32°F to 122°F]
Operating temperature range	-20°C to 70°C [-4°F to 158°F]
Full scale (FS) flow[2]	10, 15, 20, 50, 100, 200, 300 SLPM
Calilbrated flow range	0 to 10, 0 to 15, 0 to 20, 0 to 50, 0 to 100, 0 to 200, 0 SLPM to 300 SLPM
Calibration gas	clean, dry air
Accuracy[3] 0%FS to 14.3%FS 14.3%FS to 100%FS	 0.5%FS 3.5%reading
Total Error Band:[4] 10, 15, 20, 50, 100, 200 SLPM: 0%FS to 12.5%FS 12.5%FS to 100%FS 300 SLPM only: 0%FS to 12.5%FS 12.5%FS to 66.7%FS 66.7%FS to 100%FS	 0.5%FS 4.0%reading 0.5%FS 4.0%reading 7.0%reading
Null accuracy[5]	±0.5%FS
Flow response time[6]	1 ms
Warm up time[7]	35 ms
Resolution: 10 SLPM 15 SLPM 20 SLPM 50 SLPM 100 SLPM 200 SLPM 300 SLPM	 0.002 SLPM 0.003 SLPM 0.003 SLPM 0.008 SLPM 0.015 SLPM 0.029 SLPM 0.043 SLPM
Proof pressure	10.3 bar | 150 psig
Burst pressure	13.7 bar | 200 psig
Bus standards[8]	I^2C fast mode (up to 400 kHz)
Reverse polarity protection	no

[1] Custom and extended temperature compensated ranges are possible. Contact Honeywell for details.

[2] Honeywell standard for mass flow rate units is SLPM, which has reference conditions of 0°C and 1 atm. Custom units are given as LPM with listed reference conditions at the first mention.

[3] Accuracy is the maximum deviation in output from nominal over the entire calibrated flow range at 25°C. Errors include Offset, Full Scale Span, Linearity, Flow Hysteresis, and Repeatability.

[4] Total Error Band (TEB) is the maximum deviation in output from nominal over the entire calibrated flow range and temperature range. Total Error Band includes all Accuracy errors, as well as all temperature effects over the compensated temperature range, including Temperature Offset, Temperature Span and Thermal Hysteresis.

[5] Null Accuracy is the maximum deviation in output from nominal at null flow over the entire calibrated temperature range.

[6] Response time: time to electrically respond to any mass flow change at the microbridge airflow transducer (response time of the transducer may be affected by the pneumatic interface).

[7] Warm-up time: time to the first valid flow measurement after power is applied.

[8] Refer to the Technical Note "I^2C Communications with Honeywell Digital Airflow Sensors" for I^2C protocol information.

Table 3. Environmental Specifications

Characteristic	Parameter
Humidity	0% to 95% RH, non-condensing
Shock	30 g, 6 ms
Vibration	1,33 g at 10 Hz to 500 Hz
ESD	ESD IEC6100-4-2 air discharge up to 8 kV, or direct contact discharge up to 4 kV
Radiated immunity: 20, 50, 100, 200, 300 SLPM 10, 15 SLPM	Level 3 from 80 MHz to 1000 MHz per IEC61000-4-3 1 m shielded cable with 3 cm exposed leads at connector 1 m shielded cable with 3 cm exposed leads at connector and 280 Ohm at MHz ferrite bead

Table 4. Materials Specifications

Characteristic	Parameter
Wetted materials	glass reinforced (GR) thermoplastic polymer, gold, silicon, silicon dioxide, silicon nitride, epoxy, PCB epoxy composite
Housing	GR thermoplastic polymer
Substrate	PCB
Adhesives	epoxy
Electronic components	silicon, gold
Compliance	RoHS, WEEE

Table 5. Recommended Mounting and Implementation

Characteristic	Parameter
Mounting screw size	10-32
Mounting screw torque	1,13 N m [20 in-lb]
Electrical connection	6 pin SIP connector
Pneumatic connection	manifold mount, 22 mm OD tapered male fitting, G 3/8 female threaded fitting

Figure 2. Nomenclature and Order Guide[1]

For example, **HAFUHM0020L4AXT** defines a Honeywell Zephyr™ Airflow Sensor, unidirectional flow, long port, manifold mount, 20 SLPM, I²C output with custom 0x49 address, 10% to 90% transfer function, 3 Vdc to 10 Vdc supply voltage.

HAF	U	HM	0020	L	4	A	X	T
Product Series	Flow Direction	Port Style	Flow Range	Unit	Output Format	Transfer Function	Reserved for Future Use	Supply Voltage
HAF Series—High Accuracy Airflow Sensor	**U** Unidirectional	**HM** Manifold mount	**0010** 10	**L** SLPM	**2** Digital I²C address: 0x29	**A** 10% to 90% of input	**X** XXXXX	**T** 3 Vdc to 10 Vdc
		HH 22 mm OD tapered male fitting per ISO 5356	**0015** 15		**3** Digital I²C address: 0x39			
			0020 20		**4** Digital I²C address: 0x49			
			0050 50		**5** Digital I²C address: 0x59			
		HT G 3/8 female threaded fitting per ISO 1179	**0100** 100		**6** Digital I²C address: 0x69			
			0200 200		**7** Digital I²C address: 0x79			
			0300 300					

[1]Apart from the general configuration required, other customer-specific requirements are also possible. Please contact Honeywell.

Figure 3. All Available Standard Configurations

Manifold mount	22 mm OD tapered male fitting	G 3/8 female threaded fitting

Figure 4. Nominal Digital Output: 10, 15, 20, 50, 100, 200, 300 SLPM

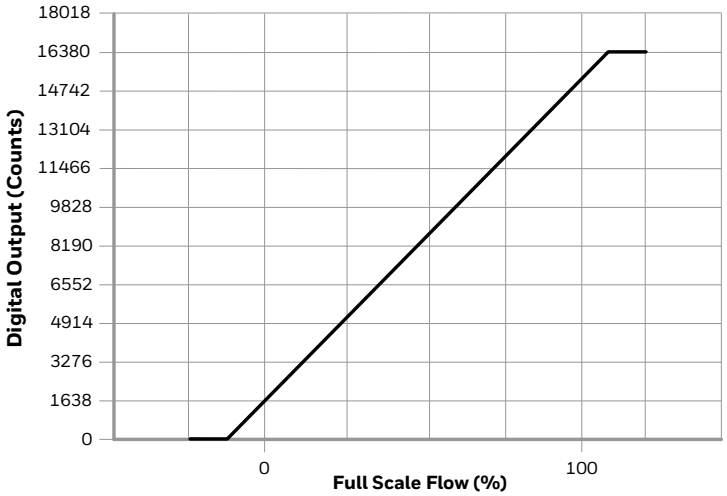

Figure 5. Accuracy and Total Error Band

10, 15, 20, 50, 100, 200 SLPM

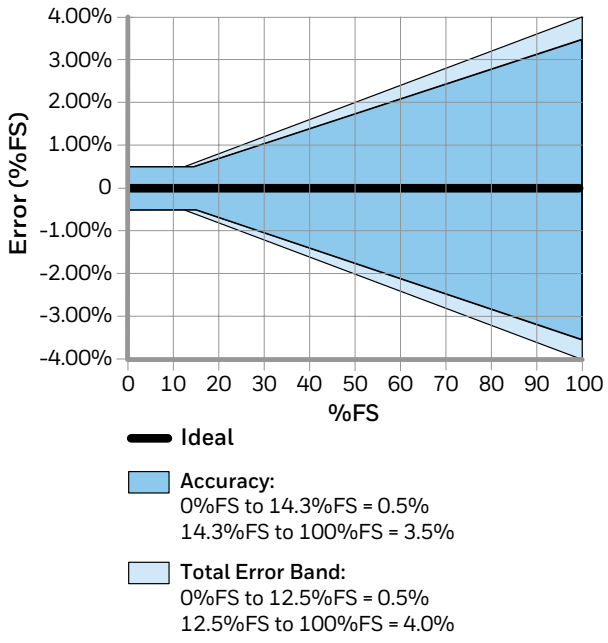

300 SLPM only

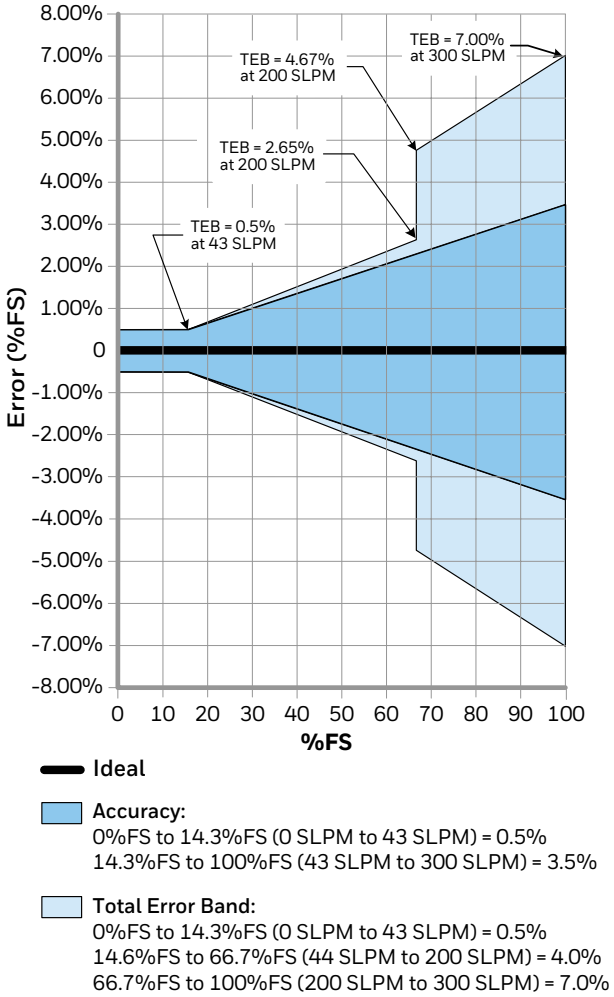

Figure 6. Flow vs Pressure Drop: 10, 15, 20, 50, 100, 200, 300 SLPM

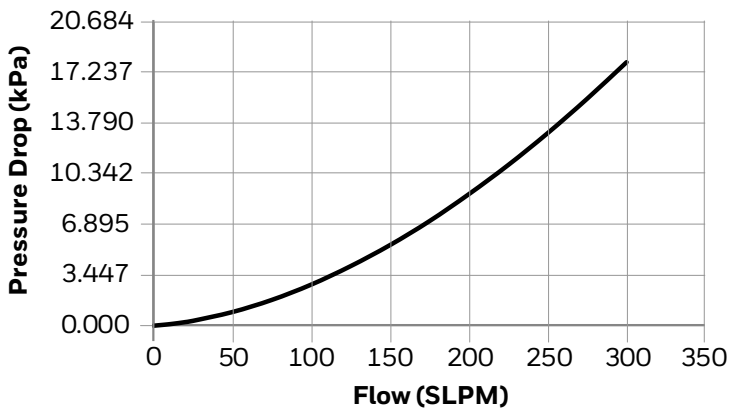

Flow (SLPM)	Typical Pressure Drop		
	mbar	inH_2O	kPa
0	0.000	0.000	0.000
1	0.103	0.042	0.010
2	0.206	0.082	0.021
4	0.396	0.159	0.040
8	0.803	0.322	0.080
10	1.027	0.412	0.103
12	1.279	0.513	0.128
14	1.549	0.621	0.155
15	1.686	0.676	0.169
16	1.820	0.730	0.182
18	2.126	0.853	0.213
20	2.444	0.980	0.244
25	3.320	1.332	0.332
50	9.314	3.736	0.931
75	17.553	3.736	1.755
100	27.979	3.736	2.798
125	40.533	3.736	4.053
150	54.881	22.017	5.488
175	71.158	28.546	7.116
200	89.506	35.907	8.951
225	109.363	43.873	10.936
250	131.037	52.568	13.104
275	154.389	61.936	15.439
300	179.235	71.904	17.924

Table 6. Ideal Transfer Function

Item	Equation
Digital Output Code	16384 * [0.1 + 0.8 * (Flow Applied/Full Scale Flow)]
Flow Applied	Full Scale Flow * [(Digital Output Code/16384) - 0.1]/0.8

Digital Interface

For additional details on the use of Zephyr with digital output see the Technical Note "I^2C Communications with Honeywell Digital Airflow Sensors".

The sensor uses the I^2C standard for digital communication with a slave address specified in the Nomenclature and Order Guide in Figure 2. Following sensor power-up, each of the first two read sequences shown in Figure 7 will respond with 2 bytes of the unique 4-byte Serial Number. The first read after power-up will respond with the two most significant bytes of the Serial Number, while the second read will respond with the two least significant bytes of the Serial Number. For reliable performance, allow sensor to be powered for the sensor startup time before performing the first read, then allow a 10 ms command response time before performing the second read.

Figure 7. Sensor I²C Read and Write Sequences

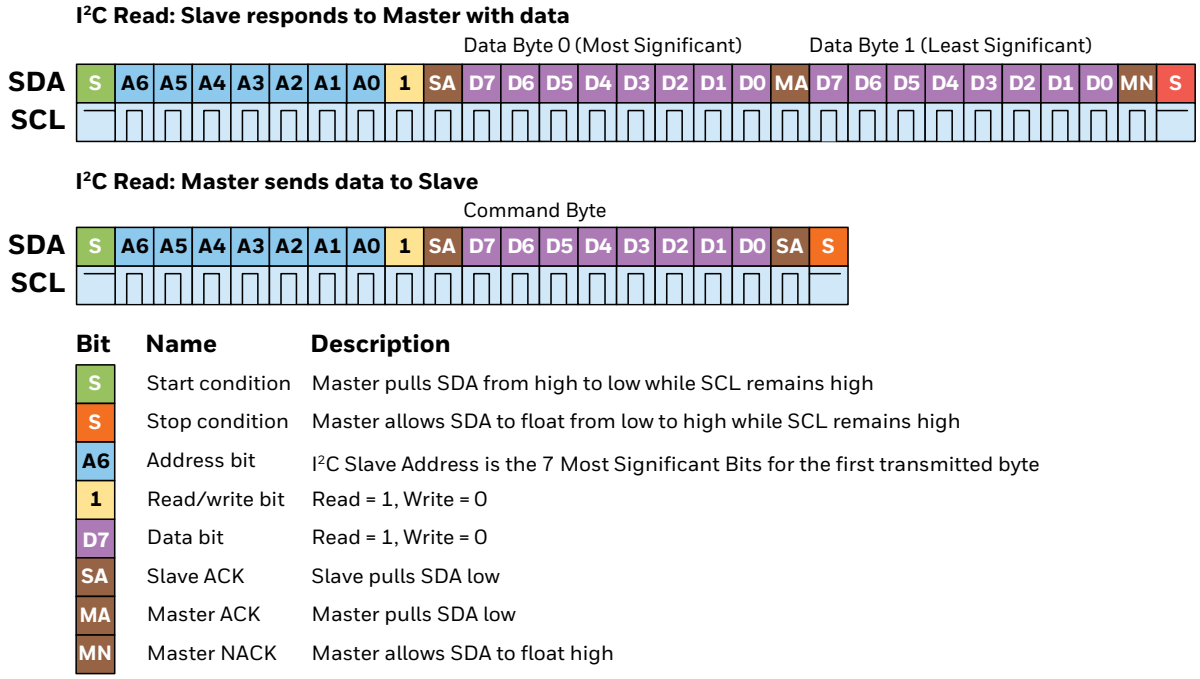

Bit	Name	Description
S	Start condition	Master pulls SDA from high to low while SCL remains high
S	Stop condition	Master allows SDA to float from low to high while SCL remains high
A6	Address bit	I²C Slave Address is the 7 Most Significant Bits for the first transmitted byte
1	Read/write bit	Read = 1, Write = 0
D7	Data bit	Read = 1, Write = 0
SA	Slave ACK	Slave pulls SDA low
MA	Master ACK	Master pulls SDA low
MN	Master NACK	Master allows SDA to float high

After the power-up read sequence described above, the sensor will respond to each I²C read request with a 16-bit (2 byte) digital flow reading. Read requests taken faster than the Response Time (1 ms) are not guaranteed to return fresh data. The first two bits of each flow reading will be '00', while non-flow responses (such as error and status codes) will begin with '11'. There are several user commands available as shown in Table 8. Following an I²C write sequence of a user command, the sensor will respond to the next I²C read request with a 16-bit response. Possible responses to user commands can be seen in Table 9.

Table 8. User Command Descriptions

Command Byte (Hexadecimal)	Command Name	Command Description	Command Response Time (Max.)
0x01	GetSerialNumber	Next two read requests will each return two bytes of the sensor's unique 4-byte Serial Number.	10 ms
0x02	PowerOnReset	Force Power-On reset of sensor microcontroller.	20 ms
0x03	Checksum	Calculates EEPROM Checksum and compares to production Checksum value. If the values match, the next read request will respond with 0xCCA5. Otherwise, the next read will respond with 0xCC90.	1 s

Table 9. Sensor Response Descriptions

Sensor Response (Hexadecimal)	Response Name	Response Description
0xCCA5	POSACK	non-response command was executed successfully
0xCC99	BadCommand	command byte was not recognized
0xCC9A	BadParam	command sent with incorrect parameter bytes
0xCC9B	Failure	command failed during execution
0xCC90	BadChecksum	checksum did not match stored value
0xCCBB	Busy	sensor is busy calculating the checksum value

The maximum sink current on SCL or SDA is 2 mA. Therefore, if the pull-up resistors are biased by VDD, and if VDD reaches the maximum supply voltage of 6 V, then the pull-up resistors for SCL and SDA must be greater than 3.0 kOhm to limit the sink current to 2 mA. The typical value for SCL and SDA pull-up resistors is 4.7 kOhm (this value depends on the bus capacitance and the bus speed).

Figure 8. Mounting Dimensions (For reference only: mm [in].)

Port Style: Manifold Mount

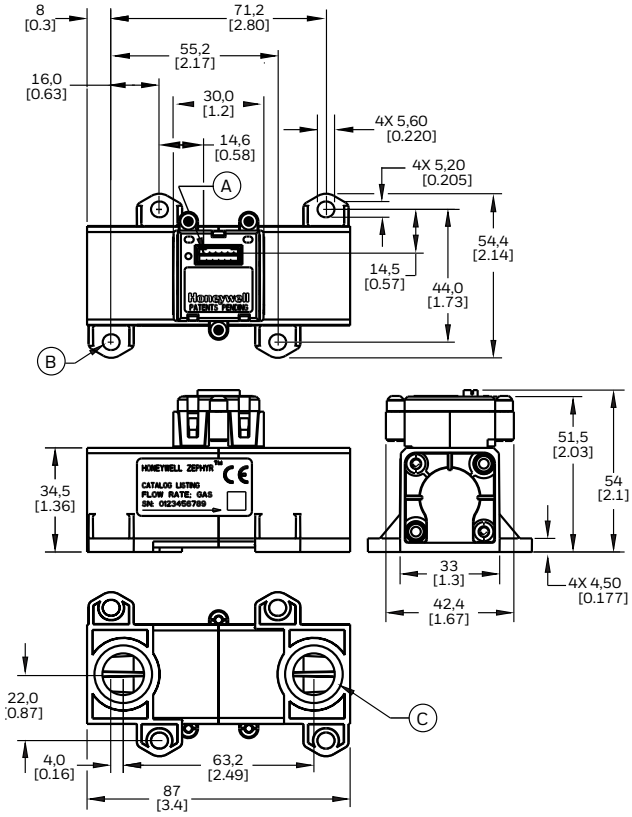

Mounting Footprint

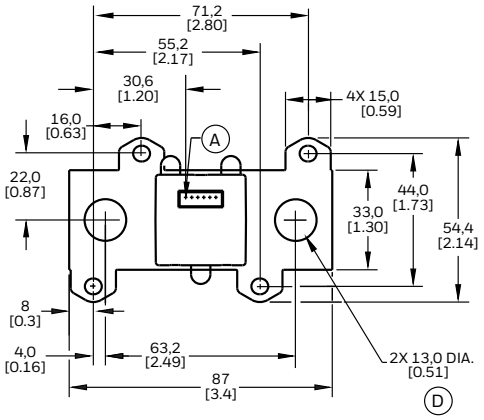

(A) Pin 1.

(B) 4X 10-32 pan head screws 1,13 N m [20 in-lb] torque.

(C) 2X Gland for O-Ring AS568-113, 13,94 mm ID x 2,62 mm [0.549 in ID x 0.103 in W. Two O-rings, AS568A-113 Durometer A65 to A80 Silicon or Viton, are required to seal sensor to manifold. O-rings are not included.

(D) Flow channel.

Port Style: 22 mm OD Tapered Male Fitting per ISO 5356

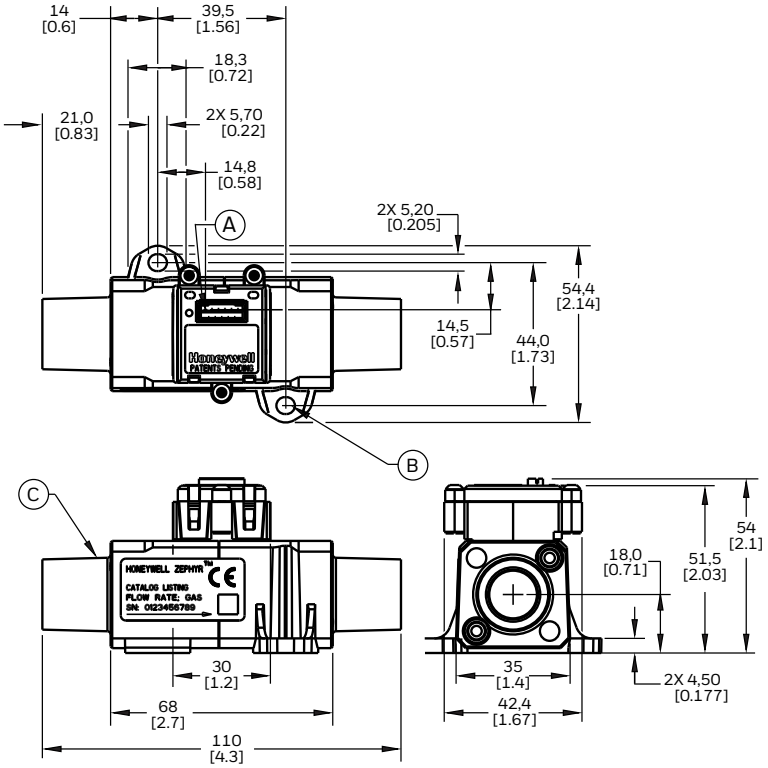

Mounting Footprint

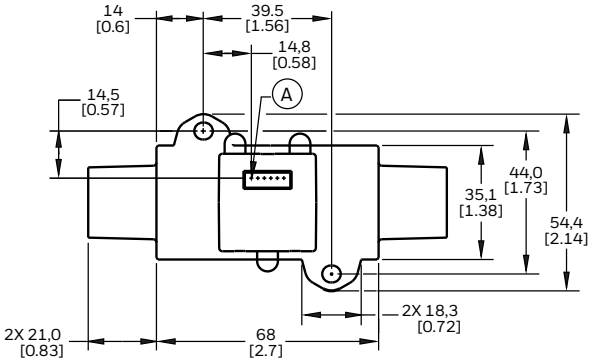

(A) Pin 1.

(B) 2X 10-32 pan head screws 1,13 N m [20 in-lb] torque.

(C) 15 mm ID/22 mm OD tapered fitting per ISO 5356.

Figure 8. Mounting Dimensions (For reference only: mm [in], continued.)

Port Style: G 3/8 Female Threaded Fitting per ISO 1179

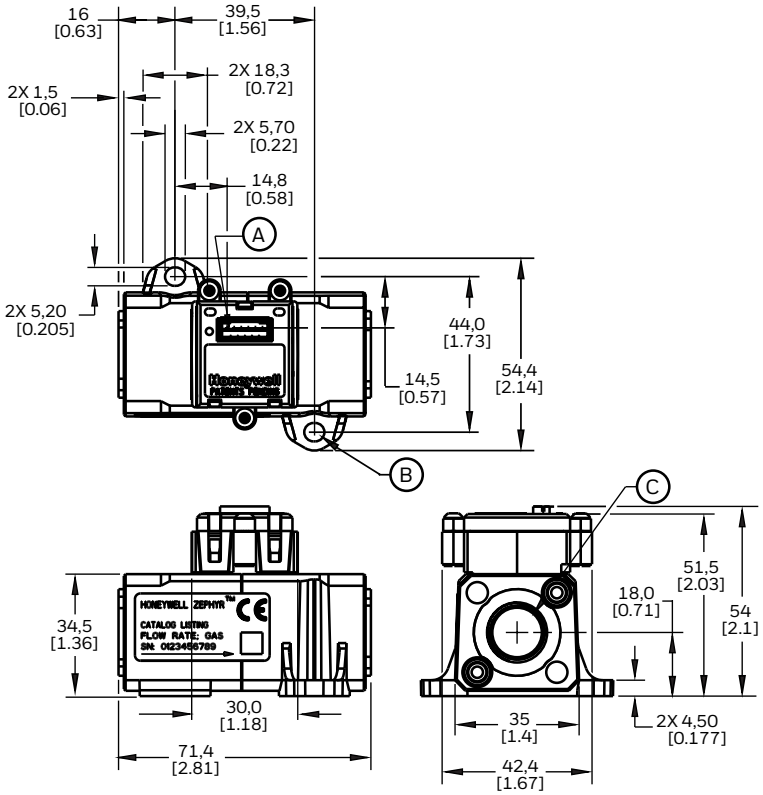

Mounting Footprint

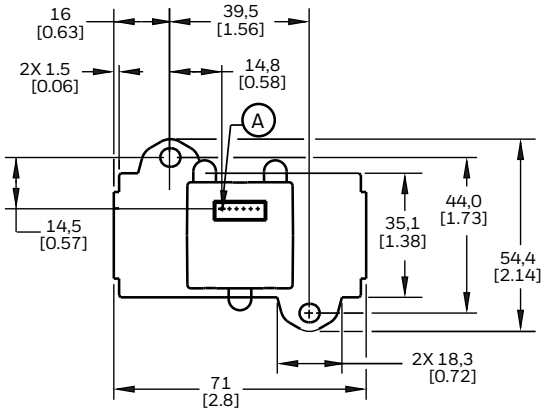

(A) Pin 1.

(B) 2X 10-32 pan head screws 1,13 N m [20 in-lb] torque.

(C) ISO 1179 G3/8, recommended torque is 1,7 ±0,6 N m [15 ±5 in lb]. Electrical connector part number is JST (Japan Solderless Terminals) B6B-PH-K-S. Mating connector part numbers are JST PHR-6 (socket) and JST SPH-002T-P0.5L (crimp terminal).

Table 7. Pinout (Digital Function)

Pin 1	Pin 2	Pin 3	Pin 4	Pin 5	Pin 6
NC	SCL	VVDD	ground	SDA	NC

ADDITIONAL INFORMATION

The following associated literature is available on the Honeywell web site at sensing.honeywell.com:

- Product line guide
- Product range guide
- Technical Information
  - I^2C Communications with Honeywell Digital Airflow Sensors
  - Gas Media Compatibility and Correction Factors
- Application Specific Information

For more information

Honeywell Sensing and Internet of Things services its customers through a worldwide network of sales offices and distributors. For application assistance, current specifications, pricing or the nearest Authorized Distributor, visit sensing.honeywell.com or call:

Asia Pacific	+65 6355-2828
Europe	+44 (0) 1698 481481
USA/Canada	+1-800-537-6945

⚠ WARNING
PERSONAL INJURY

DO NOT USE these products as safety or emergency stop devices or in any other application where failure of the product could result in personal injury.

Failure to comply with these instructions could result in death or serious injury.

⚠ WARNING
MISUSE OF DOCUMENTATION

- The information presented in this datasheet is for reference only. Do not use this document as a product installation guide.
- Complete installation, operation, and maintenance information is provided in the instructions supplied with each product.

Failure to comply with these instructions could result in death or serious injury.

Warranty/Remedy

Honeywell warrants goods of its manufacture as being free of defective materials and faulty workmanship during the applicable warranty period. Honeywell's standard product warranty applies unless agreed to otherwise by Honeywell in writing; please refer to your order acknowledgment or consult your local sales office for specific warranty details. If warranted goods are returned to Honeywell during the period of coverage, Honeywell will repair or replace, at its option, without charge those items that Honeywell, in its sole discretion, finds defective. **The foregoing is buyer's sole remedy and is in lieu of all other warranties, expressed or implied, including those of merchantability and fitness for a particular purpose. In no event shall Honeywell be liable for consequential, special, or indirect damages.**

While Honeywell may provide application assistance personally, through our literature and the Honeywell web site, it is buyer's sole responsibility to determine the suitability of the product in the application.

Specifications may change without notice. The information we supply is believed to be accurate and reliable as of this writing. However, Honeywell assumes no responsibility for its use.

Honeywell Sensing and Internet of Things
9680 Old Bailes Road
Fort Mill, SC 29707
www.honeywell.com

Honeywell

008268-5-EN | 5 | 02/18
© 2018 Honeywell International Inc.

ООО «ЛайфЭлектроникс» “LifeElectronics” LLC

ИНН 7805602321 КПП 780501001 Р/С 40702810122510004610 ФАКБ "АБСОЛЮТ БАНК" (ЗАО) в г.Санкт-Петербурге К/С 30101810900000000703 БИК 044030703

Компания «Life Electronics» занимается поставками электронных компонентов импортного и отечественного производства от производителей и со складов крупных дистрибьюторов Европы, Америки и Азии.

С конца 2013 года компания активно расширяет линейку поставок компонентов по направлению коаксиальный кабель, кварцевые генераторы и конденсаторы (керамические, пленочные, электролитические), за счёт заключения дистрибьюторских договоров

Мы предлагаем:

- *Конкурентоспособные цены и скидки постоянным клиентам.*
- *Специальные условия для постоянных клиентов.*
- *Подбор аналогов.*
- *Поставку компонентов в любых объемах, удовлетворяющих вашим потребностям.*

- *Приемлемые сроки поставки, возможна ускоренная поставка.*
- *Доставку товара в любую точку России и стран СНГ.*
- *Комплексную поставку.*
- *Работу по проектам и поставку образцов.*
- *Формирование склада под заказчика.*

- *Сертификаты соответствия на поставляемую продукцию (по желанию клиента).*
- *Тестирование поставляемой продукции.*
- *Поставку компонентов, требующих военную и космическую приемку.*
- *Входной контроль качества.*
- *Наличие сертификата ISO.*

В составе нашей компании организован Конструкторский отдел, призванный помогать разработчикам, и инженерам.

Конструкторский отдел помогает осуществить:

- *Регистрацию проекта у производителя компонентов.*
- *Техническую поддержку проекта.*
- *Защиту от снятия компонента с производства.*
- *Оценку стоимости проекта по компонентам.*
- *Изготовление тестовой платы монтаж и пусконаладочные работы.*

Тел: +7 (812) 336 43 04 (многоканальный)
Email: org@lifeelectronics.ru

www.lifeelectronics.ru