Panasonic
ideas for life

**MOTION SENSOR (PASSIVE INFRARED TYPE)**

# MP MOTION SENSOR 'NaPiOn'

Standard type

Slight motion detection type

Spot type

10 m detection type

**What is passive infrared type?**

This sensor detects changes in infrared radiation which occur when there is movement by a person (or object) which is different in temperature from the surroundings.

① As this sensor detects temperature differences, it is well suited to detecting the motion of people by their body temperature.

② Wide sensing area.

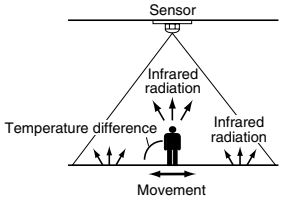


## FEATURES

**1. The world's smallest with a built-in amplifier**

Extremely compact. Ideal for use in miniaturized devices.

**2. Dual lens colors (white and black) are provided**

With an ultrasmall design and dual lens colors (white and black), it is inconspicuous, allowing the user to select either white or black to match the equipment color. This provides greater flexibility in equipment design.

**3. Both digital output and analog output (with adjustable sensitivity) are available.**

**4. Built-in amplifier for easy use**

Has a built-in amplifier, and can be connected directly to a microcomputer.

**• Block diagram of the digital output circuit**

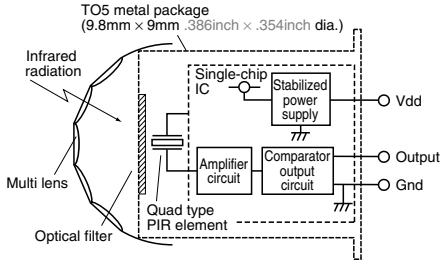


**• Block diagram of the analog output circuit**

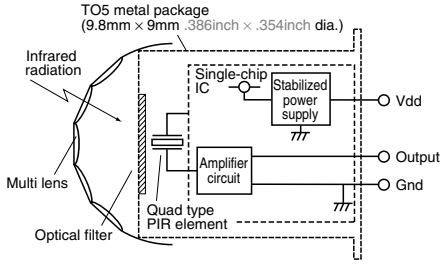


**5. Detects even slight motion of a person**

With our sensor, even slight motions made by people will be detected easily.

**• Fine motion detection capability within approximately 2 meters of sensor.**

Standard type:
Detects movement of approximately 30cm 11.811inch.

Slight motion detection type:
Detects movement of approximately 20cm 7.874inch.

**6. Noise withstanding capability**

Circuitry is contained in a TO5 metal package, providing at least twice the noise withstanding capability as conventional type.

**• Comparison example of noise withstanding capability**

| | Distance at which motion sensor is not affected by cellular phone noise |
|---|---|
| Conventional type | Min. 1 to 2m 3.281 to 6.562ft |
| MP Motion Sensor | Min. 1 to 2cm .394 to .787inch |

**7. A low current consumption type (46 µA) has also been added to the line-up.**

A type that keeps current consumption to 46 µA (less than 30% compared to predecessor) is now available.
Ideal for battery driven devices.

*Digital output type only.

## APPLICATIONS

**1. Home appliances**
Useful for saving energy in air conditioner, television, personal computer, or ventilator and air purifier

**2. Amusement machine market**
Useful for saving energy and for automated guidance in theme parks and large video games

**3. Equipment in service market**
Useful for automated guidance, automated announcements and energy saving in vending machines, ATMs, etc.

**4. Lighting market**
Automated on/off controls, etc. for lamps, desk lamps, indoor lights, halls, stairway lights, etc.

## ORDERING INFORMATION

**AMN** [ ] [ ] 1 [ ] [ ]

Output
1: Digital output
2: Analog output
4: Low current consumption (digital output)

Detection performance
1: Standard detection type
2: Slight motion detection type
3: Spot detection type
4: 10m detection type

Feature
1: PC board mounting type

Operating voltage
1: 5V DC
2: 3V DC

Lens color
1: Black
2: White

# PRODUCT TYPES

### 1. Digital output

| Rated operating voltage | Detection performance | | Ambient temperature | Lens color | Part No. | Packing quantity | |
|---|---|---|---|---|---|---|---|
| | | | | | | Inner | Outer |
| 3 to 6 V DC | Standard detection type | Standard | –20 to +60°C –4 to +140°F | Black | AMN11111 | 50 pcs. | 1,000 pcs. |
| | | | | White | AMN11112 | | |
| | | Low current consumption | | Black | AMN41121 | | |
| | | | | White | AMN41122 | | |
| | Slight motion detection type | Standard | | Black | AMN12111 | | |
| | | | | White | AMN12112 | | |
| | | Low current consumption | | Black | AMN42121 | | |
| | | | | White | AMN42122 | | |
| | Spot detection type | Standard | | Black | AMN13111 | | |
| | | | | White | AMN13112 | | |
| | | Low current consumption | | Black | AMN43121 | | |
| | | | | White | AMN43122 | | |
| | 10m detection type | Standard | | Black | AMN14111 | | |
| | | | | White | AMN14112 | | |
| | | Low current consumption | | Black | AMN44121 | | |
| | | | | White | AMN44122 | | |

### 2. Analog output

| Rated operating voltage | Detection performance | Ambient temperature | Lens color | Part No. | Packing quantity | |
|---|---|---|---|---|---|---|
| | | | | | Inner | Outer |
| 4.5 to 5.5 V DC | Standard detection type | –20 to +60°C –4 to +140°F | Black | AMN21111 | 50 pcs. | 1,000 pcs. |
| | | | White | AMN21112 | | |
| | Slight motion detection type | | Black | AMN22111 | | |
| | | | White | AMN22112 | | |
| | Spot detection type | | Black | AMN23111 | | |
| | | | White | AMN23112 | | |
| | 10m detection type | | Black | AMN24111 | | |
| | | | White | AMN24112 | | |

# PERFORMANCE

### 1. Detection performance

| Items | | Standard detection type | Slight motion detection type | Spot detection type | 10m detection type | Conditions of objects to be detected |
|---|---|---|---|---|---|---|
| Rated detection distance*Remark 1 | | 5m 16.404ft (Max.) | 2m 6.562ft (Max.) | 5m 16.404ft (Max.) | 10m 32.808ft (Max.) | 1. Detectable difference in temperature between the target and background for the spot type is more than 4°C 39.2°F.<br>2. Movement speed<br>• Standard detection type/Spot detection type/ 10m detection type: 0.5 to 1.5 m/s<br>• Slight motion detection type: 0.3 to 1.0 m/s<br>3. Detection object = human body (size is 700mm × 250mm 27.559inch × 9.843inch, but for the slight motion detection type the size is 200mm × 200mm 7.874inch × 7.874inch) |
| Detection range | Horizontal*Remark 2 | 100° | 91° | 38° | 110° | |
| | Vertical*Remark 2 | 82° | 91° | 22° | 93° | |
| | Detection zone*Remark 3 | 64 zones | 104 zones | 24 zones | 80 zones | |

2.

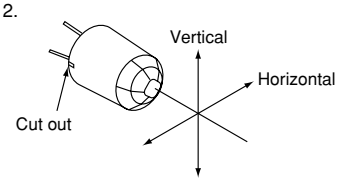


(Standard detection/
Slight motion detection type)

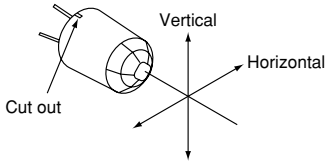


(Spot detection type/
10 m detection type)

*Remarks 1. Depending on the difference in temperature between the background and detection target and the speed at which the target moves, these sensors may be capable of detection beyond the detection distances stated above. Nevertheless, they should be used within the prescribed detection distances. For further details, refer to the detection range diagram on page 14.

3. Regarding of detection zone, please refer to “DETECTION PERFORMANCE” on page 14.

### 2. Rating (Measuring condition: ambient temp. = 25°C 77°F) (Common to All types)

| Items | Specified value | Remarks |
|---|---|---|
| Power supply voltage | –0.3 to 7 V DC | |
| Usable ambient temperature | –20 to 60°C –4 to +140°F | No freezing and condensing at low temperature. |
| Storage temperature | –20 to 70°C –4 to +158°F | |

**3. Electrical characteristics** (Measuring condition: ambient temp. = 25°C 77°F; operating voltage = 5V) (Common to All types)

1) Digital output

| Items | | | Symbol | Specified value | | Measured conditions |
|---|---|---|---|---|---|---|
| | | | | Standard type | Low current consumption type | |
| Reted operating voltage | | Minimum<br>Typical<br>Maximum | Vdd | 3.0 V DC<br>—<br>6.0 V DC | 2.2 V DC<br>—<br>3.0 V DC | |
| Reted consumption current (Standby) *Remark | | Typical<br>Maximum | Iw | 170 µA<br>300 µA | 46 µA<br>60 µA | Iout = 0 |
| Output (when detecting) | Current | Maximum | Iout | 100 µA | 100 µA | Vout ≧ Vdd–0.5 |
| | Voltage | Minimum<br>Maximum | Vout | Vdd –0.5<br>— | Vdd –0.5<br>— | Open when not detecting |
| Circuit stability time | | Typical<br>Maximum | Twu | 7 s<br>30 s | 7 s<br>30 s | |

Remark: The current which is consumed during detection consists of the standby consumed current plus the output current.

2) Analog output

| Items | | Symbol | Specified value | Measured conditions |
|---|---|---|---|---|
| Reted operating voltage | Minimum<br>Maximum | Vdd | 4.5 V DC<br>5.5 V DC | |
| Reted consumption current | Typical<br>Maximum | Iw | 0.17 mA<br>0.3 mA | Iout = 0 |
| Output current | Maximum | Iout | 50 µA | |
| Output voltage | Minimum<br>Typical<br>Maximum | Vout | 0 V<br>2.5 V<br>Vdd | |
| Output offset average voltage | Minimum<br>Typical<br>Maximum | Voff | 2.3 V<br>2.5 V<br>2.7 V | Steady-state output voltage when not detecting |
| Steady-state noise | Typical<br>Maximum | Vn | 130 m Vp-p<br>300 m Vp-p | |
| Circuit stability time | Maximum | Twu | 45 s | |

Note: To set to the same detection performance as the digital type, set the output voltage to the offset voltage (2.5V) ±0.45V (i.e. 2.95V or more and 2.05V or less).

**[Timing chart]**

1) Digital output

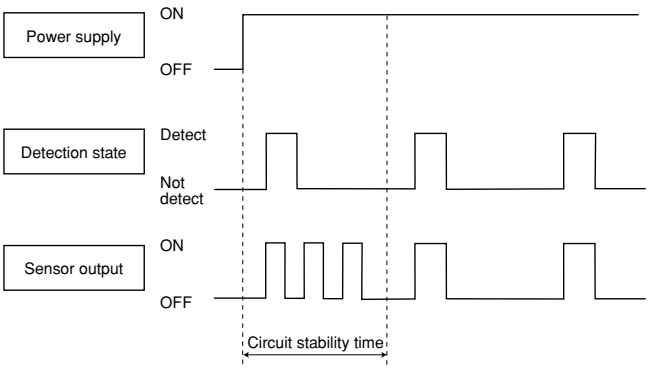


Remark: Circuit stability time: 30s max.
While the circuitry is stabilizing after the power is turned on, the sensor output is not fixed in the “on” state or “off” state. This is true regardless of whether or not the sensor has detected anything.

2) Analog output

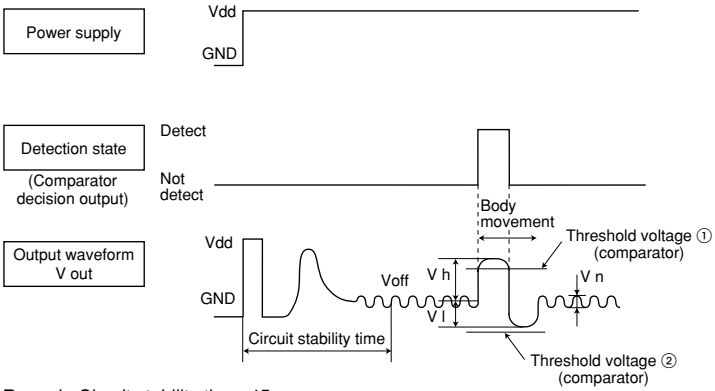


Remark: Circuit stability time: 45s max.
While the circuitry is stabilizing after the power is turned on, the sensor output is not fixed in the “on” state or “off” state. This is true regardless of whether or not the sensor has detected anything.

## DETECTION PERFORMANCE

1. Standard detection type

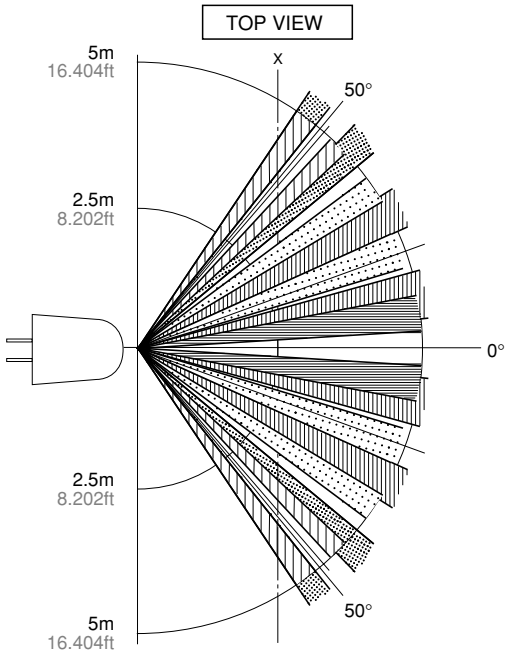


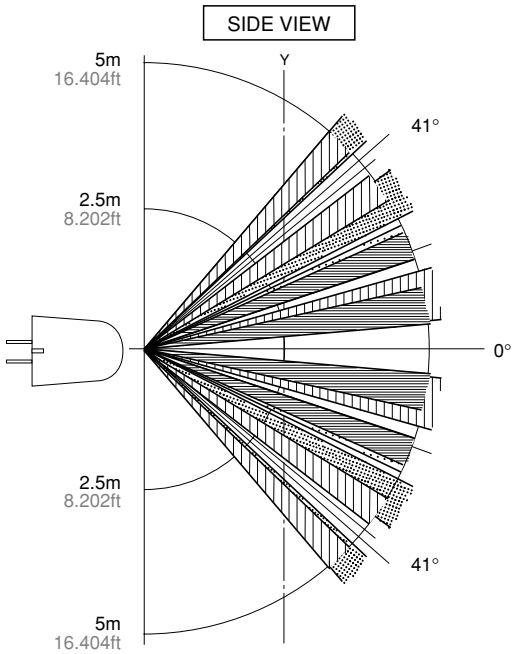


X-Y cross section

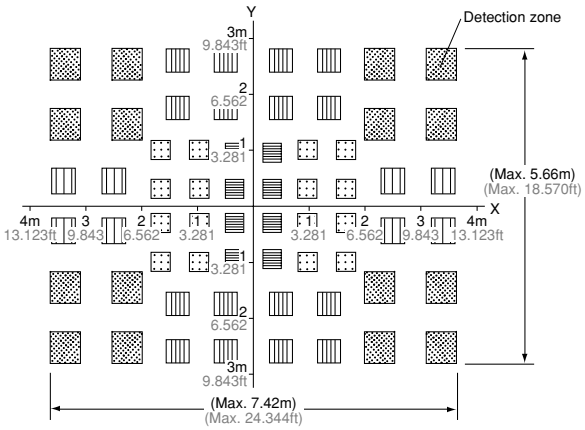


Remarks: 1. The X-Y cross-sectional diagram shows the detection area.
2. The differences in the detection zone patterns are indicative of the projections of the 16 lenses with single focal point and with five optical axes. An object whose temperature differs from the background temperature and which crosses inside the detection zone will be detected.

2. Slight motion detection type

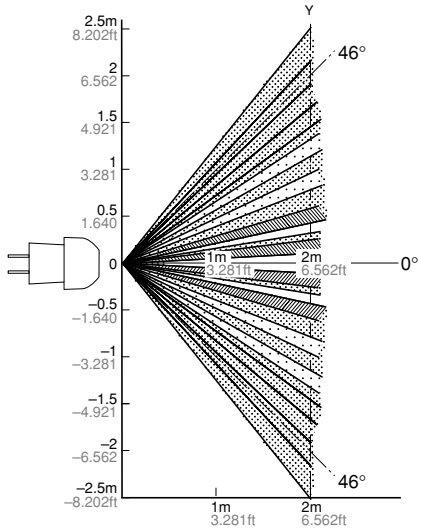


X-Y cross section

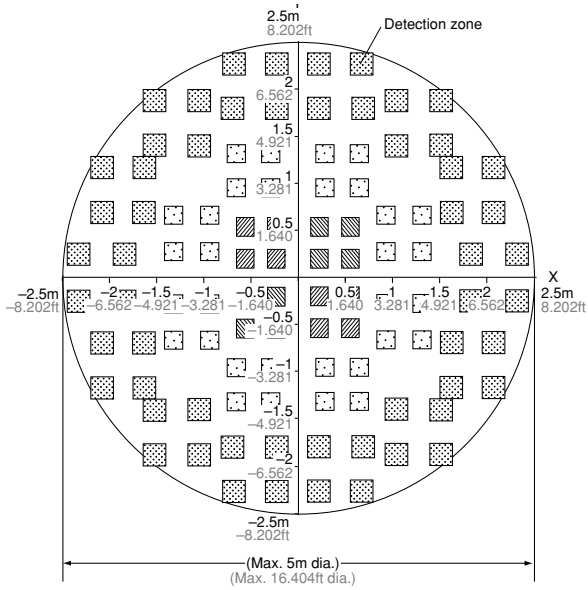


Remarks: 1. The X-Y cross-sectional diagram shows the detection area.
2. The differences in the detection zone patterns are indicative of the projections of the 26 lenses with single focal point and with three optical axes. An object whose temperature differs from the background temperature and which crosses inside the detection zone will be detected.

## 3. Spot detection type

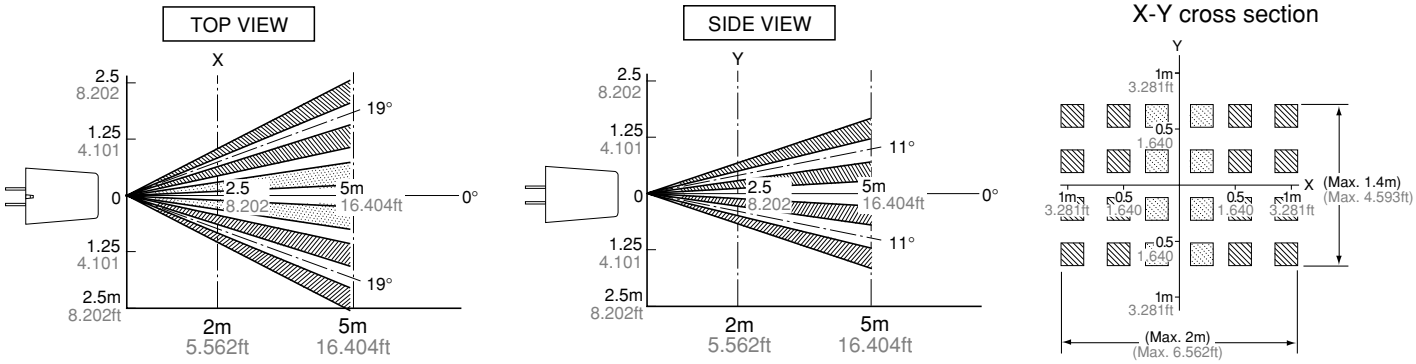


Remarks: 1. The X-Y cross-sectional diagram shows the detection area.
2. The differences in the detection zone patterns are indicative of the projections of the 6 lenses with single focal point and with two optical axes. An object whose temperature differs from the background temperature and which crosses inside the detection zone will be detected.

## 4. 10m detection type

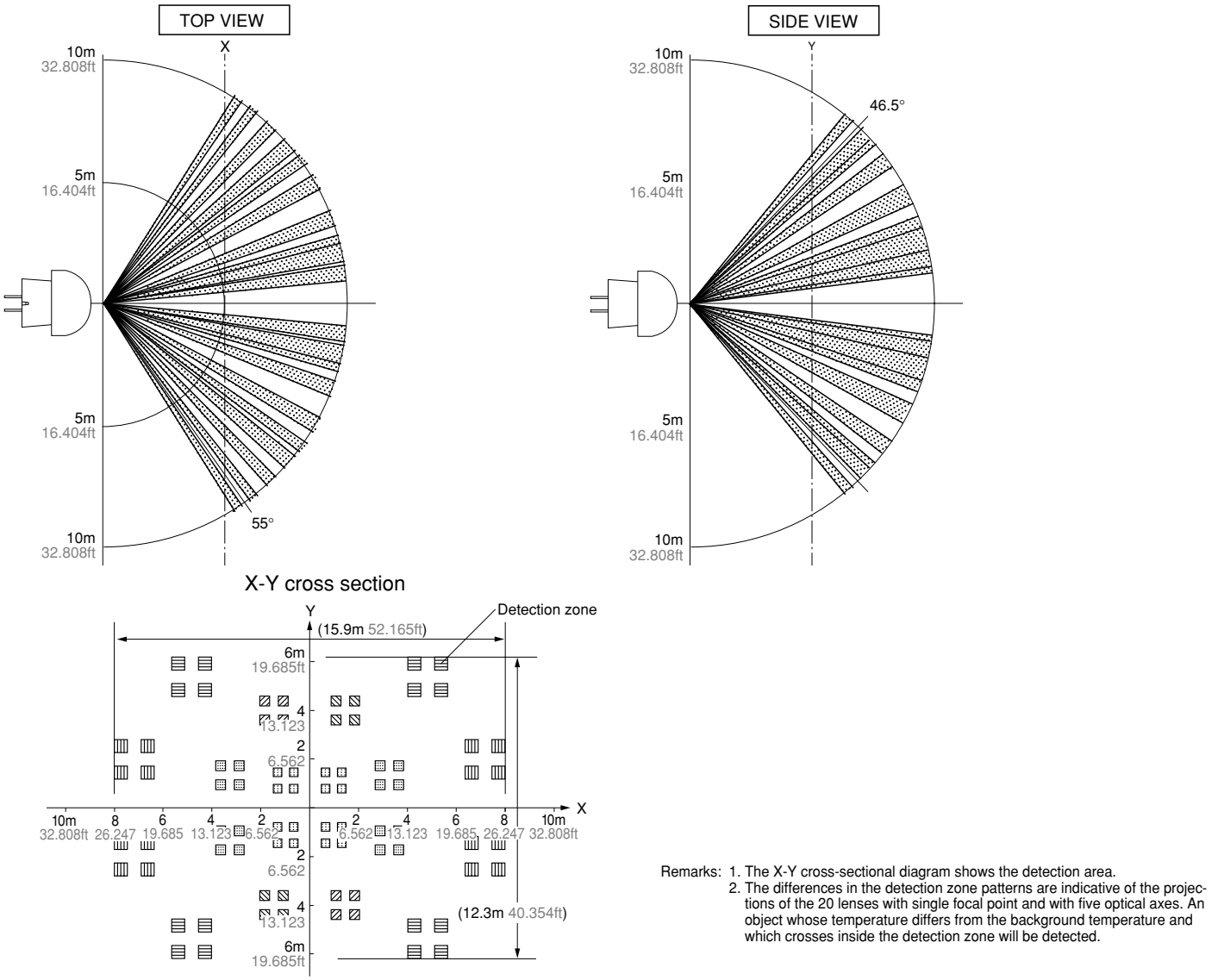


Remarks: 1. The X-Y cross-sectional diagram shows the detection area.
2. The differences in the detection zone patterns are indicative of the projections of the 20 lenses with single focal point and with five optical axes. An object whose temperature differs from the background temperature and which crosses inside the detection zone will be detected.

## 5. Notes regarding the detection zone

The detection zone has the polarity shown in the diagram on the right. When targets enter both the + and – zones with the same timing, the signals are cancelled each other, thus in this case there is a possibility that the object cannot be detected at the maximum specified detection distance.

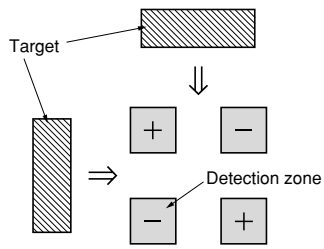

# HOW TO USE

1. Wiring diagram

1) Digital output

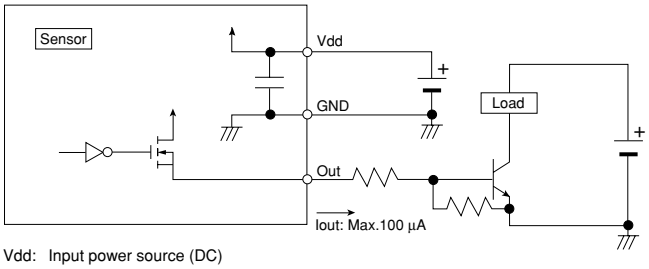


Vdd: Input power source (DC)
GND: GND
Out: Output (Comparator)

2) Analog output

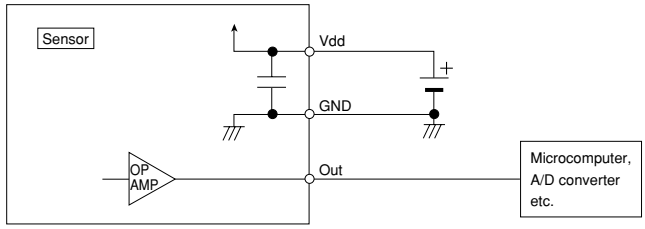


2. Timer circuit example

1) Digital output

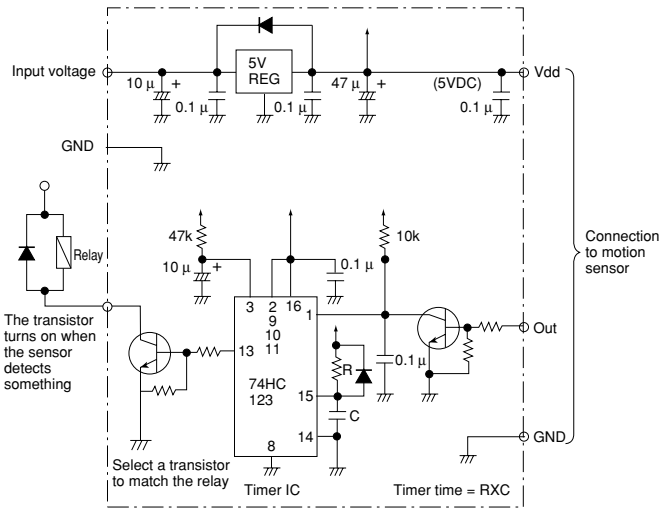


Note: This is the reference circuit which drives the MP motion sensor. Install a noise filter for applications requiring enhanced detection reliability and noise withstanding capability.
Differences in the specifications of electronic components to which the units are connected sometimes affect their correct operation; please check the units' performance and reliability for each application.

2) Analog output

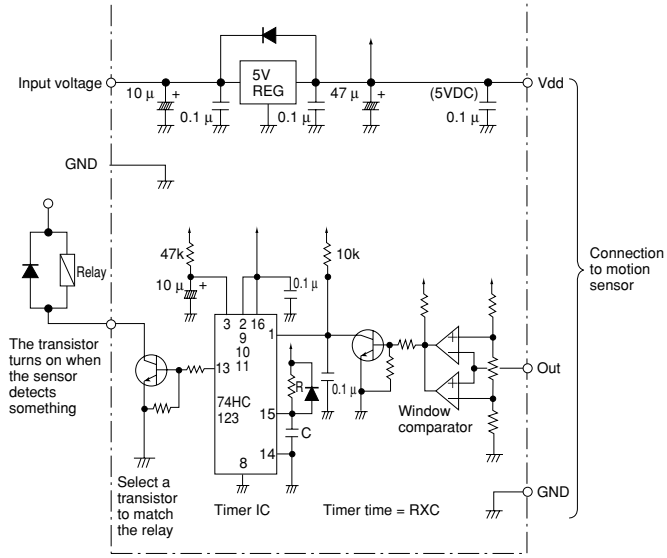


Note: This circuit is a sample of a drive circuit for the MP Motion Sensor. Its noise resistance and long-term reliability are not considered or investigated.
To improve the detection reliability and noise resistance of the circuit, consider adding a noise filter.
Matsushita Electric Works, Ltd. accepts no responsibility for damages resulting from the use of this circuit.

3. Installation

Install the sensor so that people will be entering from the X or Y direction shown below. If persons approch the sensor from the Z direction, detection distance will be shortened.

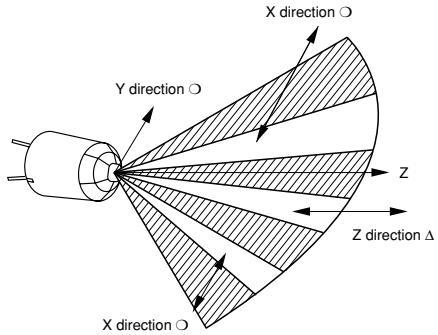

# DIMENSIONS

mm inch General tolerance ±0.5 ±.020

1. Standard detection type

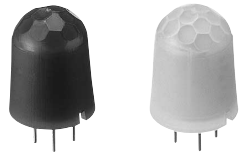

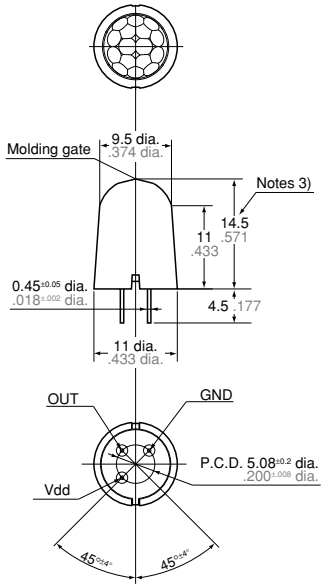


Recommended PC board pattern (BOTTOM VIEW)

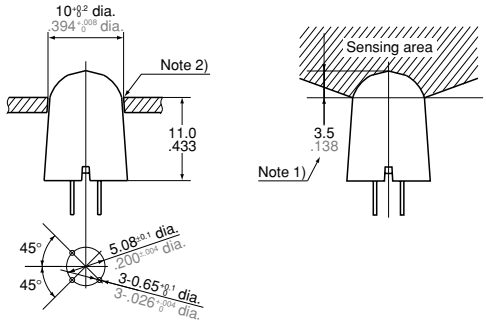


Notes: 1. In order to ensure proper detection, install it with the lens exposed at least 3.5mm .138inch.
2. As for panel mounting hole, tapering or making a large size hole should be done.
3. The height dimension does not include the remaining molding gate.

2. Slight motion detection type

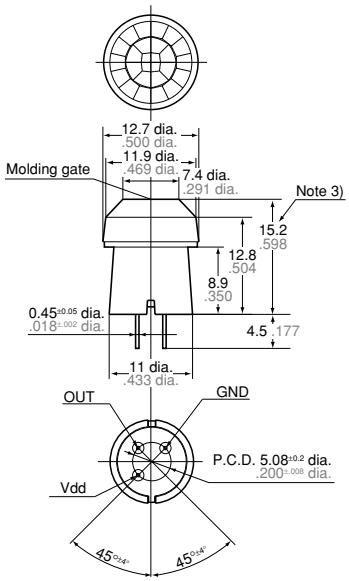


Recommended PC board pattern (BOTTOM VIEW)

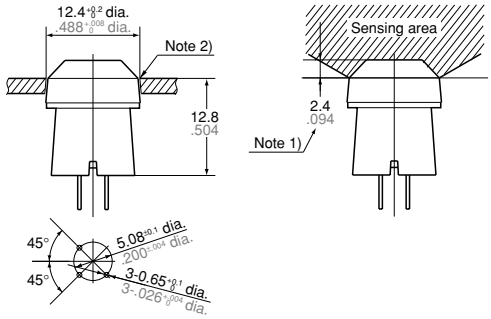


Notes: 1. In order to ensure proper detection, install it with the lens exposed at least 2.4mm .094inch.
2. As for panel mounting hole, tapering or making a large size hole should be done.
3. The height dimension does not include the remaining molding gate.

3. Spot detection type

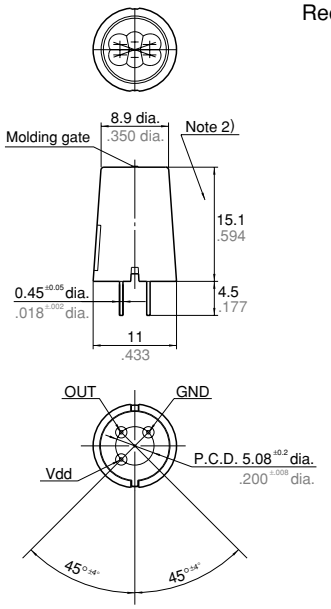


Recommended PC board pattern
(BOTTOM VIEW)

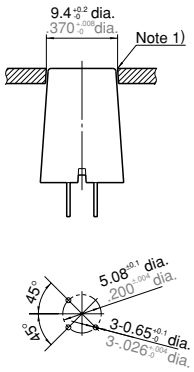


Notes: 1. As for panel mounting hole, tapering or making a large size hole should be done.
2. The height dimension does not include the remaining molding gate.

4. 10m detection type

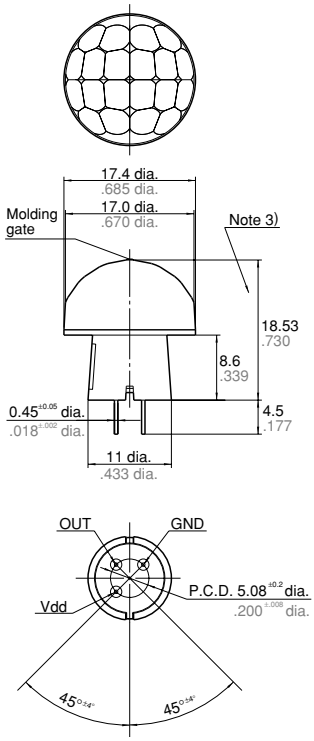


mm inch General tolerance ±0.5 ±.020

Recommended PC board pattern
(BOTTOM VIEW)

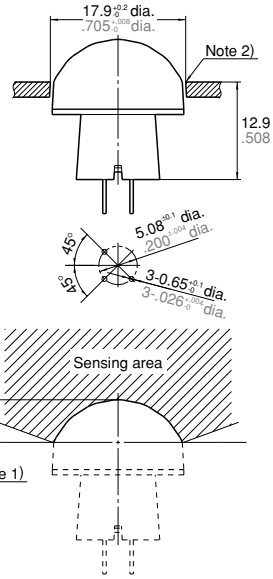


Notes:
1. In order to ensure proper detection, install it with the lens exposed at least 5.6mm .220inch.
2. As for panel mounting hole, tapering or making a large size hole should be done.
3. The height dimension does not include the remaining molding gate.

# NOTES

**1. Checkpoints relating to principle of operation**

MP motion sensors are passive infrared sensors which detect changes in the infrared rays. They may fail to detect successfully if a heat source other than a human being is detected or if there are no temperature changes in or movement of a heat source. Care must generally be taken in the following cases. The performance and reliability of the sensors must be checked out under conditions of actual use.

**<1> Cases where a heat source other than a human being is detected.**

1) When a small animal enters the detection range.
2) When the sensor is directly exposed to sunlight, a vehicle's headlights, an incandescent light or some other source of far infrared rays.
3) When the temperature inside the detection range has changed suddenly due to the entry of cold or warm air from an air-conditioning or heating unit, water vapor from a humidifier, etc.

**<2> Cases where it is difficult to detect the heat source**

1) When an object made of glass, acrylic or other subject which far infrared rays have difficulty passing through is located between the sensor and what is to be detected.
2) When the heat source inside the detection range hardly moves or when it moves at high speed; for details on the movement speed, refer to the section on the performance ratings.

**2. When the detection area becomes larger**

When the difference between the ambient temperature and body temperature is large (more than 20°C 68°F), detection may occur in isolated areas outside the specified detection range.

**3. Other handling cautions**

1) Be careful not to allow dust or dirt to accumulate on the lens as this will adversely affect the detection sensitivity.
2) The lens is made of a soft material (polyethylene).
Avoid applying a load or impact since this will deform or scratch the lens, making proper operation impossible and causing a deterioration in its performance.
3) The sensor may be damaged if it is exposed to static with a voltage exceeding ±200V. Therefore, do not touch its terminals directly, and exercise adequate care in the handling of the sensor.
4) When the leads are to be soldered, solder them by hand for less than 3 seconds at a temperature of less than 350°C 662°F at the tip of the soldering iron. Avoid using a solder bath since this will causing a deterioration in the sensor's performance.
5) Do not attempt to clean the sensor. Cleaning fluid may enter inside the lens area causing a deterioration in performance.
6) When using the sensors with cables, it is recommended that cables which are shielded and as short as possible be used in order to safeguard against the effects of noise.

For the general precautions, refer to the Notes for Motion Sensors on page 27.

ООО «ЛайфЭлектроникс» “LifeElectronics” LLC

ИНН 7805602321 КПП 780501001 Р/С 40702810122510004610 ФАКБ "АБСОЛЮТ БАНК" (ЗАО) в г.Санкт-Петербурге К/С 30101810900000000703 БИК 044030703

*Компания «Life Electronics» занимается поставками электронных компонентов импортного и отечественного производства от производителей и со складов крупных дистрибьюторов Европы, Америки и Азии.*

*С конца 2013 года компания активно расширяет линейку поставок компонентов по направлению коаксиальный кабель, кварцевые генераторы и конденсаторы (керамические, пленочные, электролитические), за счёт заключения дистрибьюторских договоров*

*Мы предлагаем:*

- *Конкурентоспособные цены и скидки постоянным клиентам.*
- *Специальные условия для постоянных клиентов.*
- *Подбор аналогов.*
- *Поставку компонентов в любых объемах, удовлетворяющих вашим потребностям.*

- *Приемлемые сроки поставки, возможна ускоренная поставка.*
- *Доставку товара в любую точку России и стран СНГ.*
- *Комплексную поставку.*
- *Работу по проектам и поставку образцов.*
- *Формирование склада под заказчика.*

- *Сертификаты соответствия на поставляемую продукцию (по желанию клиента).*
- *Тестирование поставляемой продукции.*
- *Поставку компонентов, требующих военную и космическую приемку.*
- *Входной контроль качества.*
- *Наличие сертификата ISO.*

*В составе нашей компании организован Конструкторский отдел, призванный помогать разработчикам, и инженерам.*

*Конструкторский отдел помогает осуществить:*

- *Регистрацию проекта у производителя компонентов.*
- *Техническую поддержку проекта.*
- *Защиту от снятия компонента с производства.*
- *Оценку стоимости проекта по компонентам.*
- *Изготовление тестовой платы монтаж и пусконаладочные работы.*

*Тел: +7 (812) 336 43 04 (многоканальный)*
*Email: org@lifeelectronics.ru*

***www.lifeelectronics.ru***