# DATA SHEET

## 74ABT02
## Quad 2-input NOR gate

Product specification

IC24 Data Handbook

1995 Sep 18

Philips
Semiconductors

PHILIPS

# Quad 2-input NOR gate 74ABT02

## QUICK REFERENCE DATA

| SYMBOL | PARAMETER | CONDITIONS $T_{amb}$ = 25°C; GND = 0V | TYPICAL | UNIT |
|---|---|---|---|---|
| $t_{PLH}$ $t_{PHL}$ | Propagation delay An or Bn to $\overline{Y}$n | $C_L$ = 50pF; $V_{CC}$ = 5V | 2.4 1.8 | ns |
| $t_{OSLH}$ $t_{OSHL}$ | Output to Output skew | | 0.4 | ns |
| $C_{IN}$ | Input capacitance | $V_I$ = 0V or $V_{CC}$ | 3 | pF |
| $I_{CC}$ | Total supply current | Outputs disabled; $V_{CC}$ = 5.5V | 50 | µA |

## PIN CONFIGURATION

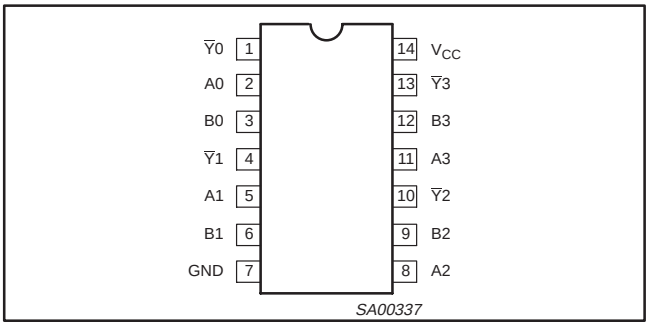


## LOGIC SYMBOL

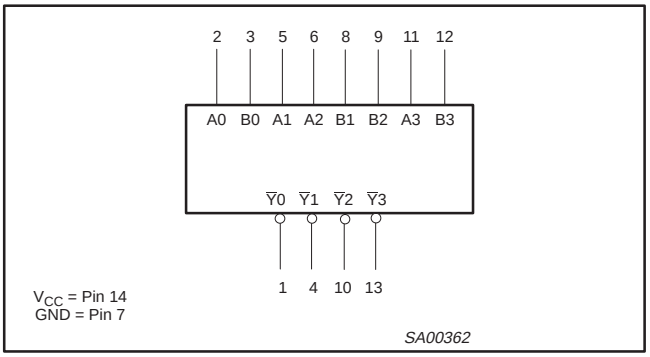


## LOGIC DIAGRAM

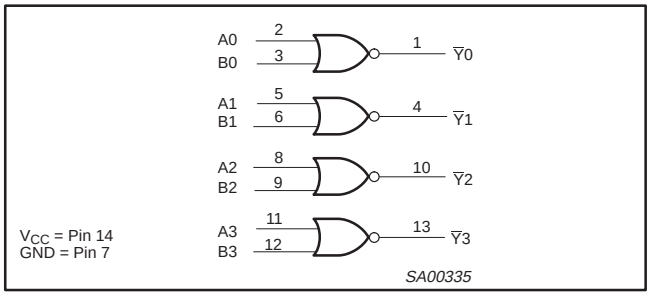


## PIN DESCRIPTION

| PIN NUMBER | SYMBOL | NAME AND FUNCTION |
|---|---|---|
| 2, 3, 5, 6, 8, 9, 11, 12 | An-Bn | Data inputs |
| 1, 4, 10, 13 | $\overline{Y}$n | Data outputs |
| 7 | GND | Ground (0V) |
| 14 | $V_{CC}$ | Positive supply voltage |

## LOGIC SYMBOL (IEEE/IEC)

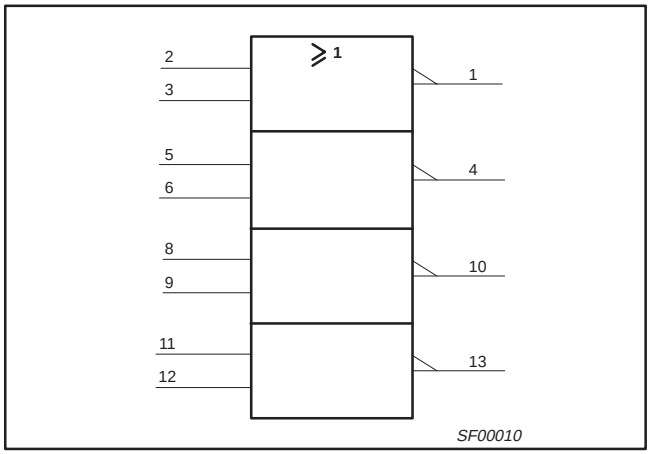


## FUNCTION TABLE

| INPUTS | | OUTPUT |
|---|---|---|
| An | Bn | $\overline{Y}$n |
| L | L | H |
| L | H | L |
| H | L | L |
| H | H | L |

**NOTES:**
H = High voltage level
L = Low voltage level

## ORDERING INFORMATION

| PACKAGES | TEMPERATURE RANGE | OUTSIDE NORTH AMERICA | NORTH AMERICA | DWG NUMBER |
|---|---|---|---|---|
| 14-Pin Plastic DIP | –40°C to +85°C | 74ABT02 N | 74ABT02 N | SOT27-1 |
| 14-Pin plastic SO | –40°C to +85°C | 74ABT02 D | 74ABT02 D | SOT108-1 |
| 14-Pin Plastic SSOP Type II | –40°C to +85°C | 74ABT02 DB | 74ABT02 DB | SOT337-1 |
| 14-Pin Plastic TSSOP Type I | –40°C to +85°C | 74ABT02 PW | 74ABT02PW DH | SOT402-1 |

## ABSOLUTE MAXIMUM RATINGS[1, 2]

| SYMBOL | PARAMETER | CONDITIONS | RATING | UNIT |
|---|---|---|---|---|
| $V_{CC}$ | DC supply voltage | | –0.5 to +7.0 | V |
| $I_{IK}$ | DC input diode current | $V_I < 0$ | –18 | mA |
| $V_I$ | DC input voltage[3] | | –1.2 to +7.0 | V |
| $I_{OK}$ | DC output diode current | $V_O < 0$ | –50 | mA |
| $V_{OUT}$ | DC output voltage[3] | output in Off or High state | –0.5 to +5.5 | V |
| $I_{OUT}$ | DC output current | output in Low state | 40 | mA |
| $T_{stg}$ | Storage temperature range | | –65 to 150 | °C |

**NOTES:**
1. Stresses beyond those listed may cause permanent damage to the device. These are stress ratings only and functional operation of the device at these or any other conditions beyond those indicated under “recommended operating conditions” is not implied. Exposure to absolute-maximum-rated conditions for extended periods may affect device reliability.
2. The performance capability of a high-performance integrated circuit in conjunction with its thermal environment can create junction temperatures which are detrimental to reliability. The maximum junction temperature of this integrated circuit should not exceed 150°C.
3. The input and output voltage ratings may be exceeded if the input and output current ratings are observed.

## RECOMMENDED OPERATING CONDITIONS

| SYMBOL | PARAMETER | LIMITS | | UNIT |
|---|---|---|---|---|
| | | MIN | MAX | |
| $V_{CC}$ | DC supply voltage | 4.5 | 5.5 | V |
| $V_I$ | Input voltage | 0 | $V_{CC}$ | V |
| $V_{IH}$ | High-level input voltage | 2.0 | | V |
| $V_{IL}$ | Low-level input voltage | | 0.8 | V |
| $I_{OH}$ | High-level output current | | –15 | mA |
| $I_{OL}$ | Low-level output current | | 20 | mA |
| $\Delta t/\Delta v$ | Input transition rise or fall rate | 0 | 5 | ns/V |
| $T_{amb}$ | Operating free-air temperature range | –40 | +85 | °C |

## DC ELECTRICAL CHARACTERISTICS

| SYMBOL | PARAMETER | TEST CONDITIONS | LIMITS | | | | | UNIT |
|---|---|---|---|---|---|---|---|---|
| | | | $T_{amb}$ = +25°C | | | $T_{amb}$ = –40°C to +85°C | | |
| | | | MIN | TYP | MAX | MIN | MAX | |
| $V_{IK}$ | Input clamp voltage | $V_{CC}$ = 4.5V; $I_{IK}$ = –18mA | | –0.9 | –1.2 | | –1.2 | V |
| $V_{OH}$ | High-level output voltage | $V_{CC}$ = 4.5V; $I_{OH}$ = –15mA; $V_I = V_{IL}$ or $V_{IH}$ | 2.5 | 2.9 | | 2.5 | | V |
| $V_{OL}$ | Low-level output voltage | $V_{CC}$ = 4.5V; $I_{OL}$ = 20mA; $V_I = V_{IL}$ or $V_{IH}$ | | 0.35 | 0.5 | | 0.5 | V |
| $I_I$ | Input leakage current | $V_{CC}$ = 5.5V; $V_I$ = GND or 5.5V | | ±0.01 | ±1.0 | | ±1.0 | µA |
| $I_{OFF}$ | Power-off leakage current | $V_{CC}$ = 0.0V; $V_O$ or $V_I \leq 4.5$V | | ±5.0 | ±100 | | ±100 | µA |
| $I_{CEX}$ | Output High leakage current | $V_{CC}$ = 5.5V; $V_O$ = 5.5V; $V_I$ = GND or $V_{CC}$ | | 5.0 | 50 | | 50 | µA |
| $I_O$ | Output current[1] | $V_{CC}$ = 5.5V; $V_O$ = 2.5V | –50 | –75 | –180 | –50 | –180 | mA |
| $I_{CC}$ | Quiescent supply current | $V_{CC}$ = 5.5V; $V_I$ = GND or $V_{CC}$ | | 2 | 50 | | 50 | µA |
| $\Delta I_{CC}$ | Additional supply current per input pin[2] | $V_{CC}$ = 5.5V; One data input at 3.4V, other inputs at $V_{CC}$ or GND | | 0.25 | 500 | | 500 | µA |

**NOTES:**
1. Not more than one output should be tested at a time, and the duration of the test should not exceed one second.
2. This is the increase in supply current for each input at 3.4V.

## AC CHARACTERISTICS

GND = 0V; $t_R = t_F = 2.5ns$; $C_L = 50pF$, $R_L = 500\Omega$

| SYMBOL | PARAMETER | WAVEFORM | LIMITS | | | | | UNIT |
|---|---|---|---|---|---|---|---|---|
| | | | $T_{amb}$ = +25°C $V_{CC}$ = +5.0V | | | $T_{amb}$ = –40°C to +85°C $V_{CC}$ = +5.0V ±0.5V | | |
| | | | MIN | TYP | MAX | MIN | MAX | |
| $t_{PLH}$<br>$t_{PHL}$ | Propagation delay<br>An or Bn to $\overline{Y}$n | 1 | 1.0<br>1.0 | 2.4<br>1.8 | 3.7<br>2.8 | 1.0<br>1.0 | 4.4<br>3.4 | ns |
| $t_{OSHL}$<br>$t_{OSLH}$[1] | Output to Output skew<br>An or Bn to $\overline{Y}$n | 2 | | 0.4<br>0.4 | 0.5<br>0.5 | | 0.5<br>0.5 | ns |

**NOTE:**

1. Skew is defined as the absolute value of the difference between the actual propagation delay for any two separate outputs of the same device. The specification applies to any outputs switching in the the same direction, either HIGH-to-LOW ($t_{OSHL}$) or LOW-to-HIGH ($t_{OSLH}$); parameter guaranteed by design.

## AC WAVEFORMS

$V_M = 1.5V$, $V_{IN}$ = GND to 3.0V

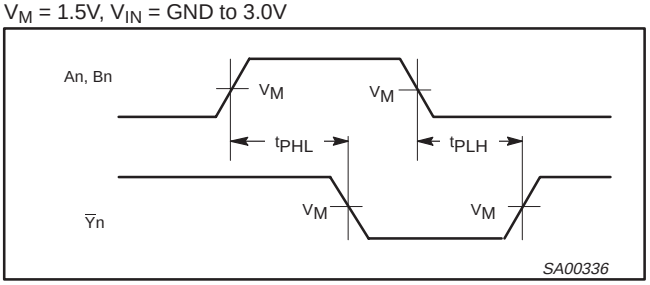


**Waveform 1. Propagation delay for inverting outputs**

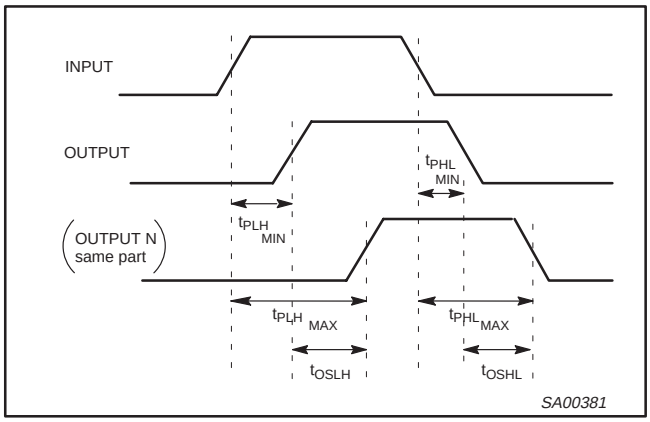


**Waveform 2. Common edge skew**

## TEST CIRCUIT AND WAVEFORMS

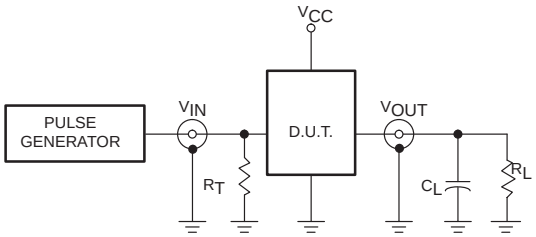


**Test Circuit for Outputs**

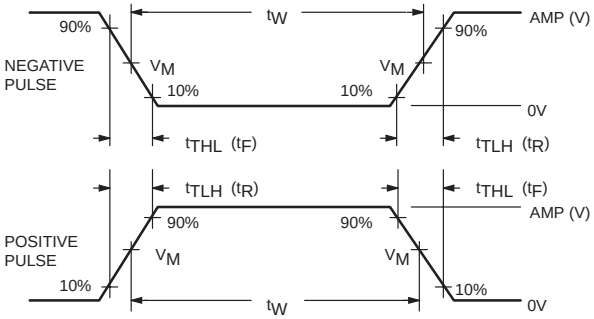


$V_M = 1.5V$

**Input Pulse Definition**

### DEFINITIONS

$R_L$ = Load resistor; see AC CHARACTERISTICS for value.

$C_L$ = Load capacitance includes jig and probe capacitance; see AC CHARACTERISTICS for value.

$R_T$ = Termination resistance should be equal to $Z_{OUT}$ of pulse generators.

| FAMILY | INPUT PULSE REQUIREMENTS | | | | |
|---|---|---|---|---|---|
| | Amplitude | Rep. Rate | $t_W$ | $t_R$ | $t_F$ |
| 74ABT | 3.0V | 1MHz | 500ns | 2.5ns | 2.5ns |

SH00067

**DIP14: plastic dual in-line package; 14 leads (300 mil)** **SOT27-1**

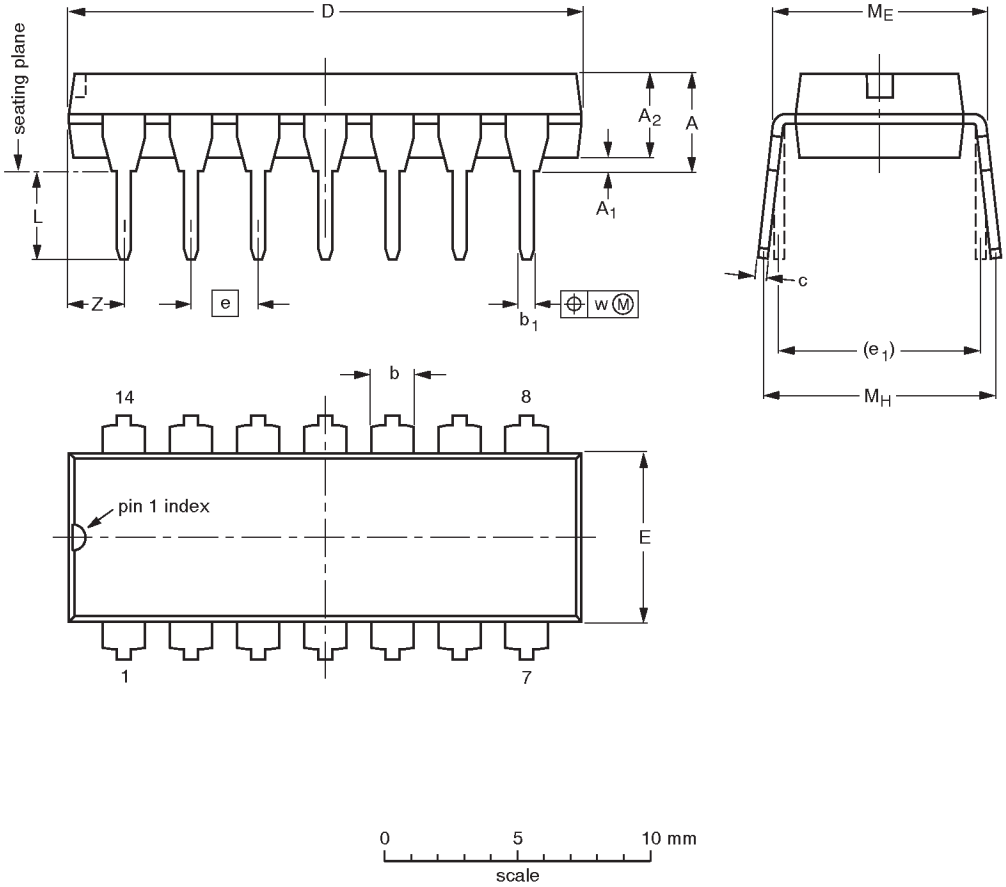


**DIMENSIONS (inch dimensions are derived from the original mm dimensions)**

| UNIT | A max. | $A_1$ min. | $A_2$ max. | b | $b_1$ | c | D (1) | E (1) | e | $e_1$ | L | $M_E$ | $M_H$ | w | Z (1) max. |
|---|---|---|---|---|---|---|---|---|---|---|---|---|---|---|---|
| mm | 4.2 | 0.51 | 3.2 | 1.73<br>1.13 | 0.53<br>0.38 | 0.36<br>0.23 | 19.50<br>18.55 | 6.48<br>6.20 | 2.54 | 7.62 | 3.60<br>3.05 | 8.25<br>7.80 | 10.0<br>8.3 | 0.254 | 2.2 |
| inches | 0.17 | 0.020 | 0.13 | 0.068<br>0.044 | 0.021<br>0.015 | 0.014<br>0.009 | 0.77<br>0.73 | 0.26<br>0.24 | 0.10 | 0.30 | 0.14<br>0.12 | 0.32<br>0.31 | 0.39<br>0.33 | 0.01 | 0.087 |

**Note**

1. Plastic or metal protrusions of 0.25 mm maximum per side are not included.

| OUTLINE VERSION | REFERENCES | | | | EUROPEAN PROJECTION | ISSUE DATE |
|---|---|---|---|---|---|---|
| | IEC | JEDEC | EIAJ | | | |
| SOT27-1 | 050G04 | MO-001AA | | | | ~~92-11-17~~<br>95-03-11 |

## SO14: plastic small outline package; 14 leads; body width 3.9 mm SOT108-1

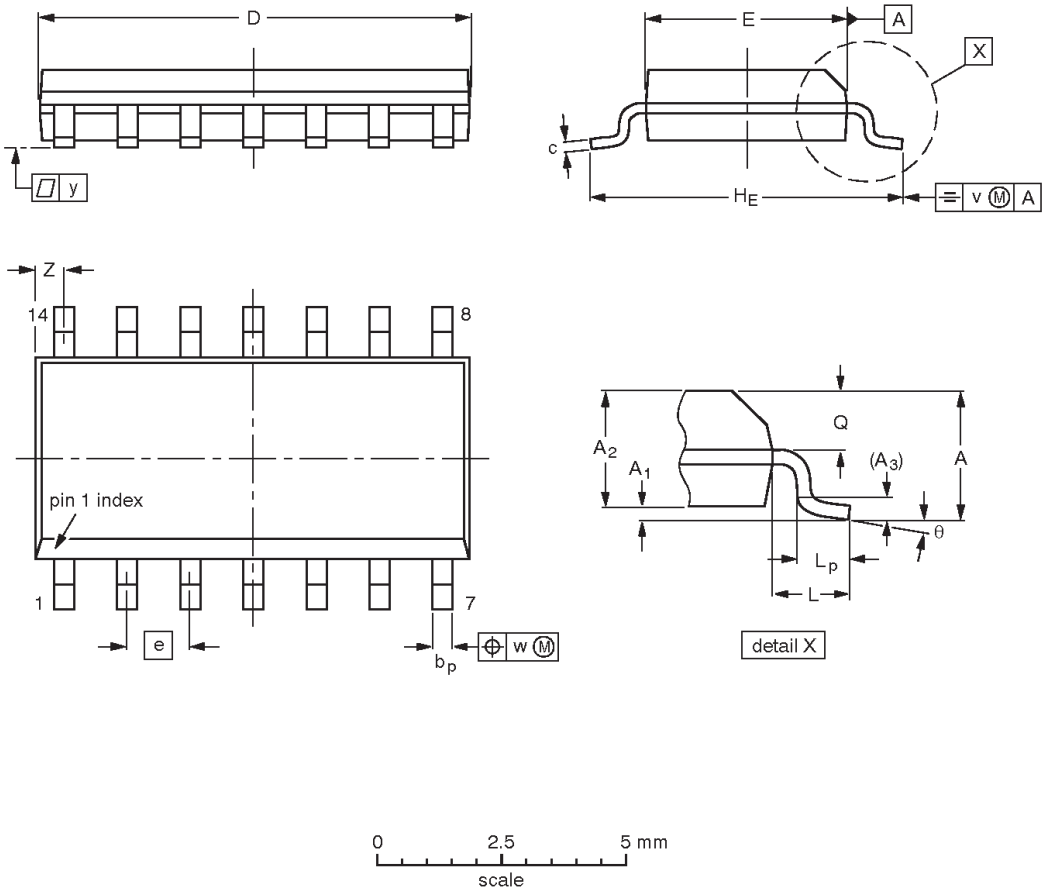


**DIMENSIONS (inch dimensions are derived from the original mm dimensions)**

| UNIT | A max. | $A_1$ | $A_2$ | $A_3$ | $b_p$ | c | D(1) | E(1) | e | $H_E$ | L | $L_p$ | Q | v | w | y | Z(1) | θ |
|---|---|---|---|---|---|---|---|---|---|---|---|---|---|---|---|---|---|---|
| mm | 1.75 | 0.25<br>0.10 | 1.45<br>1.25 | 0.25 | 0.49<br>0.36 | 0.25<br>0.19 | 8.75<br>8.55 | 4.0<br>3.8 | 1.27 | 6.2<br>5.8 | 1.05 | 1.0<br>0.4 | 0.7<br>0.6 | 0.25 | 0.25 | 0.1 | 0.7<br>0.3 | 8°<br>0° |
| inches | 0.069 | 0.010<br>0.004 | 0.057<br>0.049 | 0.01 | 0.019<br>0.014 | 0.0100<br>0.0075 | 0.35<br>0.34 | 0.16<br>0.15 | 0.050 | 0.244<br>0.228 | 0.041 | 0.039<br>0.016 | 0.028<br>0.024 | 0.01 | 0.01 | 0.004 | 0.028<br>0.012 | |

**Note**

1. Plastic or metal protrusions of 0.15 mm maximum per side are not included.

| OUTLINE VERSION | REFERENCES | | | | EUROPEAN PROJECTION | ISSUE DATE |
|---|---|---|---|---|---|---|
| | IEC | JEDEC | EIAJ | | | |
| SOT108-1 | 076E06S | MS-012AB | | | | ~~95-01-23~~<br>97-05-22 |

**SSOP14: plastic shrink small outline package; 14 leads; body width 5.3 mm** **SOT337-1**

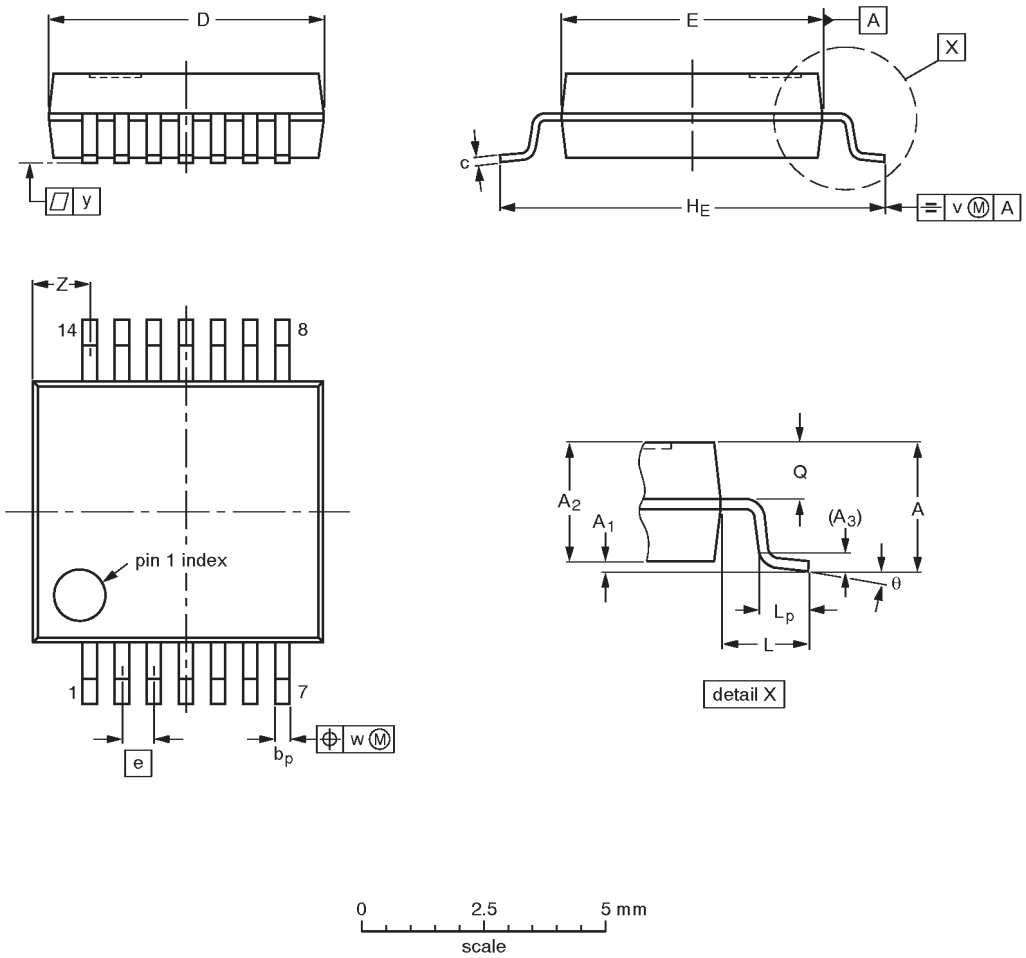


**DIMENSIONS (mm are the original dimensions)**

| UNIT | A max. | $A_1$ | $A_2$ | $A_3$ | $b_p$ | c | D (1) | E (1) | e | $H_E$ | L | $L_p$ | Q | v | w | y | Z (1) | θ |
|---|---|---|---|---|---|---|---|---|---|---|---|---|---|---|---|---|---|---|
| mm | 2.0 | 0.21<br>0.05 | 1.80<br>1.65 | 0.25 | 0.38<br>0.25 | 0.20<br>0.09 | 6.4<br>6.0 | 5.4<br>5.2 | 0.65 | 7.9<br>7.6 | 1.25 | 1.03<br>0.63 | 0.9<br>0.7 | 0.2 | 0.13 | 0.1 | 1.4<br>0.9 | 8°<br>0° |

**Note**

1. Plastic or metal protrusions of 0.25 mm maximum per side are not included.

| OUTLINE VERSION | REFERENCES | | | | EUROPEAN PROJECTION | ISSUE DATE |
|---|---|---|---|---|---|---|
| | IEC | JEDEC | EIAJ | | | |
| SOT337-1 | | MO-150AB | | | | ~~95-02-04~~<br>96-01-18 |

**TSSOP14: plastic thin shrink small outline package; 14 leads; body width 4.4 mm** **SOT402-1**

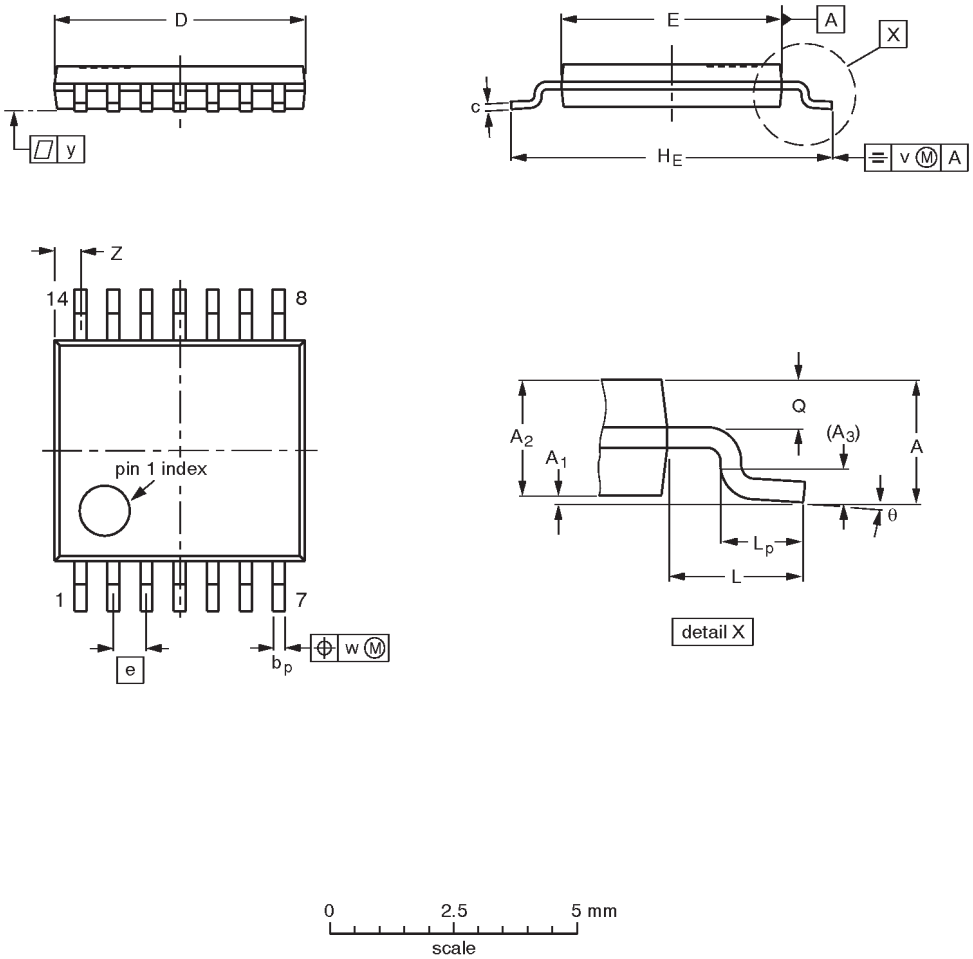


**DIMENSIONS (mm are the original dimensions)**

| UNIT | A max. | $A_1$ | $A_2$ | $A_3$ | $b_p$ | c | D (1) | E (2) | e | $H_E$ | L | $L_p$ | Q | v | w | y | Z (1) | θ |
|---|---|---|---|---|---|---|---|---|---|---|---|---|---|---|---|---|---|---|
| mm | 1.10 | 0.15<br>0.05 | 0.95<br>0.80 | 0.25 | 0.30<br>0.19 | 0.2<br>0.1 | 5.1<br>4.9 | 4.5<br>4.3 | 0.65 | 6.6<br>6.2 | 1.0 | 0.75<br>0.50 | 0.4<br>0.3 | 0.2 | 0.13 | 0.1 | 0.72<br>0.38 | 8°<br>0° |

**Notes**

1. Plastic or metal protrusions of 0.15 mm maximum per side are not included.
2. Plastic interlead protrusions of 0.25 mm maximum per side are not included.

| OUTLINE VERSION | REFERENCES | | | | EUROPEAN PROJECTION | ISSUE DATE |
|---|---|---|---|---|---|---|
| | IEC | JEDEC | EIAJ | | | |
| SOT402-1 | | MO-153 | | | | ~~94-07-12~~<br>95-04-04 |

**NOTES**

## DEFINITIONS

| Data Sheet Identification | Product Status | Definition |
|---|---|---|
| *Objective Specification* | Formative or in Design | This data sheet contains the design target or goal specifications for product development. Specifications may change in any manner without notice. |
| *Preliminary Specification* | Preproduction Product | This data sheet contains preliminary data, and supplementary data will be published at a later date. Philips Semiconductors reserves the right to make changes at any time without notice in order to improve design and supply the best possible product. |
| *Product Specification* | Full Production | This data sheet contains Final Specifications. Philips Semiconductors reserves the right to make changes at any time without notice, in order to improve design and supply the best possible product. |

Philips Semiconductors and Philips Electronics North America Corporation reserve the right to make changes, without notice, in the products, including circuits, standard cells, and/or software, described or contained herein in order to improve design and/or performance. Philips Semiconductors assumes no responsibility or liability for the use of any of these products, conveys no license or title under any patent, copyright, or mask work right to these products, and makes no representations or warranties that these products are free from patent, copyright, or mask work right infringement, unless otherwise specified. Applications that are described herein for any of these products are for illustrative purposes only. Philips Semiconductors makes no representation or warranty that such applications will be suitable for the specified use without further testing or modification.

LIFE SUPPORT APPLICATIONS
Philips Semiconductors and Philips Electronics North America Corporation Products are not designed for use in life support appliances, devices, or systems where malfunction of a Philips Semiconductors and Philips Electronics North America Corporation Product can reasonably be expected to result in a personal injury. Philips Semiconductors and Philips Electronics North America Corporation customers using or selling Philips Semiconductors and Philips Electronics North America Corporation Products for use in such applications do so at their own risk and agree to fully indemnify Philips Semiconductors and Philips Electronics North America Corporation for any damages resulting from such improper use or sale.

**Philips Semiconductors**
**811 East Arques Avenue**
**P.O. Box 3409**
**Sunnyvale, California 94088–3409**
**Telephone 800-234-7381**

Philips Semiconductors and Philips Electronics North America Corporation register eligible circuits under the Semiconductor Chip Protection Act.
© Copyright Philips Electronics North America Corporation 1995
All rights reserved. Printed in U.S.A.

(print code) Date of release: July 1994

Document order number: 9397-750-04853

ООО «ЛайфЭлектроникс» “LifeElectronics” LLC

ИНН 7805602321 КПП 780501001 Р/С 40702810122510004610 ФАКБ "АБСОЛЮТ БАНК" (ЗАО) в г.Санкт-Петербурге К/С 30101810900000000703 БИК 044030703

*Компания «Life Electronics» занимается поставками электронных компонентов импортного и отечественного производства от производителей и со складов крупных дистрибьюторов Европы, Америки и Азии.*

*С конца 2013 года компания активно расширяет линейку поставок компонентов по направлению коаксиальный кабель, кварцевые генераторы и конденсаторы (керамические, пленочные, электролитические), за счёт заключения дистрибьюторских договоров*

*Мы предлагаем:*

- *Конкурентоспособные цены и скидки постоянным клиентам.*
- *Специальные условия для постоянных клиентов.*
- *Подбор аналогов.*
- *Поставку компонентов в любых объемах, удовлетворяющих вашим потребностям.*

- *Приемлемые сроки поставки, возможна ускоренная поставка.*
- *Доставку товара в любую точку России и стран СНГ.*
- *Комплексную поставку.*
- *Работу по проектам и поставку образцов.*
- *Формирование склада под заказчика.*

- *Сертификаты соответствия на поставляемую продукцию (по желанию клиента).*
- *Тестирование поставляемой продукции.*
- *Поставку компонентов, требующих военную и космическую приемку.*
- *Входной контроль качества.*
- *Наличие сертификата ISO.*

*В составе нашей компании организован Конструкторский отдел, призванный помогать разработчикам, и инженерам.*

*Конструкторский отдел помогает осуществить:*

- *Регистрацию проекта у производителя компонентов.*
- *Техническую поддержку проекта.*
- *Защиту от снятия компонента с производства.*
- *Оценку стоимости проекта по компонентам.*
- *Изготовление тестовой платы монтаж и пусконаладочные работы.*

*Тел: +7 (812) 336 43 04 (многоканальный)*
*Email: org@lifeelectronics.ru*

***www.lifeelectronics.ru***