Thermal Overcurrent Circuit Breaker 1110-...

Description

Tease-free, trip-free, snap action mechanism. Designed for snap-in panel mounting utilising round hole or industry standard fuse-holder cut-out dimensions. Featuring an ergonomically styled two colour actuator with indicator band clearly showing the tripped/OFF position. Approved to CBE standard EN 60934 (IEC 60934): S-type TO CBE

1110-F1..

Typical applications

Motors, transformers, solenoids, extra low voltage systems, household and office machines, instrumentation, marine applications, mobile homes.

Features

- Single pole thermal circuit breaker/switch combination
- Voltage rating: AC 250 V, DC 50 V
- Current ratings: 0.05…16 A
- Approvals: VDE, UL, CSA
- Accessories: Plastic cap to protect against dust and water in actuator and terminal area (IP64)

Your benefits

- Cost and space savings because one component unites the functions of ON/OFF switch and overload protection
- Time savings through quick trouble-shooting and fast and easy reset by push button
- Maximum machine and equipment uptime through perfectly matched overload protection protection and quick reset

Preferred types – for more details on all configurations please see order numbering code

Preferred types are E-T-A products most frequently used by E-T-A customers. We manufacture E-T-A preferred types in particularly high volumes.

Preferred types	Short description	Preferred ratings (A)							
		1	2	3	5	6	8	10	16
1110-F112-P1M1-	panel thickness 0.8…1.6 mm	•	•	•	•	•	•	•	•
1110-F212-P1M1-	panel thickness 1.8…3 mm	•	•	•	•	•	•	•	•

Approvals

Conformities

1

Technical data

For further details please see: www.e-t-a.de/ti_e			
Voltage rating	AC 250 V; DC 50 V		
Current rating	0.05...16 A		
I_n	operations	U_n	I
0.05...10 A	10000	AC 250 V	1xIn
0.05...10 A	10000	DC 28 V	1xIn
0.05...10 A	6000	DC 50 V	1xIn
12...16 A	2000	DC 50 V	1xIn
Ambient temperature	-20...60 °C (-4...+140 °F)		
Insulation co-ordination (IEC 60664)	2.5 kV/2 reinforced insulation in operating area		
Dielectric strength	**operating area** test voltage AC 3 000 V		
Insulation resistance	> 100 MΩ (DC 500 V)		
Interrupting capacity I_{cn}	AC 250 V:	0.05...10 A	8 x I_N
	DC 50 V:	0.05...6 A	10 x I_N
		7...16 A	130 A
	DC 28 V:	7...10 A	200 A

Technical data

Interrupting capacity (UL 1077)	I_N	U_N	
	0.05...6 A	AC 250V	1 000 A, C, 1
	7...16 A	AC 125V	1 000 A, U, 1
	0.05...16 A	DC 50V	1 000 A, C, 1
Degree of protection (IEC 60529) operating area	IP40 with protective cover IP64		
terminal area	IP00 with protective cover IP64		
Vibration	8 g (57-500 Hz) ± 0.61 mm (10-57 Hz), to IEC 60068-2-6, test Fc, 10 frequency cycles/axis		
Shock	30 g (11 ms) to IEC 60068-2-27, test Ea		
Corrosion	96 hours at 5 % salt mist, to IEC 60068-2-11, test Ka		
Humidity	240 hours at 95 % RH to IEC 60068-2-78, test Cab		
Mass	approx. 12 g		

Preferred types

Preferred types are E-T-A products most frequently used by E-T-A customers. We manufacture E-T-A preferred types in particularly high volumes.

Preferred types	Short description	Preferred ratings (A)							
		1	2	3	5	6	8	10	16
1110-F112-P1M1-	panel thickness 0.8…1.6 mm	•	•	•	•	•	•	•	•
1110-F212-P1M1-	panel thickness 1.8…3 mm	•	•	•	•	•	•	•	•

Ordering information

Type No.

1110 snap in panel mounting

Mounting

F1 panel thickness 0.8...1.6 mm (.031 -.063 in)

F2 panel thickness 1.8...3 mm (.071-.118 in)

Number of poles

1 1-pole protected

Actuator style

2 black push button/white indicator ring, push-push function

Terminal design

P1 blade terminals A6.3-0.8 (QC .250)

Characteristic curve

M1 medium delay

Current ratings

0.05...16A

1110 - F1 1 2 - P1 M1 - 0.05 A = ordering example

Please be informed that we have minimum ordering quantities to be observed.

Custom designed versions

Looking for a version you cannot find in our ordering number code? Please get in touch. We will be pleased to find a solution for you.

Standard current ratings and typical internal resistance values

Current rating (A)	Internal resistance (Ω)	Current rating (A)	Internal resistance (Ω)
0.05	442	2.5	0.19
0.1	110	3	0.12
0.2	27.8	3.5	0.09
0.3	12.4	4	0.07
0.4	7.0	5	0.05
0.5	4.5	6	0.04
0.6	3.1	7	≤ 0.02
0.7	2.3	8	≤ 0.02
1	1.1	10	≤ 0.02
1.5	0.41	12	≤ 0.02
1.8	0.38	15	≤ 0.02
2	0.25	16	≤ 0.02

This is a metric design and millimeter dimensions take precedence (mm/inch)

All dimensions without tolerances are for reference only. In the interest of improved design, performance and cost effectiveness the right to make changes in these specifications without notice is reserved. Product markings may not be exactly as the ordering codes. Errors and omissions excepted.

Approvals

Authority	Standard	Rated voltage	Current ratings	Approval logo
VDE	IEC/EN 60934	AC 250 V DC 50 V	0.05 A…10 A 0.05 A…16 A	
UL*	UL 1077 C22.2 No 235	AC 250 V AC 125 V DC 50 V	0.05 A…6 A 7 A…16 A 0.05 A…16 A	
CSA*	C22.2 No 235	AC 250 V AC 125 V DC 50 V	0.05 A…6 A 7 A…16 A 0.05 A…16 A	

*TC1, OL0

Dimensions

1110-F1.. / -F2..

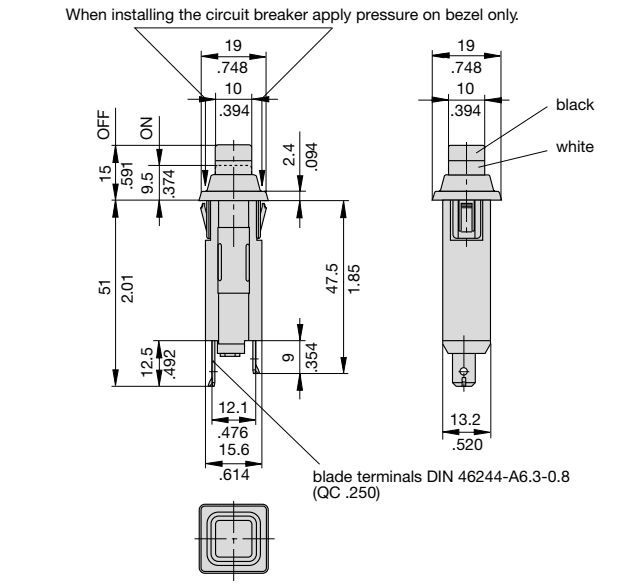

Panel cut out
1110-F1..-P1M1-...A

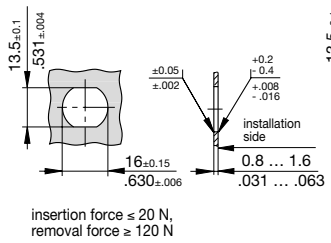

1110-F2..-P1M1-...A

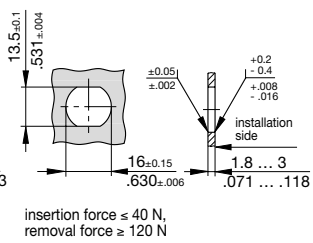

Installation drawing

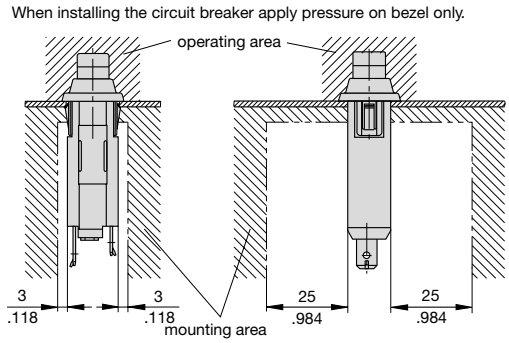

Internal connection diagram

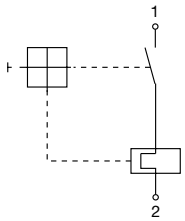

Typical time/current characteristics at +23 °C/+73.4 °F

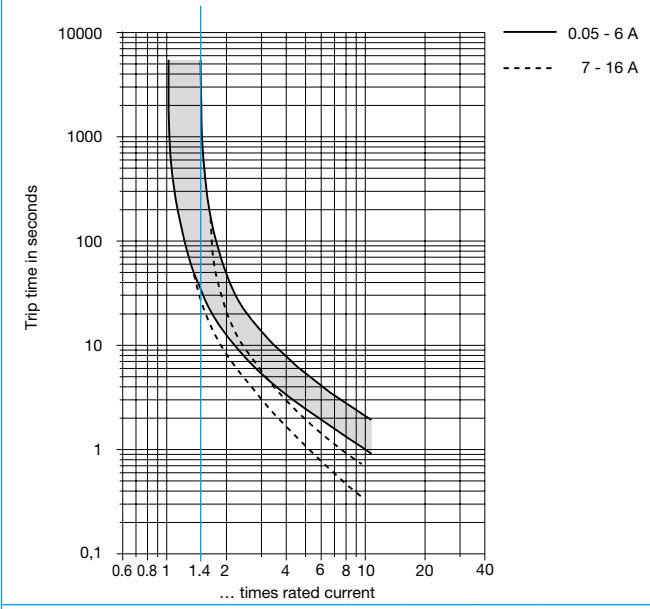

The time/current characteristic curve depends on the ambient temperature prevailing. In order to eliminate nuisance tripping, please multiply the circuit breaker current ratings by the derating factor shown below.

Ambient temperature °F °C	-4 -20	+14 -10	+32 0	+73.4 +23	+104 +40	+122 +50	+140 +60
Derating factor	0.76	0.84	0.92	1	1.08	1.16	1.24

Accessories – Water splash covers (transparent)

Push button splash cover transparent
Y 304 745 01 (IP64)

When using splash cover please note that the max. panel thickness is reduced by 0.5 mm/0.02 in.

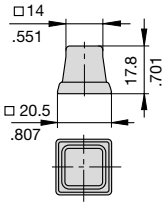

Terminal shroud
Y 305 602 01 (IP64)

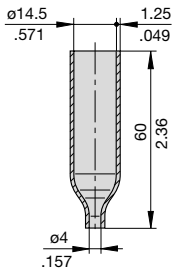

ООО «ЛайфЭлектроникс» “LifeElectronics” LLC

ИНН 7805602321 КПП 780501001 Р/С 40702810122510004610 ФАКБ "АБСОЛЮТ БАНК" (ЗАО) в г.Санкт-Петербурге К/С 30101810900000000703 БИК 044030703

Компания «Life Electronics» занимается поставками электронных компонентов импортного и отечественного производства от производителей и со складов крупных дистрибьюторов Европы, Америки и Азии.

С конца 2013 года компания активно расширяет линейку поставок компонентов по направлению коаксиальный кабель, кварцевые генераторы и конденсаторы (керамические, пленочные, электролитические), за счёт заключения дистрибьюторских договоров

Мы предлагаем:

- *Конкурентоспособные цены и скидки постоянным клиентам.*
- *Специальные условия для постоянных клиентов.*
- *Подбор аналогов.*
- *Поставку компонентов в любых объемах, удовлетворяющих вашим потребностям.*

- *Приемлемые сроки поставки, возможна ускоренная поставка.*
- *Доставку товара в любую точку России и стран СНГ.*
- *Комплексную поставку.*
- *Работу по проектам и поставку образцов.*
- *Формирование склада под заказчика.*

- *Сертификаты соответствия на поставляемую продукцию (по желанию клиента).*
- *Тестирование поставляемой продукции.*
- *Поставку компонентов, требующих военную и космическую приемку.*
- *Входной контроль качества.*
- *Наличие сертификата ISO.*

В составе нашей компании организован Конструкторский отдел, призванный помогать разработчикам, и инженерам.

Конструкторский отдел помогает осуществить:

- *Регистрацию проекта у производителя компонентов.*
- *Техническую поддержку проекта.*
- *Защиту от снятия компонента с производства.*
- *Оценку стоимости проекта по компонентам.*
- *Изготовление тестовой платы монтаж и пусконаладочные работы.*

Тел: +7 (812) 336 43 04 (многоканальный)
Email: org@lifeelectronics.ru

www.lifeelectronics.ru