THIS DRAWING IS UNPUBLISHED. RELEASED FOR PUBLICATION 20
© COPYRIGHT 20 BY - ALL RIGHTS RESERVED.

LOC	DIST
GP	00

REVISIONS

P	LTR	DESCRIPTION	DATE	DWN	APVD
	1	PRELIMINARY RELEASE	23NOV2011	TX	AC
	2	REVISE THE DRAWING	21DEC2011	TX	AC

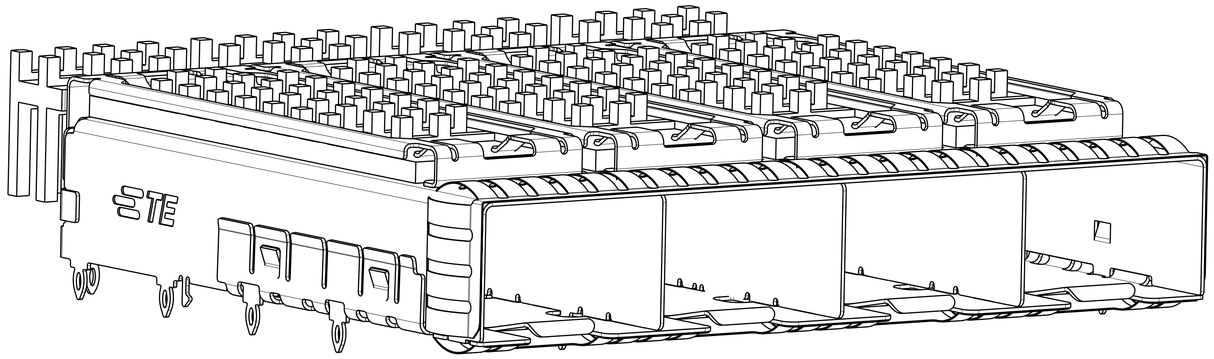

2170191-1
FINISHED ASSEMBLY

1. MATERIAL:
   CAGE ASSEMBLY: 0.25mm THICK NICKEL SILVER ALLOY
   HEATSINK CLIP: STAINLESS STEEL
   HEATSINK: ALUMINUM
2. FINISH:
   SPRINGS: MINIMUM OF 0.8um TIN PLATE OVER A MINIMUM OF 0.8um NICKEL UNDERPLATE.
   NON-PLATED EDGES PERMISSIBLE.
   HEATSINK: ELECTROLESS NICKEL
   HEASTSINK CLIP: PASSIVATE
3. PADS AND VIAS CHASSIS GROUND.
4. DATUM AND BASIC DIMENSION ESTABLISHED BY CUSTOMER.
5. MATES WITH SFP MSA COMPLIANT TRANSCEIVERS.
6. INTERPRETATION OF DATUM REFERENCE FRAME IN ACCORDANCE WITH SECT 4.4.1.1 OF ASME Y14.5M-1994.
7. REFERENCE APPLICATION SPEC. 114-13120, HOLE A, FOR RECOMMENDED DRILL HOLE DIAMETER AND PLATING THICKNESS.
8. REFERENCE APPLICATION SPEC. 114-13120, HOLE B, FOR RECOMMENDED DRILL HOLE DIAMETER AND PLATING THICKNESS.
9. HOLE PATTERN REPEATS FOR EACH PORT. SPACING BETWEEN PORTS IS 14.25mm.
10. MINIMUM PC BOARD THICKNESS:
    SINGLE SIDED = 1.50
    DOUBLE SIDED = 2.25
11. CERTAIN MATING TRANSCEIVERS MAY REQUIRE ADDITIONAL PCB THICKNESS THAT WOULD BE DETERMINED BY THE CUSTOMER.
12. PRODUCT COMPLIES WITH SPECIFICATION SFF-8433 IMPROVED PLUGGABLE FROM FACTOR FOR SFP+ GANGED CAGES.
13. DIMENSION APPLIES PRIOR TO INSERTION OF SFP MODULE

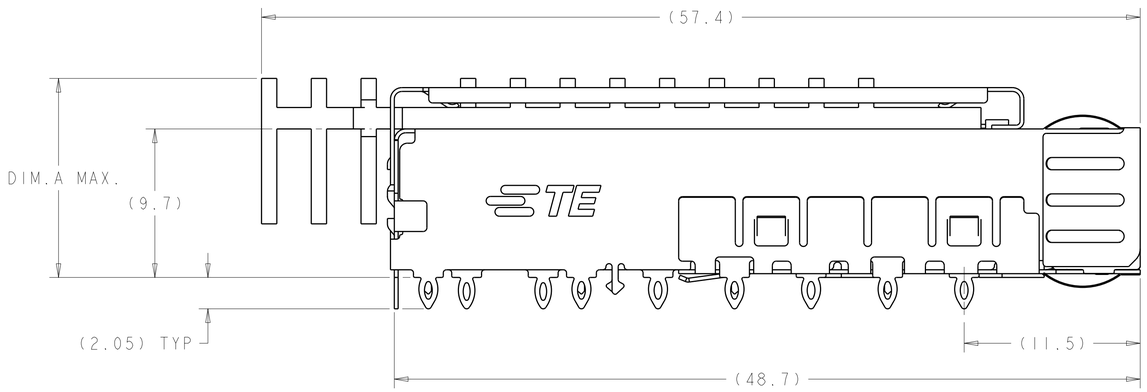

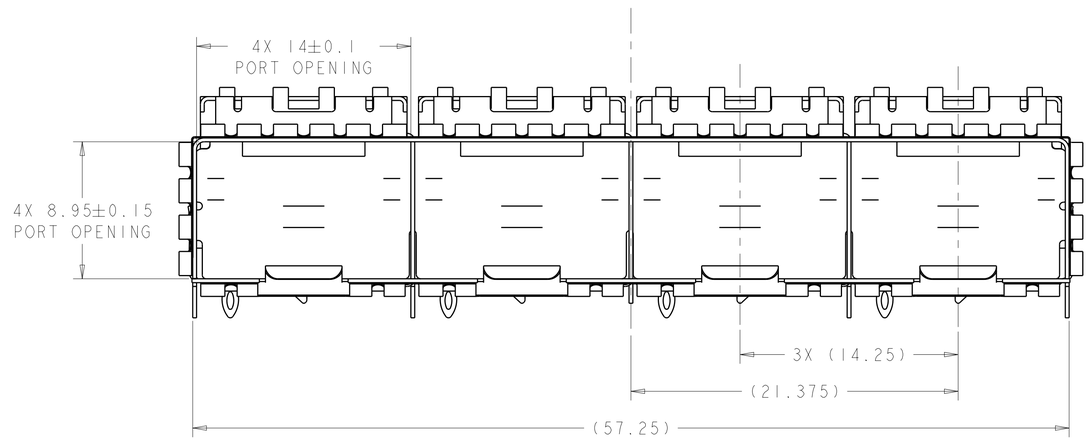

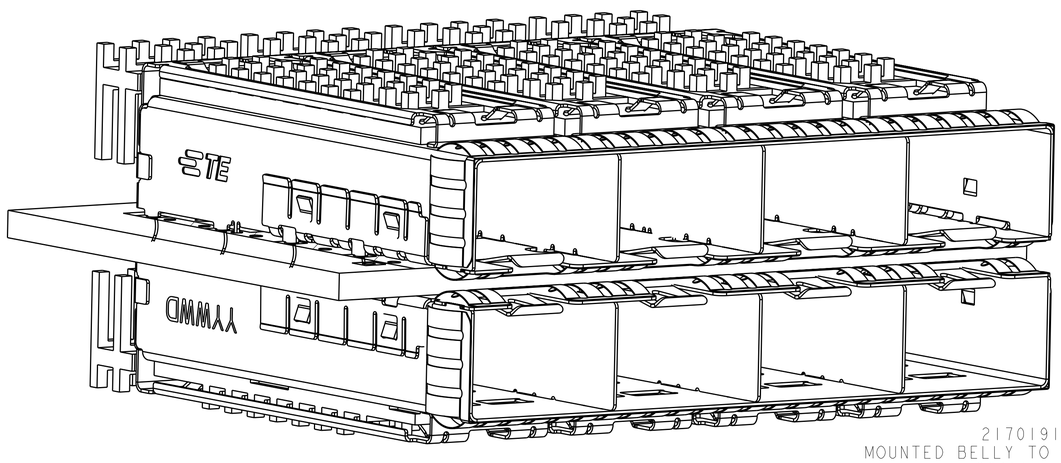

2170191-1
MOUNTED BELLY TO BELLY ON PCB
SCALE 4:1

A MAX	DESCRIPTION	PART NUMBER
20.2	HEAT SINK W/ THE FIRST ROW PIN	2170191-2
13	HEAT SINK W/O THE FIRST ROW PIN	2170191-1

THIS PRINT IS
PRELIMINARY
UNQUALIFIED PRODUCT
CONTACT PRODUCT ENGINEERING
BEFORE USING THIS PRINT

THIS DRAWING IS A CONTROLLED DOCUMENT.

DIMENSIONS: mm

TOLERANCES UNLESS OTHERWISE SPECIFIED:
0 PLC ±0.1
1 PLC ±0.1
2 PLC ±0.1
3 PLC ±0.1
4 PLC ±0.1
ANGLES ±1°0'

MATERIAL 1
FINISH 2

DWN	TIM XUE	23NOV2011
CHK	ALEX CAI	23NOV2011
APVD	ALEX CAI	23NOV2011

PRODUCT SPEC 108-2364
APPLICATION SPEC 114-13120
WEIGHT -

TE Connectivity

NAME SFP+ ENHANCED 1X4 CAGE ASSEMBLY
PRESS FIT, EXTERNAL EMI SPRINGS
WITH HEATSINK

PRELIMINARY

SIZE	CAGE CODE	DRAWING NO	RESTRICTED TO
A1	00779	C-2170191	-

CUSTOMER DRAWING | SCALE 5:1 | SHEET 1 OF 5 | REV 2

4805 (3/11)
Pro/ENGINEER DRAWING

THIS DRAWING IS UNPUBLISHED. RELEASED FOR PUBLICATION 20
© COPYRIGHT 20 BY - ALL RIGHTS RESERVED.

LOC	DIST
GP	00

REVISIONS

P	LTR	DESCRIPTION	DATE	DWN	APVD
	-	SEE SHEET 1	-	-	-

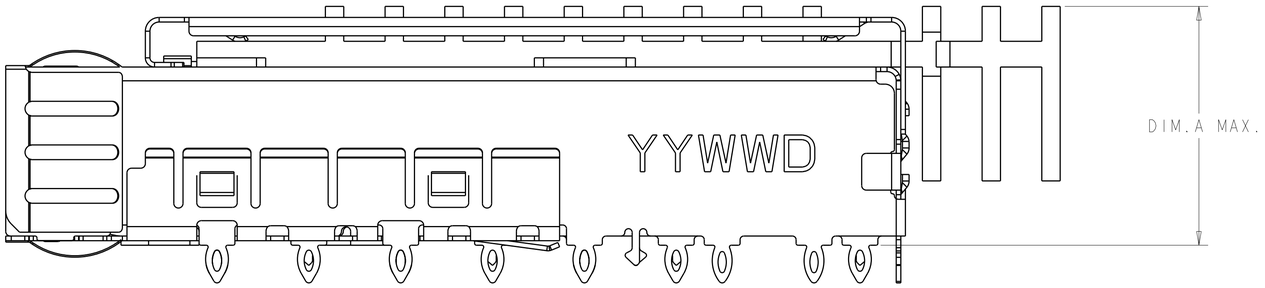

2170191-1 AS SHOWN
HEAT SINK W/O THE FIRST ROW PIN

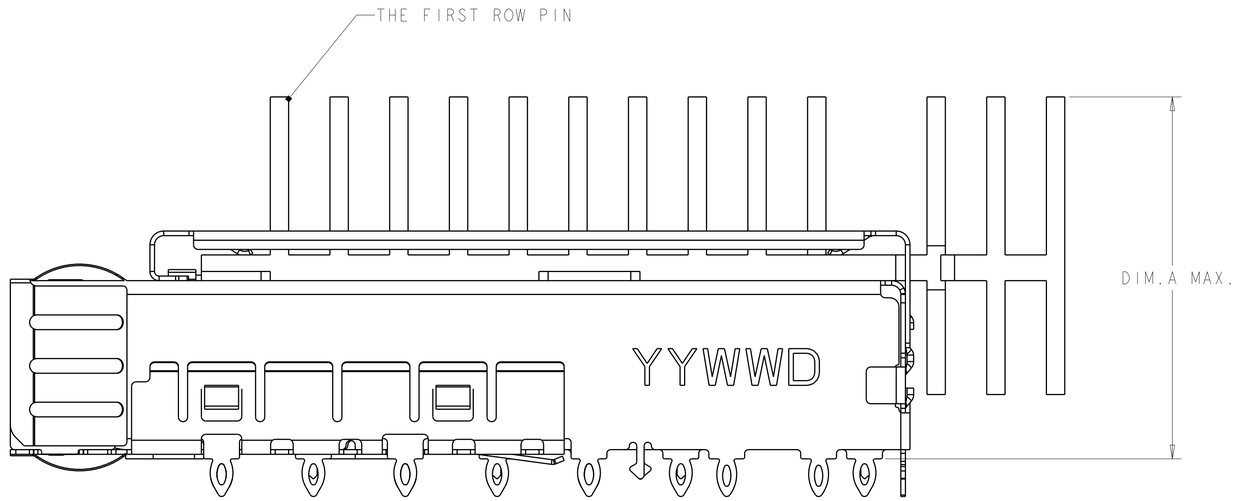

2170191-2 AS SHWON

THIS DRAWING IS A CONTROLLED DOCUMENT.

DIMENSIONS: mm

TOLERANCES UNLESS OTHERWISE SPECIFIED:
0 PLC ±0.1
1 PLC ±0.1
2 PLC ±0.1
3 PLC ±0.1
4 PLC ±0.1
ANGLES ±1°0'

MATERIAL
FINISH

DWN	TIM XUE	23NOV2011
CHK	ALEX CAI	23NOV2011
APVD	ALEX CAI	23NOV2011

PRODUCT SPEC: 108-2364
APPLICATION SPEC: 114-13120
WEIGHT: -

TE Connectivity

NAME: SFP+ ENHANCED 1X4 CAGE ASSEMBLY PRESS FIT, EXTERNAL EMI SPRINGS WITH HEATSINK

SIZE	CAGE CODE	DRAWING NO	RESTRICTED TO
A1	00779	C-2170191	-

CUSTOMER DRAWING | SCALE 5:1 | SHEET 2 OF 5 | REV 2

4805 (3/11)

THIS DRAWING IS UNPUBLISHED. RELEASED FOR PUBLICATION 20
© COPYRIGHT 20 BY - ALL RIGHTS RESERVED.

LOC	DIST
GP	00

REVISIONS

P	LTR	DESCRIPTION	DATE	DWN	APVD
	-	SEE SHEET 1	-	-	-

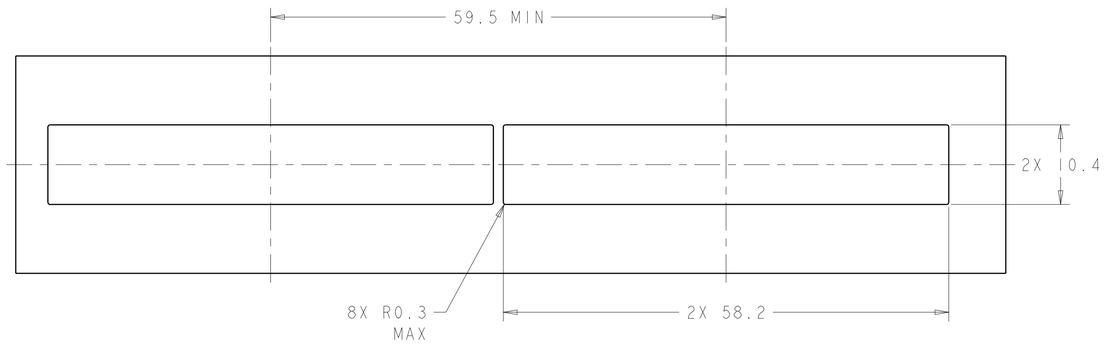

RECOMMENDED BEZEL CUT-OUT
SINGLE SIDED APPLICATIONS
SCALE 5:2

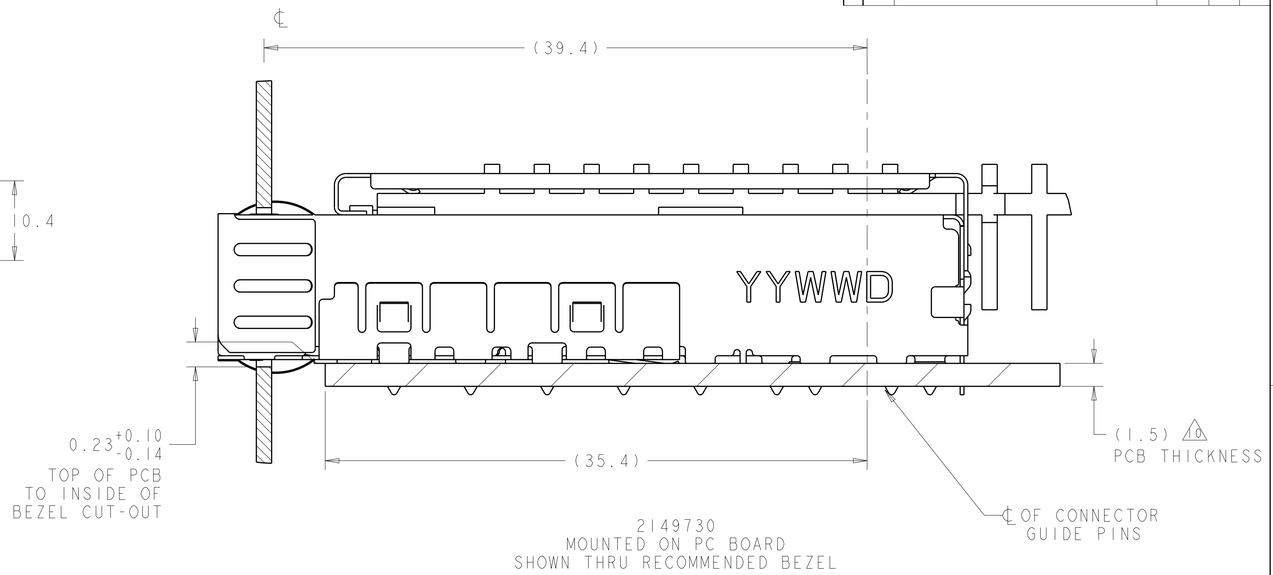

2149730
MOUNTED ON PC BOARD
SHOWN THRU RECOMMENDED BEZEL

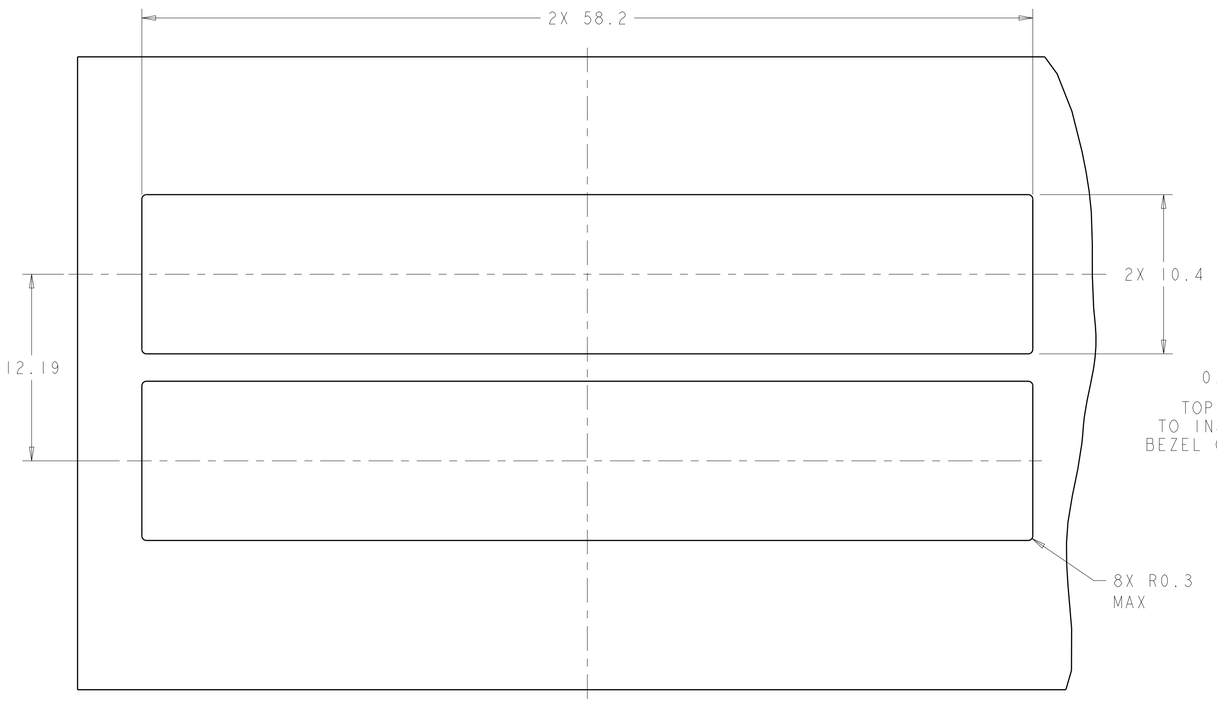

RECOMMENDED BEZEL CUT-OUT
BELLY TO BELLY APPLICATIONS

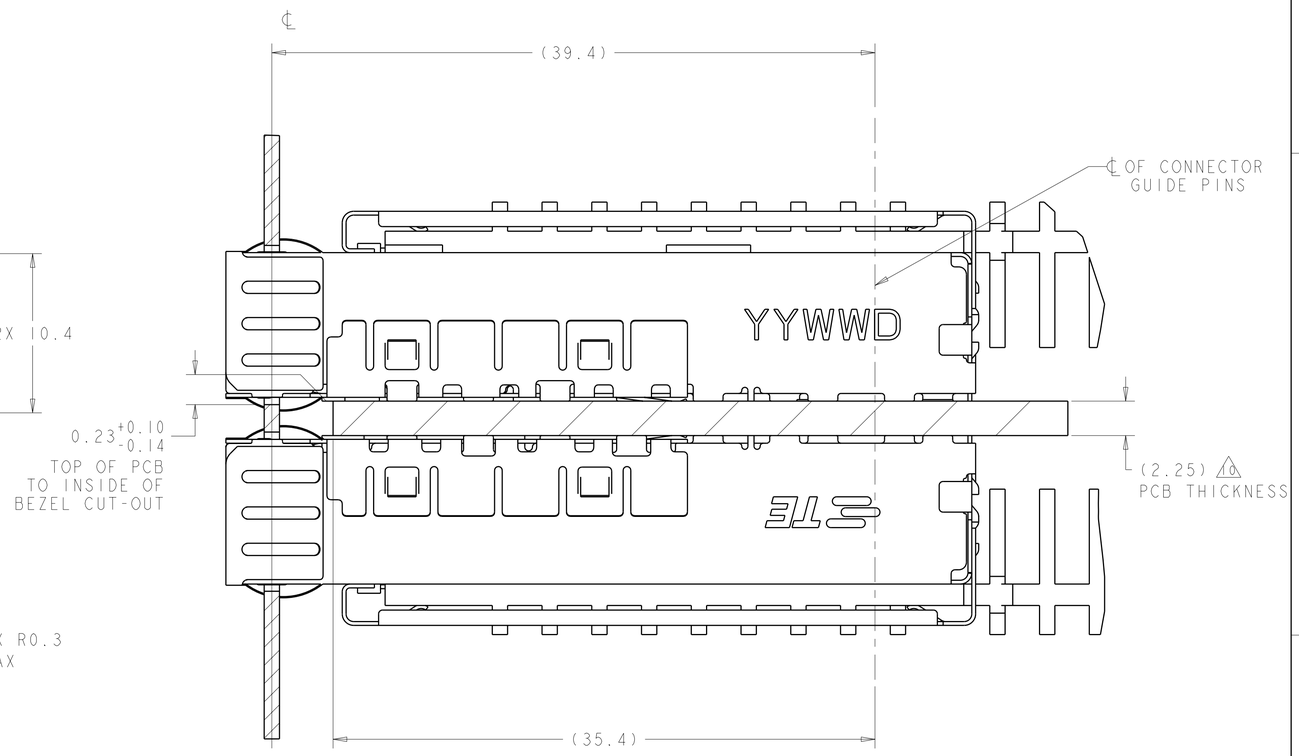

2149730
MOUNTED BELLY TO BELLY ON PC BOARD
SHOWN THRU RECOMMENDED BEZEL

THIS PRINT IS
PRELIMINARY
UNQUALIFIED PRODUCT
CONTACT PRODUCT ENGINEERING
BEFORE USING THIS PRINT

THIS DRAWING IS A CONTROLLED DOCUMENT.

DIMENSIONS: mm

TOLERANCES UNLESS OTHERWISE SPECIFIED:
0 PLC ±0.1
1 PLC ±0.1
2 PLC ±0.1
3 PLC ±0.1
4 PLC ±0.1
ANGLES ±1°0'

MATERIAL 1
FINISH 2

DWN	TIM XUE	23NOV2011
CHK	ALEX CAI	23NOV2011
APVD	ALEX CAI	23NOV2011
PRODUCT SPEC	108-2364	
APPLICATION SPEC	114-13120	
WEIGHT	-	

TE Connectivity

NAME: SFP+ ENHANCED 1X4 CAGE ASSEMBLY PRESS FIT, EXTERNAL EMI SPRINGS WITH HEATSINK

SIZE	CAGE CODE	DRAWING NO	RESTRICTED TO
A1	00779	C-2170191	-

CUSTOMER DRAWING

SCALE	SHEET	OF	REV
5:1	3	5	2

4805 (3/11)

THIS DRAWING IS UNPUBLISHED. RELEASED FOR PUBLICATION 20
© COPYRIGHT 20 BY - ALL RIGHTS RESERVED.

LOC	DIST
GP	00

REVISIONS

P	LTR	DESCRIPTION	DATE	DWN	APVD
	-	SEE SHEET 1	-	-	-

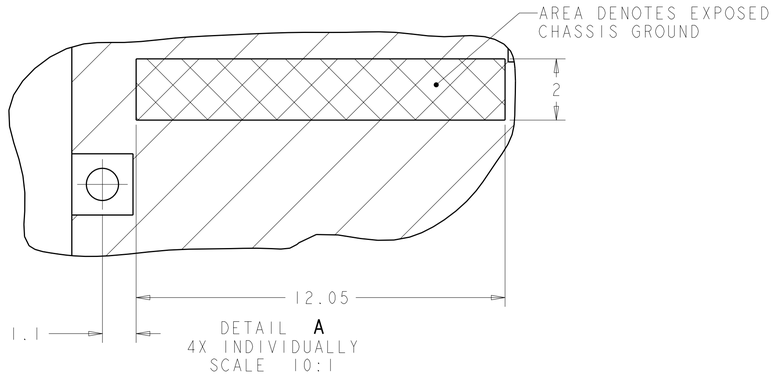

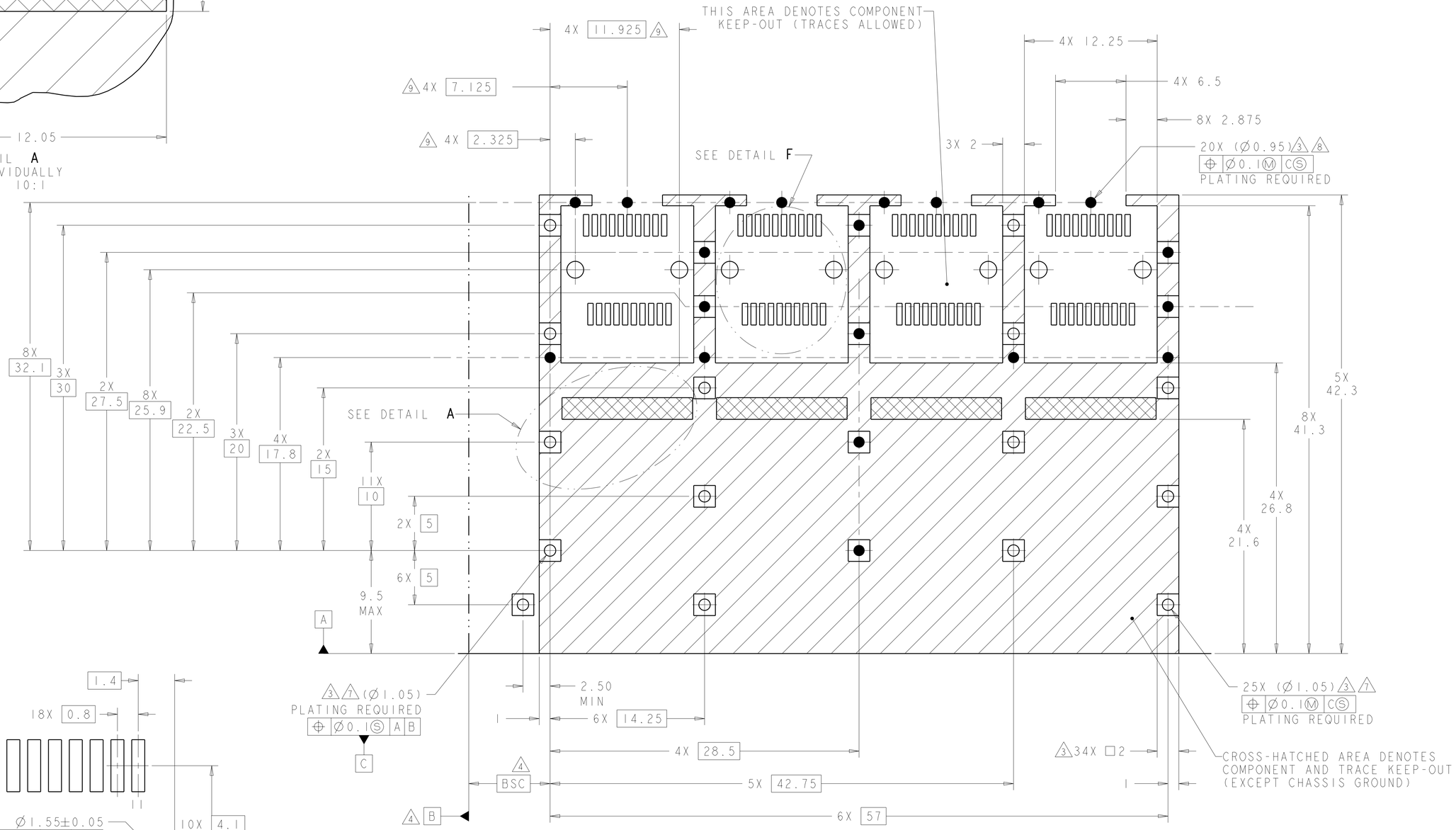

RECOMMENDED PCB CONFIGURATION
WITH KEEP-OUT AREAS
SINGLE SIDED APPLICATIONS 10
SCALE 5:1

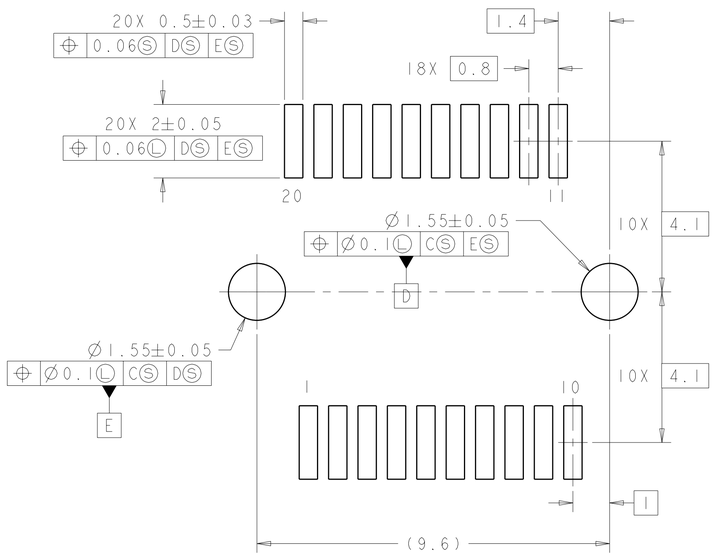

DETAIL F
RECOMMENDED PT CONNECTOR LAYOUT
4X INDIVIDUALLY
SCALE 12:1

THIS PRINT IS
PRELIMINARY
UNQUALIFIED PRODUCT
CONTACT PRODUCT ENGINEERING
BEFORE USING THIS PRINT

THIS DRAWING IS A CONTROLLED DOCUMENT.

DIMENSIONS: mm

TOLERANCES UNLESS OTHERWISE SPECIFIED:
0 PLC ±0.1
1 PLC ±0.1
2 PLC ±0.1
3 PLC ±0.1
4 PLC ±0.1
ANGLES ±1°0'

MATERIAL 1
FINISH 2

DWN	TIM XUE	23NOV2011
CHK	ALEX CAI	23NOV2011
APVD	ALEX CAI	23NOV2011
PRODUCT SPEC	108-2364	
APPLICATION SPEC	114-13120	
WEIGHT	-	

TE Connectivity

NAME: SFP+ ENHANCED 1X4 CAGE ASSEMBLY PRESS FIT, EXTERNAL EMI SPRINGS WITH HEATSINK

SIZE	CAGE CODE	DRAWING NO	RESTRICTED TO
A1	00779	C-2170191	-

CUSTOMER DRAWING

SCALE	SHEET	OF	REV
5:1	4	5	2

4805 (3/11)

THIS DRAWING IS UNPUBLISHED. RELEASED FOR PUBLICATION 20
© COPYRIGHT 20 BY - ALL RIGHTS RESERVED.

LOC	DIST
GP	00

REVISIONS

P	LTR	DESCRIPTION	DATE	DWN	APVD
	-	SEE SHEET 1	-	-	-

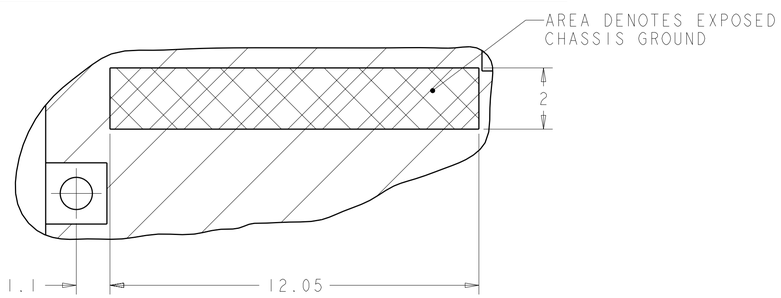

DETAIL B
4X INDIVIDUALLY
SCALE 10:1

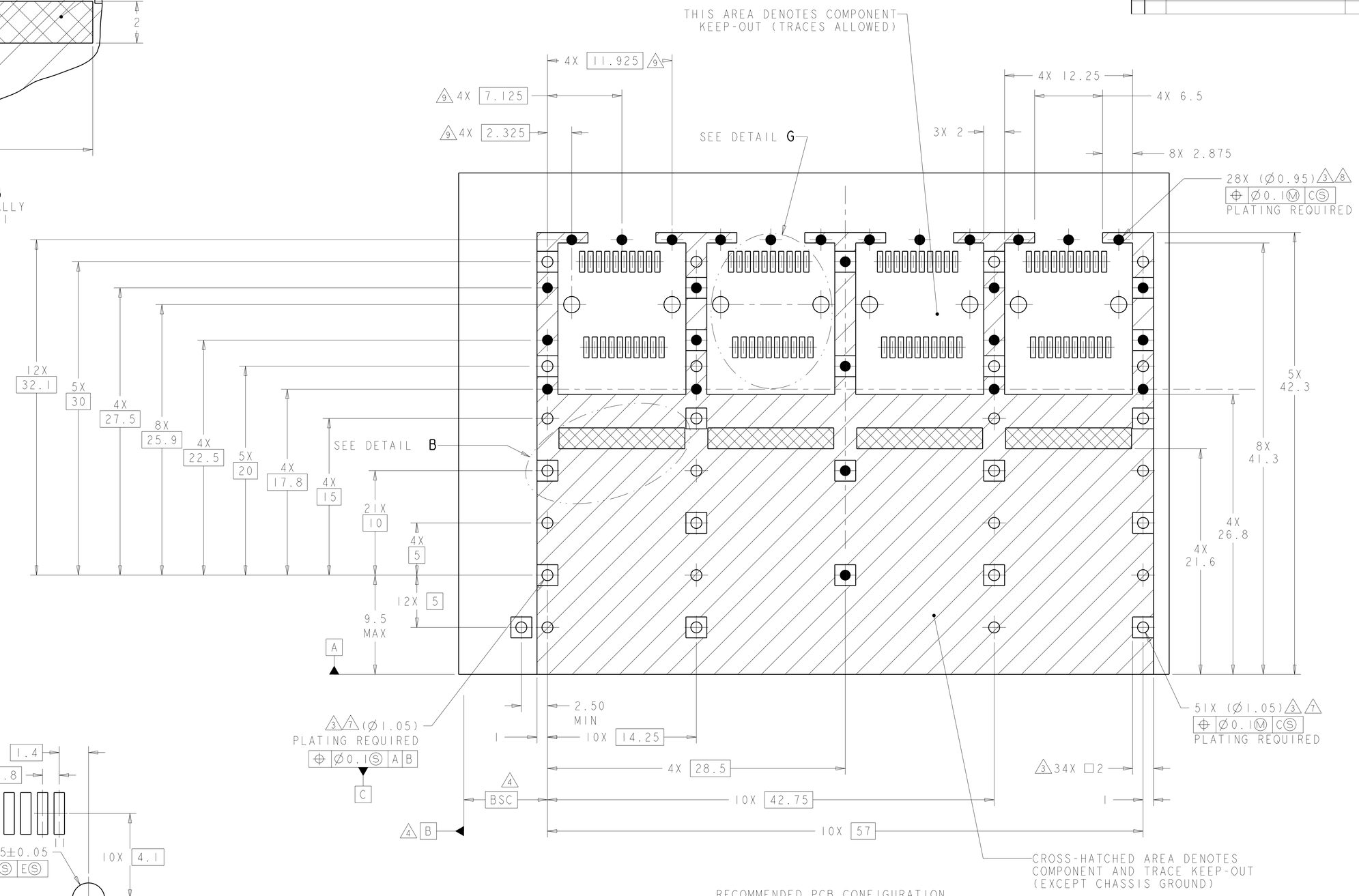

RECOMMENDED PCB CONFIGURATION
WITH KEEP-OUT AREAS
BELLY TO BELLY APPLICATIONS
SCALE 5:1 10

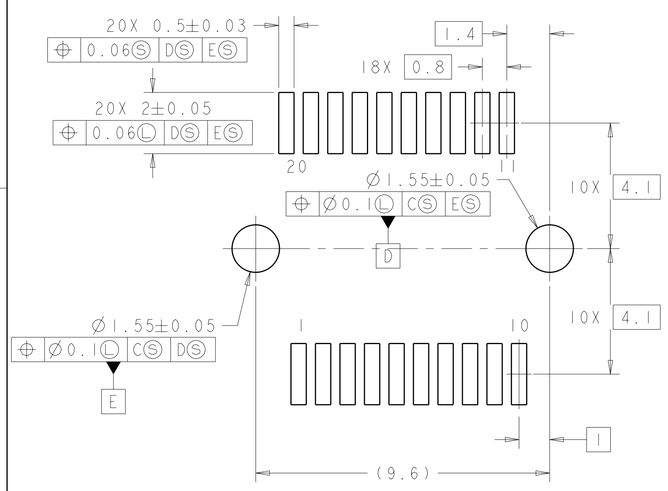

DETAIL G
RECOMMENDED PT CONNECTOR LAYOUT
8X INDIVIDUALLY
SCALE 10:1

THIS PRINT IS
PRELIMINARY
UNQUALIFIED PRODUCT
CONTACT PRODUCT ENGINEERING
BEFORE USING THIS PRINT

THIS DRAWING IS A CONTROLLED DOCUMENT.

DIMENSIONS: mm

TOLERANCES UNLESS OTHERWISE SPECIFIED:
0 PLC ±0.1
1 PLC ±0.1
2 PLC ±0.1
3 PLC ±0.1
4 PLC ±0.1
ANGLES ±1°0'
FINISH 2

MATERIAL 1

DWN	TIM XUE	23NOV2011
CHK	ALEX CAI	23NOV2011
APVD	ALEX CAI	23NOV2011

PRODUCT SPEC 108-2364
APPLICATION SPEC 114-13120
WEIGHT -

TE Connectivity

NAME SFP+ ENHANCED 1X4 CAGE ASSEMBLY PRESS FIT, EXTERNAL EMI SPRINGS WITH HEATSINK

SIZE	CAGE CODE	DRAWING NO	RESTRICTED TO
A1	00779	C-2170191	-

CUSTOMER DRAWING

SCALE	SHEET	OF	REV
5:1	5	5	2

4805 (3/11)

ООО «ЛайфЭлектроникс» “LifeElectronics” LLC

ИНН 7805602321 КПП 780501001 Р/С 40702810122510004610 ФАКБ "АБСОЛЮТ БАНК" (ЗАО) в г.Санкт-Петербурге К/С 30101810900000000703 БИК 044030703

Компания «Life Electronics» занимается поставками электронных компонентов импортного и отечественного производства от производителей и со складов крупных дистрибьюторов Европы, Америки и Азии.

С конца 2013 года компания активно расширяет линейку поставок компонентов по направлению коаксиальный кабель, кварцевые генераторы и конденсаторы (керамические, пленочные, электролитические), за счёт заключения дистрибьюторских договоров

Мы предлагаем:

- *Конкурентоспособные цены и скидки постоянным клиентам.*
- *Специальные условия для постоянных клиентов.*
- *Подбор аналогов.*
- *Поставку компонентов в любых объемах, удовлетворяющих вашим потребностям.*

- *Приемлемые сроки поставки, возможна ускоренная поставка.*
- *Доставку товара в любую точку России и стран СНГ.*
- *Комплексную поставку.*
- *Работу по проектам и поставку образцов.*
- *Формирование склада под заказчика.*

- *Сертификаты соответствия на поставляемую продукцию (по желанию клиента).*
- *Тестирование поставляемой продукции.*
- *Поставку компонентов, требующих военную и космическую приемку.*
- *Входной контроль качества.*
- *Наличие сертификата ISO.*

В составе нашей компании организован Конструкторский отдел, призванный помогать разработчикам, и инженерам.

Конструкторский отдел помогает осуществить:

- *Регистрацию проекта у производителя компонентов.*
- *Техническую поддержку проекта.*
- *Защиту от снятия компонента с производства.*
- *Оценку стоимости проекта по компонентам.*
- *Изготовление тестовой платы монтаж и пусконаладочные работы.*

Тел: +7 (812) 336 43 04 (многоканальный)
Email: org@lifeelectronics.ru

www.lifeelectronics.ru