AC'97 SoundPort® Codec

AD1819B

AC'97 FEATURES
Fully Compliant AC'97 Analog I/O Component
48-Terminal LQFP Package
Multibit ΣΔ Converter Architecture for Improved S/N Ratio >90 dB
16-Bit Stereo Full-Duplex Codec
Four Analog Line-Level Stereo Inputs for Connection from LINE, CD, VIDEO, and AUX
Two Analog Line-Level Mono Inputs for Speakerphone and PC BEEP
Mono MIC Input Switchable from Two External Sources
High Quality CD Input with Ground Sense
Stereo Line Level Output
Mono Output for Speakerphone
Power Management Support

ENHANCED FEATURES
Support for Multiple Codec Communications
DSP 16-Bit Serial Port Format
Variable 7 kHz to 48 kHz Sampling Rate with 1 Hz Resolution
Supports Modem Sample Rates and Filtering
Phat™ Stereo 3D Stereo Enhancement
VHDL and Verilog Models of Serial Port Available

FUNCTIONAL BLOCK DIAGRAM

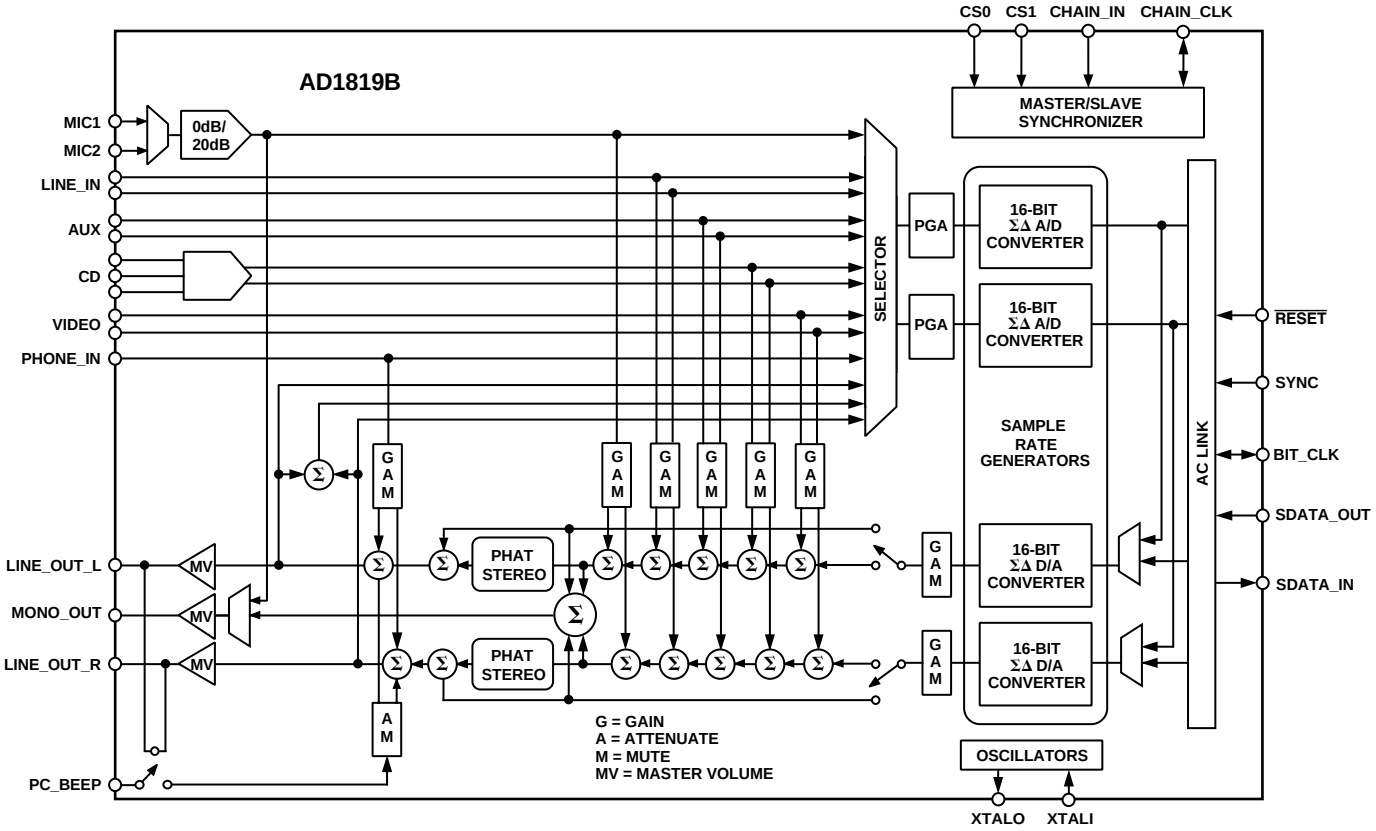

SoundPort is a registered trademark of Analog Devices, Inc.
Phat is a trademark of Analog Devices, Inc.

REV. 0

Information furnished by Analog Devices is believed to be accurate and reliable. However, no responsibility is assumed by Analog Devices for its use, nor for any infringements of patents or other rights of third parties which may result from its use. No license is granted by implication or otherwise under any patent or patent rights of Analog Devices.

One Technology Way, P.O. Box 9106, Norwood, MA 02062-9106, U.S.A.
Tel: 781/329-4700 World Wide Web Site: http://www.analog.com
Fax: 781/326-8703
© Analog Devices, Inc., 1999

PRODUCT OVERVIEW

The AD1819B SoundPort Codec is designed to meet all requirements of the *Audio Codec '97, Component Specification*, Revision 1.03, © 1996, Intel Corporation, found at www.Intel.com. In addition, the AD1819B supports multiple codec configurations (up to three per AC-Link), a DSP serial mode, variable sample rates, modem sample rates and filtering, and built-in Phat Stereo 3D enhancement.

The AD1819B is an analog front end for high performance PC audio, modem, or DSP applications. The AC'97 architecture defines a 2-chip audio solution comprising a digital audio controller, plus a high quality analog component that includes Digital-to-Analog Converters (DACs), Analog-to-Digital Converters (ADCs) mixer and I/O.

The main architectural features of the AD1819B are the high quality analog mixer section, two channels of ΣΔ ADC conversion, two channels of ΣΔ DAC conversion and Data Direct Scrambling (D^2S) rate generators. The AD1819B's left channel ADC and DAC are compatible for modem applications supporting irrational sample rates and modem filtering requirements.

FUNCTIONAL DESCRIPTION

This section overviews the functionality of the AD1819B and is intended as a general introduction to the capabilities of the device. Detailed reference information may be found in the descriptions of the Indexed Control Registers.

Analog Inputs

The codec contains a stereo pair of ΣΔ ADCs. Inputs to the ADC may be selected from the following analog signals: telephony (PHONE_IN), mono microphone (MIC1 or MIC2), stereo line (LINE_IN), auxiliary line input (AUX), stereo CD ROM (CD), stereo audio from a video source (VIDEO) and post-mixed stereo or mono line output (LINE_OUT).

Analog Mixing

PHONE_IN, MIC1 or MIC2, LINE_IN, AUX, CD and VIDEO can be mixed in the analog domain with the stereo output from the DACs. Each channel of the stereo analog inputs may be independently gained or attenuated from +12 dB to –34.5 dB in 1.5 dB steps. The summing path for the mono inputs (PHONE_IN, MIC1, and MIC2 to LINE_OUT) duplicates mono channel data on both the left and right LINE_OUT. Additionally, the PC attention signal (PC_BEEP) may be mixed with the line output. A switch allows the output of the DACs to bypass the Phat Stereo 3D enhancement.

Analog-to-Digital Signal Path

The selector sends left and right channel signals to the programmable gain amplifier (PGA). The PGA following the selector allows independent gain for each channel entering the ADC from 0 dB to +22.5 dB in 1.5 dB steps.

Each channel of the ADC is independent, and can process left and right channel data at different sample rates. All programmed sample rates from 7 kHz to 48 kHz have a resolution of 1 Hz. The AD1819B also supports irrational V.34 sample rates.

Sample Rates and D^2S

The AD1819B default mode sets the codec to operate at 48 kHz sample rates. The converter pairs may process left and right channel data at different sample rates. The AD1819B sample rate generator allows the codec to instantaneously change and process sample rates from 7 kHz to 48 kHz with a resolution of 1 Hz. The in-band integrated noise and distortion artifacts introduced by rate conversions are below –90 dB. The AD1819B uses a 4-bit D/A structure and Data Directed Scrambling (D^2S) to enhance noise immunity on motherboards and in PC enclosures, and to suppress idle tones below the device's quantization noise floor. The D^2S process pushes noise and distortion artifacts caused by errors in the multibit D/A conversion process to frequencies beyond the audible range of the human ear and then filters them.

Digital-to-Analog Signal Path

The analog output of the DAC may be gained or attenuated from +12 dB to –34.5 dB in 1.5 dB steps, and summed with any of the analog input signals. The summed analog signal enters the Master Volume stage where each channel of the mixer output may be attenuated from 0 dB to –46.5 dB in 1.5 dB steps or muted.

Host-Based Echo Cancellation Support

The AD1819B supports time correlated I/O data format by presenting mic data on the left channel of the ADC and the mono summation of left and right output on the right channel. The ADC is splittable; left and right ADC data can be sampled at different rates.

Telephony Modem Support

The AD1819B contains a V.34-capable analog front end for supporting host-based and data pump modems. The modem DAC typical dynamic range is 90 dB over a 4.2 kHz analog output passband where F_S = 12.8 kHz. The left channel of the ADC and DAC may be used to convert modem data at the same sample rate in the range between 7 kHz and 48 kHz. All programmed sample rates have a resolution of 1 Hz. The AD1819B supports irrational V.34 sample rates with 8/7 and 10/7 selectable sample rate multiplier coefficients.

Differences Between the AD1819A and AD1819B

The voltage reference (V_{REF}) of the AD1819B remains active while $\overline{RESET}$ is asserted. This eliminates the audible artifacts associated with the $\overline{RESET}$ LO to HI transitions that can occur during a Windows boot (power-up) or Windows warm restart (reset).

STANDARD TEST CONDITIONS UNLESS OTHERWISE NOTED

Temperature	25	°C
Digital Supply (V_{DD})	5.0	V
Analog Supply (V_{CC})	5.0	V
Sample Rate (F_S)	48	kHz
Input Signal	1008	Hz
Analog Output Passband	20 Hz to 20 kHz	
V_{IH} (AC-Link)	2.0	V
V_{IL} (AC-Link)	0.8	V
V_{IH} (CS0, CS1, CHAIN_IN)	4.0	V
V_{IL} (CHAIN_CLK)	1.0	V

DAC Test Conditions
Calibrated
0 dB Attenuation
Input 0 dB
10 kΩ Output Load
Mute Off

ADC Test Conditions
Calibrated
0 dB Gain
Input –3 dB Relative to Full Scale
Line Input Selected

ANALOG INPUT

Parameter	Min	Typ	Max	Units
Input Voltage (RMS Values Assume Sine Wave Input)				
LINE_IN, AUX, CD, VIDEO, PHONE_IN, PC_BEEP		1		V rms
		2.83		V p-p
MIC1, MIC2 with +20 dB Gain (M20 = 1)		0.1		V rms
		0.283		V p-p
MIC1, MIC2 with 0 dB Gain (M20 = 0)		1		V rms
		2.83		V p-p
Input Impedance*	10			kΩ
Input Capacitance*		15		pF

PROGRAMMABLE GAIN AMPLIFIER—ADC

Parameter	Min	Typ	Max	Units
Step Size (0 dB to 22.5 dB)		1.5		dB
PGA Gain Range Span		22.5		dB

ANALOG MIXER— INPUT GAIN/AMPLIFIERS/ATTENUATORS

Parameter	Min	Typ	Max	Units
Dynamic Range (–60 dB Input THD+N, Referenced to Full Scale, A-Weighted)				
CD to LINE_OUT	90			dB
Other to LINE_OUT*		90		dB
Step Size (+12 dB to –34.5 dB): (All Steps Tested)				
MIC, LINE_IN, AUX, CD, VIDEO, PHONE_IN, DAC		1.5		dB
Input Gain/Attenuation Range				
MIC, LINE_IN, AUX, CD, VIDEO, PHONE_IN, DAC		46.5		dB
Step Size (0 dB to –45 dB): (All Steps Tested)				
PC_BEEP		3.0		dB
Input Gain/Attenuation Range: PC_BEEP		45		dB

DIGITAL DECIMATION AND INTERPOLATION FILTERS*

Parameter	Min	Typ	Max	Units
Passband	0		$0.4 \times F_S$	Hz
Passband Ripple			±0.09	dB
Transition Band	$0.4 \times F_S$		$0.6 \times F_S$	Hz
Stopband	$0.6 \times F_S$		∞	Hz
Stopband Rejection	–74			dB
Group Delay			$12/F_S$	sec
Group Delay Variation Over Passband			0.0	µs

*Guaranteed, not tested.
Specifications subject to change without notice.

AD1819B–SPECIFICATIONS

ANALOG-TO-DIGITAL CONVERTERS

Parameter	Min	Typ	Max	Units
Resolution		16		Bits
Total Harmonic Distortion (THD)			0.02	%
			–74	dB
Dynamic Range (–60 dB Input THD+N Referenced to Full Scale, A-Weighted)	84	87		dB
Signal-to-Intermodulation Distortion* (CCIF Method)		85		dB
ADC Crosstalk*				
Line Inputs (Input L, Ground R, Read R; Input R, Ground L, Read L)		–100	–90	dB
Line to Other		–90	–85	dB
Gain Error (Full-Scale Span Relative to Nominal Input Voltage)			±10	%
Interchannel Gain Mismatch (Difference of Gain Errors)			±0.5	dB
ADC Offset Error			±5	mV

DIGITAL-TO-ANALOG CONVERTERS

Parameter	Min	Typ	Max	Units
Resolution		16		Bits
Total Harmonic Distortion (THD) LINE_OUT			0.02	%
			–74	dB
Dynamic Range (–60 dB Input THD+N Referenced to Full Scale, A-Weighted)	85	90		dB
Signal-to-Intermodulation Distortion* (CCIF Method)		85		dB
Gain Error (Full-Scale Span Relative to Nominal Input Voltage)			±10	%
Interchannel Gain Mismatch (Difference of Gain Errors)			±0.5	dB
DAC Crosstalk* (Input L, Zero R, Measure LINE_OUT_R; Input R,				dB
Zero L, Measure LINE_OUT_L)			–80	dB
Total Out-of-Band Energy (Measured from $0.6 \times F_S$ to 20 kHz)*		–40		dB

MASTER VOLUME

Parameter	Min	Typ	Max	Units
Step Size (0 dB to –46.5 dB)				
LINE_OUT_L, LINE_OUT_R, MONO_OUT		1.5		dB
Output Attenuation Range Span		46.5		dB
Mute Attenuation of 0 dB Fundamental*			75	dB

ANALOG OUTPUT

Parameter	Min	Typ	Max	Units
Full-Scale Output Voltage		1		V rms
		2.83		V p-p
Output Impedance*			800	Ω
External Load Impedance	10			kΩ
Output Capacitance*		15		pF
External Load Capacitance			100	pF
V_{REF}	2.00	2.25	2.50	V
V_{REF} Current Drive			100	µA
V_{REFOUT}		2.25		V
V_{REFOUT} Current Drive			5	mA
Mute Click (Muted Output Minus Unmuted Midscale DAC Output)*		±5		mV

*Guaranteed, not tested.
Specifications subject to change without notice.

STATIC DIGITAL SPECIFICATIONS

Parameter	Min	Typ	Max	Units
High-Level Input Voltage (V_{IH}): Digital Inputs	$0.4 \times DV_{DD}$			V
Low-Level Input Voltage (V_{IL})			$0.2 \times DV_{DD}$	V
High-Level Output Voltage (V_{OH}), I_{OH} = 2 mA	$0.5 \times DV_{DD}$			V
Low-Level Output Voltage (V_{OL}), I_{OL} = 2 mA			$0.2 \times DV_{DD}$	V
Input Leakage Current	–10		10	µA
Output Leakage Current	–10		10	µA

POWER SUPPLY

Parameter	Min	Typ	Max	Units
Power Supply Range—Analog	4.5		5.5	V
Power Supply Range—Digital	4.5		5.5	V
Power Supply Current		120		mA
Power Dissipation		600		mW
Analog Supply Current		60		mA
Digital Supply Current		60		mA
Power Supply Rejection (100 mV p-p Signal @ 1 kHz)* (At Both Analog and Digital Supply Pins, Both ADCs and DACs)		–40		dB

CLOCK SPECIFICATIONS*

Parameter	Min	Typ	Max	Units
Input Clock Frequency		24.576		MHz
Recommended Clock Duty Cycle	40	50	60	%

POWER-DOWN STATES

Parameter	Set Bits	Min	Typ	Max	Units
ADCs and Input Mux Power-Down	PR0		110		mA
DACs Power-Down	PR1		100		mA
Analog Mixer Power-Down (V_{REF} and V_{REFOUT} On)	PR1, PR2		54		mA
Analog Mixer Power-Down (V_{REF} and V_{REFOUT} Off)	PR0, PR1, PR3		47		mA
Digital Interface Power-Down*	PR4		120		mA
Internal Clocks Disabled*	PR0, PR1, PR4, PR5		85		mA
ADC and DAC Power-Down	PR0, PR1		85		mA
V_{REF} Standby Mode*	PR0, PR1, PR2, PR4, PR5		55		mA
Total Power-Down	PR0, PR1, PR2, PR3, PR4, PR5		220		µA
$\overline{\text{RESET}}$ (Low)			250		µA

*Guaranteed, not tested.
Specifications subject to change without notice.

TIMING PARAMETERS (GUARANTEED OVER OPERATING TEMPERATURE RANGE)

Parameter	Symbol	Min	Typ	Max	Units
$\overline{\text{RESET}}$ Active Low Pulsewidth	t_{RST_LOW}	1.0			µs
$\overline{\text{RESET}}$ Inactive to BIT_CLK Start-Up Delay	$t_{RST2CLK}$	162.8			ns
SYNC Active High Pulsewidth	t_{SYNC_HIGH}	0.0814	1.3		µs
SYNC Low Pulsewidth	t_{SYNC_LOW}		19.5		µs
SYNC Inactive to BIT_CLK Start-Up Delay	$t_{SYNC2CLK}$	162.8			ns
BIT_CLK Frequency			12.288		MHz
BIT_CLK Period	t_{CLK_PERIOD}		81.4		ns
BIT_CLK Output Jitter*				750	ps
BIT_CLK High Pulsewidth	t_{CLK_HIGH}	32.56	40.7	48.84	ns
BIT_CLK Low Pulsewidth	t_{CLK_LOW}	32.56	40.7	48.84	ns
SYNC Frequency			48.0		kHz
SYNC Period	t_{SYNC_PERIOD}		20.8		µs
Setup to Falling Edge of BIT_CLK	t_{SETUP}	15.0			ns
Hold from Falling Edge of BIT_CLK	t_{HOLD}	15.0			ns
BIT_CLK Rise Time	$t_{RISE\ CLK}$		4		ns
BIT_CLK Fall Time	$t_{FALL\ CLK}$		4		ns
SYNC Rise Time	$t_{RISE\ SYNC}$		4		ns
SYNC Fall Time	$t_{FALL\ SYNC}$		4		ns
SDATA_IN Rise Time	$t_{RISE\ DIN}$		4		ns
SDATA_IN Fall Time	$t_{FALL\ DIN}$		4		ns
SDATA_OUT Rise Time	$t_{RISE\ DOUT}$		4		ns
SDATA_OUT Fall Time	$t_{FALL\ DOUT}$		4		ns
End of Slot 2 to BIT_CLK, SDATA_IN Low	t_{S2_PDOWN}			1.0	µs
Setup to Trailing Edge of RESET (Applies to SYNC, SDATA_OUT)	$t_{SETUP2RST}$	15			ns
Rising Edge of $\overline{\text{RESET}}$ to HI-Z Delay	t_{OFF}			25	ns

*Output Jitter is directly dependent on crystal input jitter.

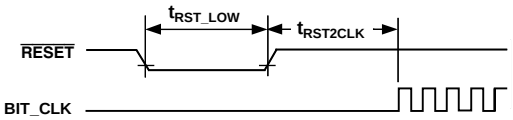

Figure 1. Cold Reset

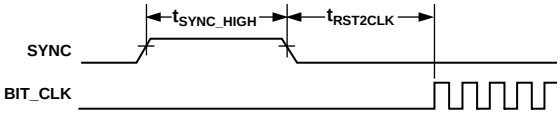

Figure 2. Warm Reset

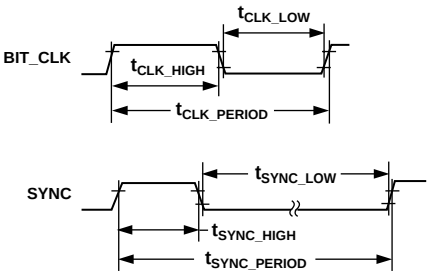

Figure 3. Clock Timing

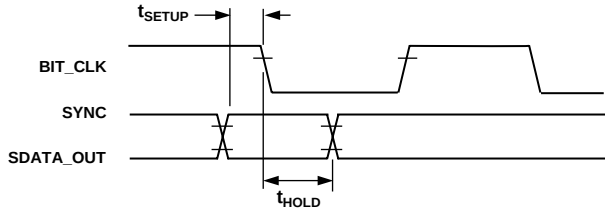

Figure 4. Data Setup and Hold

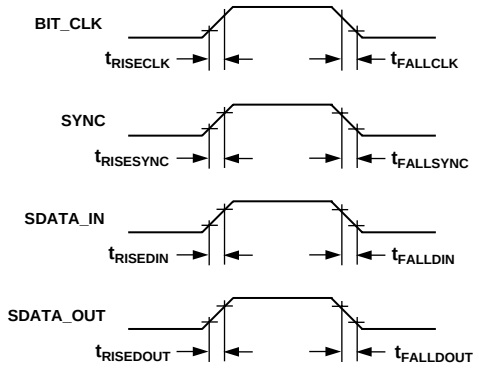

Figure 5. Signal Rise and Fall Time

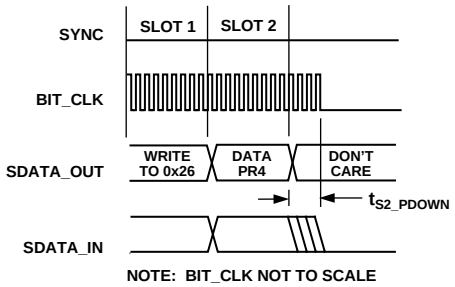

Figure 6. AC-Link, Link Low Power Mode Timing

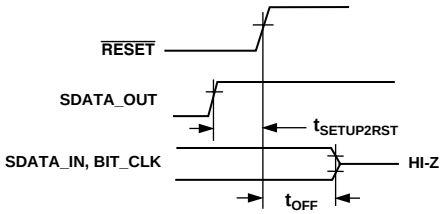

Figure 7. ATE Test Mode

ABSOLUTE MAXIMUM RATINGS*

Parameter	Min	Max	Units
Power Supplies			
Analog (AV_{DD})	–0.3	6.0	V
Digital (DV_{DD})	–0.3	6.0	V
Input Current (Except Supply Pins)		±10.0	mA
Analog Input Voltage (Signal Pins)	–0.3	AV_{DD} + 0.3	V
Digital Input Voltage (Signal Pins)	–0.3	DV_{DD} + 0.3	V
Ambient Temperature (Operating)	–40	+85	°C
Storage Temperature	–65	+150	°C

*Stresses greater than those listed under Absolute Maximum Ratings may cause permanent damage to the device. This is a stress rating only; functional operation of the device at these or any other conditions above those indicated in the operational section of this specification is not implied. Exposure to absolute maximum rating conditions for extended periods may affect device reliability.

ORDERING GUIDE

Model	Temperature Range	Package Description	Package Option*
AD1819BJST	–40°C to +85°C	48-Terminal LQFP	ST-48

*ST = Thin Quad Flatpack.

ENVIRONMENTAL CONDITIONS

Ambient Temperature Rating

$T_{AMB} = T_{CASE} - (P_D \times \theta_{CA})$

T_{CASE} = Case Temperature in °C

P_D = Power Dissipation in W

θ_{CA} = Thermal Resistance (Case-to-Ambient)

θ_{JA} = Thermal Resistance (Junction-to-Ambient)

θ_{JC} = Thermal Resistance (Junction-to-Case)

Package	θ_{JA}	θ_{JC}	θ_{CA}
LQFP	76.2°C/W	17°C/W	59.2°C/W

CAUTION

ESD (electrostatic discharge) sensitive device. Electrostatic charges as high as 4000 V readily accumulate on the human body and test equipment and can discharge without detection. Although the AD1819B features proprietary ESD protection circuitry, permanent damage may occur on devices subjected to high energy electrostatic discharges. Therefore, proper ESD precautions are recommended to avoid performance degradation or loss of functionality.

PIN CONFIGURATION

48-Terminal LQFP
(ST-48)

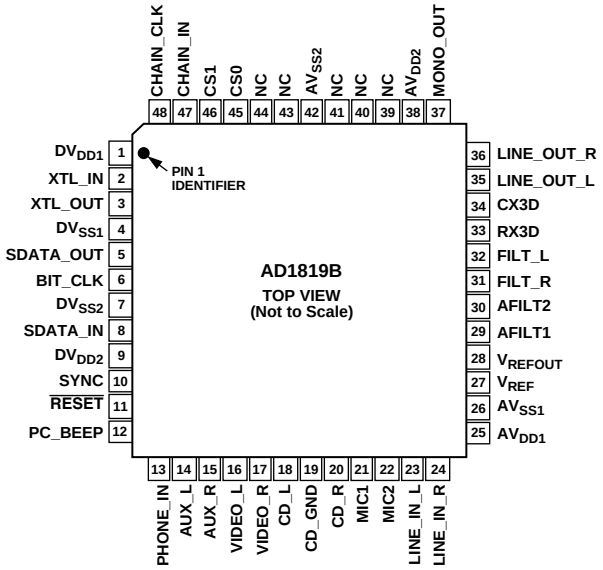

PIN FUNCTION DESCRIPTIONS

Digital I/O

Pin Name	LQFP	I/O	Description
XTL_IN	2	I	24.576 MHz Crystal or Clock Input
XTL_OUT	3	O	24.576 MHz Crystal Output
SDATA_OUT	5	I	Serial Data Output. Serial, Time Division Multiplexed, AD1819B Input Stream
BIT_CLK	6	O/I*	Bit Clock Input, 12.288 MHz Serial Data Clock. Daisy Chain Output Clock
SDATA_IN	8	O	Serial Data Input. Serial, Time Division Multiplexed, AD1819B Output Stream
SYNC	10	I	48 kHz Fixed Rate Sample Sync Clock
$\overline{\text{RESET}}$	11	I	Reset. AC-Link Master Hardware Reset

*Input if the AD1819B is configured as Slave 1 or Slave 2.

Daisy Chain Connections

Pin Name	LQFP	I/O	Description
CS0	45	I	Daisy Chain Codec Select
CS1	46	I	Daisy Chain Codec Select
CHAIN_IN	47	I	Daisy Chain Data Input
CHAIN_CLK	48	I/O*	24.576 MHz Buffered Clock Input/Output

*Output when configured as Master. Input when configured as Slave 1 or Slave 2.

Analog I/O

These signals connect the AD1819B component to analog sources and sinks, including microphones and speakers.

Pin Name	LQFP	I/O	Description
PC_BEEP	12	I	PC Beep. PC Speaker Beep Pass-Through
PHONE_IN	13	I	Phone. From Telephony Subsystem Speakerphone or Handset
AUX_L	14	I	Auxiliary Input Left Channel
AUX_R	15	I	Auxiliary Input Right Channel
VIDEO_L	16	I	Video Audio Left Channel
VIDEO_R	17	I	Video Audio Right Channel
CD_L	18	I	CD Audio Left Channel
CD_GND	19	I	CD Audio Analog Ground Sense for Differential CD Input
CD_R	20	I	CD Audio Right Channel
MIC1	21	I	Microphone 1. Desktop Microphone Input
MIC2	22	I	Microphone 2. Second Microphone Input
LINE_IN_L	23	I	Line In Left Channel
LINE_IN_R	24	I	Line In Right Channel
LINE_OUT_L	35	O	Line Out Left Channel
LINE_OUT_R	36	O	Line Out Right Channel
MONO_OUT	37	O	Monaural Output to Telephony Subsystem Speakerphone

Filter/Reference

Pin Name	LQFP	I/O	Description
V_{REF}	27	O	Voltage Reference Filter
V_{REFOUT}	28	O	Voltage Reference Output 5 mA Drive (Intended for Mic Bias)
AFILT1	29	O	Antialiasing Filter Capacitor—ADC Right Channel
AFILT2	30	O	Antialiasing Filter Capacitor—ADC Left Channel
FILT_R	31	O	AC-Coupling Filter Capacitor—ADC Right Channel
FILT_L	32	O	AC-Coupling Filter Capacitor—ADC Left Channel
RX3D	33	O	3D Phat Stereo Enhancement—Capacitor
CX3D	34	I	3D Phat Stereo Enhancement—Capacitor

Power and Ground Signals

Pin Name	LQFP	I/O	Description
DV_{DD1}	1	I	Digital V_{DD}—5.0 V
DV_{SS1}	4	I	Digital GND
DV_{SS2}	7	I	Digital GND
DV_{DD2}	9	I	Digital V_{DD}—5.0 V
AV_{DD1}	25	I	Analog V_{DD}—5.0 V
AV_{SS1}	26	I	Analog GND
AV_{DD2}	38	I	Analog V_{DD}—5.0 V
AV_{SS2}	42	I	Analog GND

No Connects

Pin Name	LQFP	I/O	Description
NC	39		No Connect
NC	40		No Connect
NC	41		No Connect
NC	43		No Connect
NC	44		No Connect

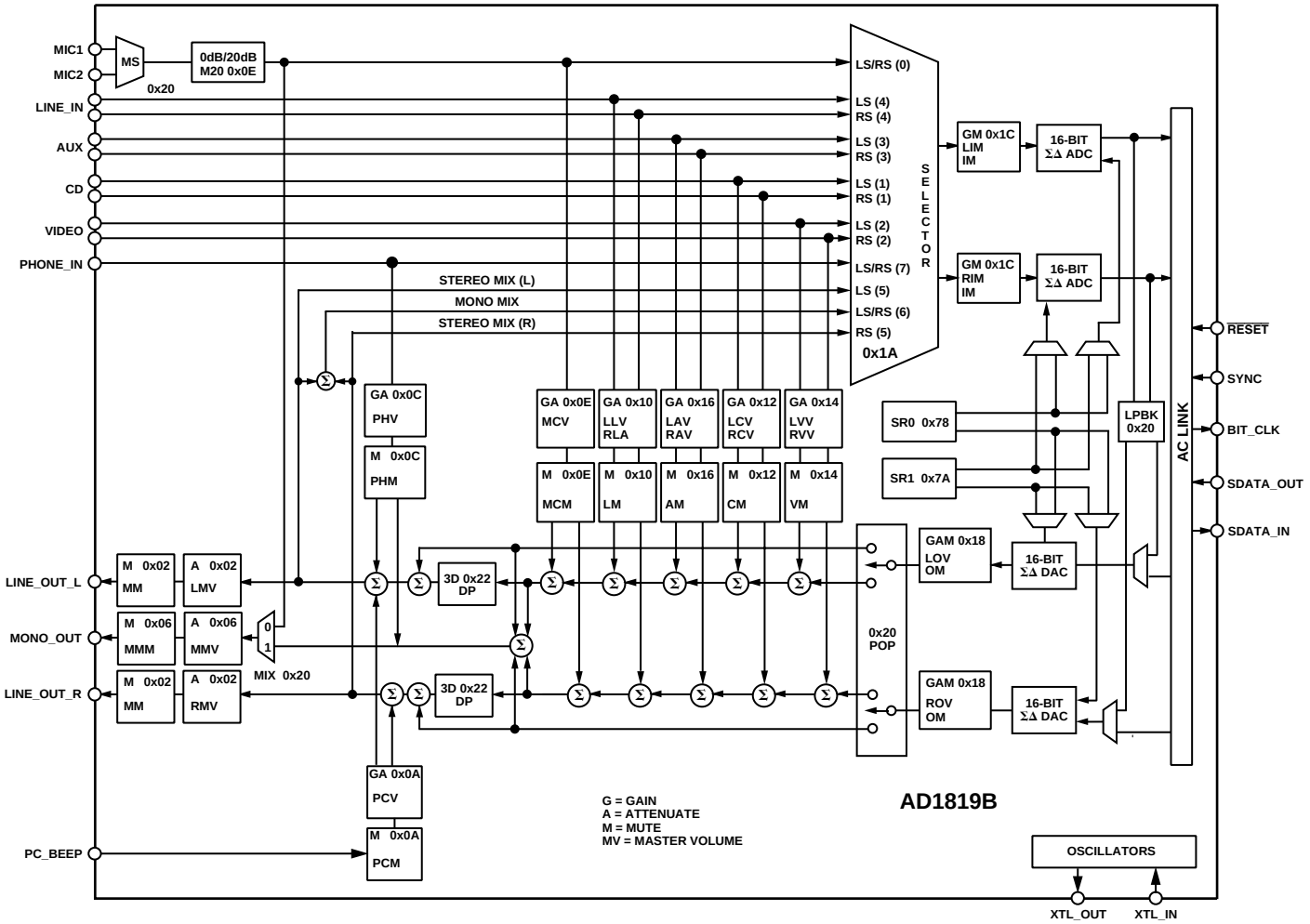

Figure 8. Block Diagram Register Map

Indexed Control Registers

Reg Num	Name	D15	D14	D13	D12	D11	D10	D9	D8	D7	D6	D5	D4	D3	D2	D1	D0	Default
00h	Reset	X	SE4	SE3	SE2	SE1	SE0	ID9	ID8	ID7	ID6	ID5	ID4	ID3	ID2	ID1	ID0	0400h
02h	Master Volume	MM	X	LMV5	LMV4	LMV3	LMV2	LMV1	LMV0	X	X	RMV5	RMV4	RMV3	RMV2	RMV1	RMV0	8000h
04h	Reserved	X	X	X	X	X	X	X	X	X	X	X	X	X	X	X	X	X
06h	Master Volume Mono	MMM	X	X	X	X	X	X	X	X	X	MMV5	MMV4	MMV2	MMV2	MMV1	MMV0	8000h
08h	Reserved	X	X	X	X	X	X	X	X	X	X	X	X	X	X	X	X	X
0Ah	PC Beep Volume	PCM	X	X	X	X	X	X	X	X	X	X	PCV3	PCV2	PCV1	PCV0	X	8000h
0Ch	Phone Volume	PHM	X	X	X	X	X	X	X	X	X	X	PHV4	PHV3	PHV2	PHV1	PHV0	8008h
0Eh	Mic Volume	MCM	X	X	X	X	X	X	X	X	M20	X	MCV4	MCV3	MCV2	MCV1	MCV0	8008h
10h	Line In Volume	LM	X	X	LLV4	LLV3	LLV2	LLV1	LLV0	X	X	X	RLV4	RLV3	RLV2	RLV1	RLV0	8808h
12h	CD Volume	CVM	X	X	LCV4	LCV3	LCV2	LCV1	LCV0	X	X	X	RCV4	RCV3	RCV2	RCV1	RCV0	8808h
14h	Video Volume	VM	X	X	LVV4	LVV3	LVV2	LVV1	LVV0	X	X	X	RVV4	RVV3	RVV2	RVV1	RVV0	8808h
16h	Aux Volume	AM	X	X	LAV4	LAV3	LAV2	LAV1	LAV0	X	X	X	RAV4	RAV3	RAV2	RAV1	RAV0	8808h
18h	PCM Out Vol	OM	X	X	LOV4	LOV3	LOV2	LOV1	LOV0	X	X	X	ROV4	ROV3	ROV2	ROV1	ROV0	8808h
1Ah	Record Select	X	X	X	X	X	LS2	LS1	LS0	X	X	X	X	X	RS2	RS1	RS0	0000h
1Ch	Record Gain	IM	X	X	X	LIM3	LIM2	LIM1	LIM0	X	X	X	X	RIM3	RIM2	RIM1	RIM0	8000h
1Eh	Reserved	X	X	X	X	X	X	X	X	X	X	X	X	X	X	X	X	X
20h	General Purpose	POP	X	3D	X	X	X	MIX	MS	LPBK	X	X	X	X	X	X	X	0000h
22h	3D Control	X	X	X	X	X	X	X	X	X	X	X	X	DP3	DP2	DP1	DP0	0000h
24h	Reserved	X	X	X	X	X	X	X	X	X	X	X	X	X	X	X	X	X
26h	Power-Down Contr/Stat	X	X	PR5	PR4	PR3	PR2	PR1	PR0	X	X	X	X	REF	ANL	DAC	ADC	0000h
28h	Reserved	X	X	X	X	X	X	X	X	X	X	X	X	X	X	X	X	X
72h	Reserved	X	X	X	X	X	X	X	X	X	X	X	X	X	X	X	X	X
74h	Serial Configuration	SLOT 16	REGM 2	REGM 1	REGM 0	DRQE N	DLRQ 2	DLRQ 1	DLRQ 0	X	X	X	X	X	DRRQ 2	DRRQ 1	DRRQ 0	7000h
76h	Misc Control Bits	DACZ	X	X	X	X	DLSR	X	ALSR	MOD EN	SRX1 0D7	SRX8 D7	X	X	DRSR	X	ARSR	0000h
78h	Sample Rate 0	SR015	SR014	SR013	SR012	SR011	SR010	SR09	SR08	SR07	SR06	SR05	SR04	SR03	SR02	SR01	SR00	BB80h
7Ah	Sample Rate 1	SR115	SR114	SR113	SR112	SR111	SR110	SR19	SR18	SR17	SR16	SR15	SR14	SR13	SR12	SR11	SR10	BB80h
7Ch	Vendor ID1	F7	F6	F5	F4	F3	F2	F1	F0	S7	S6	S5	S4	S3	S2	S1	S0	4144h
7Eh	Vendor ID2	T7	T6	T5	T4	T3	T2	T1	T0	REV7	REV6	REV5	REV4	REV3	REV2	REV1	REV0	5303h

NOTES
1. All registers not shown and bits containing an X are reserved.
2. Odd register addresses are aliased to the next lower even address.
3. Reserved registers should not be written.
4. Zeros should be written to reserved bits.

Reset (Index 00h)

Reg Num	Name	D15	D14	D13	D12	D11	D10	D9	D8	D7	D6	D5	D4	D3	D2	D1	D0	Default
00h	Reset	X	SE4	SE3	SE2	SE1	SE0	ID9	ID8	ID7	ID6	ID5	ID4	ID3	ID2	ID1	ID0	0400h

Note: Writing any value to this register performs a register reset, which cause all registers to revert to their default values (except 74h, which controls the serial configuration). Reading this register returns the ID code of the part and a code for the type of 3D Stereo Enhancement.

ID [9:0] Identify Capability. The ID field decodes the capabilities of AD1819B on the following:

Bit	Function	AD1819B*
ID0	Dedicated Mic PCM in Channel	0
ID1	Modem Line Codec Support	0
ID2	Bass and Treble Control	0
ID3	Simulated Stereo (Mono to Stereo)	0
ID4	Headphone Out Support	0
ID5	Loudness (Bass Boost) Support	0
ID6	18-Bit DAC Resolution	0
ID7	20-Bit DAC Resolution	0
ID8	18-Bit ADC Resolution	0
ID9	20-Bit ADC Resolution	0

*The AD1819B contains none of the optional features identified by these bits.

SE [4:0] Stereo Enhancement. The 3D stereo enhancement field identifies the Analog Devices 3D Phat Stereo enhancement.

Master Volume (Index 02h)

Reg Num	Name	D15	D14	D13	D12	D11	D10	D9	D8	D7	D6	D5	D4	D3	D2	D1	D0	Default
02h	Master Volume	MM	X	LMV5	LMV4	LMV3	LMV2	LMV1	LMV0	X	X	RMV5	RMV4	RMV3	RMV2	RMV1	RMV0	8000h

RMV [4:0] Right Master Volume Control. The least significant bit represents 1.5 dB. This register controls the output from 0 dB to a maximum attenuation of –46.5 dB.

RMV5 Right Master Volume Maximum Attenuation. Forces RMV [4:0] to all "1s," –46.5 dB.

LMV [4:0] Left Master Volume Control. The least significant bit represents 1.5 dB. This register controls the output from 0 dB to a maximum attenuation of –46.5 dB.

LMV5 Left Master Volume Maximum Attenuation. Forces LMV [4:0] to all "1s," –46.5 dB.

MM Master Volume Mute. When this bit is set to "1," the left and right channels are muted.

MM	xMV5 . . . xMV0	Function
0	00 0000	0 dB Attenuation
0	01 1111	–46.5 dB Attenuation
0	1x xxxx	–46.5 dB Attenuation
1	xx xxxx	∞ dB Attenuation

Master Volume Mono (Index 06h)

Reg Num	Name	D15	D14	D13	D12	D11	D10	D9	D8	D7	D6	D5	D4	D3	D2	D1	D0	Default
06h	Master Volume Mono	MMM	X	X	X	X	X	X	X	X	X	MMV5	MMV4	MMV3	MMV2	MMV1	MMV0	8000h

MMV [4:0] Mono Master Volume Control. The least significant bit represents 1.5 dB. This register controls the output from 0 dB to a maximum attenuation of –46.5 dB.

MMV5 Mono Master Volume Maximum Attenuation –46.5 dB.

MMM Mono Master Volume Mute. When this bit is set to "1," the mono channel is muted.

MMM	MMV5 . . . MMV0	Function
0	00 0000	0 dB Attenuation
0	01 1111	–46.5 dB Attenuation
0	1x xxxx	–46.5 dB Attenuation
1	xx xxxx	∞ dB Attenuation

PC Beep (Index 0Ah)

Reg Num	Name	D15	D14	D13	D12	D11	D10	D9	D8	D7	D6	D5	D4	D3	D2	D1	D0	Default
0Ah	PC Beep Volume	PCM	X	X	X	X	X	X	X	X	X	X	PCV3	PCV2	PCV1	PCV0	X	8000h

PCV [3:0] PC Beep Volume Control. The least significant bit represents 3 dB attenuation. This register controls the output from 0 dB to a maximum attenuation of –45 dB. The PC Beep is routed to the Left and Right Line outputs even when AD1819B is in a RESET State. This is so that Power-On Self Test (POST) codes can be heard by the user in case of a hardware problem with the PC.

PCM PC Beep Mute. When this bit is set to "1," the channel is muted.

PCM	PCV3 . . . PCV0	Function
0	0000	0 dB Attenuation
0	1111	–45 dB Attenuation
1	xxxx	–∞ dB Attenuation

Phone Volume (Index 0Ch)

Reg Num	Name	D15	D14	D13	D12	D11	D10	D9	D8	D7	D6	D5	D4	D3	D2	D1	D0	Default
0Ch	Phone Volume	PHM	X	X	X	X	X	X	X	X	X	X	PHV4	PHV3	PHV2	PHV1	PHV0	8008h

PHV [4:0] Phone Volume. Allows setting the Phone Volume Attenuator in 32 steps. The LSB represents 1.5 dB, and the range is +12 dB to –34.5 dB. The default value is 0 dB, mute enabled.

PHM Phone Mute. When this bit is set to "1," the channel is muted.

Mic Volume (Index 0Eh)

Reg Num	Name	D15	D14	D13	D12	D11	D10	D9	D8	D7	D6	D5	D4	D3	D2	D1	D0	Default
0Eh	Mic Volume	MCM	X	X	X	X	X	X	X	X	M20	X	MCV4	MCV3	MCV2	MCV1	MCV0	8008h

MCV [4:0] Mic Volume Gain. Allows setting the Mic Volume attenuator in 32 steps. The LSB represents 1.5 dB, and the range is +12 dB to –34.5 dB. The default value is 0 dB, mute enabled.

M20 Microphone +20 dB Gain Block
0 = Disabled; Gain = 0 dB.
1 = Enabled; Gain = +20 dB.

MCM Mic Mute. When this bit is set to "1," the channel is muted.

Line In Volume (Index 10h)

Reg Num	Name	D15	D14	D13	D12	D11	D10	D9	D8	D7	D6	D5	D4	D3	D2	D1	D0	Default
10h	LINE_IN Volume	LM	X	X	LLV4	LLV3	LLV2	LLV1	LLV0	X	X	X	RLV4	RLV3	RLV2	RLV1	RLV0	8808h

RLV [4:0] Right Line In Volume. Allows setting the Line In right channel attenuator in 32 steps. The LSB represents 1.5 dB, and the range is +12 dB to –34.5 dB. The default value is 0 dB, mute enabled.

LLV [4:0] Left Line In Volume. Allows setting the Line In left channel attenuator in 32 steps. The LSB represents 1.5 dB, and the range is +12 dB to –34.5 dB. The default value is 0 dB, mute enabled.

LM Line In Mute. When this bit is set to "1," the channel is muted.

CD Volume (Index 12h)

Reg Num	Name	D15	D14	D13	D12	D11	D10	D9	D8	D7	D6	D5	D4	D3	D2	D1	D0	Default
12h	CD Volume	CVM	X	X	LCV4	LCV3	LCV2	LCV1	LCV0	X	X	X	RCV4	RCV3	RCV2	RCV1	RCV0	8808h

RCV [4:0] Right CD Volume. Allows setting the CD right channel attenuator in 32 steps. The LSB represents 1.5 dB, and the range is +12 dB to –34.5 dB. The default value is 0 dB, mute enabled.

LCV [4:0] Left CD Volume. Allows setting the CD left channel attenuator in 32 steps. The LSB represents 1.5 dB, and the range is +12 dB to –34.5 dB. The default value is 0 dB, mute enabled.

CVM CD Volume Mute. When this bit is set to "1," the channel is muted.

Video Volume (Index 14h)

Reg Num	Name	D15	D14	D13	D12	D11	D10	D9	D8	D7	D6	D5	D4	D3	D2	D1	D0	Default
14h	Video Volume	VM	X	X	LVV4	LVV3	LVV2	LVV1	LVV0	X	X	X	RVV4	RVV3	RVV2	RVV1	RVV0	8808h

RVV [4:0] Right Video Volume. Allows setting the Video right channel attenuator in 32 steps. The LSB represents 1.5 dB, and the range is +12 dB to –34.5 dB. The default value is 0 dB, mute enabled.

LVV [4:0] Left Video Volume. Allows setting the Video left channel attenuator in 32 steps. The LSB represents 1.5 dB, and the range is +12 dB to –34.5 dB. The default value is 0 dB, mute enabled.

VM Video Mute. When this bit is set to "1," the channel is muted.

Aux Volume (Index 16h)

Reg Num	Name	D15	D14	D13	D12	D11	D10	D9	D8	D7	D6	D5	D4	D3	D2	D1	D0	Default
16h	Aux Volume	AM	X	X	LAV4	LAV3	LAV2	LAV1	LAV0	X	X	X	RAV4	RAV3	RAV2	RAV1	RAV0	8808h

RAV [4:0] Right Aux Volume. Allows setting the Aux right channel attenuator in 32 steps. The LSB represents 1.5 dB, and the range is +12 dB to –34.5 dB. The default value is 0 dB, mute enabled.

LAV [4:0] Left Aux Volume. Allows setting the Aux left channel attenuator in 32 steps. The LSB represents 1.5 dB, and the range is +12 dB to –34.5 dB. The default value is 0 dB, mute enabled.

AM Aux Mute. When this bit is set to "1," the channel is muted.

PCM Out Volume (Index 18h)

Reg Num	Name	D15	D14	D13	D12	D11	D10	D9	D8	D7	D6	D5	D4	D3	D2	D1	D0	Default
18h	PCM Out Volume	OM	X	X	LOV4	LOV3	LOV2	LOV1	LOV0	X	X	X	ROV4	ROV3	ROV2	ROV1	ROV0	8808h

ROV [4:0] Right PCM Out Volume. Allows setting the PCM right channel attenuator in 32 steps. The LSB represents 1.5 dB, and the range is +12 dB to –34.5 dB. The default value is 0 dB, mute enabled.

LOV [4:0] Left PCM Out Volume. Allows setting the PCM left channel attenuator in 32 steps. The LSB represents 1.5 dB, and the range is +12 dB to –34.5 dB. The default value is 0 dB, mute enabled.

OM PCM Out Volume Mute. When this bit is set to "1," the channel is muted.

Volume Table (Index 0Ch to 18h)

Mute	x4 . . . x0	Function
0	00000	+12 dB Gain
0	01000	0 dB Gain
0	11111	–34.5 dB Gain
1	xxxxx	–∞ dB Gain

Record Select Control (Index 1Ah)

Reg Num	Name	D15	D14	D13	D12	D11	D10	D9	D8	D7	D6	D5	D4	D3	D2	D1	D0	Default
1Ah	Record Select	X	X	X	X	X	LS2	LS1	LS0	X	X	X	X	X	RS2	RS1	RS0	0000h

RS [2:0] Right Record Select.

LS [2:0] Left Record Select.

Used to select the record source independently for right and left. See table for legend.

The default value is 0000h, which corresponds to Mic in.

RS2 . . . RS0	Right Record Source
0	MIC
1	CD_R
2	VIDEO_R
3	AUX_R
4	LINE_IN_R
5	Stereo Mix (R)
6	Mono Mix
7	PHONE_IN

LS2 . . . LS0	Left Record Source
0	MIC
1	CD_L
2	VIDEO_L
3	AUX_L
4	LINE_IN_L
5	Stereo Mix (L)
6	Mono Mix
7	PHONE_IN

Record Gain (Index 1Ch)

Reg Num	Name	D15	D14	D13	D12	D11	D10	D9	D8	D7	D6	D5	D4	D3	D2	D1	D0	Default
1Ch	Record Gain	IM	X	X	X	LIM3	LIM2	LIM1	LIM0	X	X	X	X	RIM3	RIM2	RIM1	RIM0	8000h

RIM [3:0] Right Input Mixer Gain Control. Each LSB represents 1.5 dB, 0000 = 0 dB and the range is 0 dB to +22.5 dB.

LIM [3:0] Left Input Mixer Gain Control. Each LSB represents 1.5 dB, 0000 = 0 dB and the range is 0 dB to +22.5 dB.

IM Input Mute. 0 = Unmuted, 1 = Muted or –∞ dB gain.

IM	xIM3 . . . xIM0	Function
0	1111	+22.5 dB Gain
0	0000	0 dB Gain
1	xxxxx	–∞ dB Gain

General Purpose (Index 20h)

Reg Num	Name	D15	D14	D13	D12	D11	D10	D9	D8	D7	D6	D5	D4	D3	D2	D1	D0	Default
20h	General Purpose	POP	X	3D	X	X	X	MIX	MS	LPBK	X	X	X	X	X	X	X	0000h

LPBK Loopback Control. ADC/DAC digital loopback mode.

MS MIC Select.
0 = MIC1.
1 = MIC2.

MIX — Mono Output Select.
0 = Mix.
1 = Mic.

3D — Phat Stereo Enhancement.
0 = Phat Stereo is off.
1 = Phat Stereo is on.

POP — PCM Output Path. The POP bit controls the optional PCM out 3D bypass path (the pre- and post-3D PCM outpaths are mutually exclusive).
0 = Pre-3D.
1 = Post-3D.

The register should be read before writing to generate a mask for only the bit(s) that need to be changed. The default value is 0000h.

3D Control (Index 22h)

Reg Num	Name	D15	D14	D13	D12	D11	D10	D9	D8	D7	D6	D5	D4	D3	D2	D1	D0	Default
22h*	3D Control	X	X	X	X	X	X	X	X	X	X	X	X	DP3	DP2	DP1	DP0	0000h

DP [2:0] — Depth Control. Sets 3D "Depth" Phat Stereo enhancement according to table below.

DP3 . . . DP0	Depth
0	0%
1	6.67%
14	93.33%
15	100%

Power-Down Control/Status (Index 26h)

Reg Num	Name	D15	D14	D13	D12	D11	D10	D9	D8	D7	D6	D5	D4	D3	D2	D1	D0	Default
26h	Power-Down Cntrl/Stat	X	X	PR5	PR4	PR3	PR2	PR1	PR0	X	X	X	X	REF	ANL	DAC	ADC	0000h

Ready Bits: The ready bits are read only, writing to REF, ANL, DAC, ADC will have no effect. These bits indicate the status for the AD1819B subsections. If the bit is a one then that subsection is "ready." Ready is defined as the subsection able to perform in its nominal state.

ADC — ADC section ready to transmit data.

DAC — DAC section ready to accept data.

ANL — Analog gainuators, attenuators, and mixers ready.

REF — Voltage References, V_{REF} and V_{REFOUT} up to nominal level.

PR [5:0] — Power-Down Bits. Bits 0 and 1 are to be used individually rather than in combination with each other. The last bit PR3 can be used in combination with PR2 or by itself.

Power-Down State	Set Bits
ADCs and Input Mux Power-Down	PR0
DACs Power-Down	PR1
Analog Mixer Power-Down (V_{REF} and V_{REFOUT} On)	PR1, PR2
Analog Mixer Power-Down (V_{REF} and V_{REFOUT} Off)	PR0, PR1, PR3
AC-Link Interface Power-Down	PR4
Internal Clocks Disabled	PR0, PR1, PR4, PR5
ADC and DAC Power-Down	PR0, PR1
V_{REF} Standby Mode	PR0, PR1, PR2, PR4, PR5
Total Power-Down	PR0, PR1, PR2, PR3, PR4, PR5

Serial Configuration (Index 74h)

Reg Num	Name	D15	D14	D13	D12	D11	D10	D9	D8	D7	D6	D5	D4	D3	D2	D1	D0	Default
74h	Serial Configuration	SLOT 16	REGM 2	REGM 1	REGM 0	DRQE N	DLRQ 2	DLRQ 1	DLRQ 0	X	X	X	X	X	DRRQ 2	DRRQ 1	DRRQ 0	7000h

DRRQ0 Master AC'97 Codec DAC Right Request.

DRRQ1 Slave 1 Codec DAC Right Request.

DRRQ2 Slave 2 Codec DAC Right Request.

DLRQ0 Master AC'97 Codec DAC Left Request.

DLRQ1 Slave 1 Codec DAC Left Request.

DLRQ2 Slave 2 Codec DAC Left Request.

DRQEN Fills idle status slots with DAC request reads, and stuffs DAC requests into LSB of output address slot. (AC-Link Slot 1.)

REGM0 Master Codec Register Mask.

REGM1 Slave 1 Codec Register Mask.

REGM2 Slave 2 Codec Register Mask.

SLOT16 Enable 16-Bit Slots.

If your system uses only a single AD1819B, you can ignore the register mask and the slave 1/slave 2 request bits. If you write to this register, write ones to all of the register mask bits. The request bits are read-only.

The codec asserts each request bit when the corresponding DAC channel can accept data in the next frame. These bits are snapshots of the codec state taken when the current frame began (effectively, on the rising edge of SYNC), but they also take notice of DAC samples sent in the current frame.

If you set the DRQEN bit, the AD1819B will fill all otherwise unused AC-Link status address and data slots with the contents of register 74h. That makes it somewhat simpler to access the information, because you don't need to continually issue AC-Link read commands to get the register contents.

Also, the DAC requests are reflected in Slot 1, Bits (11 . . . 6). These bits are active Lo.

SLOT16 makes all AC-Link slots 16 bits in length, formatted into 16 slots.

Miscellaneous Control Bits (Index 76h)

Reg Num	Name	D15	D14	D13	D12	D11	D10	D9	D8	D7	D6	D5	D4	D3	D2	D1	D0	Default
76h	Misc Control Bits	DACZ	X	X	X	X	DLSR	X	ALSR	MOD EN	SRX10 D7	SRX8 D7	X	X	DRSR	X	ARSR	0000h

ARSR ADC Right Sample Generator Select. Connects right ADC channel to SR0 or SR1.
0 = SR0 Selected.
1 = SR1 Selected.

DRSR DAC Right Sample Generator Select. Connects right DAC channel to SR0 or SR1.
0 = SR0 Selected.
1 = SR1 Selected.

SRX8D7 Multiply SR1 Rate by 8/7.

SRX10D7 Multiply SR1 Rate by 10/7. SRX10D7 and SRX8D7 are mutually exclusive; SRX10D7 has priority if both are set.

MODEN Modem Filter Enable (left channel only). Change only when DACs are powered down.

ALSR ADC Left Sample Generator Select. Connects left ADC channel to SR0 or SR1.
0 = SR0 Selected.
1 = SR1 Selected.

DLSR DAC Left Sample Generator Select. Connects left DAC channel to SR0 or SR1.
0 = SR0 Selected.
1 = SR1 Selected.

DACZ Zero-Fill (vs. repeat sample) if DAC is starved.

Sample Rate 0 (Index 78h)

Reg Num	Name	D15	D14	D13	D12	D11	D10	D9	D8	D7	D6	D5	D4	D3	D2	D1	D0	Default
78h	Sample Rate 0	SR015	SR014	SR013	SR012	SR011	SR010	SR09	SR08	SR07	SR06	SR05	SR04	SR03	SR02	SR01	SR00	BB80h

SR0 [15:0] Writing to this register allows the user to program the sampling frequency from 7 kHz (1B58h) to 48 kHz (BB80h) in 1 Hz increments. Programming a value greater than 48 kHz or less than 7 kHz may cause unpredictable results.

Sample Rate 1 (Index 7Ah)

Reg Num	Name	D15	D14	D13	D12	D11	D10	D9	D8	D7	D6	D5	D4	D3	D2	D1	D0	Default
7Ah	Sample Rate 1	SR115	SR114	SR113	SR112	SR111	SR110	SR19	SR18	SR17	SR16	SR15	SR14	SR13	SR12	SR11	SR10	BB80h

SR1 [15:0] Writing to this register allows the user to program the sampling frequency from 7 kHz (1B58h) to 48 kHz (BB80h) in 1 Hz increments. The sample rate may be multiplied by 8/7 or 10/7 by setting Bits D6 and D5 in Register 76h.

Vendor ID (Index 7Ch–7Eh)

Reg Num	Name	D15	D14	D13	D12	D11	D10	D9	D8	D7	D6	D5	D4	D3	D2	D1	D0	Default
7Ch	Vendor ID1	F7	F6	F5	F4	F3	F2	F1	F0	S7	S6	S5	S4	S3	S2	S1	S0	4144h

S [7:0] This register is ASCII encoded to “A.”

F [7:0] This register is ASCII encoded to “D.”

Reg Num	Name	D15	D14	D13	D12	D11	D10	D9	D8	D7	D6	D5	D4	D3	D2	D1	D0	Default
7Eh	Vendor ID2	T7	T6	T5	T4	T3	T2	T1	T0	REV7	REV6	REV5	REV4	REV3	REV2	REV1	REV0	5303h

T [7:0] This register is ASCII encoded to “S.”

REV [7:0] Revision Register field contains the revision number.

These bits are read-only and should be verified before accessing vendor-defined features.

DIGITAL INTERFACE

AD1819B AC-Link Digital Serial Interface Protocol

The AD1819B incorporates an AC'97 5-pin digital serial interface that links it to a digital controller. AC-Link is a bidirectional, fixed rate, serial PCM digital stream. It handles multiple input, and output audio streams, as well as control register accesses employing a time division multiplexed (TDM) scheme. The AC-Link architecture divides each audio frame into 12 outgoing and 12 incoming data streams, up to 20-bit sample resolution. The AD1819B uses 16-bit samples. The data streams include:

AC ’97 Protocol

- **TAG** — **1 Input and Output**
- **Control** — **2 Output Slots**
  Control Register Write Port
- **Status** — **2 Input Slots**
  Control Register Read Port
- **PCM Playback** — **2 Output Slots**
  2-Channel Composite PCM Output Stream
- **PCM Record Data** — **2 Input Slots**
  2-Channel Composite PCM Input Stream

Synchronization of all AC-Link data transactions is signaled by the AC’97 controller. The AD1819B drives the serial bit clock onto AC-Link, which the AC’97 controller then qualifies with a synchronization signal to construct audio frames.

SYNC, which is fixed at 48 kHz, is derived by dividing down the serial bit clock (BIT_CLK) by 256. The BIT_CLK is fixed at 12.288 MHz. AC-Link serial data is updated on each rising edge of BIT_CLK. The receiver of AC-Link data, the AD1819B for outgoing data and the AC’97 controller for incoming data, samples each serial bit on the falling edge of BIT_CLK. SYNC must remain high for a minimum of 1 BIT_CLK up to a maximum duration of 16 BIT_CLKs at the beginning of each audio frame. The first 16 bits of the audio frame is defined as the “Tag Phase.” The remainder of the audio frame is the “Data Phase.” The AD1819B uses SYNC to define the beginning of the audio frame.

The AC-Link protocol provides for a special 16-bit time slot (Slot 0) wherein each bit conveys a valid tag for its corresponding time slot within the current audio frame. A "1" in a given bit position of Slot 0 indicates that the corresponding time slot within the current audio frame has been assigned to a data stream, and contains valid data. If a slot is "tagged" invalid, it is the responsibility of the source of the data, (AD1819B for the input stream, AC'97 controller for the output stream), to stuff all bit positions with 0s during that slot's active time. The AD1819B stuffs all invalid slots with zeros and ignores invalid input slots.

Additionally, for power savings, all clock, sync, and data signals can be halted.

For multiple codec operations, the AD1819B supports an enhanced mode for communicating with up to two additional codecs. The Slave 1 AD1819B codec uses Slots 5 and 6, while Slave 2 uses Slots 7 and 8 as shown in the following diagram.

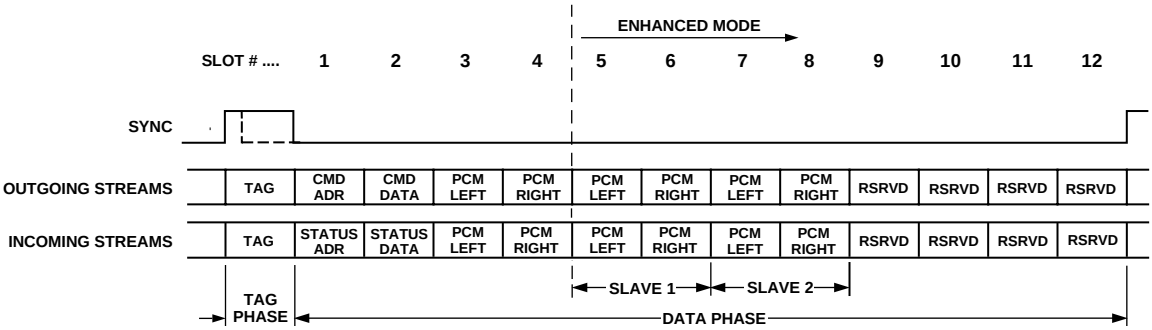

Figure 9. Standard Bidirectional Audio Frame

AC-Link Audio Output Frame (SDATA_OUT)

The audio output frame data streams correspond to the multiplexed bundles of all digital output data targeting AD1819B's DAC inputs and control registers. As briefly mentioned earlier, each audio output frame supports up to twelve 20-bit outgoing data time slots. Slot 0 is a special reserved time slot containing 16 bits that are used for AC-Link protocol infrastructure.

Within Slot 0 the first bit is a global bit (SDATA_OUT Slot 0, Bit 15), which flags the validity for the entire audio frame. If the "Valid Frame" bit is a 1, this indicates that the current audio frame contains at least one slot time of valid data. The next 12-bit positions sampled by AC'97 indicate which of the corresponding 12 time slots contain valid data. In this way input DAC data streams of differing sample rates can be transmitted across the AC-Link at its fixed 48 kHz audio frame rate. The following diagram illustrates the time-slot-based AC-Link protocol.

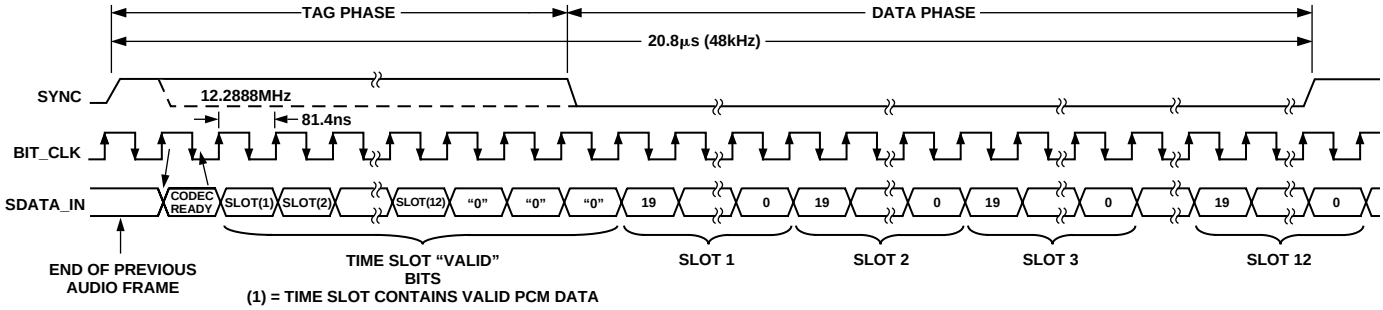

Figure 10. AC-Link Audio Output Frame

A new audio output frame begins with a low-to-high transition of SYNC. SYNC is synchronous to the rising edge of BIT_CLK. On the immediately following falling edge of BIT_CLK, the AD1819B samples the assertion of SYNC. This falling edge marks the time when both sides of AC-Link are aware of the start of a new audio frame. On the next rising edge of BIT_CLK, the AC'97 controller transitions SDATA_OUT into the first bit position of Slot 0 (Valid Frame Bit). Each new bit position is presented to AC-Link on a rising edge of BIT_CLK, and subsequently sampled by AD1819B on the following falling edge of BIT_CLK. This sequence ensures that data transitions, and subsequent sample points for both incoming and outgoing data streams are time aligned.

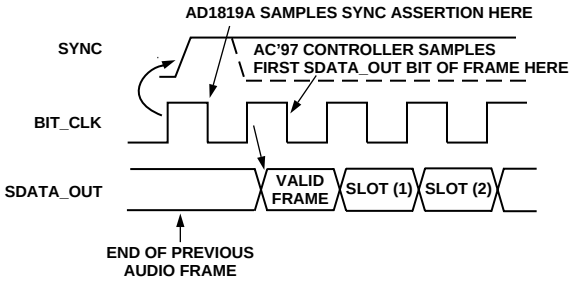

Figure 11. Start of an Audio Output Frame

SDATA_OUT's composite stream is MSB justified (MSB first) with all nonvalid slots' bit positions stuffed with 0s by the AC'97 controller. The AD1819B ignores invalid slots.

In the event that there are less than 20 valid bits within an assigned and valid time slot, the AC'97 controller always stuffs all trailing nonvalid bit positions of the 20-bit slot with 0s. The AD1819B ignores unused bits.

As an example, consider an 8-bit sample stream being played out to one of the AD1819B's DACs. The first 8-bit positions are presented to the DAC (MSB justified), followed by the next 12 bit positions, which are stuffed with 0s by the AC'97 controller.

When mono audio sample streams are output from the AC'97 controller, it is necessary that BOTH left and right stream time slots be filled with the same data.

Slot 1: Command Address Port

The command port is used to control features and request status (see Audio Input Frame Slots l and 2) for AD1819B functions including, but not limited to, mixer settings and power management (refer to the control register section of this specification).

The control interface architecture supports up to sixty-four 16-bit read/write registers, addressable on even byte boundaries. Only the even registers (00h, 02h, etc.) are valid, odd register (01h, 03h, etc.) accesses are discouraged (defaulting to the preceding even byte boundary—i.e., a read to 01h will return the 16-bit contents of 00h). Note that shadowing of the control register file on the AC'97 controller is an option left open to the implementation of the AC'97 controller. The AD1819B's control register file is readable as well as writable.

Audio output frame Slot 1 communicates control register address, and write/read command information to AD1819B.

Command Address Port Bit Assignments:

Bit (19)	Read/Write Command	(1 = Read, 0 = Write)
Bit (18:12)	Control Register Index	(64 16-Bit Locations, Addressed On Even Byte Boundaries)
Bit (11:0)	Reserved	(Stuffed with 0s)

The first bit (MSB) sampled by the AD1819B indicates whether the current control transaction is a read or a write operation. The following 7-bit positions communicate the targeted control register address. The trailing 12-bit positions within the slot are reserved.

Slot 2: Command Data Port

The command data port is used to deliver 16-bit control register write data in the event that the current command port operation is a write cycle (as indicated by Slot 1, Bit 19).

Bit (19:4)	Control Register Write Data	(Stuffed with 0s If Current Operation Is Not a Write)
Bit (3:0)	Reserved	(Stuffed with 0s)

If the current command port operation is not a write, the entire slot time should be stuffed with 0s by the AC'97 controller.

Slot 3: PCM Playback Left Channel

Audio output frame Slot 3 is the composite digital audio left playback stream. In a typical "Games Compatible" PC this slot is composed of standard PCM (.wav) output samples digitally mixed (on the AC'97 controller or host processor) with music synthesis output samples. If a sample stream of resolution less than 20 bits is transferred, the AC'97 controller should stuff all trailing nonvalid bit positions within this time slot with 0s.

Slot 4: PCM Playback Right Channel

Audio output frame Slot 4 is the composite digital audio right playback stream. In a typical "Games Compatible" PC this slot is composed of standard PCM (.wav) output samples digitally mixed (on the AC'97 controller or host processor) with music synthesis output samples. If a sample stream of resolution less than 20 bits is transferred, the AC'97 controller should stuff all trailing nonvalid bit positions within this time slot with 0s.

Slot 5–Slot 8: Multicodec Communication

- Slot 5 Slave 1 PCM Playback Left Channel
- Slot 6 Slave 1 PCM Playback Right Channel
- Slot 7 Slave 2 PCM Playback Left Channel
- Slot 8 Slave 2 PCM Playback Right Channel

Slot 6–Slot 12: Reserved

Audio output frame Slot 6 to Slot 12 are reserved for future use and should always be stuffed with 0s by the digital controller.

AC-Link Audio Input Frame (SDATA_IN)

The audio input frame data streams correspond to the multiplexed bundles of all digital input data targeting the AC'97 controller. As is the case for audio output frame, each AC-Link audio input frame consists of twelve 20-bit time slots. Slot 0 is a special reserved time slot containing 16 bits used for AC-Link protocol infrastructure.

Within Slot 0 the first bit is a global bit (SDATA_IN Slot 0, Bit 15) which flags whether or not AD1819B is in the "Codec Ready" state. If the "Codec Ready" bit is a 0, this indicates that AD1819B is not ready for normal operation. This condition is normal following the deassertion of power-on reset, for example, while AD1819B's voltage references settle. When the AC-Link "Codec Ready" indicator bit is a 1, it indicates that the AC-Link and AD1819B control and status registers are in a fully operational state and all subsections are ready.

Prior to any attempts at putting AD1819B into operation the AC'97 controller should poll the first bit in the audio input frame (SDATA_IN Slot 0, Bit 15) for an indication that the AD1819B has asserted "Codec Ready." Once the AD1819B is sampled, "Codec Ready" is asserted the next 12-bit positions sampled by the AC'97 controller indicate which of the corresponding 12 time slots are assigned to input data streams and that they contain valid data. The following diagram illustrates the time-slot-based AC-Link protocol.

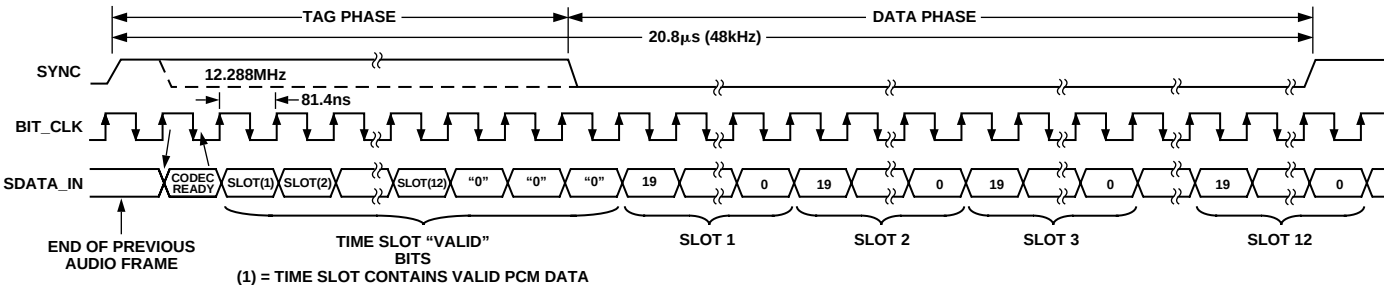

Figure 12. AC-Link Audio Input Frame

A new audio input frame begins with a low-to-high transition of SYNC. SYNC is synchronous to the rising edge of BIT_CLK. On the immediately following falling edge of BIT_CLK, the AD1819B samples the assertion of SYNC. This falling edge marks the time when both sides of AC-Link are aware of the start of a new audio frame. On the next rising of BIT_CLK, the AD1819B transitions SDATA_IN into the first bit position of Slot 0 ("Codec Ready" bit). Each new bit position is presented to AC-Link on a rising edge of BIT_CLK, and subsequently sampled by the AC'97 controller on the following falling edge of BIT_CLK. This sequence ensures that data transitions, and subsequent sample points for both incoming and outgoing data streams, are time aligned.

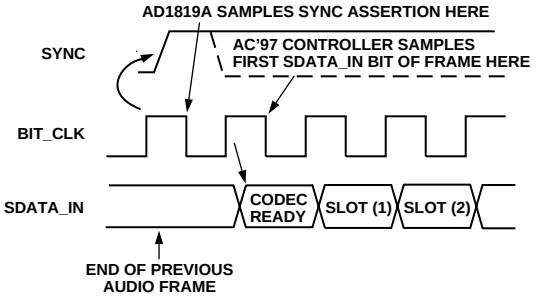

Figure 13. Start of an Audio Input Frame

SDATA_IN's composite stream is MSB justified (MSB first) with all nonvalid bit positions (for assigned and/or unassigned time slots) stuffed with 0s by AD1819B.

Slot 0: Tag Phase SDATA_IN

The AD1819B is capable of sampling data from 7 kHz to 48 kHz with a resolution of 1 kHz. To enable a sample rate other than the default 48 kHz, set the DRQEN bit (Register 74h Bit 11). This allows DAC request bits (these are low active) to be output on the SDATA_IN stream. The digital controller should monitor the ADC valid bits to determine when the codec has valid data ready to send.

TAG Phase Bit Assignments:

Bit (15)	Codec Ready
Bit (14)	Slot 1 Valid
Bit (13)	Slot 2 Valid
Bit (12)	Slot 3 Valid/ADC Left Data Is Valid on Slot 3
Bit (11)	Slot 4 Valid/ADC Right Data Is Valid on Slot 4
Bit (10)	Slot 5 Valid/ADC Left Data Slave 1 Valid on Slot 5
Bit (9)	Slot 6 Valid/ADC Right Data Slave 1 Valid on Slot 6
Bit (8)	Slot 7 Valid/ADC Left Data Slave 2 Valid on Slot 7
Bit (7)	Slot 8 Valid/ADC Right Data Slave 2 Valid on Slot 8
Bit (6:0)	Not Used

Slot 1: Status Address Port

The status port is used to monitor status for AD1819B functions including, but not limited to, mixer settings and power management.

Audio input frame Slot 1's stream echoes the control register index, for historical reference, for the data to be returned in Slot 2 (assuming that Slots 1 and 2 had been tagged "valid" by the AD1819B during Slot 0).

Status Address Port Bit Assignments:

Bit (19)	RESERVED	(Stuffed with 0)
Bit (18:12)	Control Register Index	(Echo of Register Index for Which Data Is Being Returned)
Bit (11)	DAC Request Slot 3	(0 = Request, 1 = No Request)
Bit (10)	DAC Request Slot 4	(0 = Request, 1 = No Request)
Bit (9)	DAC Request Slot 5	(0 = Request, 1 = No Request); Slave 1
Bit (8)	DAC Request Slot 6	(0 = Request, 1 = No Request); Slave 1
Bit (7)	DAC Request Slot 7	(0 = Request, 1 = No Request); Slave 2
Bit (6)	DAC Request Slot 8	(0 = Request, 1 = No Request); Slave 2
Bit (5:0)	RESERVED	(Stuffed with 0s)

The first bit (MSB) generated by the AD1819B is always stuffed with a 0. The following 7-bit positions communicate the associated control register address, and the trailing 12-bit positions are stuffed with 0s by the AD1819B.

Slot 2: Status Data Port

The status data port delivers 16-bit control register read data.

Bit (19:4)	Control Register Read Data	(Stuffed with 0s If Tagged "Invalid" by AD1819B)
Bit (3:0)	RESERVED	(Stuffed with 0s)

If Slot 2 is tagged "invalid" by the AD1819B, the entire slot will be stuffed with 0s by the AD1819B.

Slot 3: PCM Record Left Channel

Audio input frame Slot 3 is the left channel output of the AD1819B's input MUX, post-ADC.

AD1819B transmits its ADC output data (MSB first), and stuffs the trailing nonvalid bit positions with 0s to fill out its 20-bit time slot.

Slot 4: PCM Record Right Channel

Audio input frame Slot 4 is the right channel output of the AD1819B's input MUX, post-ADC.

AD1819B transmits its ADC output data (MSB first), and stuffs the trailing nonvalid bit positions with 0s to fill out its 20-bit time slot.

Slot 5–Slot 8: Multicodec Communication

- Slot 5 Slave 1 PCM Record Left Channel
- Slot 6 Slave 1 PCM Record Right Channel
- Slot 7 Slave 2 PCM Record Left Channel
- Slot 8 Slave 2 PCM Record Right Channel

Slot 9–Slot 12: Reserved

Audio input frame Slots 9–12 are reserved for future use and are always stuffed with 0s by the AD1819B.

AC-Link Low Power Mode

The AC-Link signals can be placed in a low power mode. When the AD1819B's Power-Down Register (26h) is programmed to the appropriate value, both BIT_CLK and SDATA_IN will be brought to a logic low voltage level.

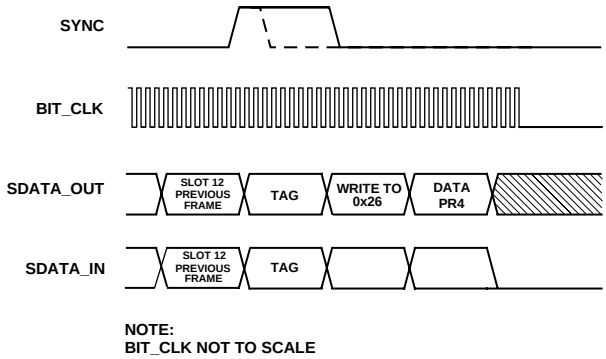

Figure 14. AC-Link Power-Down Timing

BIT_CLK and SDATA_IN are transitioned low immediately following the decode of the write to the Power-Down Register (26h) with PR4. When the AC'97 controller driver is at the point where it is ready to program the AC-Link into its low power mode, Slots (1 and 2) must be the only valid stream in the audio output frame.

The AC'97 controller should also drive SYNC and SDATA_OUT low after programming AD1819B to this low power "halted" mode.

Once AD1819B has been instructed to halt BIT_CLK, a special "wake-up" protocol must be used to bring the AC-Link to the active mode, since normal audio output and input frames can not be communicated in the absence of BIT_CLK.

Waking up the AC-Link

There are two methods for bringing the AC-Link out of a low power, halted mode. Regardless of the method, it is the AC'97 controller that performs the wake-up task.

AC-Link protocol provides for a "Cold AC'97 Reset," and a "Warm AC'97 Reset." The current power-down state would ultimately dictate which form of AC'97 reset is appropriate. Unless a "cold" or "register" reset (a write to the Reset Register) is performed, wherein the AD1819B registers are initialized to their default values, registers are required to keep state during all power-down modes. The Serial Configuration Register (0x74) maintains state during a register reset.

Once powered down, reactivation of the AC-Link via reassertion of the SYNC signal may be immediate. When the AD1819B powers up, it indicates readiness via the Codec Ready Bit (Input Slot 0, Bit 15).

Cold AC'97 Reset

A cold reset is achieved by asserting $\overline{\text{RESET}}$ for at least the minimum specified time. SYNC and SDATA_IN should be held low during the rising edge of $\overline{\text{RESET}}$. By driving $\overline{\text{RESET}}$, BIT_CLK and SDATA_IN will be activated, and all AD1819B control registers will be initialized to their default power-on reset values.

$\overline{\text{RESET}}$ is an asynchronous AD1819B input.

Warm AC'97 Reset

A warm AC'97 reset will reactivate the AC-Link without altering the current AD1819B register values. A warm reset is signaled by driving SYNC high for a minimum of 1 µs in the absence of BIT_CLK.

Within normal audio frames SYNC is a synchronous AD1819B input. In the absence of BIT_CLK, however, SYNC is treated as an asynchronous input used in the generation of a warm reset to the AD1819B.

MULTIPLE CODE CONFIGURATION

Setting Up Multiple Codecs

The AD1819B may be used with up to two additional AD1819 or AD1819B codecs. In order to configure the codecs as Master, Slave 1 or Slave 2, refer to the following table.

CS1	CS0	Configuration
0	0	Slave 1 Codec
0	1	Slave 2 Codec
1	0	Master Codec
1	1	AC'97 Mode Codec

0 = Ground; 1 = V_{DD}.

The XTAL_IN pin on the Slave Codecs "must" be tied to ground and the CHAIN_IN pin "must" be tied to ground on the last codec Slave 1 (on a 2-codec design) or Slave 2 (on a 3-codec design). See Figures 15, 16 and 17.

Configure the Codec Resources

Programing REGM (2:0) bits in the Serial Configuration Register (74h) allows the digital controller read write access to all the internal registers on each codec according to the following table.

REGM2	REGM1	REGM0	Read	Write
0	0	0	x	x
0	0	1	Master	Master
0	1	0	Slave 1	Slave 1
0	1	1	Master	Master, Slave 1
1	0	0	Slave 2	Slave 2
1	0	1	Master	Master, Slave 2
1	1	0	Slave 1	Slave 1, Slave 2
1	1	1	Master	Master, Slave 1, Slave 2

APPLICATIONS CIRCUITS

The AD1819B has been designed to require a minimum amount of external circuitry. The recommended applications circuits are shown in Figures 15–18. Reference designs for the AD1819B are available and may be obtained by contacting your local Analog Devices' sales representative or authorized distributor. Example shell programs for establishing a communications path between the AD1819B and an ADSP-21xx DSP are also available.

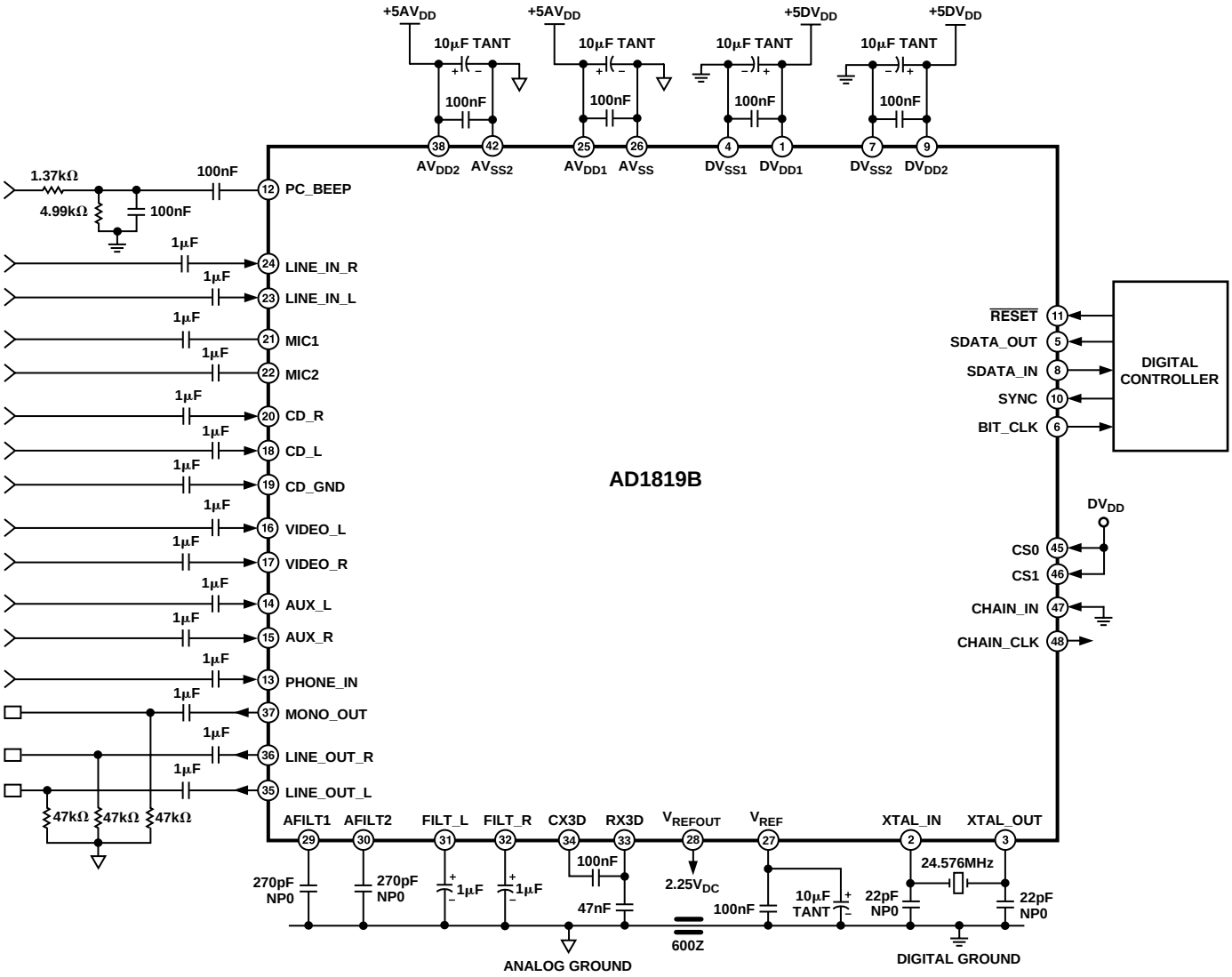

Figure 15. Recommended One Codec Application Circuit

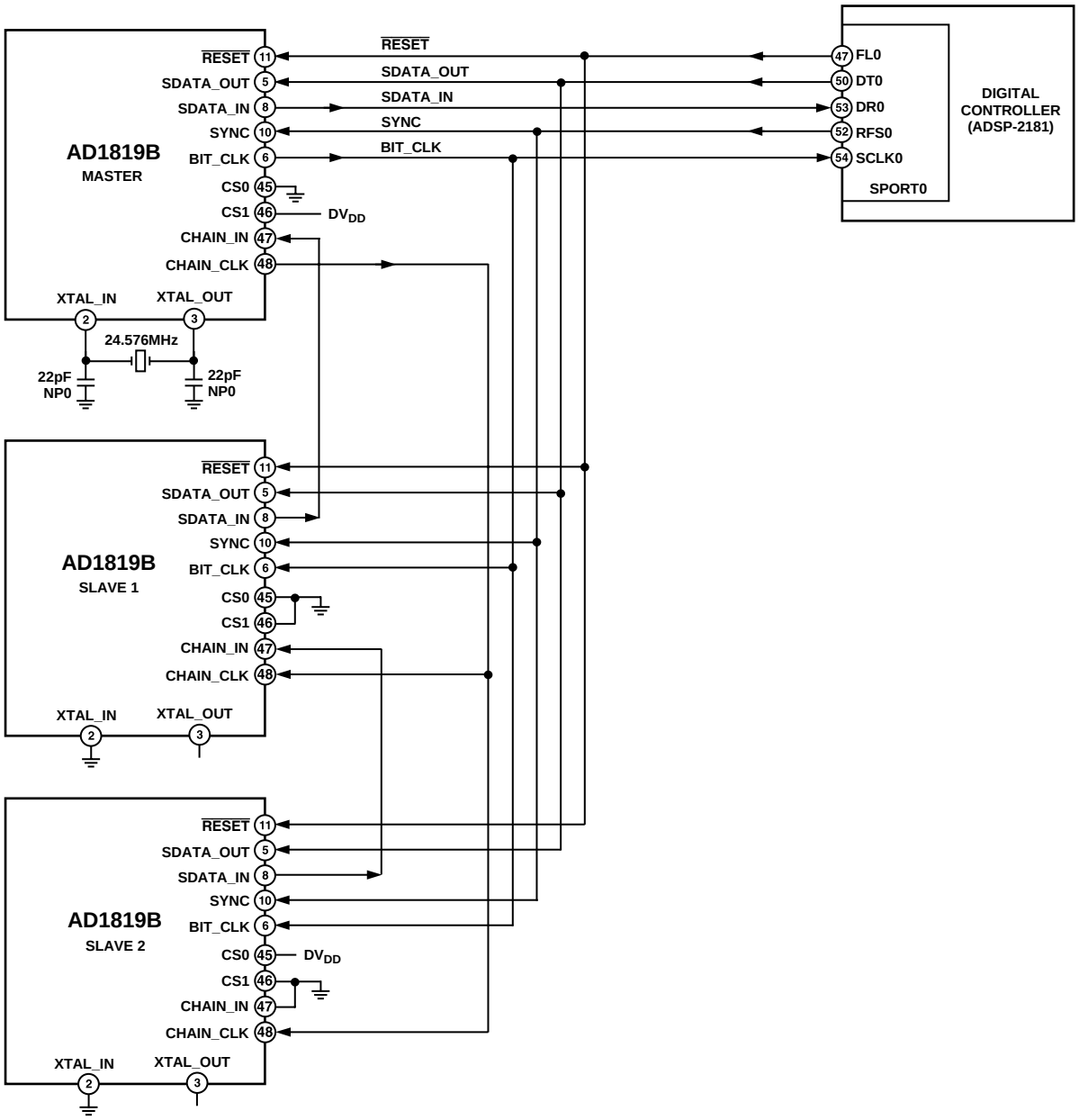

Figure 16. Three Codec System Example

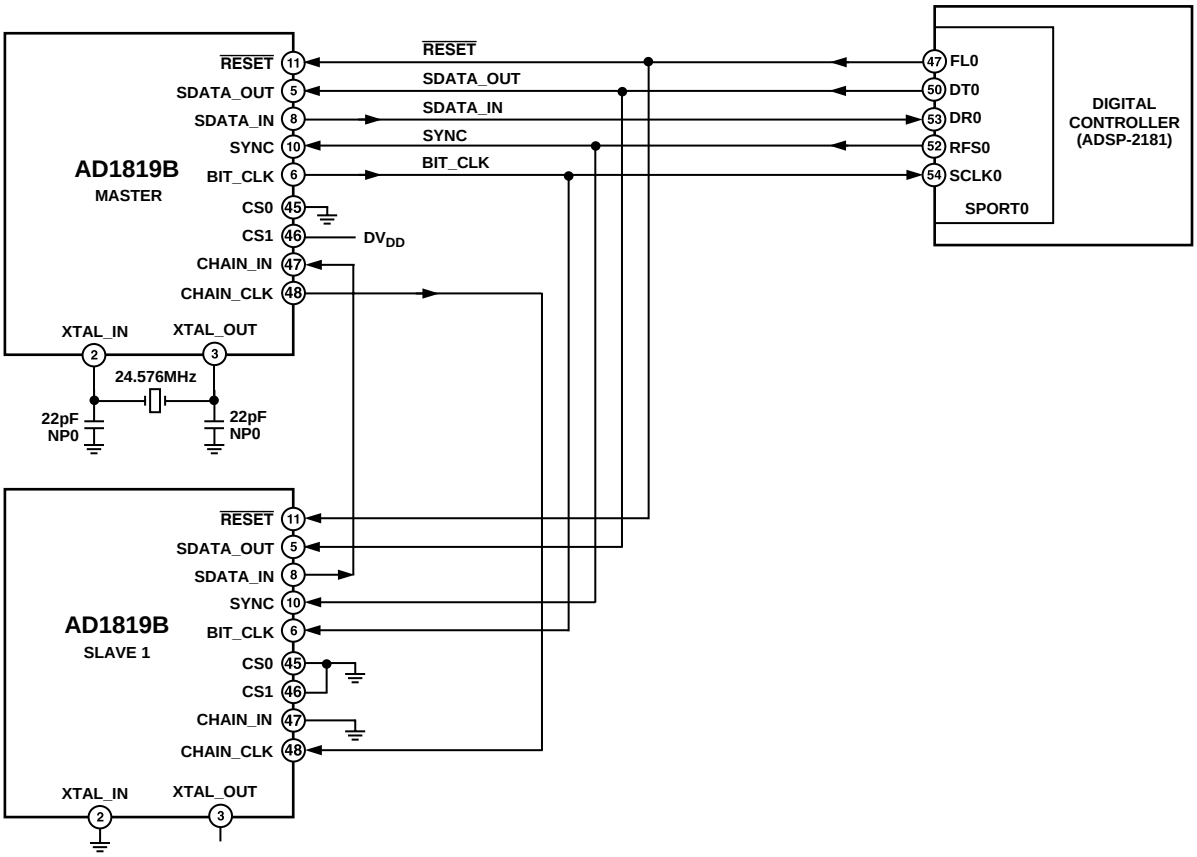

Figure 17. Two Codec System Example

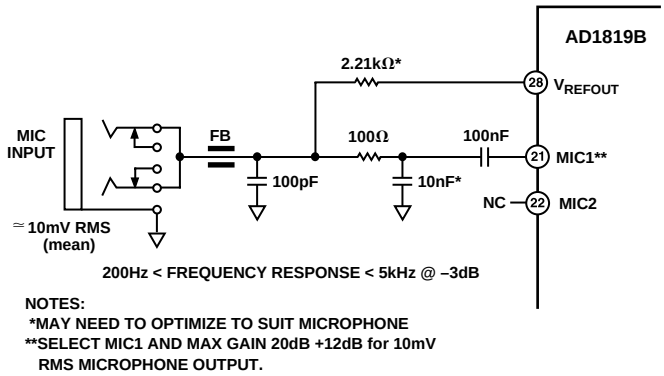

Figure 18. Microphone Input

OUTLINE DIMENSIONS

Dimensions shown in inches and (mm).

48-Terminal LQFP (ST-48)

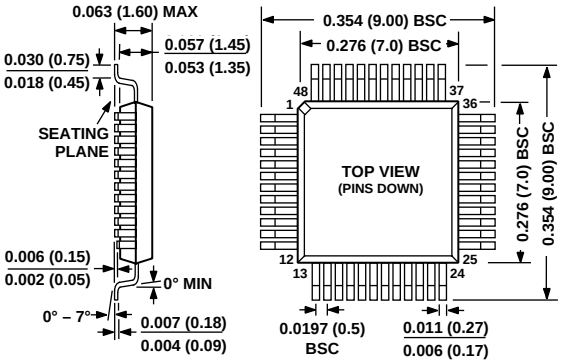

C3681–2–10/99

PRINTED IN U.S.A.

ООО «ЛайфЭлектроникс» “LifeElectronics” LLC

ИНН 7805602321 КПП 780501001 Р/С 40702810122510004610 ФАКБ "АБСОЛЮТ БАНК" (ЗАО) в г.Санкт-Петербурге К/С 30101810900000000703 БИК 044030703

Компания «Life Electronics» занимается поставками электронных компонентов импортного и отечественного производства от производителей и со складов крупных дистрибьюторов Европы, Америки и Азии.

С конца 2013 года компания активно расширяет линейку поставок компонентов по направлению коаксиальный кабель, кварцевые генераторы и конденсаторы (керамические, пленочные, электролитические), за счёт заключения дистрибьюторских договоров

Мы предлагаем:

- *Конкурентоспособные цены и скидки постоянным клиентам.*
- *Специальные условия для постоянных клиентов.*
- *Подбор аналогов.*
- *Поставку компонентов в любых объемах, удовлетворяющих вашим потребностям.*

- *Приемлемые сроки поставки, возможна ускоренная поставка.*
- *Доставку товара в любую точку России и стран СНГ.*
- *Комплексную поставку.*
- *Работу по проектам и поставку образцов.*
- *Формирование склада под заказчика.*

- *Сертификаты соответствия на поставляемую продукцию (по желанию клиента).*
- *Тестирование поставляемой продукции.*
- *Поставку компонентов, требующих военную и космическую приемку.*
- *Входной контроль качества.*
- *Наличие сертификата ISO.*

В составе нашей компании организован Конструкторский отдел, призванный помогать разработчикам, и инженерам.

Конструкторский отдел помогает осуществить:

- *Регистрацию проекта у производителя компонентов.*
- *Техническую поддержку проекта.*
- *Защиту от снятия компонента с производства.*
- *Оценку стоимости проекта по компонентам.*
- *Изготовление тестовой платы монтаж и пусконаладочные работы.*

Тел: +7 (812) 336 43 04 (многоканальный)
Email: org@lifeelectronics.ru

www.lifeelectronics.ru