THIS DRAWING IS UNPUBLISHED. RELEASED FOR PUBLICATION 20
© COPYRIGHT 20 BY - ALL RIGHTS RESERVED.

LOC	DIST
GP	00

REVISIONS

P	LTR	DESCRIPTION	DATE	DWN	APVD
	A	RELEASED ECO-14-003627	11APR2014	LAW	EB

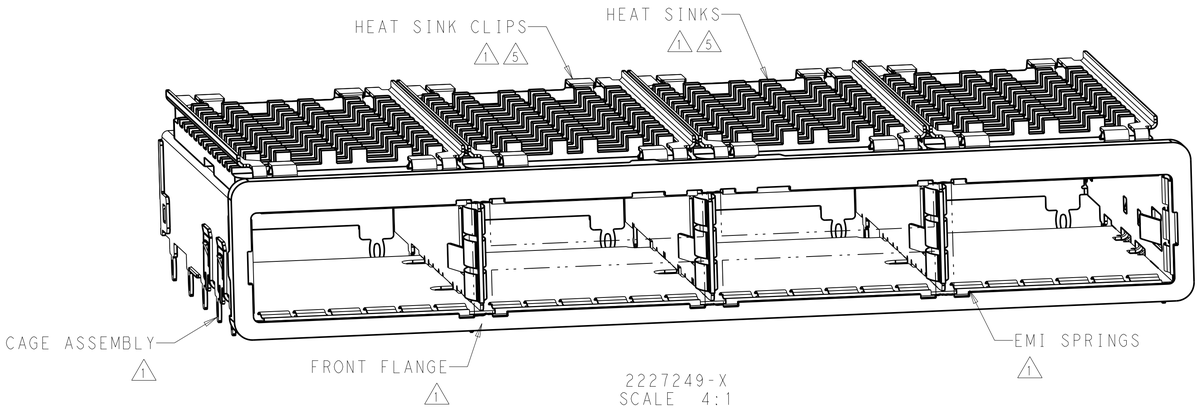

1. MATERIALS/FINISH:
   CAGE ASSEMBLY - NICKEL-SILVER ALLOY, (0.25) THICK
   EMI SPRINGS - COPPER ALLOY/2µm MIN TIN
   FRONT FLANGE - ZINC ALLOY/3µm MIN TIN OVER 1.27µm MIN NICKEL OVER 5.08µm MIN COPPER
   HEAT SINK - ALUMINUM/NICKEL
   HEAT SINK CLIP - STAINLESS STEEL
2. SPACING BETWEEN CAGES ON THE SAME PCB TO BE SPECIFIED BY THE CUSTOMER, MUST COMPLY WITH MINIMUM DIMENSION SHOWN
3. REFERENCE APPLICATION SPECIFICATION 114-32023 FOR RECOMMENDED DRILL HOLE DIAMETER AND PLATING THICKNESS
4. DATUMS AND BASIC DIMENSIONS ESTABLISHED BY CUSTOMER
5. HEAT SINKS AND CLIPS ARE SHIPPED ASSEMBLED, CAGE ASSEMBLY MAY BE PRESSED INTO THE PCB AS SHIPPED
6. DIMENSION APPLIES WITH MODULE INSERTED IN CAGE
7. UNPLATED THRU HOLE
8. MATES WITH QSFP MSA COMPATIBLE TRANSCEIVER
9. SURFACE TRACES PERMITTED WITHIN THIS AREA EXCEPT WHERE CAGE STANDOFFS CONTACT PCB
10. BASELINE FOR THESE DIMENSIONS IS THE CENTER OF COMPLIANT PIN HOLE
11. DATE CODE (YYWWD) IS MARKED ON TOP OF CAGE BUT IS CONCEALED BY HEAT SINKS, APPLIES TO CAGE ASSEMBLY ONLY
12. REFERENCE APPLICATION SPECIFICATION 114-32023 FOR GASKET THICKNESS CALCULATION
13. DIMENSION C IS THE NOMINAL THICKNESS OF THE CUSTOMER SUPPLIED PC BOARD:
    SINGLE SIDED PC BOARD MINIMUM THICKNESS - 1.45
    DOUBLE SIDED PC BOARD MINIMUM THICKNESS - 2.4

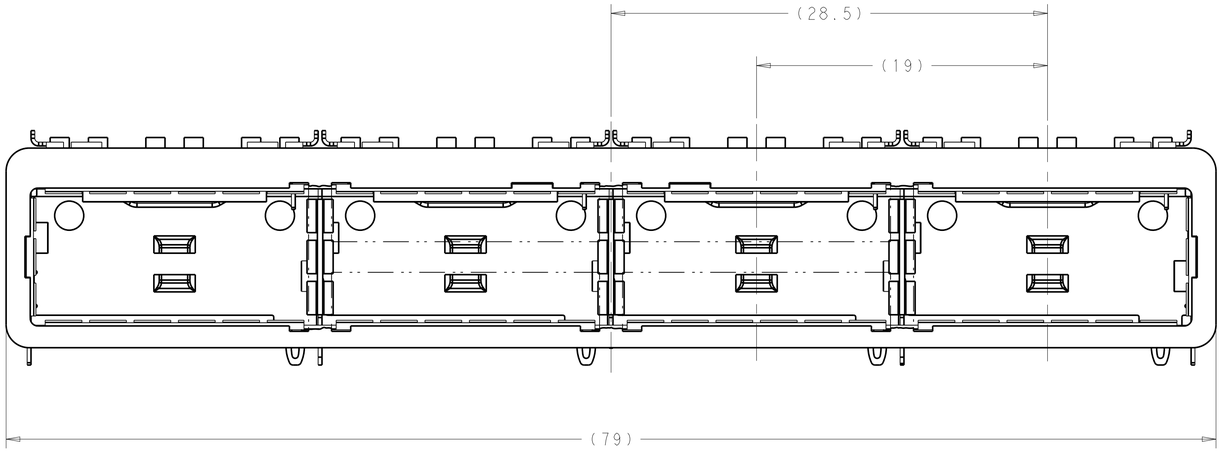

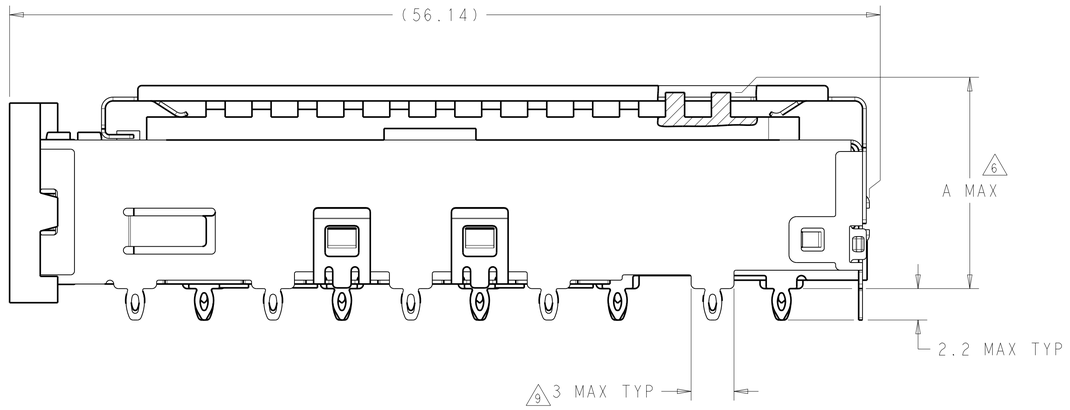

23	NETWORKING	2227249-3
16	SAN	2227249-2
13.7	PCI	2227249-1
A	HEAT SINK PROFILE	PART NUMBER

THIS DRAWING IS A CONTROLLED DOCUMENT. DIMENSIONING AND TOLERANCING PER ASME Y14.5M-2009

DIMENSIONS: mm

TOLERANCES UNLESS OTHERWISE SPECIFIED:
0 PLC ±0.2
1 PLC ±0.15
2 PLC ±0.1
3 PLC ±0.05
4 PLC ±0.025
ANGLES ±1

MATERIAL: SEE NOTES
FINISH: SEE NOTES

DWN M.E. COWHER 15AUG2012
CHK R.R. HENRY 16AUG2012
APVD R.R. HENRY 16AUG2012
PRODUCT SPEC -
APPLICATION SPEC -
WEIGHT -

TE Connectivity

NAME: RECEPTACLE ASSEMBLY WITH HEAT SINKS, BEHIND BEZEL, 1X4, QSFP28

SIZE	CAGE CODE	DRAWING NO	RESTRICTED TO
A1	00779	C-2227249	-

Customer Drawing | SCALE 5:1 | SHEET 1 OF 4 | REV A

4805 (3/11)

THIS DRAWING IS UNPUBLISHED. RELEASED FOR PUBLICATION 20
© COPYRIGHT 20 BY - ALL RIGHTS RESERVED.

LOC	DIST
GP	00

REVISIONS

P	LTR	DESCRIPTION	DATE	DWN	APVD
	-	SEE SHEET 1	-	-	-

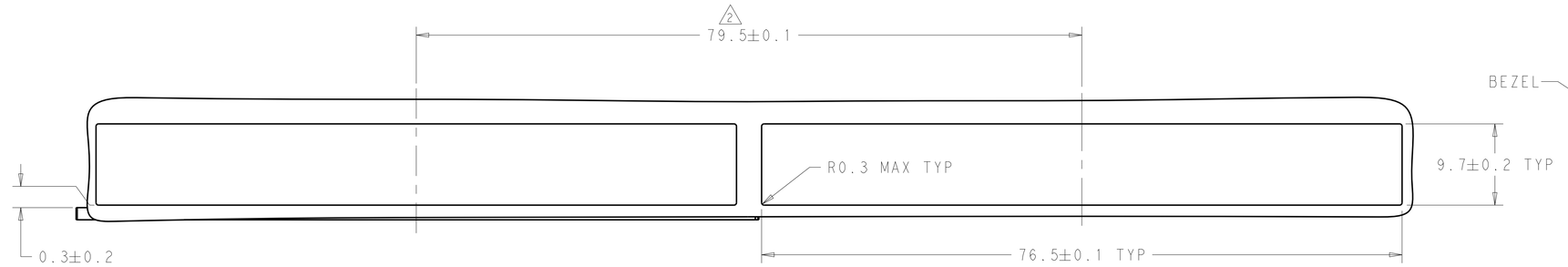

SINGLE SIDE CONFIGURATION
SCALE 3:1

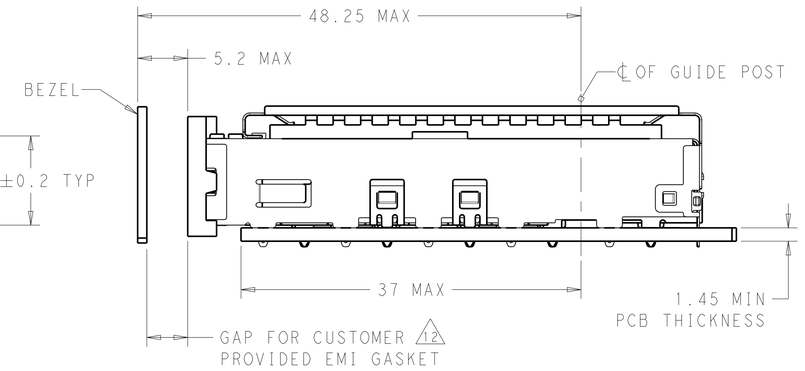

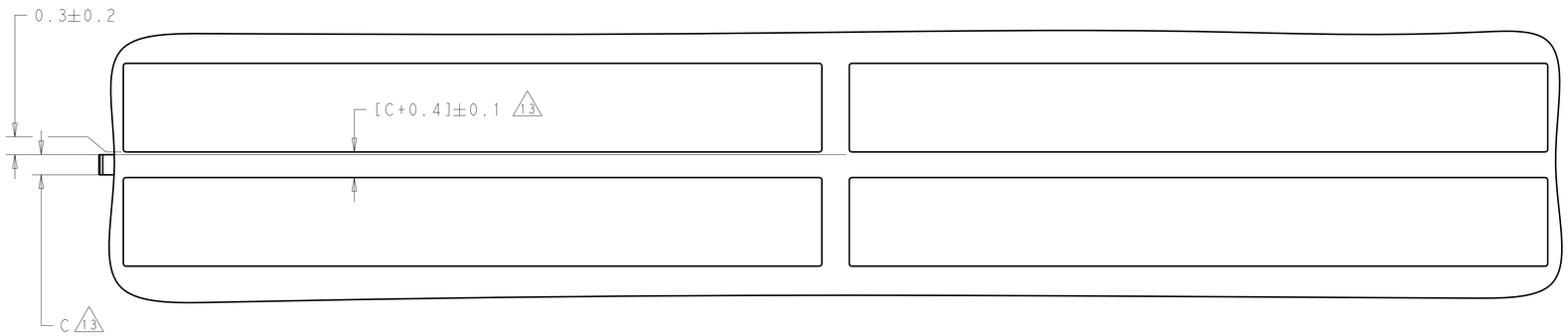

BELLY TO BELLY CONFIGURATION
SAME AS SINGLE SIDED CONFIGURATION EXCEPT AS SHOWN
SCALE 3:1

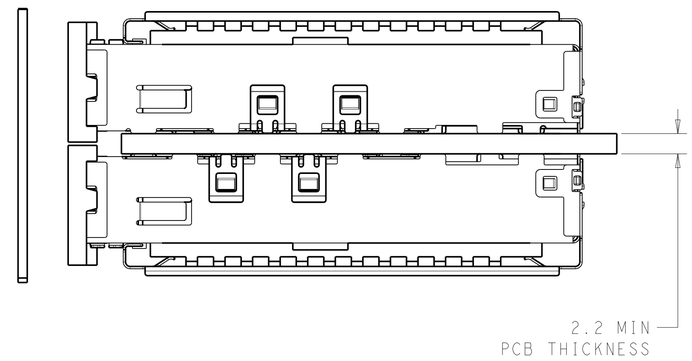

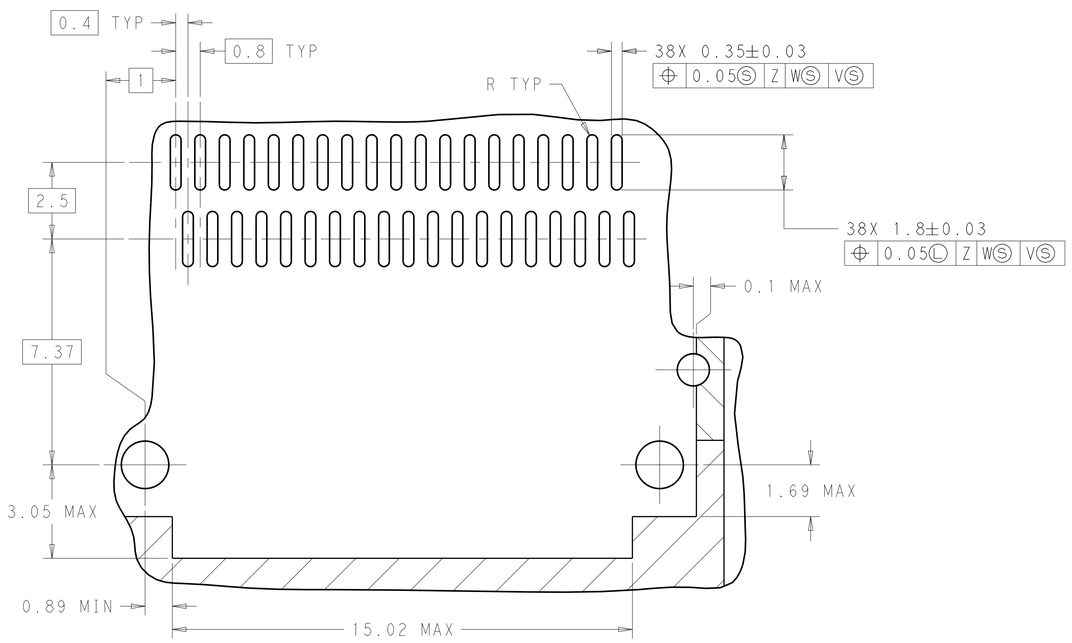

DETAIL A
4X INDIVIDUALLY
APPLIES TO BOTH SINGLE SIDE MOUNT
AND BELLY TO BELLY CONFIGURATION
SCALE 10:1

THIS DRAWING IS A CONTROLLED DOCUMENT.
DIMENSIONING AND TOLERANCING
PER ASME Y14.5M-2009

DIMENSIONS: mm

TOLERANCES UNLESS OTHERWISE SPECIFIED:
0 PLC ±0.2
1 PLC ±0.15
2 PLC ±0.1
3 PLC ±0.05
4 PLC ±0.025
ANGLES ±1

MATERIAL SEE NOTES
FINISH SEE NOTES

DWN M.E. COWHER 15AUG2012
CHK R.R. HENRY 16AUG2012
APVD R.R. HENRY 16AUG2012
PRODUCT SPEC -
APPLICATION SPEC -
WEIGHT -

TE Connectivity

NAME RECEPTACLE ASSEMBLY WITH HEAT SINKS, BEHIND BEZEL, 1X4, QSFP28
-

SIZE	CAGE CODE	DRAWING NO	RESTRICTED TO
A1	00779	C-2227249	-

Customer Drawing | SCALE 4:1 | SHEET 2 OF 4 | REV A

4805 (3/11)

THIS DRAWING IS UNPUBLISHED. RELEASED FOR PUBLICATION 20
© COPYRIGHT 20 BY - ALL RIGHTS RESERVED.

LOC	DIST
GP	00

REVISIONS

P	LTR	DESCRIPTION	DATE	DWN	APVD
	-	SEE SHEET 1	-	-	-

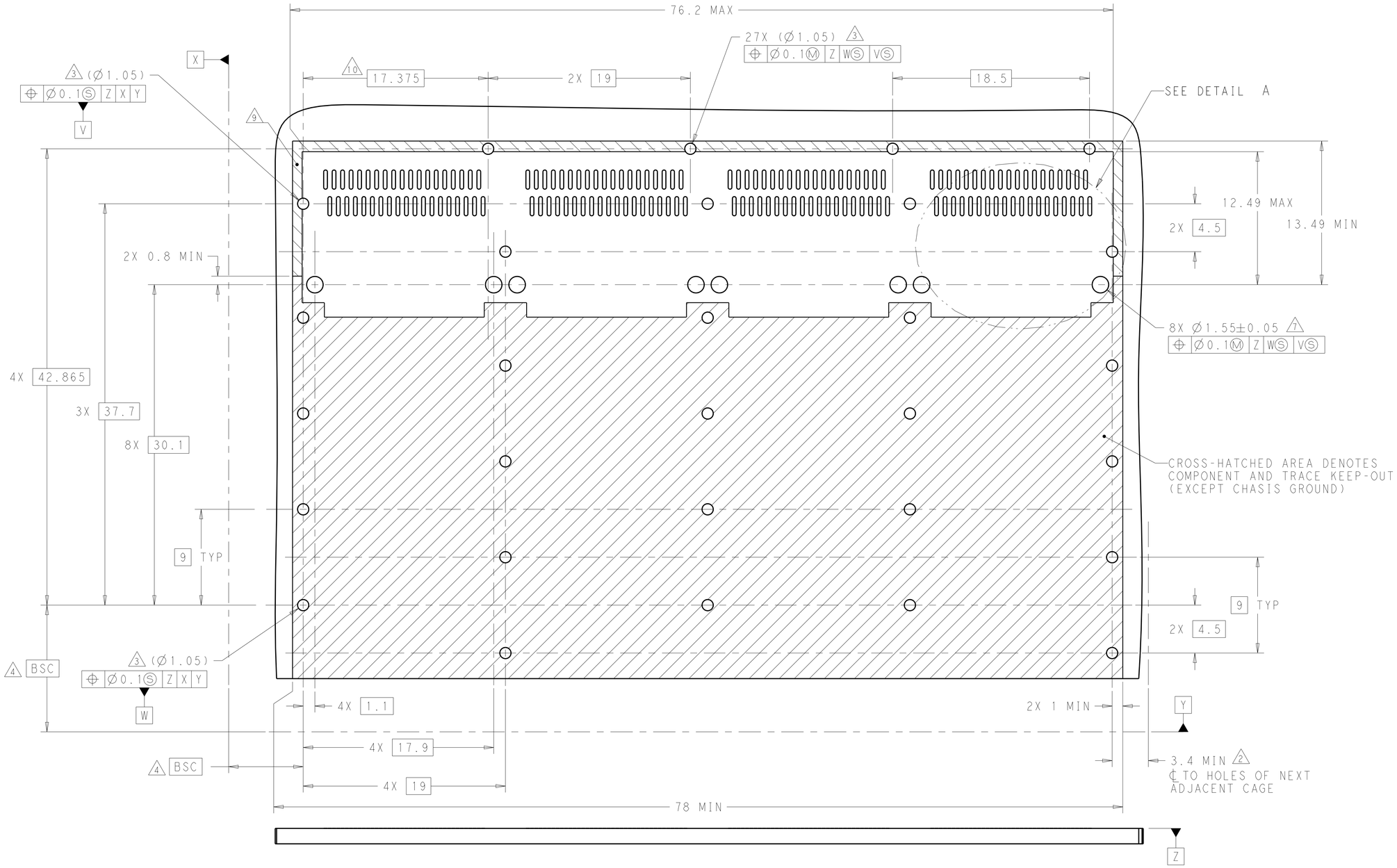

RECOMMENDED PCB LAYOUT
SINGLE SIDE MOUNT CONFIGURATION
SCALE 5:1

THIS DRAWING IS A CONTROLLED DOCUMENT. DIMENSIONING AND TOLERANCING PER ASME Y14.5M-2009

DIMENSIONS: mm

TOLERANCES UNLESS OTHERWISE SPECIFIED:
0 PLC ±0.2
1 PLC ±0.15
2 PLC ±0.1
3 PLC ±0.05
4 PLC ±0.025
ANGLES ±1

MATERIAL: SEE NOTES
FINISH: SEE NOTES

DWN M.E. COWHER 15AUG2012
CHK R.R. HENRY 16AUG2012
APVD R.R. HENRY 16AUG2012

PRODUCT SPEC -
APPLICATION SPEC -
WEIGHT -

TE Connectivity

NAME: RECEPTACLE ASSEMBLY WITH HEAT SINKS, BEHIND BEZEL, 1X4, QSFP28 -

SIZE	CAGE CODE	DRAWING NO	RESTRICTED TO
A1	00779	C-2227249	-

Customer Drawing

SCALE 4:1 SHEET 3 OF 4 REV A

4805 (3/11)

THIS DRAWING IS UNPUBLISHED. RELEASED FOR PUBLICATION 20
© COPYRIGHT 20 BY - ALL RIGHTS RESERVED.

LOC	DIST
GP	00

REVISIONS

P	LTR	DESCRIPTION	DATE	DWN	APVD
	-	SEE SHEET 1	-	-	-

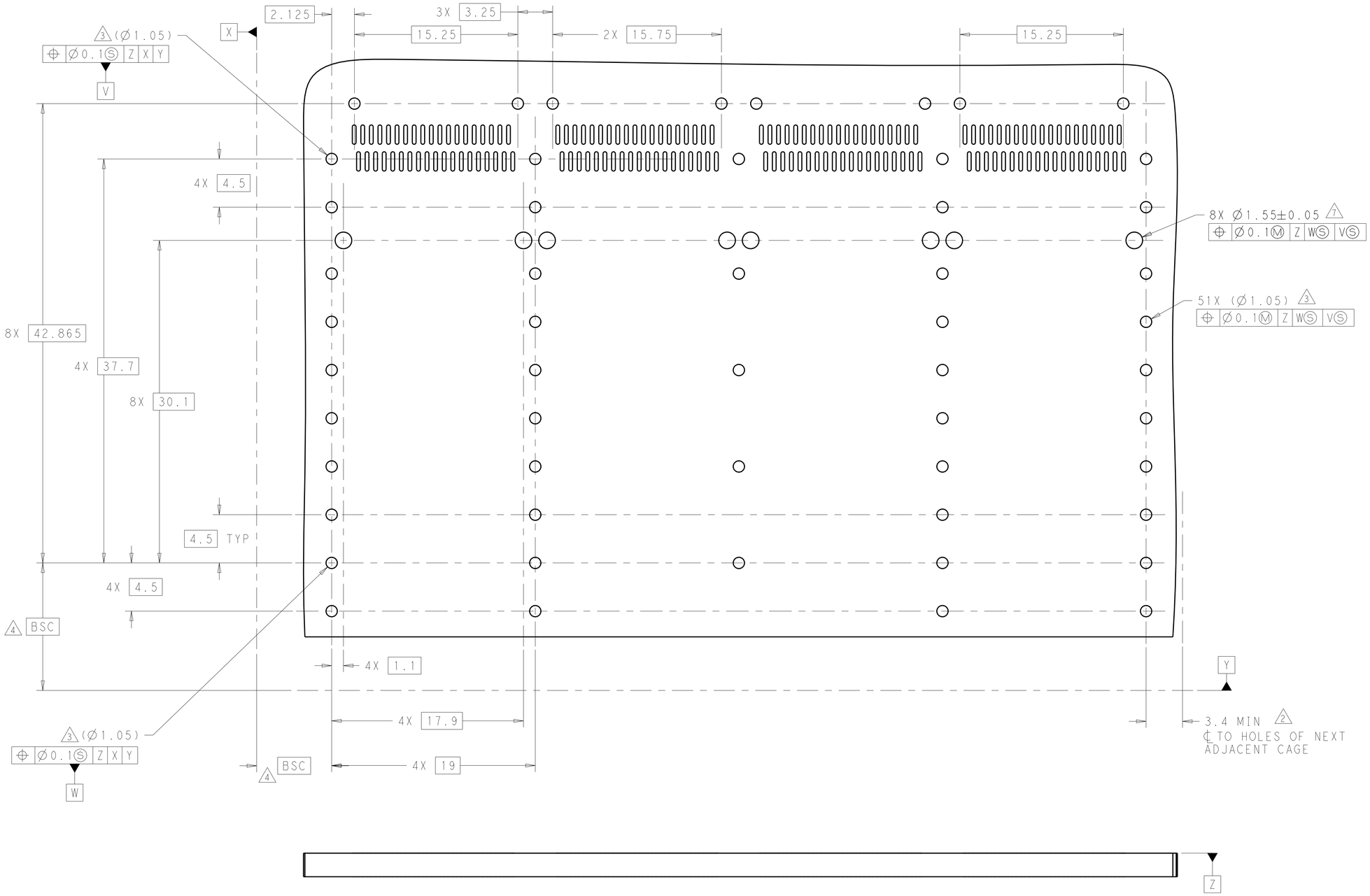

RECOMMENDED PCB LAYOUT
BELLY TO BELLY CONFIGURATION
SEE SINGLE SIDE MOUNT CONFIGURATION
FOR COMPONENT AND TRACE KEEP-OUT
SCALE 5:1

THIS DRAWING IS A CONTROLLED DOCUMENT.
DIMENSIONING AND TOLERANCING
PER ASME Y14.5M-2009

DIMENSIONS: mm

TOLERANCES UNLESS OTHERWISE SPECIFIED:
0 PLC ±0.2
1 PLC ±0.15
2 PLC ±0.1
3 PLC ±0.05
4 PLC ±0.025
ANGLES ±1

MATERIAL SEE NOTES
FINISH SEE NOTES

DWN M.E. COWHER 15AUG2012
CHK R.R. HENRY 16AUG2012
APVD R.R. HENRY 16AUG2012
PRODUCT SPEC -
APPLICATION SPEC -
WEIGHT -

TE Connectivity

NAME RECEPTACLE ASSEMBLY WITH HEAT SINKS, BEHIND BEZEL, 1X4, QSFP28
-

SIZE	CAGE CODE	DRAWING NO	RESTRICTED TO
A1	00779	C-2227249	-

Customer Drawing

SCALE	SHEET	OF	REV
4:1	4	4	A

4805 (3/11)

ООО «ЛайфЭлектроникс» “LifeElectronics” LLC

ИНН 7805602321 КПП 780501001 Р/С 40702810122510004610 ФАКБ "АБСОЛЮТ БАНК" (ЗАО) в г.Санкт-Петербурге К/С 30101810900000000703 БИК 044030703

Компания «Life Electronics» занимается поставками электронных компонентов импортного и отечественного производства от производителей и со складов крупных дистрибьюторов Европы, Америки и Азии.

С конца 2013 года компания активно расширяет линейку поставок компонентов по направлению коаксиальный кабель, кварцевые генераторы и конденсаторы (керамические, пленочные, электролитические), за счёт заключения дистрибьюторских договоров

Мы предлагаем:

- *Конкурентоспособные цены и скидки постоянным клиентам.*
- *Специальные условия для постоянных клиентов.*
- *Подбор аналогов.*
- *Поставку компонентов в любых объемах, удовлетворяющих вашим потребностям.*

- *Приемлемые сроки поставки, возможна ускоренная поставка.*
- *Доставку товара в любую точку России и стран СНГ.*
- *Комплексную поставку.*
- *Работу по проектам и поставку образцов.*
- *Формирование склада под заказчика.*

- *Сертификаты соответствия на поставляемую продукцию (по желанию клиента).*
- *Тестирование поставляемой продукции.*
- *Поставку компонентов, требующих военную и космическую приемку.*
- *Входной контроль качества.*
- *Наличие сертификата ISO.*

В составе нашей компании организован Конструкторский отдел, призванный помогать разработчикам, и инженерам.

Конструкторский отдел помогает осуществить:

- *Регистрацию проекта у производителя компонентов.*
- *Техническую поддержку проекта.*
- *Защиту от снятия компонента с производства.*
- *Оценку стоимости проекта по компонентам.*
- *Изготовление тестовой платы монтаж и пусконаладочные работы.*

Тел: +7 (812) 336 43 04 (многоканальный)
Email: org@lifeelectronics.ru

www.lifeelectronics.ru