7.4 x 3.4 x 1.8mm BUILT-IN CAPACITANCE CERAMIC RESONATOR

AWSCR-MGD

7.4 x 3.4 x 1.8mm

AWSCR-MGD

RoHS/RoHS II Compliant
Pb in ceramic, exemption (7c-I)

Moisture Sensitivity Level (MSL) – This product is not Moisture Sensitive - MSL = 1

FEATURES:

- Low resonant impedance
- Built-in load capacitors
- Suitable for RoHS compliant reflow
- Low cost solution for cost sensitive applications

APPLICATIONS:

- Remote controls, Microprocessor clocks, DVD & CD-ROMs, Electric appliances
- Consumer electronics

STANDARD SPECIFICATIONS:

Parameters		Minimum	Typical	Maximum	Units	Notes
Frequency Range		1.84		8	MHz	
Resonant Impedance (Ro)				100	Ω	1.84 MHz - 2.39 MHz
				100		2.40 MHz - 2.99 MHz
				50		3.00 MHz - 3.49 MHz
				30		3.50 MHz - 8.00 MHz
Standard Built-in Capacitance (C1=C2)		33 – 20%	33	33 + 20%	pF	1.84 MHz - 2.39 MHz
		22 – 20%	22	22 + 20%		2.40 MHz - 2.99 MHz
						3.00 MHz - 3.49 MHz
						3.50 MHz - 8.00 MHz
Frequency Tolerance		-0.5		0.5	%	
Frequency Stability		-0.3		0.3	%	-25ºC to +85ºC
Withstanding Voltage			50		V	DC , 1 min
Rating Voltage	(1) D.C.Voltage			6	V	
	(2) A.C. Voltage			15	Vp-p.	
Insulation Resistance		100			MΩ	10V, 1min
Operation Temperature		-25		85	ºC	
Storage Temperature		-55		85	ºC	
Aging Rate (Fosc) (10 years)		-0.3		0.3	%	

TEST CIRCUIT:

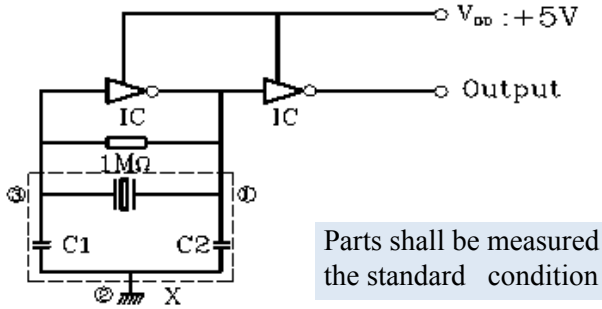

X: Ceramic Resonator
1. Input
2. Ground
3. Output

Parts shall be measured under a condition (Temp.: 20±15°C, Humidity: 65±20% R.H.) unless the standard condition (Temp: 25±3°C, Humidity: 65±10% R.H.) is regulated to measure

OPTIONS AND PART IDENTIFICATION:

(Left blank if standard)

AWSCR – X.XXMGD - C□□ - □

Frequency	Load Capacitance	Packaging
Frequency in MHz	Contact ABRACON for Built-in Capacitance options	T: 1000pcs/Reel T4: 4000pcs/Reel

30332 Esperanza, Rancho Santa Margarita, California 92688
tel 949-546-8000 | fax 949-546-8001 | www.abracon.com

7.4 x 3.4 x 1.8mm BUILT-IN CAPACITANCE CERAMIC RESONATOR

AWSCR-MGD

AWSCR-MGD

7.4 x 3.4 x 1.8mm

AWSCR-MGD

RoHS/RoHS II Compliant
Pb in ceramic, exemption (7c-I)

OUTLINE DRAWING:

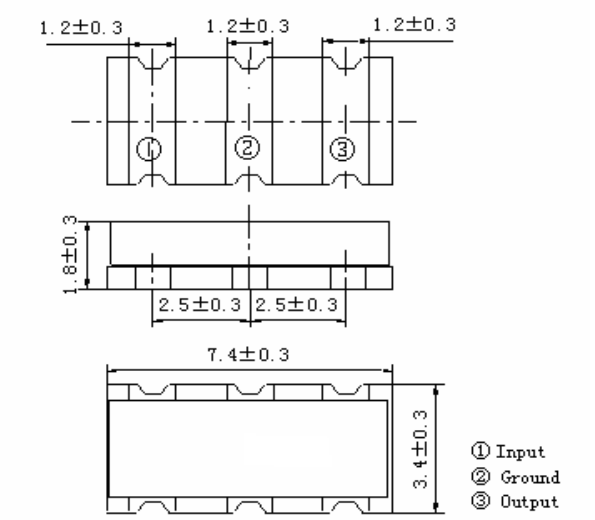

Recommended Land Pattern

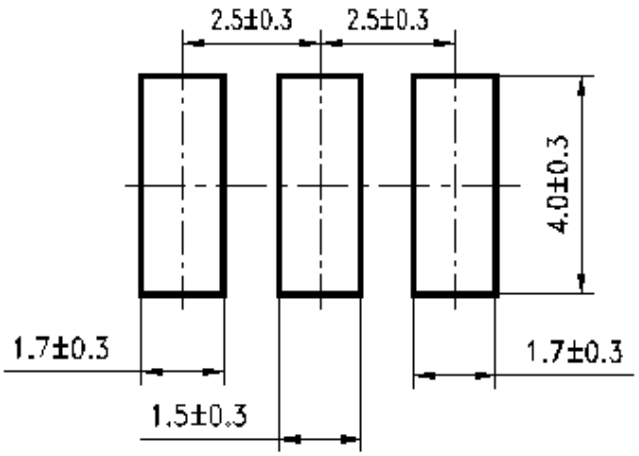

Dimension: mm

TAPE & REEL:

T: 1000pcs/reel
T4: 4000pcs/reel

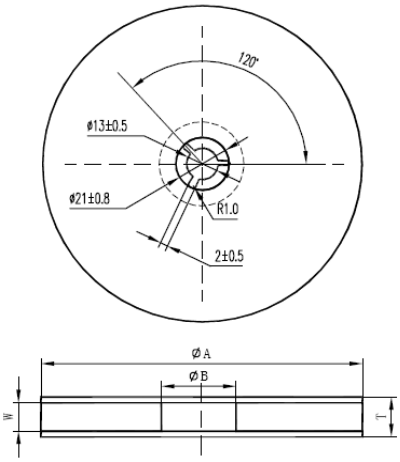

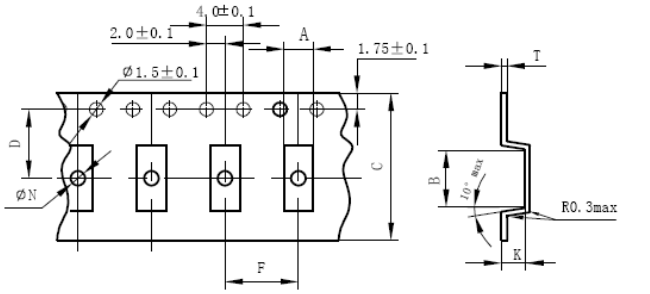

A	B	C	D	F	ØN	K	T	对应产品
3.8±0.2	7.8±0.2	16.0±0.2	7.5±0.1	8.0±0.1	1.55±0.05	2.1±0.1	0.3±0.05	CC

Reel Quantity	ΦA	ΦB	W	T	Pieces per reel	Carrier tape size
1000 (T)	179±2	60 typ.	16.4 min	22.4 max	1000 typ.	16
4000 (T4)	330±3	80 min	16.4 min	22.4 max	4000 typ.	16

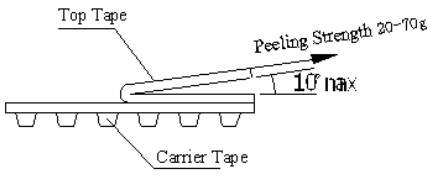

Dimension: mm

Note: upon opening the original packaging, it is recommended that the product be used within 1 year. If the product will not be used within 1 year, it is recommended that the product be re-sealed in airtight packaging according to MSL 1 requirements to maintain solderability.

30332 Esperanza, Rancho Santa Margarita, California 92688
tel 949-546-8000 | fax 949-546-8001 | www.abracon.com

7.4 x 3.4 x 1.8mm BUILT-IN CAPACITANCE CERAMIC RESONATOR

AWSCR-MGD

AWSCR-MGD

7.4 x 3.4 x 1.8mm

AWSCR-MGD

RoHS/RoHS II Compliant
Pb in ceramic, exemption (7c-I)

REFLOW PROFILE:

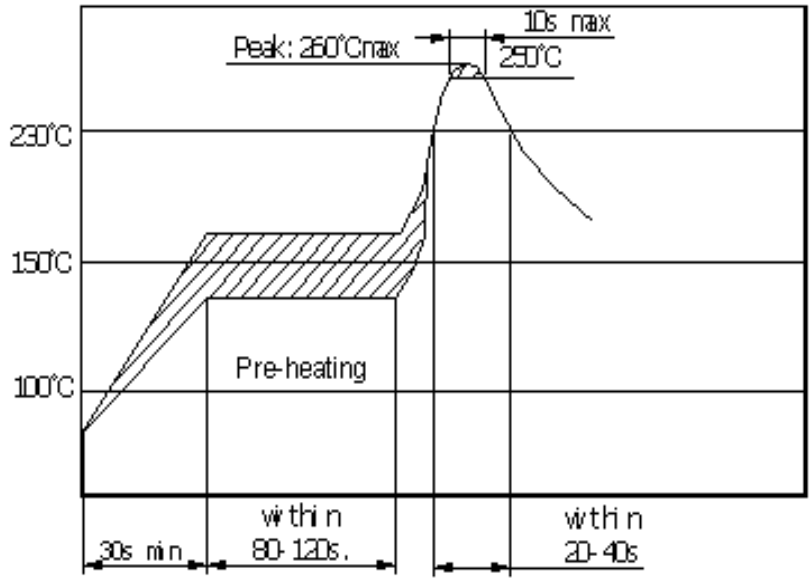

Dimension: mm

CAUTION:

- Do not apply excess mechanical stress to the component body or terminations. Do not attempt to re-form or bend the components as this will cause damage to the component.
- This component is not hermetically sealed. Do not clean or wash the component.
- Reflow soldering: Do not use strong acidity flux, such as flux with chlorine content of greater than 0.2wt% during reflow Soldering.
- Do not expose the component to open flame.
- This specification applies to the functionality of the component as a single unit. Customers are advised to insure that the component is thoroughly evaluated in the particular application.
- Storage conditions: If the product is to be stored for a period greater than six months after the delivery date, it is recommended that customers confirm the solderability and characteristics for the product prior to use.
- This product is not recommended for use in the following applications: Automotive, Medical, Military, Safety, or any other high-reliability, life-dependant application. Contact Abracon Corporation prior to using this product when in doubt.

ATTENTION: Abracon Corporation's products are COTS – Commercial-Off-The-Shelf products; suitable for Commercial, Industrial and, where designated, Automotive Applications. Abracon's products are not specifically designed for Military, Aviation, Aerospace, Life-dependant Medical applications or any application requiring high reliability where component failure could result in loss of life and/or property. For applications requiring high reliability and/or presenting an extreme operating environment, written consent and authorization from Abracon Corporation is required. Please contact Abracon Corporation for more information.

30332 Esperanza, Rancho Santa Margarita, California 92688
tel 949-546-8000 | fax 949-546-8001 | www.abracon.com

LifeElectronics
Живое партнерство

ООО «ЛайфЭлектроникс» **“LifeElectronics” LLC**

ИНН 7805602321 КПП 780501001 Р/С 40702810122510004610 ФАКБ "АБСОЛЮТ БАНК" (ЗАО) в г.Санкт-Петербурге К/С 30101810900000000703 БИК 044030703

Компания «Life Electronics» занимается поставками электронных компонентов импортного и отечественного производства от производителей и со складов крупных дистрибьюторов Европы, Америки и Азии.

С конца 2013 года компания активно расширяет линейку поставок компонентов по направлению коаксиальный кабель, кварцевые генераторы и конденсаторы (керамические, пленочные, электролитические), за счёт заключения дистрибьюторских договоров

Мы предлагаем:

- *Конкурентоспособные цены и скидки постоянным клиентам.*
- *Специальные условия для постоянных клиентов.*
- *Подбор аналогов.*
- *Поставку компонентов в любых объемах, удовлетворяющих вашим потребностям.*

- *Приемлемые сроки поставки, возможна ускоренная поставка.*
- *Доставку товара в любую точку России и стран СНГ.*
- *Комплексную поставку.*
- *Работу по проектам и поставку образцов.*
- *Формирование склада под заказчика.*

- *Сертификаты соответствия на поставляемую продукцию (по желанию клиента).*
- *Тестирование поставляемой продукции.*
- *Поставку компонентов, требующих военную и космическую приемку.*
- *Входной контроль качества.*
- *Наличие сертификата ISO.*

В составе нашей компании организован Конструкторский отдел, призванный помогать разработчикам, и инженерам.

Конструкторский отдел помогает осуществить:

- *Регистрацию проекта у производителя компонентов.*
- *Техническую поддержку проекта.*
- *Защиту от снятия компонента с производства.*
- *Оценку стоимости проекта по компонентам.*
- *Изготовление тестовой платы монтаж и пусконаладочные работы.*

Тел: +7 (812) 336 43 04 (многоканальный)
Email: org@lifeelectronics.ru

www.lifeelectronics.ru