26-A, 12-V INPUT NON-ISOLATED WIDE-OUTPUT ADJUST POWER MODULE

FEATURES

- **Up to 26 A Output Current**
- **12-V Input Voltage**
- **Wide-Output Voltage Adjust (1.2 V to 5.5 V) / (0.8 V to 1.8 V)**
- **Efficiencies up to 94%**
- **235 W/in^3 Power Density**
- **On/Off Inhibit**
- **Output Voltage Sense**
- **Prebias Startup**
- **Margin Up/Down Controls**
- **Dual-Phase Topology**
- **Auto-Track™ Sequencing**
- **Undervoltage Lockout**
- **Output Overcurrent Protection (Non-Latching, Auto-Reset)**
- **Overtemperature Protection**
- **Operating Temperature: –40°C to 85°C**
- **Safety Agency Approvals: UL/IEC/CSA-C22.2 60950-1**
- **Point of Load Alliance (POLA) Compatible**

APPLICATIONS

- **Multi-voltage, multi-processor systems**

Nominal Size = 1.37 in x 1.12 in (34,8 mm x 28,5 mm)

DESCRIPTION

The PTH12030 is a series of high current, non-isolated power module from Texas Instruments. This product is characterized by high efficiencies, and up to 26 A of output current, while occupying a small PCB area of 1.64 in^2. In terms of cost, size, and performance, the series provides OEM's with a flexible module that meets the requirements of the most complex and demanding mixed-signal applications. These include the most densly populated, multiprocessor systems that incorporate the high-speed TMS320™ DSP family, microprocessors, and ASICs.

The series uses double-sided surface mount construction and provides high-performance step-down power conversion from a 12-V input bus voltage. The output voltage of the W-suffix parts can be set to any value over the range, 1.2 V to 5.5 V. The L-suffix parts have an adjustment range of 0.8 V to 1.8 V. The output voltage is set using a single resistor.

This series includes Auto-Track™. Auto-Track simplifies power-up and power-down supply voltage sequencing in a system by enabling modules to track each other, or any other external voltage.

Each model also includes an on/off inhibit, output voltage adjust (trim), and margin up/down controls, and the ability to start up into an existing prebias. An output voltage sense ensures tight load regulation, and an output overcurrent and thermal shutdown feature provide for protection against external load faults.

Package options inlude both through-hole and surface mount configurations.

Please be aware that an important notice concerning availability, standard warranty, and use in critical applications of Texas Instruments semiconductor products and disclaimers thereto appears at the end of this data sheet.

Auto-Track, TMS320, POLA are trademarks of Texas Instruments.

PRODUCTION DATA information is current as of publication date. Products conform to specifications per the terms of the Texas Instruments standard warranty. Production processing does not necessarily include testing of all parameters.

Copyright © 2003–2008, Texas Instruments Incorporated

These devices have limited built-in ESD protection. The leads should be shorted together or the device placed in conductive foam during storage or handling to prevent electrostatic damage to the MOS gates.

STANDARD APPLICATION

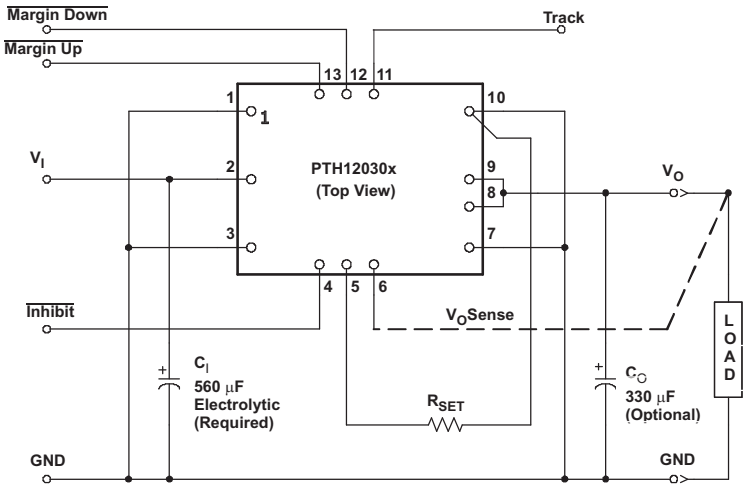

A. R_{SET} = Required to set the output voltage to a value higher than the minimum value. See the Application Information section for values.

ORDERING INFORMATION

For the most current package and ordering information, see the Package Option Addendum at the end of this datasheet, or see the TI website at www.ti.com.

ABSOLUTE MAXIMUM RATINGS

Over operating free-air temperature range, all voltages are with respect to GND (unless otherwise noted)

				MIN	TYP	MAX	UNIT
V_{Track}	Track pin voltage			–0.3		V_I + 0.3	V
T_A	Operating Temperature Range	Over V_I range		–40		85	°C
T_{wave}	Wave solder temperature	Surface temperature of module body or pins **(5seconds maximum)**	PTH12030WAH			260	°C
			PTH12030WAD				
T_{reflow}	Solder reflow temperature	Surface temperature of module body or pins	PTH12030WAS			235 (1)	°C
			PTH12030WAZ			260 (1)	°C
T_{stg}	Storage Temperature	Storage temperature of module removed from shipping package		–55		125	°C
T_{pkg}	Packaging temperature	Shipping Tray or Tape and Reel storage or bake temperature				45	°C
	Mechanical Shock	Per Mil-STD-883D, Method 2002.3, 1 ms, 1/2 Sine, mounted			500		G
	Mechanical Vibration	Mil-STD-883D, Method 2007.2 20-2000 Hz			15		G
	Weight				10		grams
	Flammability	Meets UL 94V-O					

(1) During soldering of package version, do not elevate peak temperature of the module, pins, or internal components above the stated maximum.

Copyright © 2003–2008, Texas Instruments Incorporated

ELECTRICAL CHARACTERISTICS

T_A = 25°C, V_I = 12 V, V_O = 3.3 V, C_I = 560 µF, C_O = 0 µF, and I_O = $I_O$max (unless otherwise stated)

CHARACTERISTICS		CONDITIONS			PTH12030W MIN	PTH12030W TYP	PTH12030W MAX	UNIT
I_O	Output current	60°C, 200 LFM airflow			0		26(1)	A
		25°C, natural convection			0		26(1)	
V_I	Input voltage range	Over I_O range			10.2		13.8	V
V_O tol	Set-point voltage tolerance						±2(2)	%V_O
ΔReg_{temp}	Temperature variation	–40°C < T_A < 85°C				±0.5		%V_O
ΔReg_{line}	Line regulation	Over V_I range				±5		mV
ΔReg_{load}	Load regulation	Over I_O range				±5		mV
ΔReg_{tot}	Total qutput variation	Includes set-point, line, load, –40 °C ≤ T_A ≤ 85 °C					±3(2)	%V_O
ΔV_{adj}	V_O adjust range	Over V_I range			1.2		5.5	V
η	Efficiency	I_O = 18 A	R_{SET} = 280 Ω	V_O = 5 V		94.5%		
			R_{SET} = 2 kΩ	V_O = 3.3 V		92.7%		
			R_{SET} = 4.32 kΩ	V_O = 2.5 V		91.4%		
			R_{SET} = 11.5 kΩ	V_O = 1.8 V		89.5%		
			R_{SET} = 24.3 kΩ	V_O = 1.5 V		88.2%		
			R_{SET} = open circuit	V_O = 1.2 V		86.2%		
	V_O ripple (peak-to-peak)	20-MHz bandwidth		All Voltages		25		mV_{PP}
I_O trip	Overcurrent threshold	Reset, followed by auto-recovery				50		A
t_{tr}	Transient response	1 A/µs load step, 50 to 100% $I_O$max, C_O= 330 µF		Recovery Time		50		µS
ΔV_{tr}				V_O over/undershoot		150		mV
	Margin control (pins 12&13)	Margin up/down adjust				±5%		
		Margin input current, Pin to GND				-8(3)		µA
I_{IL} track	Track input current (pin 11)	Pin to GND					-0.13(4)	µA
dV_{track}/dt	Track slew rate capability	C_O ≤ C_O(max)					1	V/ms
UVLO	Undervoltage lockout	V_I increasing				9.5		V
		V_I decreasing				8.5		
Inhibit control (pin 4)	Input high voltage (V_{IH})	Referenced to GND			2.5		Open(5)	V
	Input low voltage (V_{IL})	Referenced to GND			–0.2		0.5	
	Input low current (I_{IL})	Pin 4 to GND				0.5		µA
I_I inh	Input standby current	Inhibit (pin 4) to GND, track (pin 11) V_I				10		mA
*f*s	Switching frequency	Over V_I and I_O ranges			475	575	675	kHz
C_I	External input capacitance				560(6)			µF
C_O	External output capacitance	Capacitance value		nonceramic	0	330(7)	7,150(8)	µF
				ceramic	0		300	
		Equiv. series resistance (nonceramic)			4(9)			mΩ
MTBF	Reliability	Bellcore TR-332, 50% stress, T_A=40°C, ground benign			3			10^6 Hrs

(1) See SOA curves or consult factory for appropriate derating.
(2) The set-point voltage tolerance is affected by the tolerance and stability of R_{SET}. The stated limit is unconditionally met if R_{SET} has a tolerance of 1 %, with 100 ppm/°C (or better) temperature stability.
(3) A small, low-leakage (<100 nA) MOSFET is recommended to control this pin. The open-circuit voltage is less than 1 Vdc.
(4) A low-leakage (<100 nA), open-drain device, such as MOSFET or voltage supervisor IC, is recommended to control this pin.
(5) This control pin is pulled up to an internal 5-V source. To avoid risk of damage to the module, **do not** apply an external voltage greater than 7 V. If it is left open-circuit, the module operates when input power is applied. A small, low-leakage (<100 nA) MOSFET or open-drain/collector voltage supervisor IC is recommended for control. For further info, see the related application information section.
(6) A 560 µF electrolytic input capacitor, rated for a minimum of 500 mArms of ripple current is required for proper operation.
(7) An external output capacitor is not required for basic operation. Adding 330 µF of distributed capacitance at the load will improve the transient response.
(8) This is the calculated maximum. The minimum ESR limitation often results in a lower value. See the application information section.
(9) This is the typical ESR for all the electrolytic (nonceramic) ouput capacitance. Use 7 mΩ as the minimum when using max-ESR values to calculate.

Copyright © 2003–2008, Texas Instruments Incorporated

ELECTRICAL CHARACTERISTICS

T_A = 25°C, V_I = 12 V, V_O = 3.3 V, C_I= 560 µF, C_O = 0 µF, and I_O = $I_O$max (unless otherwise stated)

					PTH12030L			
CHARACTERISTICS		CONDITIONS			MIN	TYP	MAX	UNIT
I_O	Output current	60°C, 200 LFM airflow			0		26(1)	A
		25°C, natural convection			0		26(1)	
V_I	Input voltage range	Over I_O range			10.2		13.8	V
V_O tol	Set-point voltage tolerance						±2(2)	%V_O
ΔReg_{temp}	Temperature variation	–40°C < T_A < 85°C				±0.5		%V_O
ΔReg_{line}	Line regulation	Over V_I range				±5		mV
ΔReg_{load}	Load regulation	Over I_O range				±5		mV
ΔReg_{tot}	Total output variation	Includes set-point, line, load, –40°C ≤ T_A ≤ 85 °C					±3(2)	%V_O
ΔV_{adj}	V_O adjust range	Over V_I range			0.8		1.8	V
η	Efficiency	I_O = 18 A	R_{SET} = 130 Ω	V_O = 1.8 V		89%		
			R_{SET} = 3.57 kΩ	V_O = 1.5 V		87%		
			R_{SET} = 12.1 kΩ	V_O = 1.2 V		85%		
			R_{SET} = 32.4 kΩ	V_O = 1 V		83%		
			R_{SET} = open cct	V_O = 0.8 V		80%		
	V_O ripple (peak-to-peak)	20-MHz bandwidth				15		mV_{PP}
I_O trip	Overcurrent threshold	Reset, followed by auto-recovery				50		A
t_{tr}	Transient response	1 A/µs load step, 50 to 100% $I_o$max, C_O= 330 µF		Recovery Time		50		µS
ΔV_{tr}				V_O over/undershoot		150		mV
	Margin control (pins 12&13)	Margin up/down adjust				±5		%
		Margin input current, Pin to GND				-8(3)		µA
I_{IL} track	Track input current (pin 11)	Pin to GND					–0.13(4)	mA
dV_{track}/dt	Track slew rate capability	C_O ≤ C_O (max)					1	V/ms
UVLO	Undervoltage lockout	V_I increasing				9.5		V
		V_I decreasing				8.5		
Inhibit control (pin4)	Input high voltage (V_{IH})	Referenced to GND			2.5		Open(5)	V
	Input low voltage (V_{IL})	Referenced to GND			–0.2		0.5	
	Input low current (I_{IL})	Pin 4 to GND				0.5		mA
I_I inh	Input standby current	Inhibit (pin 4) to GND, track (pin 11) V_I				10		mA
*f*s	Switching frequency	Over V_I and I_O ranges			475	575	675	kHz
C_I	External input capacitance				560(6)			µF
C_O	External output capacitance	Capacitance value		nonceramic	0	330(7)	7150(8)	µF
				ceramic	0		300	
		Equivalent series resistance (nonceramic)			4(9)			mΩ
MTBF	Reliability	Bellcore TR-332, 50% stress, T_A= 40°C, ground benign			3			10^6 Hr

(1) See SOA curves or consult factory for appropriate derating.
(2) The set-point voltage tolerance is affected by the tolerance and stability of R_{SET}. The stated limit is unconditionally met if R_{SET} has a tolerance of 1%, with 100 ppm/°C (or better) temperature stability.
(3) A small, low-leakage (<100 nA) MOSFET is recommended to control this pin. The open-circuit voltage is less than 1 Vdc.
(4) A low-leakage (<100 nA), open-drain device, such as MOSFET or voltage supervisor IC, is recommended to control this pin.
(5) This control pin is pulled up to an internal 5-V source. To avoid risk of damage to the module, **do not** apply an external voltage greater than 7 V. If it is left open-circuit, the module operates when input power is applied. A small, low-leakage (<100 nA) MOSFET or open-drain/collector voltage supervisor IC is recommended for control. For further information, see the application information section.
(6) A 560 µF electrolytic input capacitor, rated for a minimum of 500 mArms of ripple current is required for proper operation.
(7) An external output capacitor is not required for basic operation. Adding 330 µF of distributed capacitance at the load improves the transient response.
(8) This is the calculated maximum. The minimum ESR limitation often results in a lower value. See the application information section.
(9) This is the typical ESR for all the electrolytic (non-ceramic) ouput capacitance. Use 7 mΩ as the minimum when using max-ESR values to calculate.

Copyright © 2003–2008, Texas Instruments Incorporated

DEVICE INFORMATION

TERMINAL FUNCTIONS

TERMINAL		DESCRIPTION
NAME	NO.	
GND	1,3,7,10	This is the common ground connection for the V_I and V_O power connections. It is also the 0 Vdc reference for the control inputs.
V_I	2	The positive input voltage power node to the module, which is referenced to common GND.
Inhibit(1)	4	The Inhibit pin is an open-collector/drain negative logic input that is referenced to *GND*. Applying a low-level ground signal to this input disables the module's output and turns off the output voltage. When the *Inhibit* control is active, the input current drawn by the regulator is significantly reduced. If the *Inhibit* pin is left open-circuit, the module produces an output whenever a valid input source is applied.
V_OAdjust	5	A 1% resistor must be directly connected between this pin and pin 7 (*GND*) to set the output voltage to a value higher than 0.8 V. The temperature stability of the resistor should be 100 ppm/°C (or better). The set point range for the output voltage is from 1.2 V to 5.5 V for W-suffix devices, and 0.8 V to 1.8 V for L-suffix devices. The resistor value required for a given output voltage may be calculated using a formula. If left open circuit, the module output voltage defaults to its lowest value. For further information on output voltage adjustment, see the related application information section. Table 3 gives the preferred resistor values for a number of standard output voltages.
V_OSense	6	The sense input allows the regulation circuit to compensate for voltage drop between the module and the load. For optimal voltage accuracy, V_O *Sense* should be connected to *Vout*. It can also be left disconnected.
V_O	8,9	The regulated positive power output with respect to the *GND* node.
Track	11	This is an analog control input that enables the output voltage to follow an external voltage. This pin becomes active typically 20 ms after the input voltage has been applied, and allows direct control of the output voltage from 0 V up to the nominal set-point voltage. Within this range the output will follow the voltage at the *Track* pin on a volt-for-volt basis. When the control voltage is raised above this range, the module regulates at its set-point voltage. The feature allows the output voltage to rise simultaneously with other modules powered from the same input bus. If unused, this input should be connected to V_I. *Note: Due to the undervoltage lockout feature, the output of the module cannot follow its own input voltage during power up. For more information, see the related application information section.*
Margin Down(1)	12	When this input is asserted to *GND*, the output voltage is decreased by 5% from the nominal. The input requires an open-collector (open-drain) interface. It is not TTL compatible. A lower percent change can be accomodated with a series resistor. For further information, see the related application information section.
Margin Up(1)	13	When this input is asserted to *GND*, the output voltage is increased by 5%. The input requires an open-collector (open-drain) interface. It is not TTL compatible. The percent change can be reduced with a series resistor. For further information, see the related application information section.

(1) Denotes negative logic:
Open = Normal operation
Ground = Function active

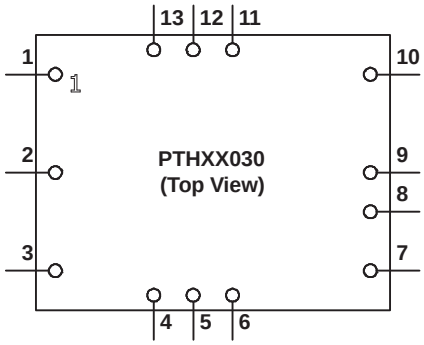

PTH12030W TYPICAL CHARACTERISTICS (V_I = 12 V)(1)(2)

EFFICIENCY vs LOAD CURRENT

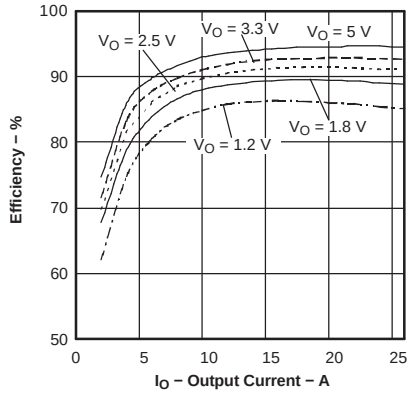

Figure 1.

OUTPUT RIPPLE vs LOAD CURRENT

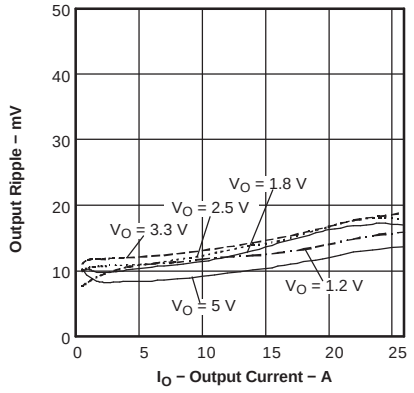

Figure 2.

POWER DISSIPATION vs LOAD CURRENT

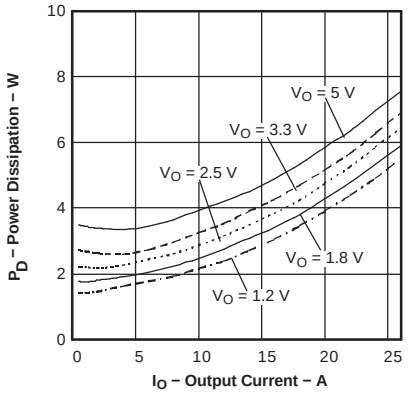

Figure 3.

TEMPERATURE DERATING vs OUTPUT CURRENT

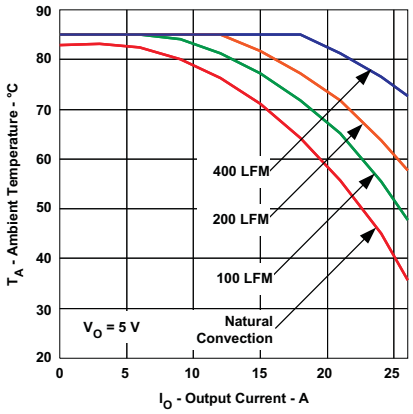

Figure 4.

TEMPERATURE DERATING vs OUTPUT CURRENT

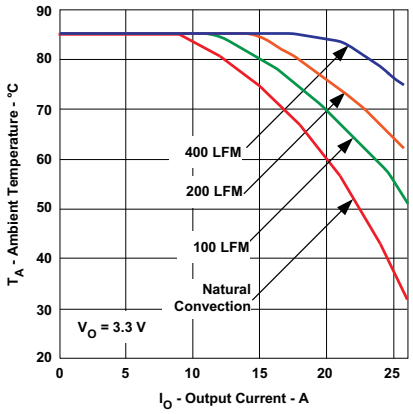

Figure 5.

(1) Characteristic data has been developed from actual products tested at 25°C. This data is considered typical data for the converter. Applies to Figure 1, Figure 2, and Figure 3.

(2) SOA curves represent the conditions at which internal components are at or below the manufacturer's maximum operating temperatures. Derating limits apply to modules soldered directly to a 4 in. × 4 in. double-sided PCB with 1 oz. copper. For surface mount products (AS and AZ suffix), multiple vias (plated through holes) are required to add thermal paths around the power pins. Please refer to the mechanical specification for more information. Applies to Figure 4.

Copyright © 2003–2008, Texas Instruments Incorporated

PTH12030L TYPICAL CHARACTERISTICS (V_I = 12 V)(1)(2)

EFFICIENCY vs LOAD CURRENT

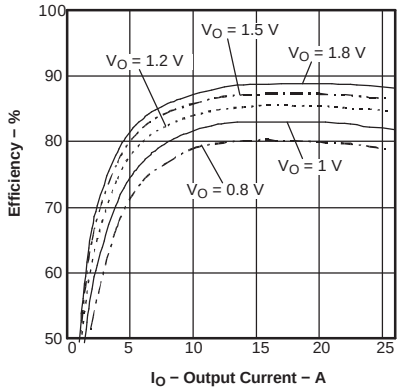

Figure 6.

OUTPUT RIPPLE vs LOAD CURRENT

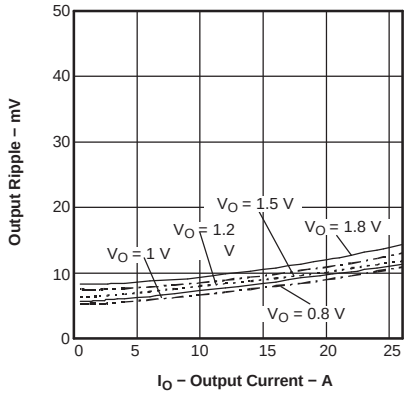

Figure 7.

POWER DISSIPATION vs LOAD CURRENT

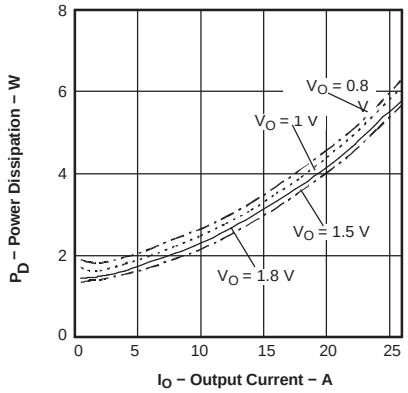

Figure 8.

TEMPERATURE DERATING vs OUTPUT CURRENT

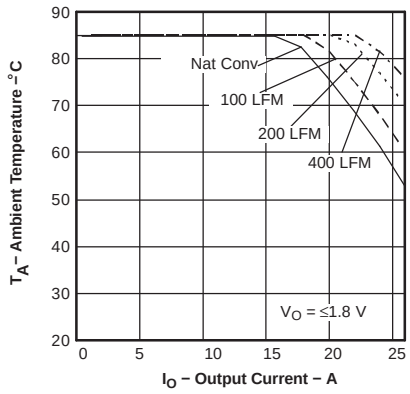

Figure 9.

(1) Characteristic data has been developed from actual products tested at 25°C. This data is considered typical data for the converter. Applies to Figure 6, Figure 7, and Figure 8.

(2) SOA curves represent the conditions at which internal components are at or below the manufacturer's maximum operating temperatures. Derating limits apply to modules soldered directly to a 4 in. × 4 in. double-sided PCB with 1 oz. copper. For surface mount products (AS and AZ suffix), multiple vias (plated through holes) are required to add thermal paths around the power pins. Please refer to the mechanical specification for more information. Applies to Figure 9.

Copyright © 2003–2008, Texas Instruments Incorporated

APPLICATION INFORMATION

ADJUSTING THE OUTPUT VOLTAGE

The V_OAdjust control (pin 5) sets the output voltage of the PTH12030W/L. The adjustment range is 1.2V to 5.5V for the W-suffix modules, and 0.8V to 1.8V for L-suffix modules. The adjustment method requires the addition of a single external resistor, R_{SET}, that must be connected directly between the V_OAdjust and GND pins[1]. Table 1 gives the standard value of the external resistor for a number of standard voltages, along with the actual output voltage that this resistance value provides. For other output voltages the required resistor can either be calculated using Equation 1, or simply selected from the range of values given in Table 3. Figure 10 shows the placement of the required resistor.

Table 1. Standard Values of R_{SET} for Standard Output Voltages

	PTH12030W		PTH12030L	
V_O (Required) (V)	R_{SET} (kΩ)	V_O (Actual) (V)	R_{SET}(kΩ)	V_O (Actual) (V)
5	0.280	5.009	N/A	N/A
3.3	2	3.294	N/A	N/A
2.5	4.32	2.503	N/A	N/A
2	8.06	2.01	N/A	N/A
1.8	11.5	1.801	0.130	1.8
1.5	24.3	1.506	3.57	1.499
1.2	Open	1.2	12.1	1.201
1.1	N/A	N/A	18.7	1.101
1	N/A	N/A	32.4	0.999
0.9	N/A	N/A	71.5	0.901
0.8	N/A	N/A	Open	0.8

Figure 10. V_o Adjust Resistor Placement

NOTES

1. R_{SET}: Use a 0.05 W resistor with a tolerance of 1% and temperature stability of 100 ppm/C (or better). Connect the resistor directly between pins 5 and 7, as close to the regulator as possible, using dedicated PCB traces.
2. Never connect capacitors from *V_OAdjust* to either *GND* or *V_O*. Any capacitance added to the *V_O Adjust* pin affects the stability of the regulator.

Use Equation 1 to calculate the adjust resistor value. See Table 2 for parameters, R_S and V_{min}.

Equation 1. Output Voltage Adjust

$$R_{SET} = 10\ k\Omega \times \frac{0.8\ V}{V_O - V_{min}} - R_S\ k\Omega \quad (1)$$

Table 2. Adjust Equation Parameters

PARAMETERS	PTH12030W	PTH12030L
$V_{(MIN)}$	1.2 V	0.8 V
$V_{(MAX)}$	5.5 V	1.8 V
R_S	1.82 kΩ	7.87 kΩ

Copyright © 2003–2008, Texas Instruments Incorporated

Table 3. Output Voltage Set-Point Resistor Values

PTH12030W				PTH12030L	
V_{OUT} (V)	R_{SET} (kΩ)	V_{OUT} (V)	R_{SET}(kΩ)	V_{OUT} (V)	R_{SET}(kΩ)
1.2	Open	2.7	3.51	0.8	Open
1.225	318	2.75	3.34	0.825	312
1.25	158	2.8	3.18	0.85	152
1.275	105	2.85	3.03	0.875	98.8
1.3	78.2	2.9	2.89	0.9	72.1
1.325	62.2	2.95	2.75	0.925	56.1
1.35	51.5	3	2.62	0.95	45.5
1.375	43.9	3.05	2.50	0.975	37.8
1.4	38.2	3.1	2.39	1	32.1
1.425	33.7	3.15	2.28	1.025	27.7
1.45	30.2	3.2	2.18	1.05	24.1
1.475	27.3	3.25	2.08	1.075	21.2
1.5	24.8	3.3	1.99	1.1	18.8
1.55	21	3.35	1.9	1.125	16.7
1.6	18.2	3.4	1.82	1.15	15
1.65	16	3.5	1.66	1.175	13.5
1.7	14.2	3.6	1.51	1.2	12.1
1.75	12.7	3.7	1.38	1.225	11
1.8	11.5	3.8	1.26	1.25	9.91
1.85	10.5	3.9	1.14	1.275	8.97
1.9	9.61	4	1.04	1.3	8.13
1.95	8.85	4.1	0.939	1.325	7.37
2	8.18	4.2	0.847	1.35	6.68
2.05	7.59	4.3	0.761	1.375	6.04
2.1	7.07	4.4	0.680	1.4	5.46
2.15	6.6	4.5	0.604	1.425	4.93
2.2	6.18	4.6	0.533	1.45	4.44
2.25	5.8	4.7	0.466	1.475	3.98
2.3	5.45	4.8	0.402	1.5	3.56
2.35	5.14	4.9	0.342	1.55	2.8
2.4	4.85	5	0.285	1.6	2.13
2.45	4.58	5.1	0.231	1.65	1.54
2.5	4.33	5.2	0.180	1.7	1.02
2.55	4.11	5.3	0.131	1.75	0.551
2.6	3.89	5.4	0.085	1.8	0.130
2.65	3.7	5.5	0.041		

Copyright © 2003–2008, Texas Instruments Incorporated

CAPACITOR RECOMMENDATIONS FOR THE PTH12030 SERIES OF POWER MODULES

INPUT CAPACITOR

The recommended input capacitor(s) is determined by the 560 µF minimum capacitance and 500 mArms minimum ripple current rating.

Ripple current, less than 100 mΩ equivalent series resistance (ESR) and temperature, are the major considerations when selecting input capacitors. Unlike polymer-tantalum capacitors, regular tantalum capacitors are not recommended for the input bus. These capacitors require a recommended minimum voltage rating of 2 × (max. dc voltage + ac ripple). When the operating temperature is below 0°C, the ESR of aluminum electrolytic capacitors increases. For these applications, Os-Con, polymer-tantalum, and polymer-aluminum types should be considered.

Adding one or two ceramic capacitors to the input further reduces high-frequency reflected ripple current.

OUTPUT CAPACITORS (OPTIONAL)

For applications with load transients, regulator response benefits from an external output capacitance. The recommended output capacitance of 330 µF allows the module to meet its transient response specification. For most applications, a high quality computer-grade aluminum eletrolytic capacitor is adequate. These capacitors provide decoupling over the frequency range, 2 kHz to 150 kHz, and are suitable when ambient temperatures are above 0°C. For operation below 0°C, tantalum, ceramic, or Os-Con type capacitors are recommended. When using one or more nonceramic capacitors, the calculated equivalent ESR should be no lower than 4 mΩ (7 mΩ using the manufacturer's maximum ESR for a single capacitor). A list of preferred low-ESR type capacitors are identified in Table 4.

CERAMIC CAPACITORS

Above 150 kHz, the performance of aluminum electrolytic capacitors is less effective. Multilayer ceramic capacitors have low ESR and a resonant frequency higher than the bandwidth of the regulator. They can be used to reduce the reflected ripple current at the input as well as improve the transient response of the output. When used on the output their combined ESR is not critical as long as the total value of ceramic capacitance does not exceed 300µF. Also, to prevent the formation of local resonances, do not place more than five identical ceramic capacitors in parallel with values of 10 µF or greater.

TANTALUM CAPACITORS

Tantalum type capacitors can only be used on the output bus, and are recommended for applications where the ambient operating temperature can be less than 0°C. The AVX TPS, Sprague 593D/594/595, and Kemet T495/T510 capacitor series are suggested over other tantalum types due to their higher rated surge, power dissipation, and ripple current capability. As a caution many general-purpose tantalum capacitors have considerably higher ESR, reduced power dissipation and lower ripple current capability. These capacitors are also less reliable as they have reduced power dissipation and surge current ratings. Tantalum capacitors that have no stated ESR or surge current rating are not recommended for power applications.

When specifying Os-con and polymer tantalum capacitors for the output, the minimum ESR limit is encountered well before the maximum capacitance value is reached.

CAPACITOR TABLE

Table 4 identifies the characteristics of capacitors from a number of vendors with acceptable ESR and ripple current (rms) ratings. The recommended number of capacitors required at both the input and output buses is identified for each capacitor type.

This is not an extensive capacitor list. Capacitors from other vendors are available with comparable specifications. Those listed are for guidance. The RMS ripple current rating and ESR (at 100 kHz) are critical parameters necessary to insure both optimum regulator performance and long capacitor life.

Copyright © 2003–2008, Texas Instruments Incorporated

Table 4. Input/Output Capacitors (1)

CAPACITOR VENDOR, TYPE/SERIES, (STYLE)	CAPACITOR CHARACTERISTICS					QUANTITY		
	WORKING VOLTAGE (V)	VALUE (µF)	MAX ESR @ 100 kHz (Ω)	MAX RIPPLE CURRENT @ 85°C (Irms)(mA)	PHYSICAL SIZE (mm)	INPUT BUS	OPTIONAL OUTPUT BUS	VENDOR PART NUMBER
Panasonic	25	330	0.090	1100	10 x 12,5	2	1	EEUFC1E331
FC, Radial	25	560	0.065	1205	12,5 x 15	1	1	EEUFC1E561S
FK, (SMD)	25	470	0.080	1100	10 x 10,2	2	1	EEVFK1E471P
FK, (SMD)	35	680	0.060	1100	12,5 x 13,5	1	1	EEVFK1V681Q
United Chemi-Con								
MVZ, Aluminum (SMD)	16	680	0.090	670	10 x 10	1	1	MVZ16VC681MJ10TP
LXZ, Aluminium (Radial))	25	680	0.068	1050	10 x 16	1	1	LXZ16VB681M10X16LL
PS, Poly-Aluminum (Radial)	16	330	0.014	5060	10 x 12,5	2	≤3	16PS330MJ12
PXA, Poly-Aluminum (SMD)	16	330	0.014	5050	10 x 12,2	2	≤3	PXA16VCMJ12
Nichicon, Aluminum	25	560	0.060	1060	12,5 x 15	1	1	UPM1E561MHH6
HD, (Radial)	16	680	0.038	1440	10 x 16	1	1	UHD1C681MHR
PM, (Radial)	35	560	0.048	1360	16 x 15	1	1	UPM1V561MHH6
Panasonic, Poly-Aluminum SE, (SMD)	6.3	180	0.005	4000	7,3x4,3x4,2	N/R (2)	1 (3)	EEFSE0J181R (V_O≤ 5.1V)
Sanyo, TPE Poscap (SMD)	10	330	0.025	3000	7,3x4,3x3,8	N/R (2)	≤4	10TPE330M
SEQP, Os-Con (Radial)	16	330	0.016	4720	10 x 13	2	≤3	16SEQP330M
SVP, Os-Con (SMD)	16	330	0.016	4700	10 x 12,6	2	≤3	16SVP330M
AVX, Tantalum, Series III	10	470	0.045	1723	7,3x5,7x4,1	N/R (2)	≤5 (3)	TPSE477M010R0045 (V_O≤ 5.1V)
TPS (SMD)	10	330	0.045	1723	7,3x5,7x4,1	N/R (2)	≤5 (3)	TPSE337M010R0045 (V_O≤ 5.1V)
Kemet, Poly-Tantalum T520, (SMD)	10	330	0.040	1800	7,3x4,3x4	N/R (2)	≤5	T520X337M010AS
T530, (SMD)	10	330	0.010	5000	7,3x4,3x4	N/R (2)	1	T530X337M010ASE010
	6.3	470	0.010	5000	7,3x4,3x4	N/R (2)	1 (3)	T530X477M006ASE010 (V_O≤ 5.1V)
Vishay-Sprague 595D, Tantalum (SMD)	10	470	0.100	1440	7,2x6x4,1	N/R (2)	≤5 (3)	595D477X0010R2T (V_O≤ 5.1V)
94SA, Os-con (Radial)	16	1,000	0.015	9740	16 x 25	1	≤2	94SA108X0016HBP
94SVP, Os-Con (SMD)	16	330	0.017	4580	10 x12,7	2	≤2	94SVP337X0016F12
Kemet, Ceramic X5R	16	10	0.002	-	1210 Case	1 (4)	≤5	C1210C106M4PAC
(SMD)	6.3	47	0.002		3225 mm	N/R (2)	≤5	C1210C476K9PAC
Murata, Ceramic X5R	6.3	100	0.002	-	1210 Case	N/R (2)	≤3	GRM32ER60J107M
(SMD)	16	47			3225 mm	1 (4)	≤5	GRM32ER61J476K
	16	22				1 (4)	≤5	GRM32ER61C226K
	16	10				1 (4)	≤5	GRM32DR61C106K
TDK, Ceramic X5R	6.3	100	0.002	-	1210 Case	N/R (2)	≤3	C3225X5R0J107MT
(SMD)	6.3	47			3225 mm	N/R (2)	≤5	C322X5R0J476MT
	16	22				1 (4)	≤5	C3225XR1C226MT
	16	10				1 (4)	≤5	C3225X5R1C106MT

(1) **Capacitor Supplier Verification**
Please verify availability of capacitors identified in this table. Capacitor suppliers may recommend alternative part numbers because of limited availability or obsolete products. In some instances, the capacitor product life cycle may be in decline and have short-term consideration for obsolescence.
RoHS, Lead-free and Material Details
Please consult capacitor suppliers regarding material composition, RoHS status, lead-free status, and manufacturing process requirements. Component designators or part number deviations can occur when material composition or soldering requirements are updated.
(2) N/R –Not recommended. The voltage rating does not meet the minimum operating limits.
(3) The voltage rating of this capacitor only allows it to be used for output voltages that are equal to or less than 5.1 V.
(4) Small ceramic capacitors may used to complement electrolytic types at the input to further reduce high-frequency ripple current.

Copyright © 2003–2008, Texas Instruments Incorporated

DESIGNING FOR VERY FAST LOAD TRANSIENTS

The transient response of the dc/dc converter has been characterized using a load transient with a di/dt of 1A/µs. The typical voltage deviation for this load transient is given in the specification table using the optional value of output capacitance. As the di/dt of a transient is increased, the response of a converter's regulation circuit ultimately depends on its output capacitor decoupling network. This is an inherent limitation with any dc/dc converter once the speed of the transient exceeds its bandwidth capability. If the target application specifies a higher di/dt or lower voltage deviation, the requirement can only be met with additional output capacitor decoupling. In these cases special attention must be paid to the type, value, and ESR of the capacitors selected. If the transient performance requirements exceed that specified in this data sheet, or the total amount of load capacitance is above 3,000 µF, the selection of output capacitors becomes more important.

FEATURES OF THE PTH FAMILY OF NON-ISOLATED WIDE OUTPUT ADJUST POWER MODULES

POLA™ COMPATIBILITY

The PTH/PTV family of nonisolated, wide-output adjustable power modules are optimized for applications that require a flexible, high performance module that is small in size. Each of these products are POLA™ compatible. POLA compatible products are produced by a number of manufacturers, and offer customers advanced, nonisolated modules with the same footprint and form factor. POLA parts are also assured to be interoperable, thereby providing customers with a second-source availability.

From the basic, *Just Plug it In* functionality of the 6-A modules, to the 30-A rated feature-rich PTHxx030, these products were designed to be very flexible, yet simple to use. The features vary with each product. Table 5 provides a quick reference to the features by product series and input bus voltage.

Table 5. Operating Features by Series and Input Bus Voltage

Series	Input Bus (V)	I_O(A)	Adjust (Trim)	On/Off Inhibit	Over-Current	Prebias Startup	Auto-Track™	Margin Up/Down	Output Sense	Thermal Shutdown
PTHxx050	3.3	6	•	•	•	•	•			
	5	6	•	•	•	•	•			
	12	6	•	•	•	•	•			
PTHxx060	3.3 / 5	10	•	•	•	•	•	•	•	
	12	10	•	•	•	•	•	•	•	
PTHxx010	3.3 / 5	15	•	•	•	•	•	•	•	
	12	12	•	•	•	•	•	•	•	
PTVxx010	5	8	•	•	•	•	•		•	
	12	8	•	•	•	•	•		•	•
PTHxx020	3.3 / 5	22	•	•	•	•	•	•	•	•
	12	18	•	•	•	•	•	•	•	•
PTHxx020	5	18	•	•	•	•	•		•	•
	12	16	•	•	•	•	•		•	•
PTHxx030	3.3 / 5	30	•	•	•	•	•	•	•	•
	12	26	•	•	•	•	•	•	•	•

For simple point-of-use applications, the PTH12050 (6 A) provides operating features such as an on/off inhibit, output voltage trim, prebias start-up and overcurrent protection. The PTH12060 (10 A), and PTH12010 (12 A) include an output voltage sense, and margin up/down controls. Then the higher output current, PTH12020 (18 A) and PTH12030 (26 A) products incorporate overtemperature shutdown protection.

The PTV12010 and PTV12020 are similar parts offered in a vertical, single in-line pin (SIP) profile, at slightly lower current ratings.

All of the products referenced in Table 5 include Auto-Track™. This feature was specifically designed to simplify the task of sequencing the supply voltages in a power system. This and other features are described in the following sections.

Copyright © 2003–2008, Texas Instruments Incorporated

SOFT-START POWER UP

The Auto-Track feature allows the power-up of multiple PTH modules to be directly controlled from the *Track* pin. However, in a stand-alone configuration, or when the Auto-Track feature is not being used, the *Track* pin should be directly connected to the input voltage, V_I, see Figure 11.

When the *Track* pin is connected to the input voltage the Auto-Track function is permanently disengaged. This allows the module to power up entirely under the control of its internal soft-start circuitry. When power up is under soft-start control, the output voltage rises to the set-point at a quicker and more linear rate.

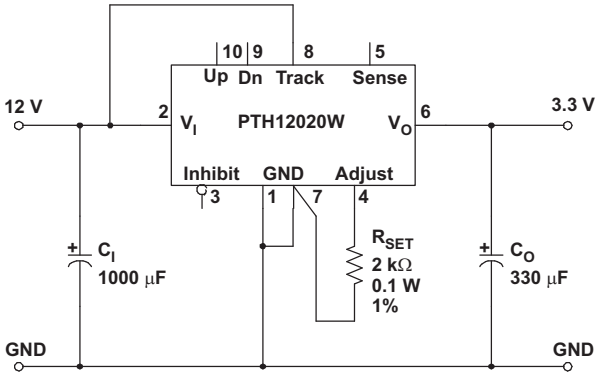

Figure 11. Power-Up Application Circuit

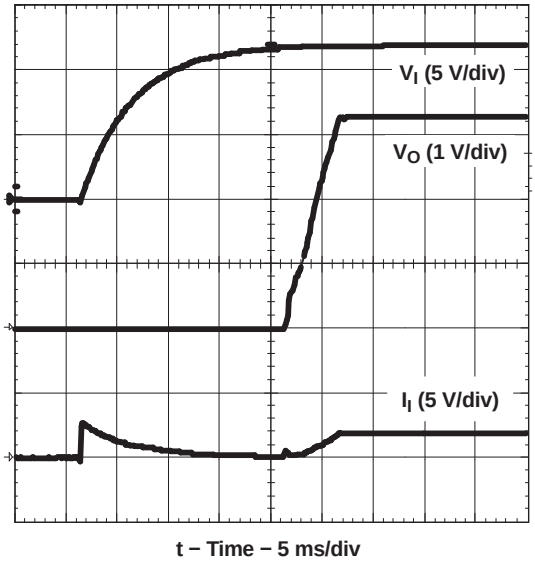

Figure 12. Power-Up Waveforms

From the moment a valid input voltage is applied, the soft-start control introduces a short time delay (typically 8 ms-15 ms) before allowing the output voltage to rise. The output then progressively rises to the module's setpoint voltage. Figure 12 shows the soft-start power-up characteristic of the 18-A output product (PTH12020W), operating from a 12-V input bus and configured for a 3.3-V output. The waveforms were measured with a 5-A resistive load and the Auto-Track feature disabled. The initial rise in input current when the input voltage first starts to rise is the charge current drawn by the input capacitors. Power-up is complete within 25 ms.

OVERCURRENT PROTECTION

For protection against load faults, all modules incorporate output overcurrent protection. Applying a load that exceeds the regulator's overcurrent threshold causes the regulated output to shut down. Following shutdown a module periodically attempts to recover by initiating a soft-start power-up. This is described as a *hiccup* mode of operation, whereby the module continues in a cycle of successive shutdown and power up until the load fault is removed. During this period, the average current flowing into the fault is significantly reduced. Once the fault is removed, the module automatically recovers and returns to normal operation.

OVERTEMPERATURE PROTECTION (OTP)

The PTH12020W and PTH12030W products have overtemperature protection. These products have an on-board temperature sensor that protects the module's internal circuitry against excessively high temperatures. A rise in the internal temperature may be the result of a drop in airflow, or a high ambient temperature. If the internal temperature exceeds the OTP threshold, the module's *Inhibit* control is internally pulled low. This turns the output off. The output voltage drops as the external output capacitors are discharged by the load circuit. The recovery is automatic, and begins with a soft-start power up. It occurs when the the sensed temperature decreases by about 10°C below the trip point.

Note: The overtemperature protection is a last resort mechanism to prevent thermal stress to the regulator. Operation at or close to the thermal shutdown temperature is not recommended and reduces the long-term reliability of the module. Always operate the regulator within the specified safe operating area (SOA) limits for the worst-case conditions of ambient temperature and airflow.

Copyright © 2003–2008, Texas Instruments Incorporated

OUTPUT ON/OFF INHIBIT

For applications requiring output voltage on/off control, each series of the PTH family incorporates an output *Inhibit* control pin. The inhibit feature can be used wherever there is a requirement for the output voltage from the regulator to be turned off.

The power modules function normally when the *Inhibit* pin is left open-circuit, providing a regulated output whenever a valid source voltage is connected to V_I with respect to GND.

Figure 13 shows the typical application of the inhibit function. Note the discrete transistor (Q1). The *Inhibit* input has its own internal pull-up to a potential of 5 V to 13.2 V (see footnotes to specification table). The input is not compatible with TTL logic devices. An open-collector (or open-drain) discrete transistor is recommended for control.

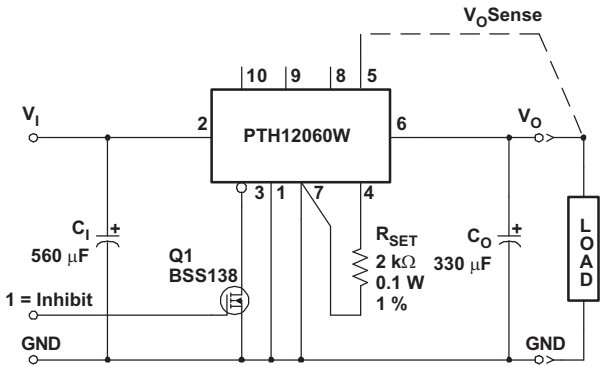

Figure 13. Inhibit Control Circuit

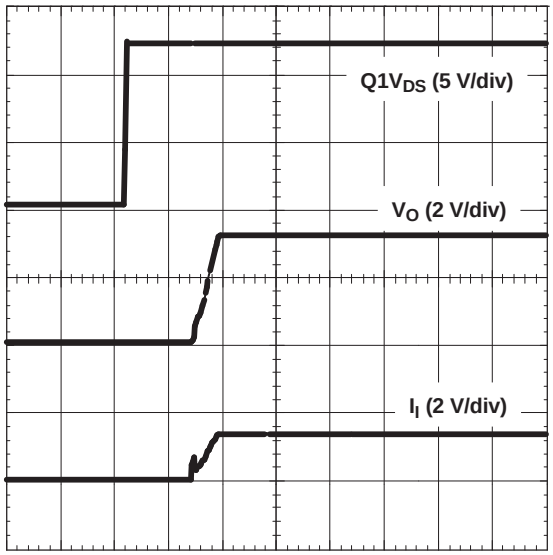

t – Time – 10 ms/div

Figure 14. Power-Up from Inhibit Control

Turning Q1 on applies a low voltage to the Inhibit control pin and disables the output of the module. If Q1 is then turned off, the module executes a soft-start power-up sequence. A regulated output voltage is produced within 25 ms Figure 14 shows the typical rise in both the output voltage and input current, following the turn-off of Q1. The turn off of Q1 corresponds to the rise in the waveform, Q1 V_{ds}. The waveforms were measured with a 5-A constant current load.

REMOTE SENSE

Products with this feature incorporate an output voltage sense pin, *V_O Sense*. A remote sense improves the load regulation performance of the module by allowing it to compensate for any *IR* voltage drop between its output and the load. An IR drop is caused by the high output current flowing through the small amount of pin and trace resistance.

To use this feature simply connect the *V_O Sense* pin to the V_O node, close to the load circuit (see standard application circuit). If a sense pin is left open-circuit, an internal low-value resistor (15-Ω or less) connected between the pin and and the output node, ensures the output remains in regulation.

With the sense pin connected, the difference between the voltage measured directly between the *V_O* and *GND* pins, and that measured from *V_O Sense* to GND, is the amount of IR drop being compensated by the regulator. This should be limited to a maximum of 0.3 V.

> *Note: The remote sense feature is not designed to compensate for the forward drop of nonlinear or frequency dependent components that may be placed in series with the converter output. Examples include OR-ing diodes, filter inductors, ferrite beads, and fuses. When these components are enclosed by the remote sense connection, they are effectively placed inside the regulation control loop, which can adversely affect the stability of the regulator.*

Copyright © 2003–2008, Texas Instruments Incorporated

Auto-Track™ Function

The Auto-Track function is unique to the PTH/PTV family, and is available with all POLA products. Auto-Track was designed to simplify the amount of circuitry required to make the output voltage from each module power up and power down in sequence. The sequencing of two or more supply voltages during power up is a common requirement for complex mixed-signal applications that use dual-voltage VLSI ICs such as the TMS320™ DSP family, microprocessors, and ASICs.

How Auto-Track™ Works

Auto-Track works by forcing the module output voltage to follow a voltage presented at the *Track* control pin (1). This control range is limited to between 0 V and the module set-point voltage. Once the track-pin voltage is raised above the set-point voltage, the module output remains at its set-point (2). As an example, if the *Track* pin of a 2.5-V regulator is at 1 V, the regulated output is 1 V. If the voltage at the *Track* pin rises to 3 V, the regulated output does not go higher than 2.5 V.

When under Auto-Track control, the regulated output from the module follows the voltage at its *Track* pin on a volt-for-volt basis. By connecting the *Track* pin of a number of these modules together, the output voltages follow a common signal during power up and power down. The control signal can be an externally generated master ramp waveform, or the output voltage from another power supply circuit (3). For convenience, the *Track* input incorporates an internal RC-charge circuit. This operates off the module input voltage to produce a suitable rising waveform at power up.

Typical Application

The basic implementation of Auto-Track allows for simultaneous voltage sequencing of a number of Auto-Track compliant modules. Connecting the *Track* inputs of two or more modules forces their track input to follow the same collective RC-ramp waveform, and allows their power-up sequence to be coordinated from a common Track control signal. This can be an open-collector (or open-drain) device, such as a power-up reset voltage supervisor IC. See U3 in Figure 15.

To coordinate a power-up sequence, the Track control must first be pulled to ground potential. This should be done at or before input power is applied to the modules. The ground signal should be maintained for at least 40 ms after input power has been applied. This brief period gives the modules time to complete their internal soft-start initialization (4), enabling them to produce an output voltage. A low-cost supply voltage supervisor IC, that includes a built-in time delay, is an ideal component for automatically controlling the Track inputs at power up.

Figure 15 shows how the TL7712A supply voltage supervisor IC (U3) can be used to coordinate the sequenced power up of two 12-V input Auto-Track modules. The output of the TL7712A supervisor becomes active above an input voltage of 3.6 V, enabling it to assert a ground signal to the common track control well before the input voltage has reached the module's undervoltage lockout threshold. The ground signal is maintained until approximately 43 ms after the input voltage has risen above U3's voltage threshold, which is 10.95 V. The 43-ms time period is controlled by the capacitor C3. The value of 3.3 µF provides sufficient time delay for the modules to complete their internal soft-start initialization. The output voltage of each module remains at zero until the track control voltage is allowed to rise. When U3 removes the ground signal, the track control voltage automatically rises. This causes the output voltage of each module to rise simultaneously with the other modules, until each reaches its respective set-point voltage.

Figure 17 shows the output voltage waveforms from the circuit of Figure 15 after input voltage is applied to the circuit. The waveforms, V_O1 and V_O2, represent the output voltages from the two power modules, U1 (3.3 V) and U2 (1.8 V), respectively. V_{TRK}, V_O1, and V_O2 are shown rising together to produce the desired simultaneous power-up characteristic.

The same circuit also provides a power-down sequence. When the input voltage falls below U3's voltage threshold, the ground signal is re-applied to the common track control. This pulls the track inputs to zero volts, forcing the output of each module to follow, as shown in Figure 17. In order for a simultaneous power-down to occur, the track inputs must be pulled low before the input voltage has fallen below the modules' undervoltage lockout. This is an important constraint. Once the modules recognize that a valid input voltage is no longer present, their outputs can no longer follow the voltage applied at their track input. During a power-down sequence, the fall in the output voltage from the modules is limited by the maximum output capacitance and the Auto-Track slew rate.

Copyright © 2003–2008, Texas Instruments Incorporated

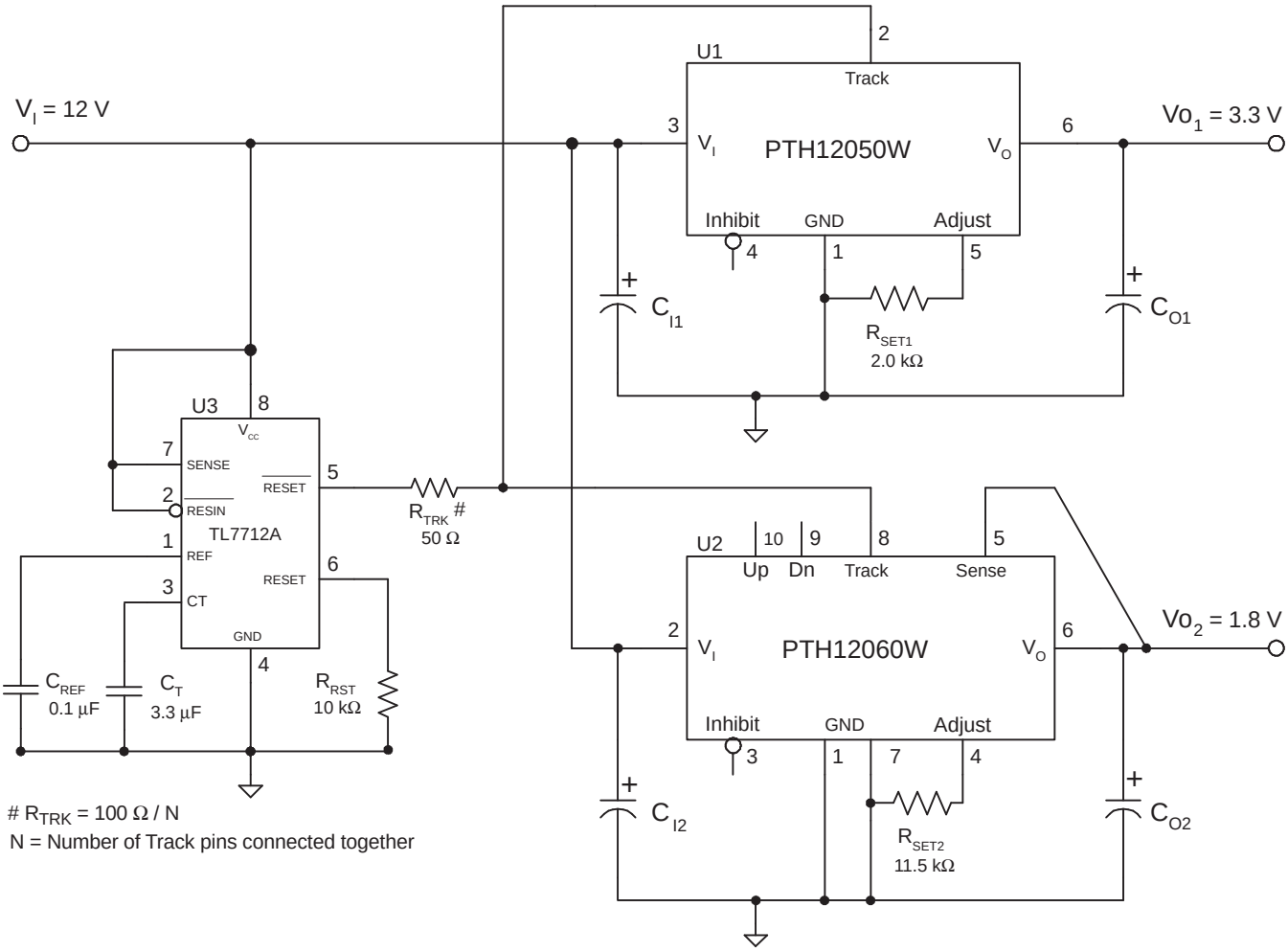

Figure 15. Sequenced Power Up and Power Down Using Auto-Track

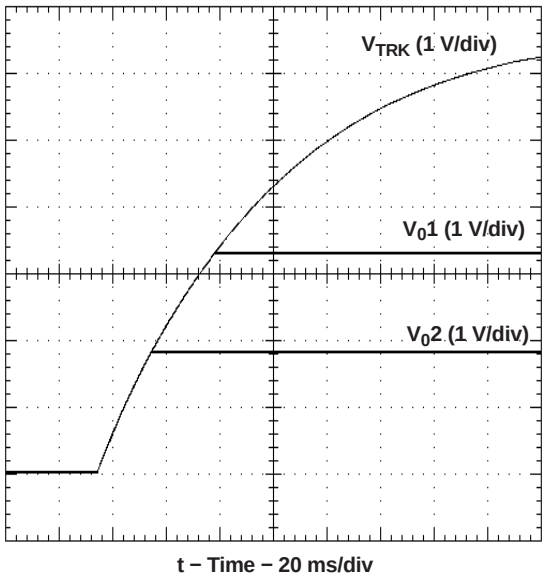

Figure 16. Simultaneous Power Up with Auto-Track Control

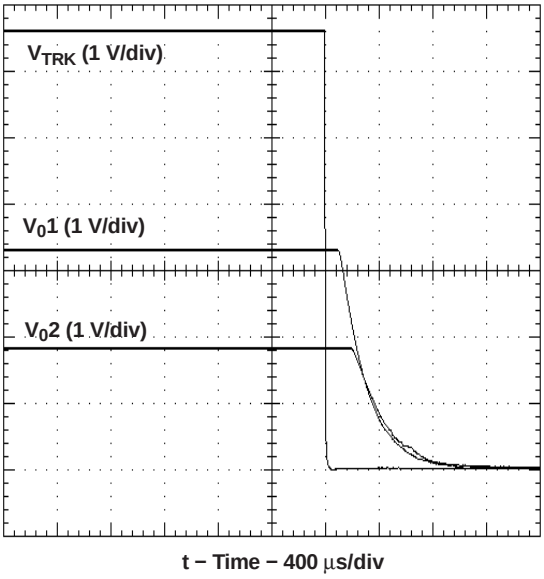

Figure 17. Simultaneous Power Down with Auto-Track Control

Copyright © 2003–2008, Texas Instruments Incorporated

Notes on Use of Auto-Track™

1. The *Track* pin voltage must be allowed to rise above the module set-point voltage before the module regulates at its adjusted set-point voltage.
2. The Auto-Track function tracks almost any voltage ramp during power up, and is compatible with ramp speeds of up to 1 V/ms.
3. The absolute maximum voltage that may be applied to the *Track* pin is the input voltage V_I.
4. The module cannot follow a voltage at its track control input until it has completed its soft-start initialization. This takes about 40 ms from the time that a valid voltage has been applied to its input. During this period, it is recommended that the *Track* pin be held at ground potential.
5. The Auto-Track function is disabled by connecting the *Track* pin to the input voltage (V_I). When Auto-Track is disabled, the output voltage rises at a quicker and more linear rate after input power has been applied.

PREBIAS STARTUP CAPABILITY

The capability to start up into an output prebias condition is now available to all the 12-V input, PTH series of power modules. (Note that this is a feature enhancement for the many of the W-suffix products).[1]

A prebias startup condition occurs as a result of an external voltage being present at the output of a power module prior to its output becoming active. This often occurs in complex digital systems when current from another power source is backfed through a dual-supply logic component, such as an FPGA or ASIC. Another path might be via clamp diodes, sometimes used as part of a dual-supply power-up sequencing arrangement. A prebias can cause problems with power modules that incorporate synchronous rectifiers. This is because under most operating conditions, such modules can sink as well as source output current. The 12-V input PTH modules all incorporate synchronous rectifiers, but will not sink current during startup, or whenever the *Inhibit* pin is held low. Startup includes an initial delay (approximately 8 ms–15 ms), followed by the rise of the output voltage under the control of the module's internal soft-start mechanism; see Figure 18.

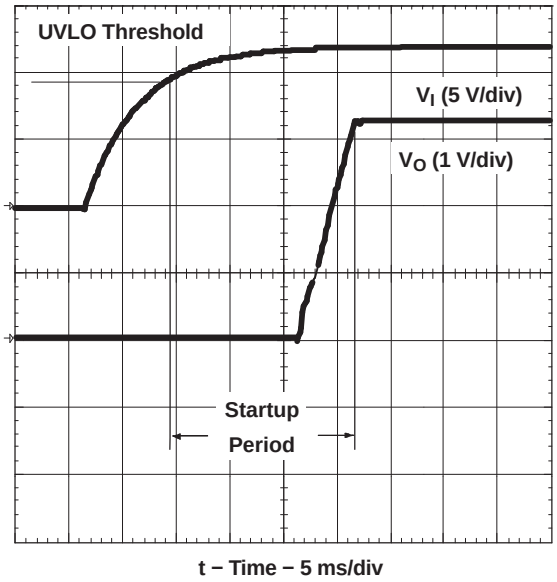

Figure 18. Startup Waveforms

CONDITIONS FOR PREBIAS HOLDOFF

In order for the module to allow an output prebias voltage to exist (and not sink current), certain conditions must be maintained. The module holds off a prebias voltage when the *Inhibit* pin is held low, and whenver the output is allowed to rise under soft-start control. Power up under soft-start control occurs upon the removal of the ground signal to the *Inhibit* pin (with input voltage applied), or when input power is applied with Auto-Track disabled.[2] To further ensure that the regulator doesn't sink output current, (even with a ground signal applied to its *Inhibit*), the input voltage must always be greater than the applied prebias source. This condition must exist throughout the power-up sequence.[3]

The soft-start period is complete when the output begins rising above the prebias voltage. Once it is complete, the module functions as normal, and sinks current if voltage higher than the nominal regulation value is applied to its output.

Note: If a prebias condition is not present, the soft-start period is complete when the output voltage has risen to either the set-point voltage, or the voltage applied at the module's Track control pin, whichever is lowest.

DEMONSTRATION CIRCUIT

Figure 19 shows the startup waveforms for the demonstration circuit shown in Figure 20. The initial rise in V_O2 is the prebias voltage, which is passed from the VCCIO to the VCORE voltage rail through the ASIC. Note that the output current from the PTH12010L module (I_O2) is negligible until its output voltage rises above the applied prebias.

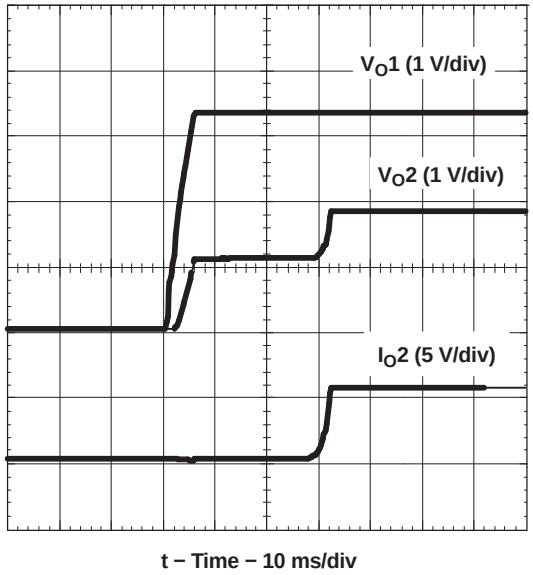

Figure 19. Prebias Startup Waveforms

NOTES

1. Output prebias holdoff is an inherent feature to all PTH120x0L and PTV120x0W/L modules. It has now been incorporated into all modules (including W-suffix modules with part numbers of the form PTH120x0W), with a production lot date code of *0423* or later.
2. The prebias start-up feature is not compatible with Auto-Track. If the rise in the output is limited by the voltage applied to the *Track* control pin, the output sinks current during the period that the track control voltage is below that of the back-feeding source. For this reason, it is recommended that Auto-Track be disabled when not being used. This is accomplished by connecting the *Track* pin to the input voltage, V_I. This raises the *Track* pin voltage well above the set-point voltage prior to the module's start up, thereby defeating the Auto-Track feature.
3. To further ensure that the regulator's output does not sink current when power is first applied (even with a ground signal applied to the *Inhibit* control pin), the input voltage ***must*** always be greater than the applied prebias source. This condition must exist ***throughout*** the power-up sequence of the power system.

Copyright © 2003–2008, Texas Instruments Incorporated

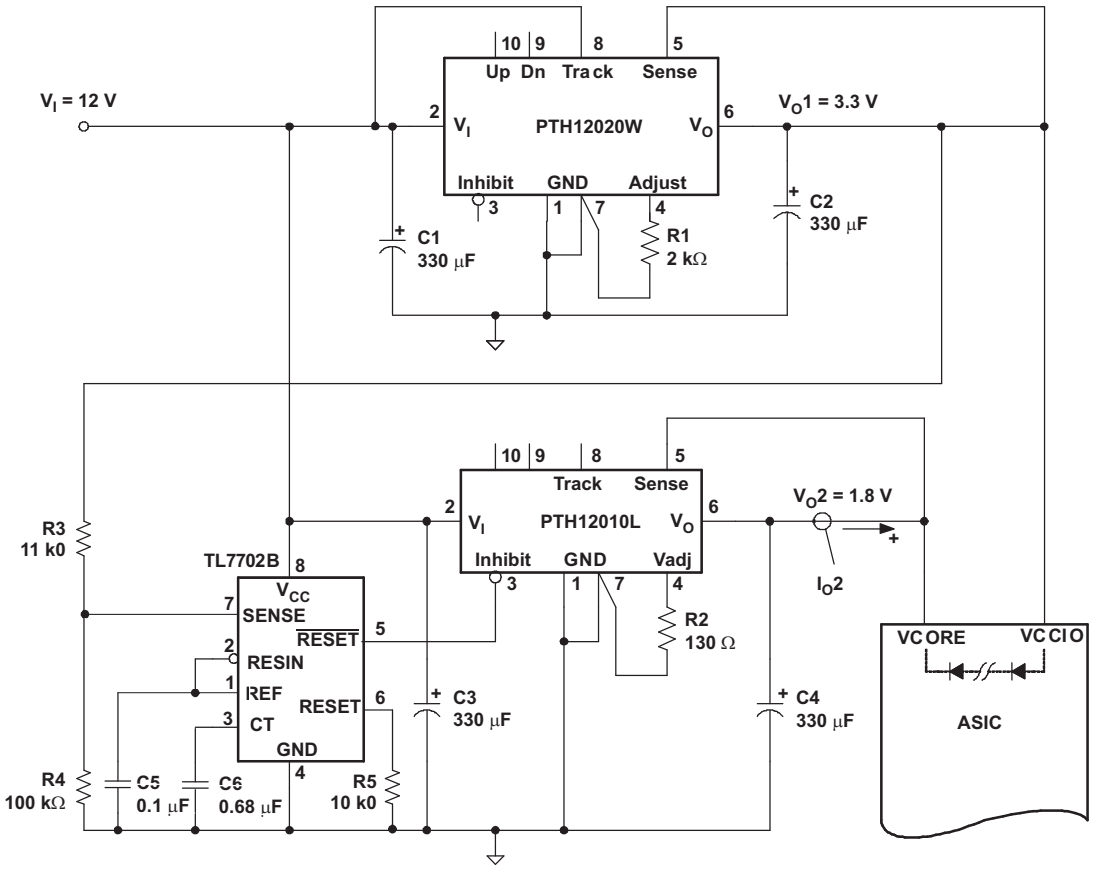

Figure 20. Application Circuit Demonstrating Prebias Startup

MARGIN UP/DOWN CONTROLS

The PTH12060, PTH12010, PTH12020, and PTH12030 products incorporate *Margin Up* and *Margin Down* control inputs. These controls allow the output voltage to be momentarily adjusted[1], either up or down, by a nominal 5%. This provides a convenient method for dynamically testing the operation of the load circuit over its supply margin or range. It can also be used to verify the function of supply voltage supervisors. The ±5% change is applied to the adjusted output voltage, as set by the external resistor, R_{SET} at the V_O Adjust pin.

The 5% adjustment is made by pulling the appropriate margin control input directly to the *GND* terminal.[2] A low-leakage open-drain device, such as an n-channel MOSFET or p-channel JFET is recommended for this purpose.[3] Adjustments of less than 5% can also be accommodated by adding series resistors to the control inputs. The value of the resistor can be selected from Table 6, or calculated using the following formula.

MARGIN UP/DOWN ADJUST RESISTANCE CALCULATION

To reduce the margin adjustment to a value less than 5%, series resistors are required (See R_D and R_U in Figure 21). For the same amount of adjustment, the resistor value calculated for R_U and R_D is the same. The formula is as follows.

$$R_U \text{ or } R_D = \frac{499}{\Delta\,\%} - 99.8\ \text{k}\Omega \tag{2}$$

Where Δ% = The desired amount of margin adjust in percent.

Table 6. Margin Up/Down Resistor Values

% ADJUST	R_U / R_D(kΩ)
5	0 k
4	24.9
3	66.5
2	150
1	397

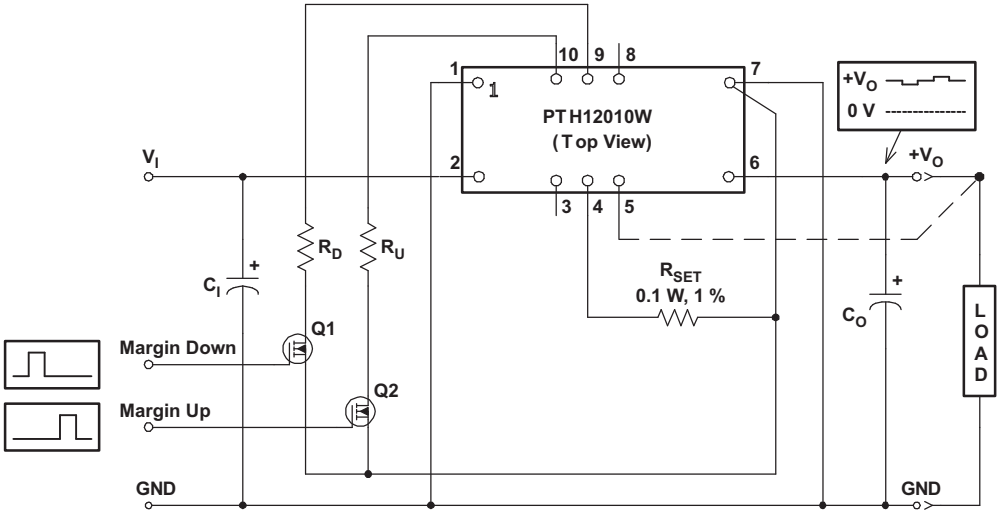

Figure 21. Margin Up/Down Application Schematic

MARGIN UP/DOWN NOTES

1. The *Margin Up* and *Margin Down* controls were not intended to be activated simultaneously. If they are their affects on the output voltage may not completely cancel, resulting in the possibility of a slightly higher error in the output voltage set point.
2. The ground reference should be a direct connection to the module *GND* at pin 7 (pin 1 for the PTHxx050). This will produce a more accurate adjustment at the load circuit terminals. The transistors Q1 and Q2 should be located close to the regulator.
3. The Margin Up and Margin Down control inputs are not compatible with devices that source voltage. This includes TTL logic. These are analog inputs and should only be controlled with a true open-drain device (preferably discrete MOSFET transistor). The device selected should have low off-state leakage current. Each input sources 8 µA when grounded, and has an open-circuit voltage of 0.8 V.

Copyright © 2003–2008, Texas Instruments Incorporated

TAPE AND REEL SPECIFICATIONS

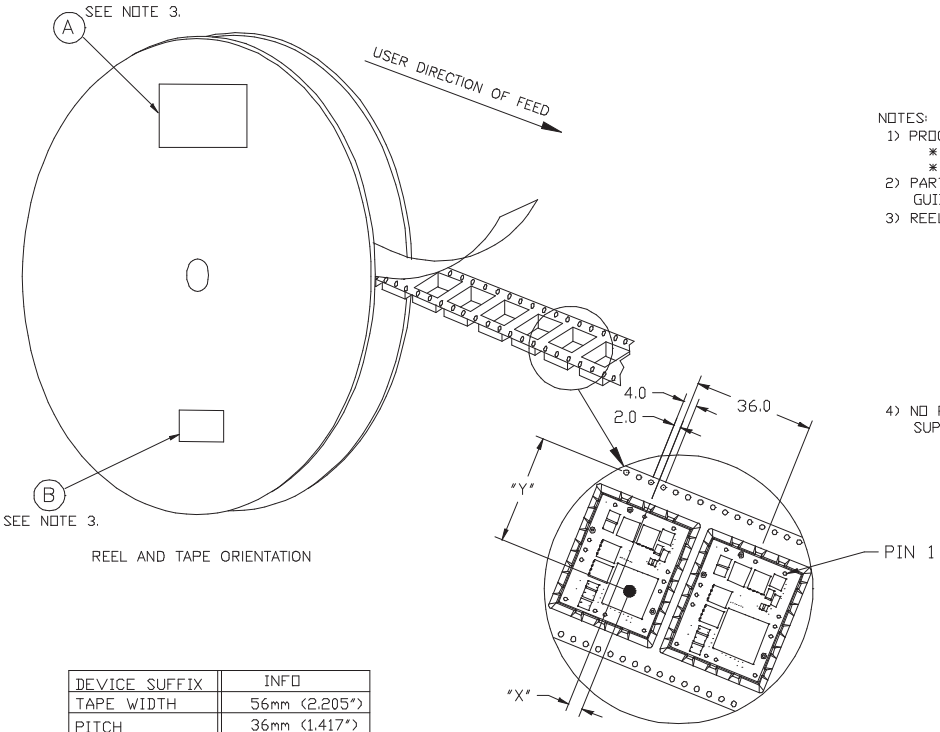

NOTES:
1) PROCESS IN ACCORDANCE WITH EIA-481-2
   * TAPE LEADER DIMENSION 15.30" MIN.
   * TAPE TRAILER DIMENSION 6.30" MIN.
2) PARTS SHOULD BE PACKAGED IN ACCORDANCE WITH ESD GUIDELINES IN EIA-541.
3) REEL LABEL: "A"- * TI PART NUMBER.
   * QUANTITY
   * DATE CODE
   * LOT NUMBER
   * MSL DATA
   * MADE IN
   * ASSY SITE ORIGIN
   * COUNTRY OF ORIGIN
   * SUPPLIER
   "B"- ANTI-STATIC CAUTION LABEL
4) NO REQUIREMENT FOR TAPE DIRECTION OF FEED FROM SUPPLIER REEL.

PTXXXX3X	"X"	"Y"
PTH03030/05030	4.2mm	32.8mm
PTH12030	-6.1mm	32.8mm

DEVICE SUFFIX	INFO
TAPE WIDTH	56mm (2.205")
PITCH	36mm (1.417")
REEL SIZE	15" DIA.
DEVICES/REEL	200

TRAY SPECIFICATIONS

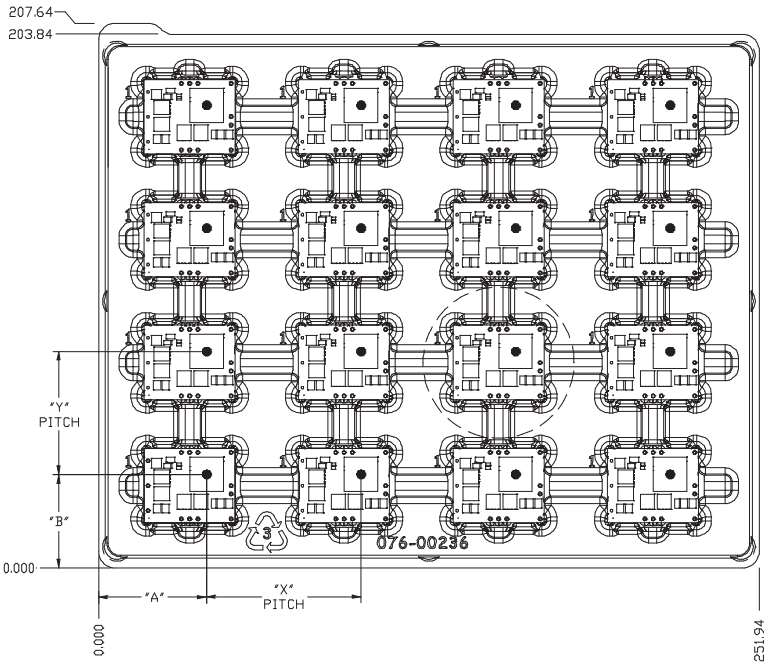

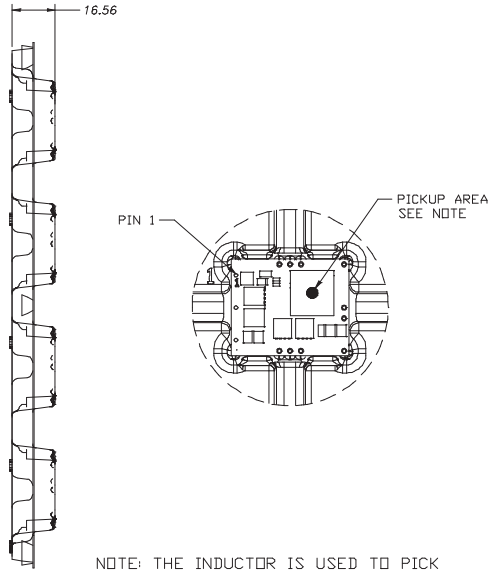

NOTE: THE INDUCTOR IS USED TO PICK AND PLACE THE MODULE. IT'S LOCATION MAY VARY FROM PACKAGE STYLE. SEE PRODUCT TABLE

PTXXXX3X	"A"	"B"	"X"	"Y"
PTH03030/05030	41.27	35.79	59.03	46.96
PTH12030	40.88	25.39		
ALL DIMENSIONS ARE IN MILLIMETER.				

DEVICES/TRAY	16

PACKAGING INFORMATION

Orderable Device	Status [1]	Package Type	Package Drawing	Pins	Package Qty	Eco Plan [2]	Lead/ Ball Finish	MSL Peak Temp [3]	Samples (Requires Login)
PTH12030LAH	ACTIVE	Through-Hole Module	EUM	13	16	Pb-Free (RoHS)	SN	N / A for Pkg Type	Request Free Samples
PTH12030LAS	ACTIVE	Surface Mount Module	EUN	13	16	TBD	SNPB	Level-1-235C-UNLIM/ Level-3-260C-168HRS	Request Free Samples
PTH12030LAST	ACTIVE	Surface Mount Module	EUN	13	200	TBD	SNPB	Level-1-235C-UNLIM/ Level-3-260C-168HRS	Purchase Samples
PTH12030LAZ	ACTIVE	Surface Mount Module	EUN	13	16	Pb-Free (RoHS)	SNAGCU	Level-3-260C-168 HR	Request Free Samples
PTH12030LAZT	ACTIVE	Surface Mount Module	EUN	13	200	Pb-Free (RoHS)	SNAGCU	Level-3-260C-168 HR	Purchase Samples
PTH12030WAD	ACTIVE	Through-Hole Module	EUM	13	16	Pb-Free (RoHS)	SN	N / A for Pkg Type	Purchase Samples
PTH12030WAH	ACTIVE	Through-Hole Module	EUM	13	16	Pb-Free (RoHS)	SN	N / A for Pkg Type	Request Free Samples
PTH12030WAS	ACTIVE	Surface Mount Module	EUN	13	16	TBD	SNPB	Level-1-235C-UNLIM/ Level-3-260C-168HRS	Request Free Samples
PTH12030WAST	ACTIVE	Surface Mount Module	EUN	13	200	TBD	SNPB	Level-1-235C-UNLIM/ Level-3-260C-168HRS	Purchase Samples
PTH12030WAZ	ACTIVE	Surface Mount Module	EUN	13	16	Pb-Free (RoHS)	SNAGCU	Level-3-260C-168 HR	Request Free Samples
PTH12030WAZT	ACTIVE	Surface Mount Module	EUN	13	200	Pb-Free (RoHS)	SNAGCU	Level-3-260C-168 HR	Purchase Samples

[1] The marketing status values are defined as follows:
ACTIVE: Product device recommended for new designs.
LIFEBUY: TI has announced that the device will be discontinued, and a lifetime-buy period is in effect.
NRND: Not recommended for new designs. Device is in production to support existing customers, but TI does not recommend using this part in a new design.
PREVIEW: Device has been announced but is not in production. Samples may or may not be available.
OBSOLETE: TI has discontinued the production of the device.

[2] Eco Plan - The planned eco-friendly classification: Pb-Free (RoHS), Pb-Free (RoHS Exempt), or Green (RoHS & no Sb/Br) - please check http://www.ti.com/productcontent for the latest availability information and additional product content details.
TBD: The Pb-Free/Green conversion plan has not been defined.
Pb-Free (RoHS): TI's terms "Lead-Free" or "Pb-Free" mean semiconductor products that are compatible with the current RoHS requirements for all 6 substances, including the requirement that lead not exceed 0.1% by weight in homogeneous materials. Where designed to be soldered at high temperatures, TI Pb-Free products are suitable for use in specified lead-free processes.

Pb-Free (RoHS Exempt): This component has a RoHS exemption for either 1) lead-based flip-chip solder bumps used between the die and package, or 2) lead-based die adhesive used between the die and leadframe. The component is otherwise considered Pb-Free (RoHS compatible) as defined above.
Green (RoHS & no Sb/Br): TI defines "Green" to mean Pb-Free (RoHS compatible), and free of Bromine (Br) and Antimony (Sb) based flame retardants (Br or Sb do not exceed 0.1% by weight in homogeneous material)

(3) MSL, Peak Temp. -- The Moisture Sensitivity Level rating according to the JEDEC industry standard classifications, and peak solder temperature.

Important Information and Disclaimer: The information provided on this page represents TI's knowledge and belief as of the date that it is provided. TI bases its knowledge and belief on information provided by third parties, and makes no representation or warranty as to the accuracy of such information. Efforts are underway to better integrate information from third parties. TI has taken and continues to take reasonable steps to provide representative and accurate information but may not have conducted destructive testing or chemical analysis on incoming materials and chemicals. TI and TI suppliers consider certain information to be proprietary, and thus CAS numbers and other limited information may not be available for release.

In no event shall TI's liability arising out of such information exceed the total purchase price of the TI part(s) at issue in this document sold by TI to Customer on an annual basis.

EUM (R–PDSS–T13) DOUBLE SIDED MODULE

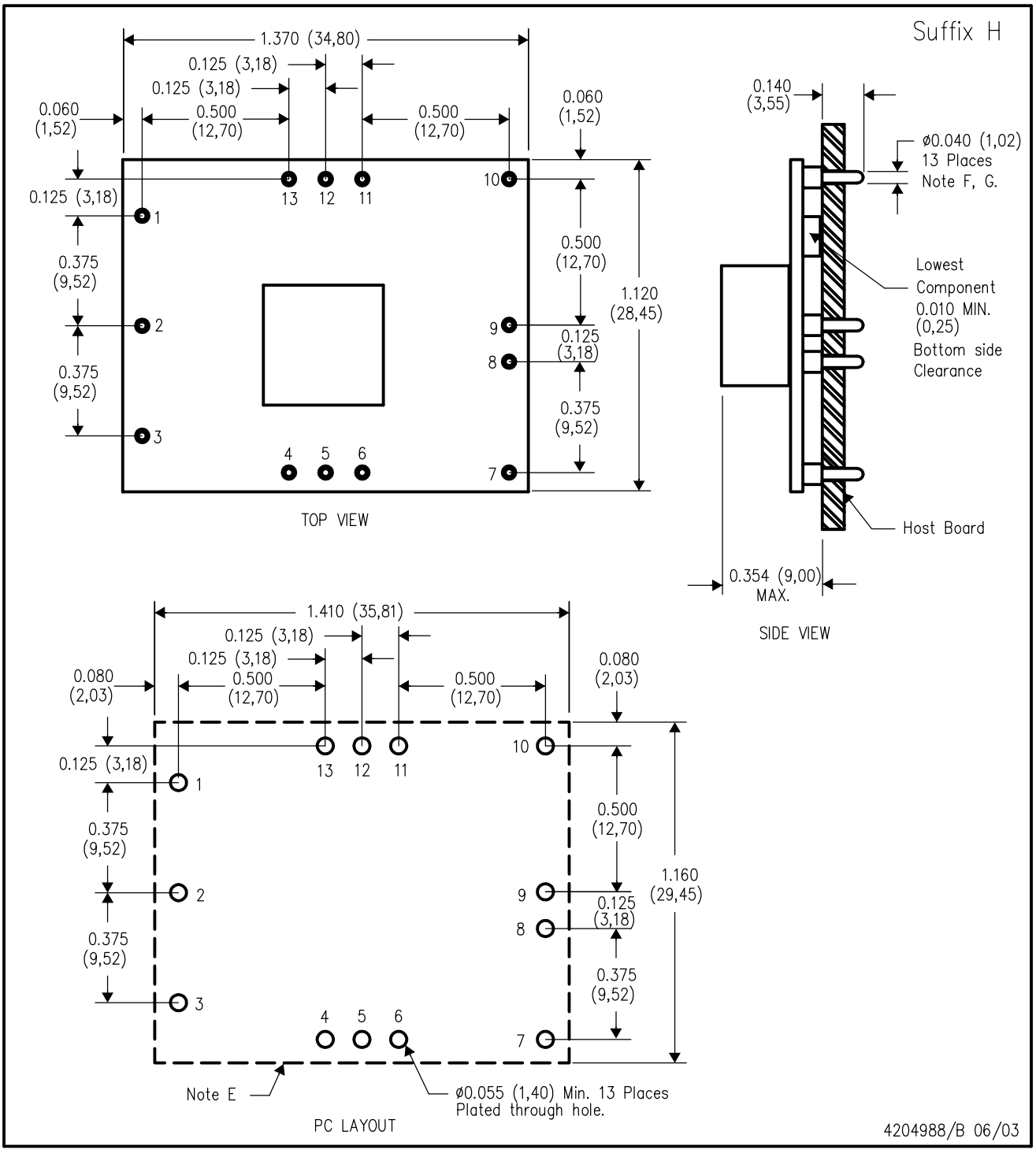

NOTES:
- A. All linear dimensions are in inches (mm).
- B. This drawing is subject to change without notice.
- C. 2 place decimals are ±0.030 (±0,76mm).
- D. 3 place decimals are ±0.010 (±0,25mm).
- E. Recommended keep out area for user components.
- F. Pins are 0.040" (1,02) diameter with 0.070" (1,78) diameter standoff shoulder.
- G. All pins: Material – Copper Alloy
  Finish – Tin (100%) over Nickel plate

EUN (R–PDSS–B13) DOUBLE SIDED MODULE

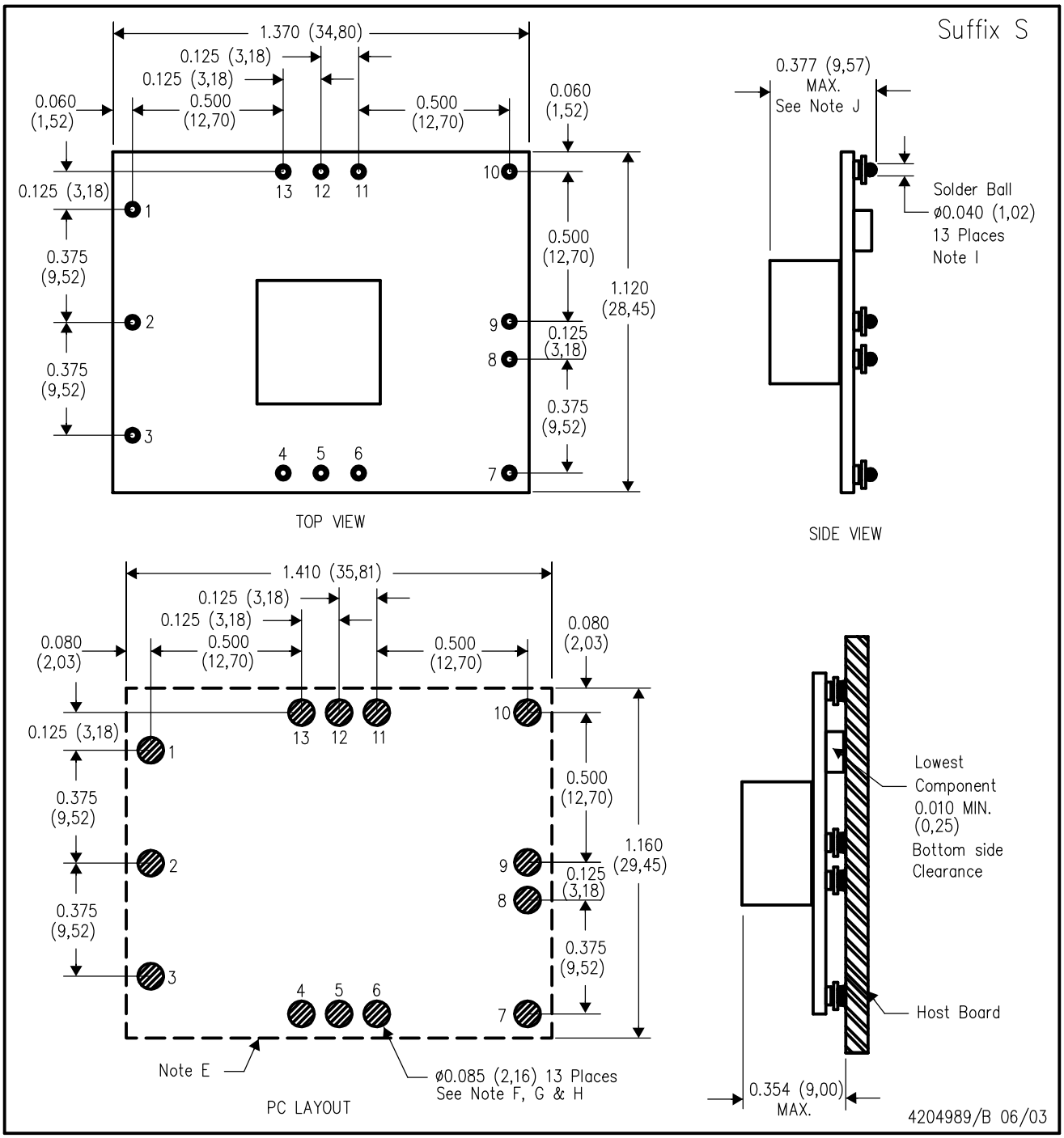

NOTES:
- A. All linear dimensions are in inches (mm).
- B. This drawing is subject to change without notice.
- C. 2 place decimals are ±0.030 (±0,76mm).
- D. 3 place decimals are ±0.010 (±0,25mm).
- E. Recommended keep out area for user components.
- F. Power pin connection should utilize two or more vias to the interior power plane of 0.025 (0,63) I.D. per input, ground and output pin (or the electrical equivalent).
- G. Paste screen opening: 0.080 (2,03) to 0.085 (2,16). Paste screen thickness: 0.006 (0,15).
- H. Pad type: Solder mask defined.
- I. All pins: Material – Copper Alloy
  Finish – Tin (100%) over Nickel plate
  Solder Ball – See product data sheet.
- J. Dimension prior to reflow solder.

IMPORTANT NOTICE

Texas Instruments Incorporated and its subsidiaries (TI) reserve the right to make corrections, modifications, enhancements, improvements, and other changes to its products and services at any time and to discontinue any product or service without notice. Customers should obtain the latest relevant information before placing orders and should verify that such information is current and complete. All products are sold subject to TI's terms and conditions of sale supplied at the time of order acknowledgment.

TI warrants performance of its hardware products to the specifications applicable at the time of sale in accordance with TI's standard warranty. Testing and other quality control techniques are used to the extent TI deems necessary to support this warranty. Except where mandated by government requirements, testing of all parameters of each product is not necessarily performed.

TI assumes no liability for applications assistance or customer product design. Customers are responsible for their products and applications using TI components. To minimize the risks associated with customer products and applications, customers should provide adequate design and operating safeguards.

TI does not warrant or represent that any license, either express or implied, is granted under any TI patent right, copyright, mask work right, or other TI intellectual property right relating to any combination, machine, or process in which TI products or services are used. Information published by TI regarding third-party products or services does not constitute a license from TI to use such products or services or a warranty or endorsement thereof. Use of such information may require a license from a third party under the patents or other intellectual property of the third party, or a license from TI under the patents or other intellectual property of TI.

Reproduction of TI information in TI data books or data sheets is permissible only if reproduction is without alteration and is accompanied by all associated warranties, conditions, limitations, and notices. Reproduction of this information with alteration is an unfair and deceptive business practice. TI is not responsible or liable for such altered documentation. Information of third parties may be subject to additional restrictions.

Resale of TI products or services with statements different from or beyond the parameters stated by TI for that product or service voids all express and any implied warranties for the associated TI product or service and is an unfair and deceptive business practice. TI is not responsible or liable for any such statements.

TI products are not authorized for use in safety-critical applications (such as life support) where a failure of the TI product would reasonably be expected to cause severe personal injury or death, unless officers of the parties have executed an agreement specifically governing such use. Buyers represent that they have all necessary expertise in the safety and regulatory ramifications of their applications, and acknowledge and agree that they are solely responsible for all legal, regulatory and safety-related requirements concerning their products and any use of TI products in such safety-critical applications, notwithstanding any applications-related information or support that may be provided by TI. Further, Buyers must fully indemnify TI and its representatives against any damages arising out of the use of TI products in such safety-critical applications.

TI products are neither designed nor intended for use in military/aerospace applications or environments unless the TI products are specifically designated by TI as military-grade or "enhanced plastic." Only products designated by TI as military-grade meet military specifications. Buyers acknowledge and agree that any such use of TI products which TI has not designated as military-grade is solely at the Buyer's risk, and that they are solely responsible for compliance with all legal and regulatory requirements in connection with such use.

TI products are neither designed nor intended for use in automotive applications or environments unless the specific TI products are designated by TI as compliant with ISO/TS 16949 requirements. Buyers acknowledge and agree that, if they use any non-designated products in automotive applications, TI will not be responsible for any failure to meet such requirements.

Following are URLs where you can obtain information on other Texas Instruments products and application solutions:

Products		**Applications**	
Amplifiers	amplifier.ti.com	Audio	www.ti.com/audio
Data Converters	dataconverter.ti.com	Automotive	www.ti.com/automotive
DLP® Products	www.dlp.com	Communications and Telecom	www.ti.com/communications
DSP	dsp.ti.com	Computers and Peripherals	www.ti.com/computers
Clocks and Timers	www.ti.com/clocks	Consumer Electronics	www.ti.com/consumer-apps
Interface	interface.ti.com	Energy	www.ti.com/energy
Logic	logic.ti.com	Industrial	www.ti.com/industrial
Power Mgmt	power.ti.com	Medical	www.ti.com/medical
Microcontrollers	microcontroller.ti.com	Security	www.ti.com/security
RFID	www.ti-rfid.com	Space, Avionics & Defense	www.ti.com/space-avionics-defense
RF/IF and ZigBee® Solutions	www.ti.com/lprf	Video and Imaging	www.ti.com/video
		Wireless	www.ti.com/wireless-apps

Mailing Address: Texas Instruments, Post Office Box 655303, Dallas, Texas 75265
Copyright © 2010, Texas Instruments Incorporated

ООО «ЛайфЭлектроникс» “LifeElectronics” LLC

ИНН 7805602321 КПП 780501001 Р/С 40702810122510004610 ФАКБ "АБСОЛЮТ БАНК" (ЗАО) в г.Санкт-Петербурге К/С 30101810900000000703 БИК 044030703

Компания «Life Electronics» занимается поставками электронных компонентов импортного и отечественного производства от производителей и со складов крупных дистрибьюторов Европы, Америки и Азии.

С конца 2013 года компания активно расширяет линейку поставок компонентов по направлению коаксиальный кабель, кварцевые генераторы и конденсаторы (керамические, пленочные, электролитические), за счёт заключения дистрибьюторских договоров

Мы предлагаем:

- *Конкурентоспособные цены и скидки постоянным клиентам.*
- *Специальные условия для постоянных клиентов.*
- *Подбор аналогов.*
- *Поставку компонентов в любых объемах, удовлетворяющих вашим потребностям.*

- *Приемлемые сроки поставки, возможна ускоренная поставка.*
- *Доставку товара в любую точку России и стран СНГ.*
- *Комплексную поставку.*
- *Работу по проектам и поставку образцов.*
- *Формирование склада под заказчика.*

- *Сертификаты соответствия на поставляемую продукцию (по желанию клиента).*
- *Тестирование поставляемой продукции.*
- *Поставку компонентов, требующих военную и космическую приемку.*
- *Входной контроль качества.*
- *Наличие сертификата ISO.*

В составе нашей компании организован Конструкторский отдел, призванный помогать разработчикам, и инженерам.

Конструкторский отдел помогает осуществить:

- *Регистрацию проекта у производителя компонентов.*
- *Техническую поддержку проекта.*
- *Защиту от снятия компонента с производства.*
- *Оценку стоимости проекта по компонентам.*
- *Изготовление тестовой платы монтаж и пусконаладочные работы.*

Тел: +7 (812) 336 43 04 (многоканальный)
Email: org@lifeelectronics.ru

www.lifeelectronics.ru