FAIRCHILD SEMICONDUCTOR®

August 2003

FDH15N50 / FDP15N50 / FDB15N50

15A, 500V, 0.38 Ohm, N-Channel SMPS Power MOSFET

Applications

Switch Mode Power Supplies(SMPS), such as

- PFC Boost
- Two-Switch Forward Converter
- Single Switch Forward Converter
- Flyback Converter
- Buck Converter
- High Speed Switching

Features

- Low Gate Charge Q_g results in Simple Drive Requirement
- Improved Gate, Avalanche and High Reapplied dv/dt Ruggedness
- Reduced $r_{DS(ON)}$
- Reduced Miller Capacitance and Low Input Capacitance
- Improved Switching Speed with Low EMI
- 175°C Rated Junction Temperature

Package

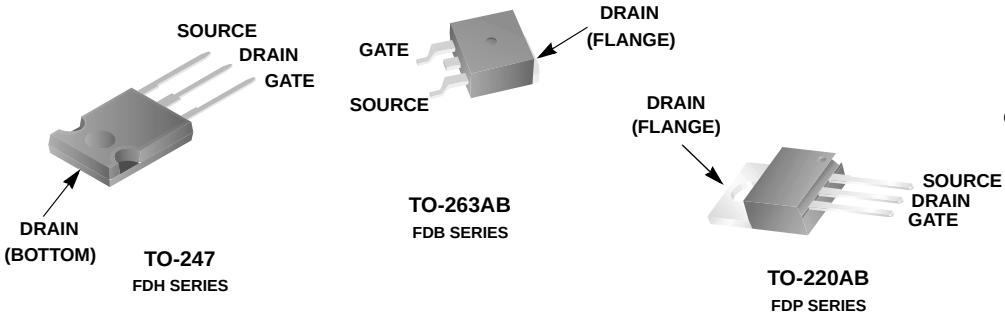

Symbol

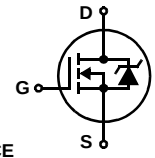

Absolute Maximum Ratings $T_C = 25^oC$ unless otherwise noted

Symbol	Parameter	Ratings	Units
V_{DSS}	Drain to Source Voltage	500	V
V_{GS}	Gate to Source Voltage	±30	V
I_D	Drain Current Continuous ($T_C = 25^oC$, $V_{GS} = 10V$)	15	A
	Continuous ($T_C = 100^oC$, $V_{GS} = 10V$)	11	A
	Pulsed[1]	60	A
P_D	Power dissipation Derate above 25^oC	300 2	W $W/^oC$
T_J, T_{STG}	Operating and Storage Temperature	-55 to 175	^oC
	Soldering Temperature for 10 seconds	300 (1.6mm from case)	^oC

Thermal Characteristics

$R_{\theta JC}$	Thermal Resistance Junction to Case	0.50	$^oC/W$
$R_{\theta JA}$	Thermal Resistance Junction to Ambient (TO-247)	40	$^oC/W$
$R_{\theta JA}$	Thermal Resistance Junction to Ambient (TO-220, TO-263)	62	$^oC/W$

©2003 Fairchild Semiconductor Corporation

Package Marking and Ordering Information

Device Marking	Device	Package	Reel Size	Tape Width	Quantity
FDH15N50	FDH15N50	TO-247	Tube	-	30
FDP15N50	FDP15N50	TO-220	Tube	-	50
FDB15N50	FDB15N50	TO-263	330mm	24mm	800

Electrical Characteristics T_J = 25°C (unless otherwise noted)

Symbol	Parameter	Test Conditions		Min	Typ	Max	Units
Statics							
B_{VDSS}	Drain to Source Breakdown Voltage	I_D = 250µA, V_{GS} = 0V		500	-	-	V
$\Delta B_{VDSS}/\Delta T_J$	Breakdown Voltage Temp. Coefficient	Reference to 25°C, ID = 1mA		-	0.58	-	V/°C
$r_{DS(ON)}$	Drain to Source On-Resistance	V_{GS} = 10V, I_D = 7.5A		-	0.33	0.38	Ω
$V_{GS(th)}$	Gate Threshold Voltage	V_{DS} = V_{GS}, I_D = 250µA		2.0	3.4	4.0	V
I_{DSS}	Zero Gate Voltage Drain Current	V_{DS} = 500V	T_C = 25°C	-	-	25	µA
		V_{GS} = 0V	T_C = 150°C	-	-	250	
I_{GSS}	Gate to Source Leakage Current	V_{GS} = ±30V		-	-	±100	nA
Dynamics							
g_{fs}	Forward Transconductance	V_{DD} = 10V, I_D = 7.5A		10	-	-	S
$Q_{g(TOT)}$	Total Gate Charge at 10V	V_{GS} = 10V, V_{DS} = 400V, I_D = 15A		-	33	41	nC
Q_{gs}	Gate to Source Gate Charge			-	7.2	10	nC
Q_{gd}	Gate to Drain “Miller” Charge			-	12	16	nC
$t_{d(ON)}$	Turn-On Delay Time	V_{DD} = 250V, I_D = 15A, R_G = 6.2Ω, R_D = 17Ω		-	9	-	ns
t_r	Rise Time			-	5.4	-	ns
$t_{d(OFF)}$	Turn-Off Delay Time			-	26	-	ns
t_f	Fall Time			-	5	-	ns
C_{ISS}	Input Capacitance	V_{DS} = 25V, V_{GS} = 0V, f = 1MHz		-	1850	-	pF
C_{OSS}	Output Capacitance			-	230	-	pF
C_{RSS}	Reverse Transfer Capacitance			-	16	-	pF
Avalanche Characteristics							
E_{AS}	Single Pulse Avalanche Energy[2]			760	-	-	mJ
I_{AR}	Avalanche Current			-	-	15	A
Drain-Source Diode Characteristics							
I_S	Continuous Source Current (Body Diode)	MOSFET symbol showing the integral reverse p-n junction diode. 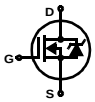		-	-	15	A
I_{SM}	Pulsed Source Current[1] (Body Diode)			-	-	60	A
V_{SD}	Source to Drain Diode Voltage	I_{SD} = 15A		-	0.86	1.2	V
t_{rr}	Reverse Recovery Time	I_{SD} = 15A, di_{SD}/dt = 100A/µs		-	470	730	ns
Q_{RR}	Reverse Recovered Charge	I_{SD} = 15A, di_{SD}/dt = 100A/µs		-	5	6.6	µC

Notes:
1: Repetitive rating; pulse width limited by maximum junction temperature
2: Starting T_J = 25°C, L = 7.0mH, I_{AS} = 15A

©2003 Fairchild Semiconductor Corporation

Typical Characteristics

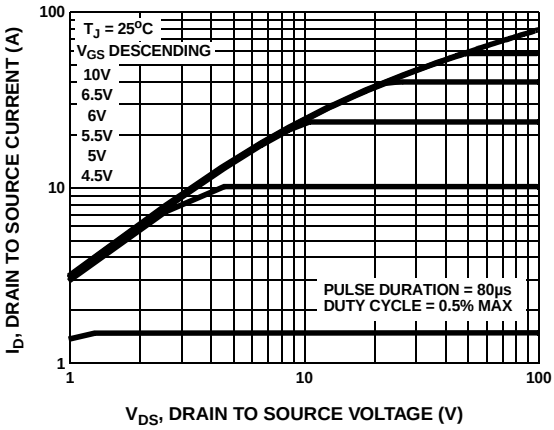

Figure 1. Output Characteristics

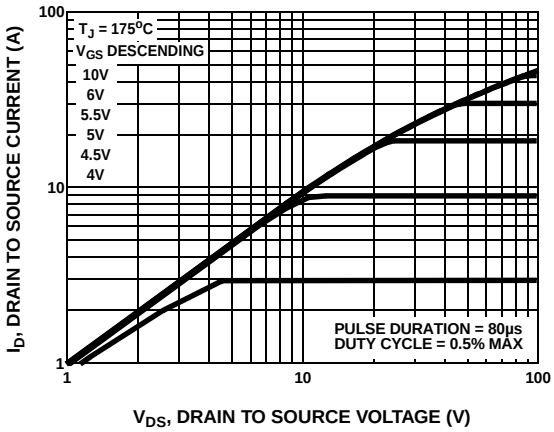

Figure 2. Output Characteristics

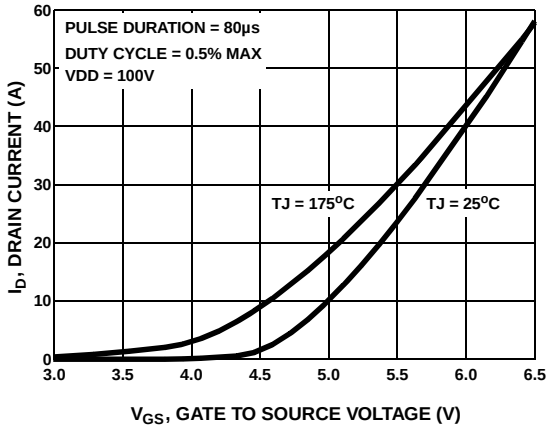

Figure 3. Transfer Characteristics

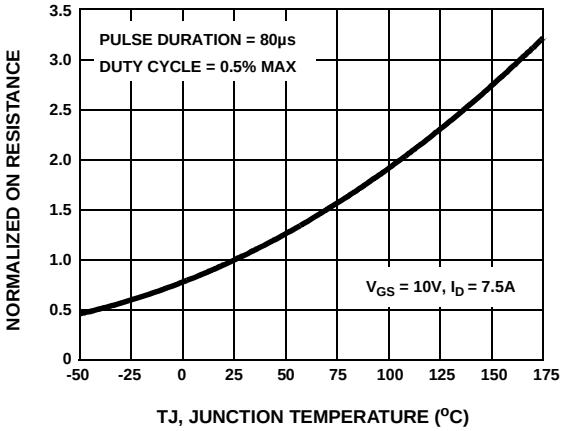

Figure 4. Normalized Drain To Source On Resistance vs Junction Temperature

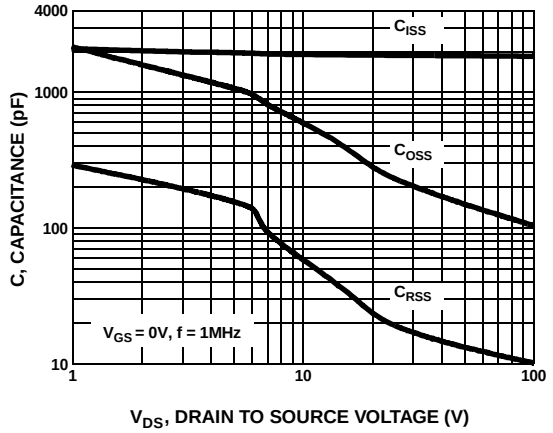

Figure 5. Capacitance vs Drain To Source Voltage

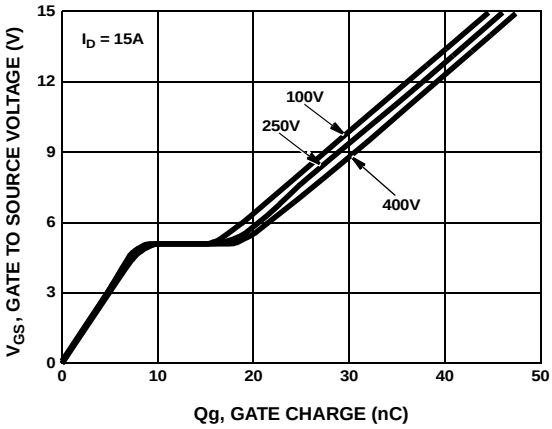

Figure 6. Gate Charge Waveforms For Constant Gate Current

©2003 Fairchild Semiconductor Corporation

Typical Characteristics

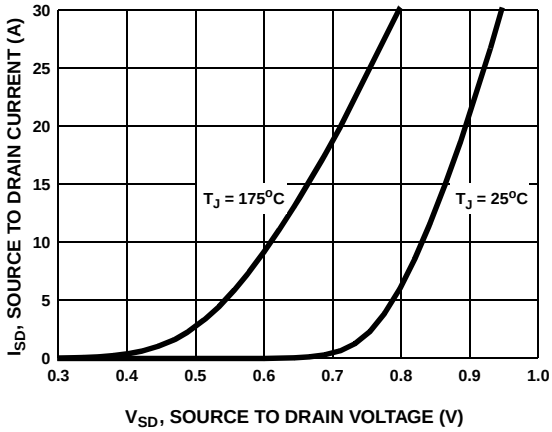

Figure 7. Body Diode Forward Voltage vs Body Diode Current

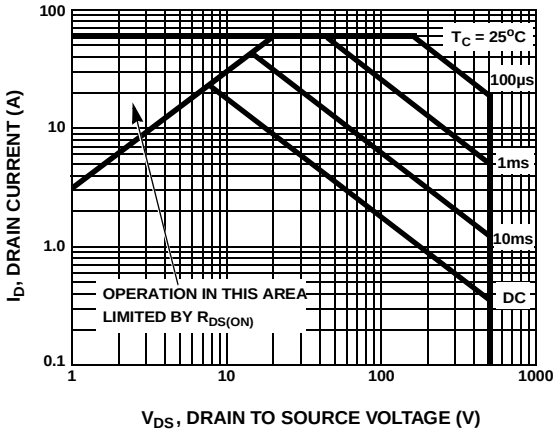

Figure 8. Maximum Safe Operating Area

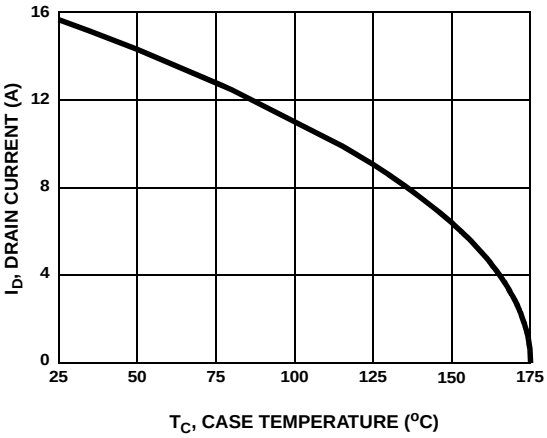

Figure 9. Maximum Drain Current vs Case Temperature

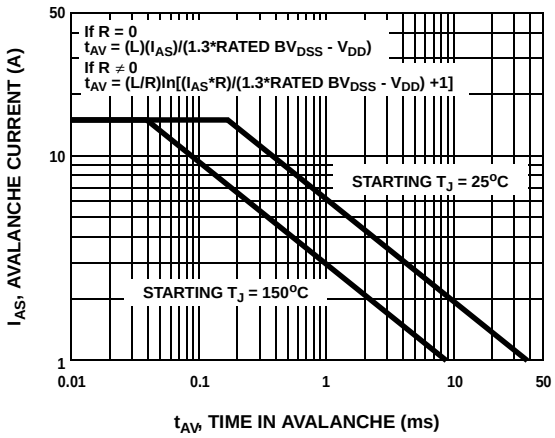

Figure 10. Unclamped Inductive Switching Capability

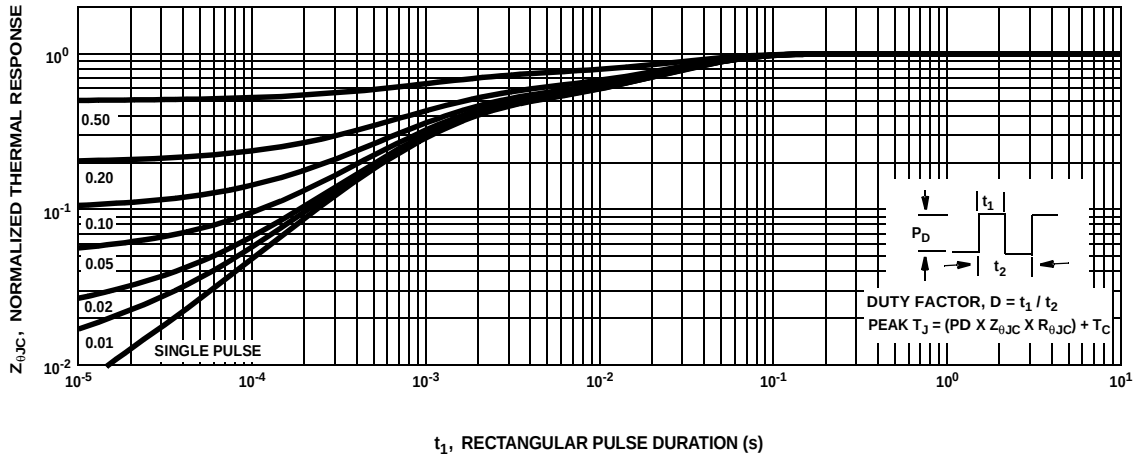

Figure 11. Normalized Transient Thermal Impedance, Junction to Case

Test Circuits and Waveforms

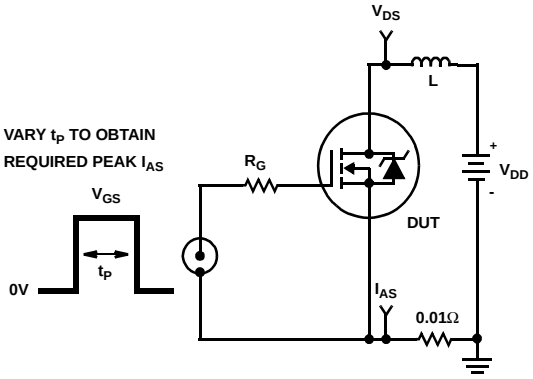

Figure 12. Unclamped Energy Test Circuit

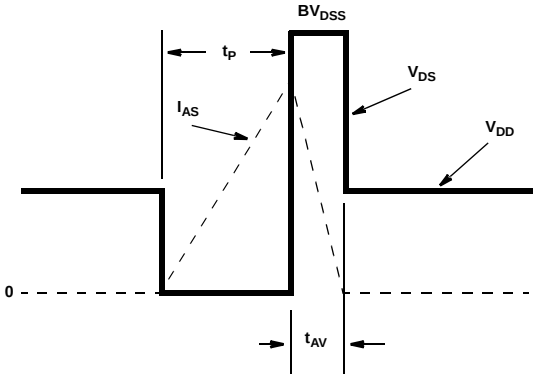

Figure 13. Unclamped Energy Waveforms

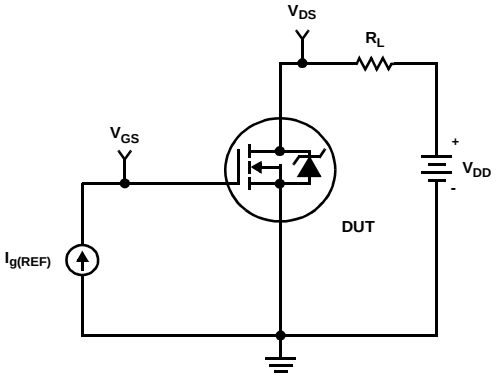

Figure 14. Gate Charge Test Circuit

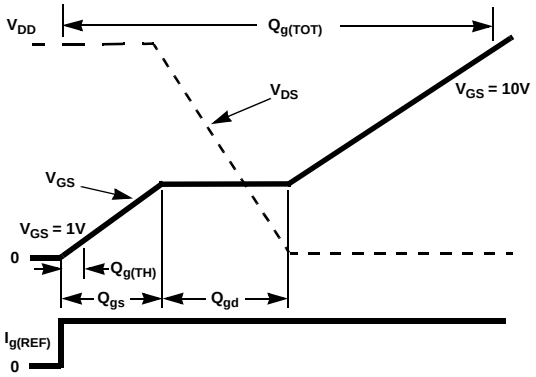

Figure 15. Gate Charge Waveforms

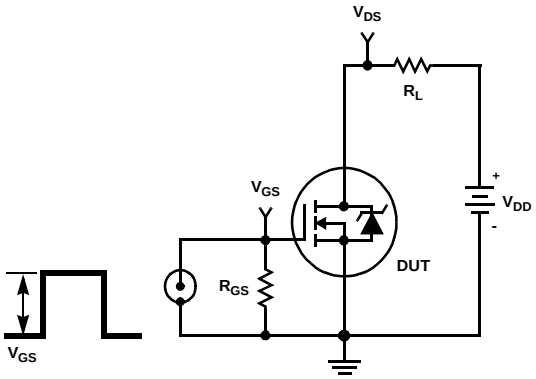

Figure 16. Switching Time Test Circuit

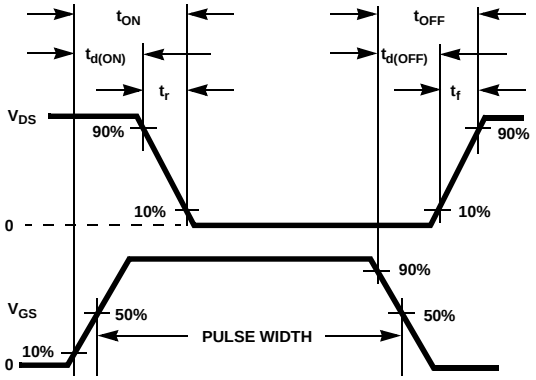

Figure 17. Switching Time Waveform

©2003 Fairchild Semiconductor Corporation

TRADEMARKS

The following are registered and unregistered trademarks Fairchild Semiconductor owns or is authorized to use and is not intended to be an exhaustive list of all such trademarks.

ACEx™	FACT™	ImpliedDisconnect™	PACMAN™	SPM™
ActiveArray™	FACT Quiet Series™	ISOPLANAR™	POP™	Stealth™
Bottomless™	FAST®	LittleFET™	Power247™	SuperSOT™-3
CoolFET™	FASTr™	MicroFET™	PowerTrench®	SuperSOT™-6
CROSSVOLT™	FRFET™	MicroPak™	QFET®	SuperSOT™-8
DOME™	GlobalOptoisolator™	MICROWIRE™	QS™	SyncFET™
EcoSPARK™	GTO™	MSX™	QT Optoelectronics™	TinyLogic®
E^2CMOS™	HiSeC™	MSXPro™	Quiet Series™	TruTranslation™
EnSigna™	I^2C™	OCX™	RapidConfigure™	UHC™
Across the board. Around the world.™		OCXPro™	RapidConnect™	UltraFET®
The Power Franchise™		OPTOLOGIC®	SILENT SWITCHER®	VCX™
Programmable Active Droop™		OPTOPLANAR™	SMART START™	

DISCLAIMER

FAIRCHILD SEMICONDUCTOR RESERVES THE RIGHT TO MAKE CHANGES WITHOUT FURTHER NOTICE TO ANY PRODUCTS HEREIN TO IMPROVE RELIABILITY, FUNCTION OR DESIGN. FAIRCHILD DOES NOT ASSUME ANY LIABILITY ARISING OUT OF THE APPLICATION OR USE OF ANY PRODUCT OR CIRCUIT DESCRIBED HEREIN; NEITHER DOES IT CONVEY ANY LICENSE UNDER ITS PATENT RIGHTS, NOR THE RIGHTS OF OTHERS.

LIFE SUPPORT POLICY

FAIRCHILD'S PRODUCTS ARE NOT AUTHORIZED FOR USE AS CRITICAL COMPONENTS IN LIFE SUPPORT DEVICES OR SYSTEMS WITHOUT THE EXPRESS WRITTEN APPROVAL OF FAIRCHILD SEMICONDUCTOR CORPORATION.

As used herein:

1. Life support devices or systems are devices or systems which, (a) are intended for surgical implant into the body, or (b) support or sustain life, or (c) whose failure to perform when properly used in accordance with instructions for use provided in the labeling, can be reasonably expected to result in significant injury to the user.

2. A critical component is any component of a life support device or system whose failure to perform can be reasonably expected to cause the failure of the life support device or system, or to affect its safety or effectiveness.

PRODUCT STATUS DEFINITIONS

Definition of Terms

Datasheet Identification	Product Status	Definition
Advance Information	Formative or In Design	This datasheet contains the design specifications for product development. Specifications may change in any manner without notice.
Preliminary	First Production	This datasheet contains preliminary data, and supplementary data will be published at a later date. Fairchild Semiconductor reserves the right to make changes at any time without notice in order to improve design.
No Identification Needed	Full Production	This datasheet contains final specifications. Fairchild Semiconductor reserves the right to make changes at any time without notice in order to improve design.
Obsolete	Not In Production	This datasheet contains specifications on a product that has been discontinued by Fairchild semiconductor. The datasheet is printed for reference information only.

ООО «ЛайфЭлектроникс» “LifeElectronics” LLC

ИНН 7805602321 КПП 780501001 Р/С 40702810122510004610 ФАКБ "АБСОЛЮТ БАНК" (ЗАО) в г.Санкт-Петербурге К/С 30101810900000000703 БИК 044030703

Компания «Life Electronics» занимается поставками электронных компонентов импортного и отечественного производства от производителей и со складов крупных дистрибьюторов Европы, Америки и Азии.

С конца 2013 года компания активно расширяет линейку поставок компонентов по направлению коаксиальный кабель, кварцевые генераторы и конденсаторы (керамические, пленочные, электролитические), за счёт заключения дистрибьюторских договоров

Мы предлагаем:

- *Конкурентоспособные цены и скидки постоянным клиентам.*
- *Специальные условия для постоянных клиентов.*
- *Подбор аналогов.*
- *Поставку компонентов в любых объемах, удовлетворяющих вашим потребностям.*

- *Приемлемые сроки поставки, возможна ускоренная поставка.*
- *Доставку товара в любую точку России и стран СНГ.*
- *Комплексную поставку.*
- *Работу по проектам и поставку образцов.*
- *Формирование склада под заказчика.*

- *Сертификаты соответствия на поставляемую продукцию (по желанию клиента).*
- *Тестирование поставляемой продукции.*
- *Поставку компонентов, требующих военную и космическую приемку.*
- *Входной контроль качества.*
- *Наличие сертификата ISO.*

В составе нашей компании организован Конструкторский отдел, призванный помогать разработчикам, и инженерам.

Конструкторский отдел помогает осуществить:

- *Регистрацию проекта у производителя компонентов.*
- *Техническую поддержку проекта.*
- *Защиту от снятия компонента с производства.*
- *Оценку стоимости проекта по компонентам.*
- *Изготовление тестовой платы монтаж и пусконаладочные работы.*

Тел: +7 (812) 336 43 04 (многоканальный)
Email: org@lifeelectronics.ru

www.lifeelectronics.ru