ICM7555/7556

General Purpose Timers

General Description

The Maxim ICM7555 and ICM7556 are respectively single and dual general purpose RC timers capable of generating accurate time delays or frequencies. The primary feature is an extremely low supply current, making this device ideal for battery-powered systems. Additional features include low THRESHOLD, TRIGGER, and RESET currents, a wide operating supply voltage range, and improved performance at high frequencies.

These CMOS low-power devices offer significant performance advantages over the standard 555 and 556 bipolar timers. Low-power consumption, combined with the virtually non-existent current spike during output transitions, make these timers the optimal solution in many applications.

Applications

Pulse Generator	Pulse Position Modulation
Precision Timing	Sequential Timing
Time Delay Generation	Missing Pulse Detector
Pulse Width Modulation	

Pin Configuration

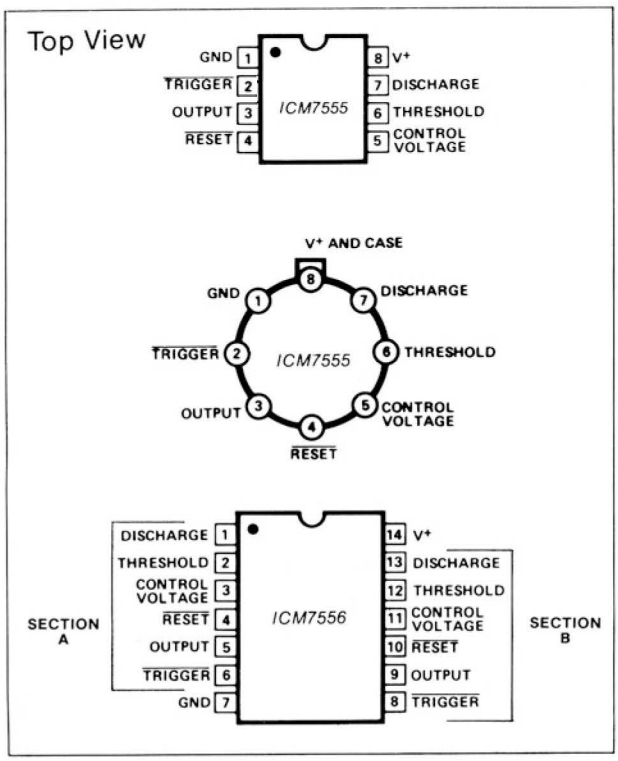

Features

- **Improved 2nd Source! (See 3rd page for "Maxim Advantage™").**
- **Wide Supply Voltage Range: 2-18V**
- **No Crowbarring of Supply During Output Transition**
- **Adjustable Duty Cycle**
- **Low THRESHOLD, TRIGGER and RESET Curents**
- **TTL Compatible**
- **Monolithic, Low Power CMOS Design**

Ordering Information

PART	TEMP. RANGE	PACKAGE
ICM7555IPA	-20°C to +85°C	8 Lead Plastic DIP
ICM7555IJA	-20°C to +85°C	8 Lead CERDIP
ICM7555ITV	-20°C to +85°C	TO-99 Can
ICM7555MJA	-55°C to +125°C	8 Lead CERDIP
ICM7555MTV	-55°C to +125°C	TO-99 Can
ICM7555ISA	-20°C to +85°C	8 Lead Small Outline
ICM7555/D	0°C to +70°C	Dice
ICM7556IPD	-20°C to +85°C	14 Lead Plastic DIP
ICM7556MJD	-55°C to +125°C	14 Lead CERDIP
ICM7556ISD	-20°C to +85°C	14 Lead Small Outline
ICM7556/D	0°C to +70°C	Dice

Typical Operating Circuit

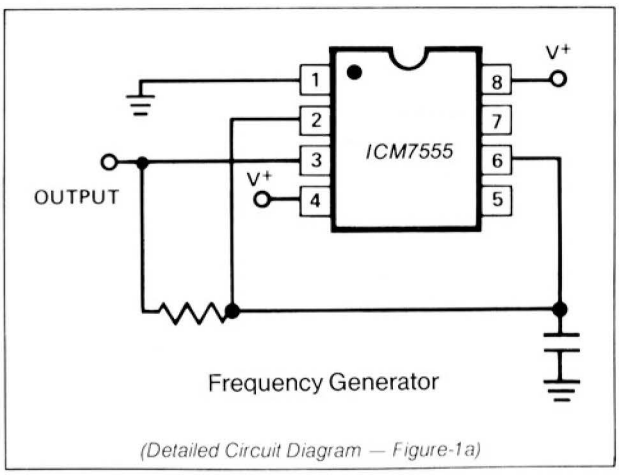

(Detailed Circuit Diagram — Figure-1a)

For pricing, delivery, and ordering information, please contact Maxim Direct at 1-888-629-4642, or visit Maxim's website at www.maximintegrated.com.

19-0481; Rev 2; 11/92

ICM7555/7556

General Purpose Timers

ABSOLUTE MAXIMUM RATINGS (Note 1)

Supply Voltage ..... +18 Volts
Input Voltage $\overline{\text{TRIGGER}}$
Control Voltage $\overline{\text{THRESHOLD}}$ $<V^+ + 0.3V$ to $\geq -0.3V$
$\overline{\text{RESET}}$

Output Current 100mA
Power Dissipation[2] ICM7556 ..... 300mW
ICM7555 ..... 200mW
Operating Temperature Range
ICM7555IJA (Maxim) ..... −20°C to +85°C
ICM7555ISA (Maxim) ..... −20°C to +85°C
ICM7555IPA ..... −20°C to +85°C
ICM7555ITV ..... −20°C to +85°C
ICM7556IPD ..... −20°C to +85°C
ICM7555MTV ..... −55°C to +125°C
ICM7556MJD ..... −55°C to +125°C
Storage Temperature ..... −65°C to +150°C
Lead Temperature (Soldering 60 Seconds) ..... +300°C

Stresses above those listed under Absolute Maximum Ratings may cause permanent damage to the device. These are stress ratings only and functional operation of the device at these or any other conditions above those indicated in the operational sections of the specifications is not implied. Exposure to absolute maximum rating conditions for extended periods may affect device reliability.

ELECTRICAL CHARACTERISTICS

($V^+ = +2$ to $+15$ volts; $T_A = 25°C$, Unless Noted)

PARAMETER	SYMBOL	TEST CONDITIONS			VALUE MIN	VALUE TYP	VALUE MAX	UNITS
Supply Voltage	V^+	−20°C ≤ T_A ≤ +70°C			2		18	V
		−55°C ≤ T_A ≤ +125°C			3		16	V
Supply Current[3]	I^+	ICM7555	$V^+ = 2V$			60	200	μA
			$V^+ = 18V$			120	300	μA
		ICM7556	$V^+ = 2V$			120	400	μA
			$V^+ = 18V$			240	600	μA
Timing Error		R_A, R_B = 1k to 100k, C = 0.1μF	5V ≤ V^+ ≤ 15V					
Initial Accuracy		Note 4				2.0	5.0	%
Drift with Temperature		Note 4	$V^+ = 5V$			50		ppm/°C
			$V^+ = 10V$			75		
			$V^+ = 15V$			100		
Drift with Supply Voltage		$V^+ = 5V$				1.0	3.0	%/V
Threshold Voltage	V_{TH}		$V^+ = 5V$		0.63	0.66	0.67	V^+
Trigger Voltage	V_{TRIG}		$V^+ = 5V$		0.29	0.33	0.34	V^+
Trigger Current	I_{TRIG}	$V^+ = 18V$				50		pA
		$V^+ = 5V$				10		pA
		$V^+ = 2V$				1		pA
Threshold Current	I_{TH}	$V^+ = 18V$				50		pA
		$V^+ = 5V$				10		pA
		$V^+ = 2V$				1		pA
Reset Current	I_{RST}	V_{RESET} = Ground	$V^+ = 18V$			100		pA
			$V^+ = 5V$			20		pA
			$V^+ = 2V$			2		pA
Reset Voltage	V_{RST}	$V^+ = 18V$			0.4	0.7	1.0	V
		$V^+ = 2V$			0.4	0.7	1.0	V
Control Voltage Lead	V_{CV}		$V^+ = 5V$		0.62	0.66	0.67	V^+
Output Voltage Drop	V_O	Output Lo	$V^+ = 18V$	$I_{SINK} = 3.2mA$		0.1	0.4	V
			$V^+ = 5V$	$I_{SINK} = 3.2mA$		0.15	0.4	V
		Output Hi	$V^+ = 18V$	$I_{SOURCE} = 1.0mA$	17.25	17.8		V
			$V^+ = 5V$	$I_{SOURCE} = 1.0mA$	4.0	4.5		V
Rise Time of Output	t_r	$R_L = 10M\Omega$	$C_L = 10pF$	$V^+ = 5V$	35	40	75	ns
Fall Time of Output	t_f	$R_L = 10M\Omega$	$C_L = 10pF$	$V^+ = 5V$	35	40	75	ns
Guaranteed Max Osc Freq	f_{max}	Astable Operation			500			kHz

Original Manufacturer's Electrical Characteristics Provided for Comparative Purposes

Note 1: Due to the SCR structure inherent in the CMOS process used to fabricate these devices, connecting any terminal to a voltage greater than $V^+ + 0.3V$ or less than $V^- - 0.3V$ may cause destructive latchup. For this reason it is recommended that no inputs from external sources not operating from the same power supply be applied to the device before its power supply is established. In multiple systems, the supply of the ICM7555/6 must be turned on first.

Note 2: Junction temperatures should not exceed 135°C and the power dissipation must be limited to 20mW at 125°C. Below 125°C power dissipation may be increased to 300mW at 25°C. Derating factor is approximately 3mW/°C (7556) or 2mW/°C (7555).

Note 3: The supply current value is essentially independent of the $\overline{\text{TRIGGER}}$, THRESHOLD and $\overline{\text{RESET}}$ voltages.

Note 4: Parameter is not 100% tested. Majority of all units meet this specification.

The electrical characteristics above are a reproduction of a portion of Intersil's copyrighted (1983/1984) data book. This information does not constitute any representation by Maxim that Intersil's products will perform in accordance with these specifications. The "Electrical Characteristics Table" along with the descriptive excerpts from the original manufacturer's data sheet have been included in this data sheet solely for comparative purposes.

- Lower Supply Current
- Increased Output Source Current
- Guaranteed THRESHOLD, $\overline{\text{TRIGGER}}$ and $\overline{\text{RESET}}$ Input Currents
- Guaranteed Discharge Output Voltage
- Supply Current Guaranteed Over Temperature
- Significantly Improved ESD Protection (Note 6)
- Maxim Quality and Reliability

ABSOLUTE MAXIMUM RATINGS This device conforms to the Absolute Maximum Ratings on adjacent page.

ELECTRICAL CHARACTERISTICS Specifications below satisfy or exceed all "tested" parameters on adjacent page.
($V^+ = +2$ to $+15$ volts; $T_A = 25°C$, unless noted.)

PARAMETER	SYMBOL	TEST CONDITIONS	MIN	TYP	MAX	UNITS
Supply Voltage	V^+	$-20°C \le T_A \le +85°C$ $-55°C \le T_A \le +125°C$	2 3		16.5 16	V V
Supply Current (Note 3)	I^+	**ICM 7555** $V^+ = 2\text{-}16.5V$; $T_A = +25°C$ $V^+ = 5V$; $T_A = +25°C$ $V^+ = 5V$; $-20°C \le T_A \le +85°C$ $V^+ = 5V$; $-55°C \le T_A \le +125°C$ **ICM 7556** $V^+ = 2\text{-}16.5V$; $T_A = +25°C$ $V^+ = 5V$; $T_A = +25°C$ $V^+ = 5V$; $-20°C \le T_A \le +85°C$ $V^+ = 5V$; $-55°C \le T_A \le +125°C$		30 60	250 120 250 300 500 240 500 600	μA μA μA μA μA μA μA μA
Timing Error (Note 4)		Circuit of figure 1(b); $R_A = R_B = 100k\Omega$, $C = 0.1\mu F$, $V^+ = 5V$				
Initial Accuracy (Note 5)				2.0	5.0	%
Drift with Temperature		$V^+ = 5V$ $V^+ = 10V$ $V^+ = 15V$		50 75 100		ppm/°C ppm/°C ppm/°C
Drift with Supply Voltage		$V^+ = 5V$		1.0	3.0	%/V
Threshold Voltage	V_{TH}	$V^+ = 5V$	0.63	0.66	0.67	V^+
Trigger Voltage	V_{TRIG}	$V^+ = 5V$	0.29	0.33	0.34	V^+
Trigger Current	I_{TRIG}	$V^+ = 16.5V$ $V^+ = 5V$ $V^+ = 2V$		50 10 1		pA pA pA
Threshold Current	I_{TH}	$V^+ = 16.5V$ $V^+ = 5V$ $V^+ = 2V$		50 10 1		pA pA pA
Reset Current	I_{RST}	V_{RESET} = Ground $V^+ = 16.5V$ $V^+ = 5V$ $V^+ = 2V$		100 20 2		pA pA pA
Reset Voltage	V_{RST}	$V^+ = 16.5V$ $V^+ = 2V$	0.4 0.4	0.7 0.7	1.2 1.2	V V
Control Voltage	V_{CV}	$V^+ = 5V$	0.62	0.66	0.67	V^+
Output Voltage Drop	V_O	Output Lo $V^+ = 16.5V$ $I_{SINK} = 3.2mA$ $V^+ = 5V$ $I_{SINK} = 3.2mA$ **Output Hi** $V^+ = 16.5V$ $I_{SOURCE} = 2.0mA$ $V^+ = 5V$ $I_{SOURCE} = 2.0mA$	 15.75 4.0	0.1 0.15 16.25 4.5	0.4 0.4	V V V V
Discharge Output Voltage	V_{DIS}	$V^+ = 5V$, $I_{DIS} = 3.2mA$		0.1	0.4	V
Rise Time of Output (Note 4)	t_r	$R_L = 10M\Omega$ $C_L = 10pF$ $V^+ = 5V$	35	40	75	ns
Fall Time of Output (Note 4)	t_f	$R_L = 10M\Omega$ $C_L = 10pF$ $V^+ = 5V$	35	40	75	ns
Guaranteed Max Osc. Freq. (Note 4)	f_{max}	Astable Operation	500			kHz

Note 1: Due to the SCR structure inherent in the CMOS process used to fabricate these devices, connecting any terminal to a voltage greater than $V^+ + 0.3V$ or less than $V^- - 0.3V$ may cause destructive latchup. For this reason it is recommended that no inputs from external sources not operating from the same power supply be applied to the device before its power supply is established. In multiple systems, the supply of the ICM7555/6 must be turned on first.

Note 2: Junction temperatures should not exceed 135°C and the power dissipation must be limited to 20mW at 125°C. Below 125°C power dissipation may be increased to 300mW at 25°C. Derating factor is approximately 3mW/°C (7556) or 2mW/°C (7555).

Note 3: The supply current value is essentially independent of the $\overline{\text{TRIGGER}}$, THRESHOLD AND $\overline{\text{RESET}}$ voltages.

Note 4: Parameter is not 100% tested. Majority of all units meet this specification.

Note 5: Deviation from $f = 1.46/(R_A + 2R_B)C$, $V^+ = 5V$.

Note 6: All pins are designed to withstand electrostatic discharge (ESD) levels in excess of 2000V. (Mil Std 883B, Method 3015.1 Test Circuit.)

Typical Operating Characteristics

DISCHARGE OUTPUT CURRENT AS A FUNCTION OF DISCHARGE OUTPUT VOLTAGE

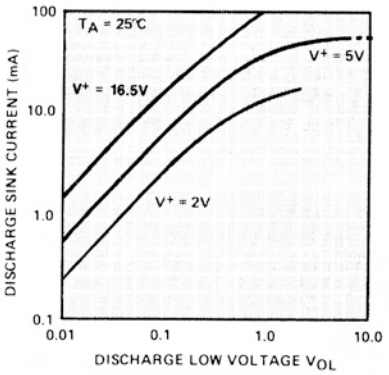

PROPAGATION DELAY AS A FUNCTION OF VOLTAGE LEVEL OF TRIGGER PULSE

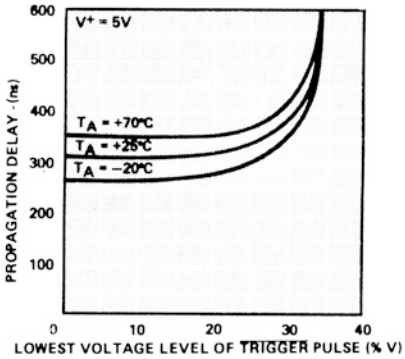

FREE RUNNING FREQUENCY AS A FUNCTION OF R_A, R_B AND C

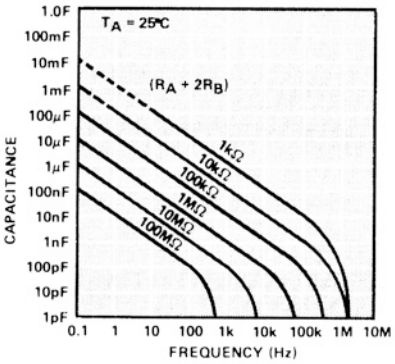

NORMALIZED FREQUENCY STABILITY IN THE ASTABLE MODE AS A FUNCTION OF TEMPERATURE

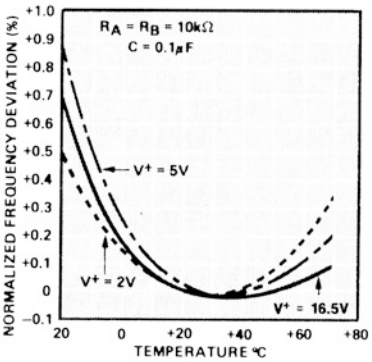

NORMALIZED FREQUENCY STABILITY IN THE ASTABLE MODE AS A FUNCTION OF SUPPLY VOLTAGE

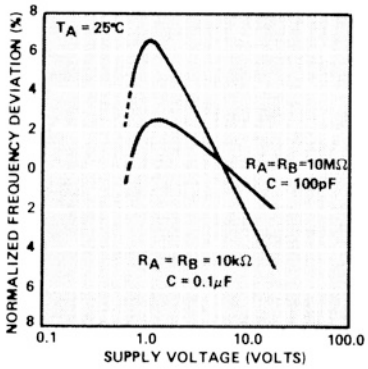

TIME DELAY IN THE MONOSTABLE MODE AS A FUNCTION OF R_A AND C

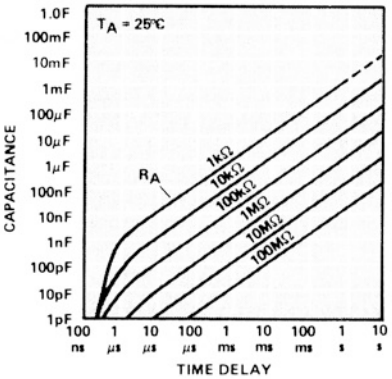

Typical Operating Characteristics

SUPPLY CURRENT AS A FUNCTION OF SUPPLY VOLTAGE

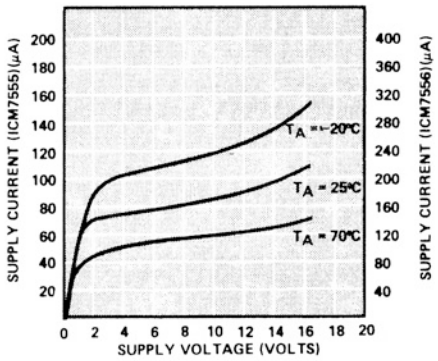

OUTPUT SINK CURRENT AS A FUNCTION OF OUTPUT VOLTAGE

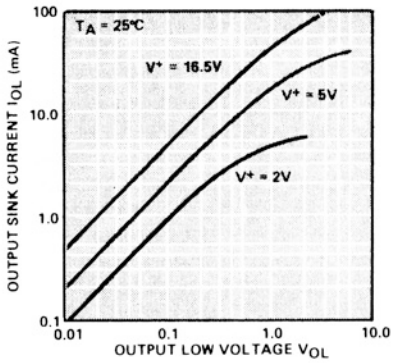

OUTPUT SINK CURRENT AS A FUNCTION OF OUTPUT VOLTAGE

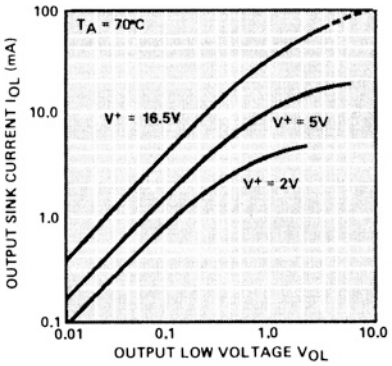

OUTPUT SOURCE CURRENT AS A FUNCTION OF OUTPUT VOLTAGE

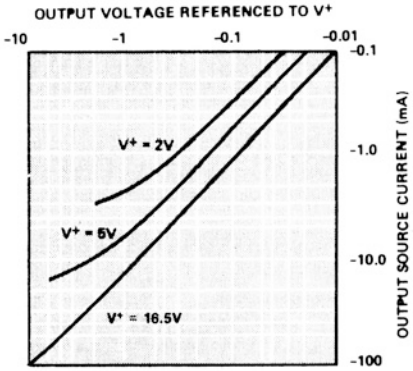

MINIMUM PULSE WIDTH REQUIRED FOR TRIGGERING

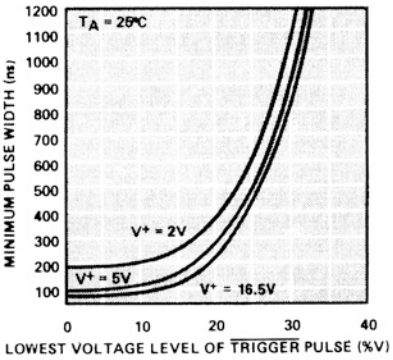

OUTPUT SINK CURRENT AS A FUNCTION OF OUTPUT VOLTAGE

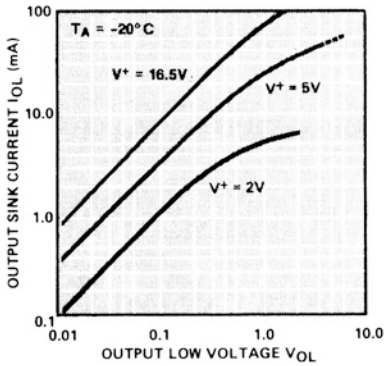

ICM7555/7556

General Purpose Timers

Detailed Description

Both the ICM7555 timer and the ICM7556 dual timer can be configured for either astable or monostable operation. In the astable mode the free running frequency and the duty cycle are controlled by two external resistors and one capacitor. Similarly, the pulse width in the monostable mode is precisely controlled by one external resistor and capacitor.

The external component count is decreased when replacing a bipolar timer with the ICM7555 or ICM7556. The bipolar devices produce large crowbar currents in the output driver. To compensate for this spike, a capacitor is used to decouple the power supply lines. The CMOS timers produce supply spikes of only 2-3mA vs. 300-400mA (Bipolar), therefore supply decoupling is typically not needed. This current spike comparison is illustrated in Figure 3. Another component is eliminated at the control voltage pin. These CMOS timers, due to the high impedance inputs of the comparators, do not require decoupling capacitors on the control voltage pin.

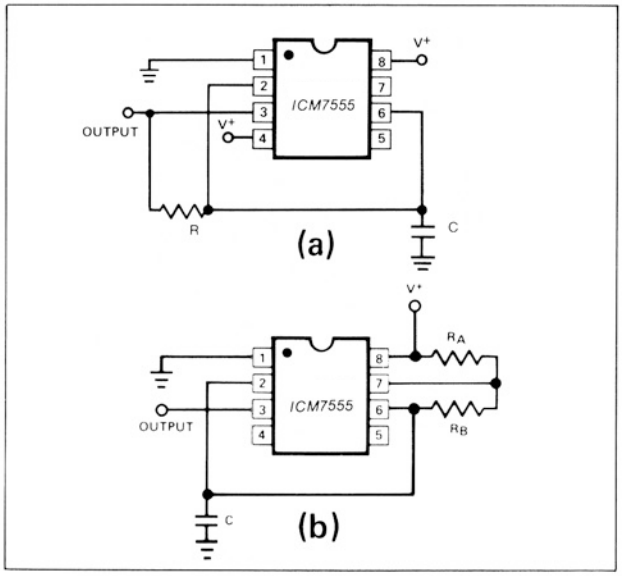

Figure 1. Maxim ICM7555 used in two different astable configurations.

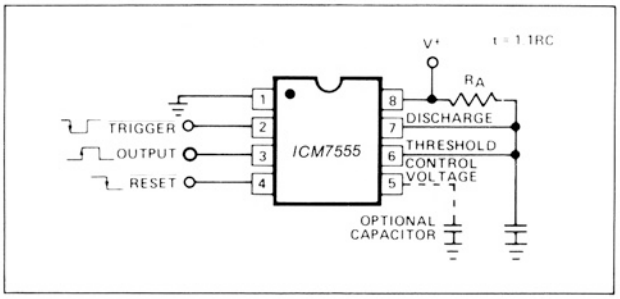

Figure 2. Maxim ICM7555 in a monostable operation.

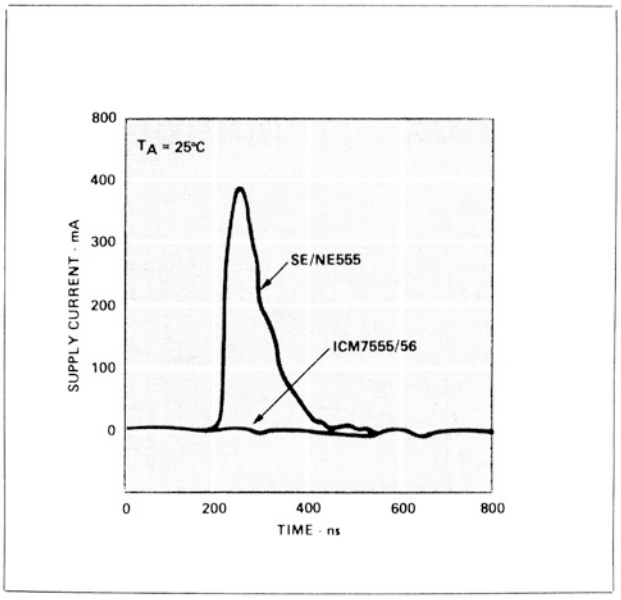

Figure 3. Supply current transient compared with a standard bipolar 555 during an output transition.

Applications Information

Astable Operation

We recommend either of the two astable circuit configurations illustrated in Figure 1. The circuit in (1a) provides a 50% duty cycle output using one timing resistor and capacitor. The oscillator waveform across the capacitor is symmetrical and triangular, swinging from ⅓ to ⅔ of the supply voltage. The frequency generated is defined by:

$$f = \frac{1}{1.4\ RC}$$

The circuit in (1b) provides a means of varying the duty cycle of the oscillator. The frequency is defined by:

$$f = \frac{1.46}{(R_A + 2R_B)C}$$

The duty cycle is:

$$D = \frac{R_B}{R_A + 2R_B}$$

Monostable Operation

The circuit diagram in Figure 2 illustrates monostable operation. In this mode the timer acts as a one shot. Initially the external capacitor is held discharged by the discharge output. Upon application of a negative $\overline{\text{TRIGGER}}$ pulse to pin 2, the capacitor begins to charge exponentially through R_A. The device resets after the voltage across the capacitor reaches ⅔(V^+).

$$t_{output} = -\ln(⅓)R_AC = 1.1\ R_AC$$

Reset

The reset function is significantly improved over the standard bipolar 555 and 556 in that it controls only the internal flip-flop, which in turn simultaneously controls the state of the Output and Discharge pins. This avoids the multiple threshold problems sometimes encountered with slow-falling edges of the bipolar devices. This input is designed to have essentially the same trip voltage as the standard bipolar devices (0.6 to 0.7V). At all supply voltages this input maintains an extremely high impedance.

Control Voltage

The control voltage regulates the two trip voltages for the THRESHOLD and $\overline{\text{TRIGGER}}$ internal comparators. This pin can be used for frequency modulation in the astable mode. By varying the applied voltage to the control voltage pin, delay times can be changed in the monostable mode.

Power Supply Considerations

Since the $\overline{\text{TRIGGER}}$, THRESHOLD and Discharge leakage currents are very low, high impedance timing components may be used, keeping total system supply current at a minimum.

Output Drive Capability

The CMOS output stage is capable of driving most logic families including CMOS and TTL. The ICM7555 and ICM7556 will drive at least two standard TTL loads at a supply voltage of 4.5V or greater. When driving CMOS, the output swing at all supply voltage levels will equal the supply voltage.

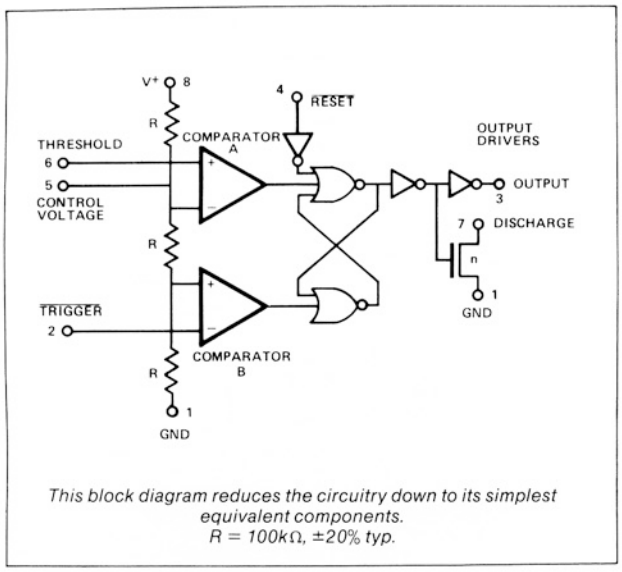

This block diagram reduces the circuitry down to its simplest equivalent components.
R = 100kΩ, ±20% typ.

Figure 4. Block diagram of ICM7555.

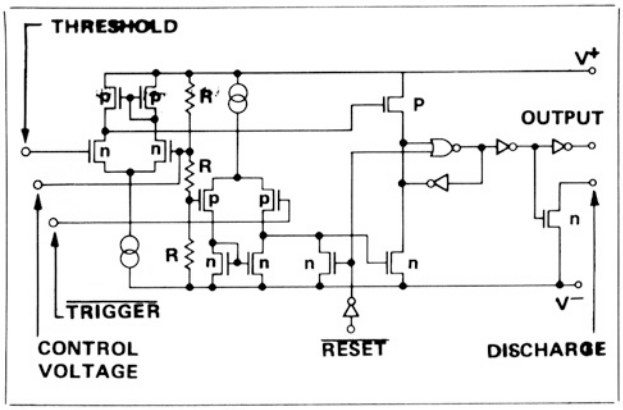

Figure 5. Equivalent circuit.

Function Table

RESET	TRIGGER VOLTAGE†	THRESHOLD VOLTAGE†	OUTPUT	DISCHARGE SWITCH
Low	Irrelevant	Irrelevant	Low	On
High	$< \frac{1}{3} V^+$	Irrelevant	High	Off
High	$> \frac{1}{3} V^+$	$> \frac{2}{3} V^+$	Low	On
High	$> \frac{1}{3} V^+$	$< \frac{2}{3} V^+$	As previously established	

†Voltages levels shown are nominal.

NOTE: $\overline{\text{RESET}}$ will dominate all other inputs. $\overline{\text{TRIGGER}}$ will dominate over THRESHOLD.

Chip Topographies

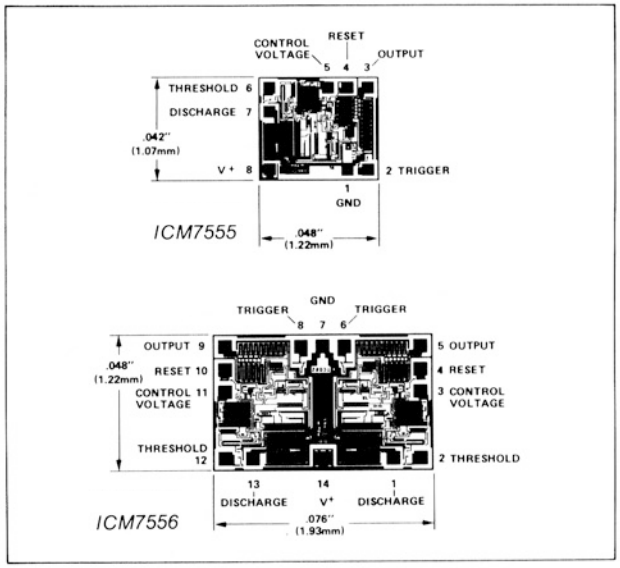

Package Information

(The package drawing(s) in this data sheet may not reflect the most current specifications. For the latest package outline information go to **www.maxim-ic.com/packages**.)

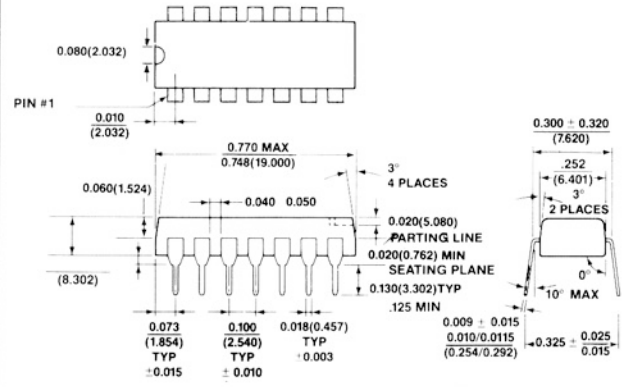

14 Lead Plastic DIP (PD)
θ_{JA} = 140° C/W
θ_{JC} = 70° C/W

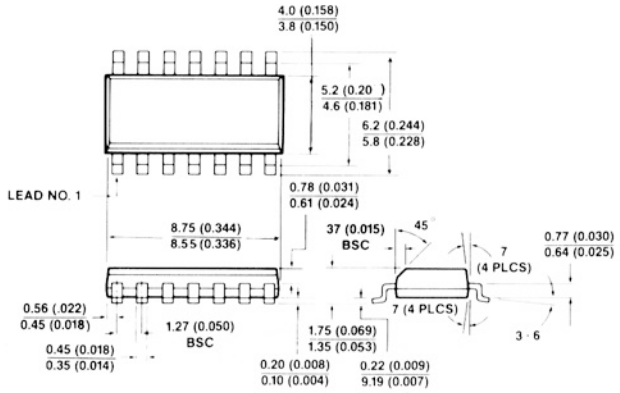

14-Lead Small Outline (SO)

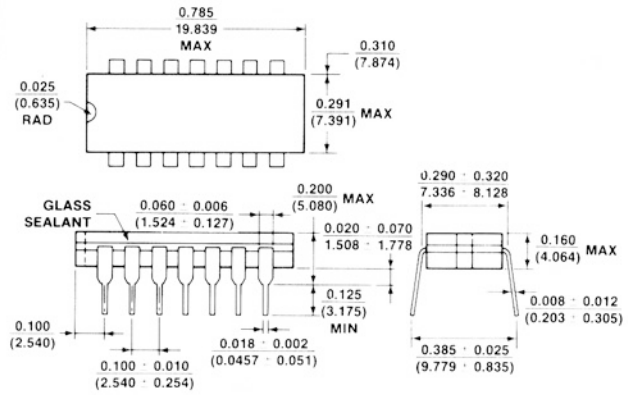

14 Lead CERDIP (JD)
θ_{JA} = 105° C/W
θ_{JC} = 50° C/W

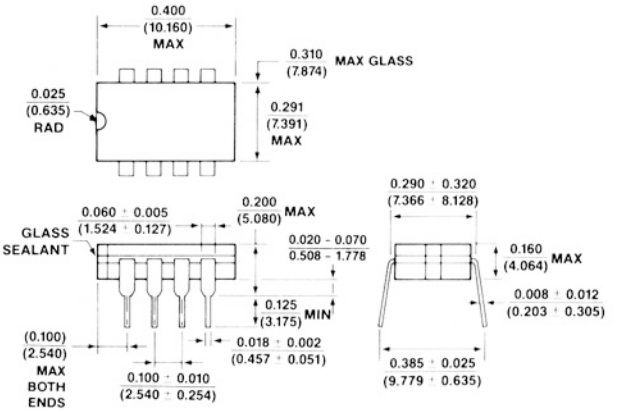

8 Lead CERDIP (JA)
θ_{JA} = 125° C/W
θ_{JC} = 55° C/W

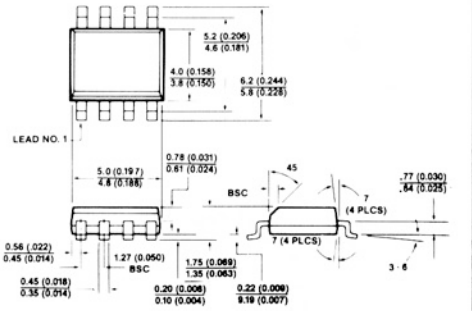

8-Lead Small Outline (SO)

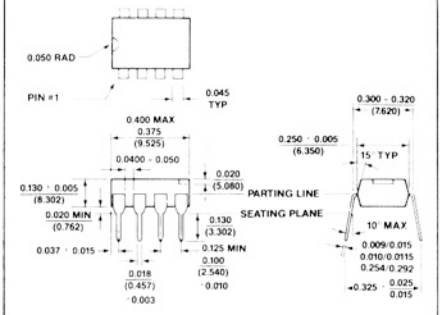

8 Lead Plastic DIP (PA)
θ_{JA} = 160° C/W
θ_{JC} = 75° C/W

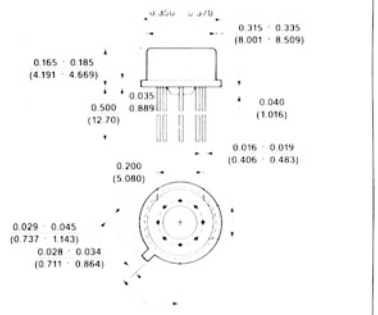

8 Lead TO-99 Can (TV)
θ_{JA} = 150° C/W
θ_{JC} = 45° C/W

Maxim cannot assume responsibility for use of any circuitry other than circuitry entirely embodied in a Maxim product. No circuit patent licenses are implied. Maxim reserves the right to change the circuitry and specifications without notice at any time. The parametric values (min and max limits) shown in the Electrical Characteristics table are guaranteed. Other parametric values quoted in this data sheet are provided for guidance.

© 1992 Maxim Integrated The Maxim logo and Maxim Integrated are trademarks of Maxim Integrated Products, Inc.

ООО «ЛайфЭлектроникс» “LifeElectronics” LLC

ИНН 7805602321 КПП 780501001 Р/С 40702810122510004610 ФАКБ "АБСОЛЮТ БАНК" (ЗАО) в г.Санкт-Петербурге К/С 30101810900000000703 БИК 044030703

Компания «Life Electronics» занимается поставками электронных компонентов импортного и отечественного производства от производителей и со складов крупных дистрибьюторов Европы, Америки и Азии.

С конца 2013 года компания активно расширяет линейку поставок компонентов по направлению коаксиальный кабель, кварцевые генераторы и конденсаторы (керамические, пленочные, электролитические), за счёт заключения дистрибьюторских договоров

Мы предлагаем:

- *Конкурентоспособные цены и скидки постоянным клиентам.*
- *Специальные условия для постоянных клиентов.*
- *Подбор аналогов.*
- *Поставку компонентов в любых объемах, удовлетворяющих вашим потребностям.*

- *Приемлемые сроки поставки, возможна ускоренная поставка.*
- *Доставку товара в любую точку России и стран СНГ.*
- *Комплексную поставку.*
- *Работу по проектам и поставку образцов.*
- *Формирование склада под заказчика.*

- *Сертификаты соответствия на поставляемую продукцию (по желанию клиента).*
- *Тестирование поставляемой продукции.*
- *Поставку компонентов, требующих военную и космическую приемку.*
- *Входной контроль качества.*
- *Наличие сертификата ISO.*

В составе нашей компании организован Конструкторский отдел, призванный помогать разработчикам, и инженерам.

Конструкторский отдел помогает осуществить:

- *Регистрацию проекта у производителя компонентов.*
- *Техническую поддержку проекта.*
- *Защиту от снятия компонента с производства.*
- *Оценку стоимости проекта по компонентам.*
- *Изготовление тестовой платы монтаж и пусконаладочные работы.*

Тел: +7 (812) 336 43 04 (многоканальный)
Email: org@lifeelectronics.ru

www.lifeelectronics.ru