MADE IN THE USA SINCE 1936 RELIABILITY BEYOND MEASURE

S660 Preset Totalizer Counter

File# E199939

- **Easily programmed from the front panel**
- **Remote reset capability**
- **Input variety:**
  Quadrature, Switch, TTL, CMOS, NAMUR, PNP, NPN
- **Software functions include:**
  Password
  Display Scaling
  Set Point Programming
  Decimal Point Selection
- **5A Relay Outputs**
- **Optional 12DCV Excitation**

The S660 is a versatile totalizing counter that can be adapted to a wide variety of counting, measuring and controlling applications.

The control inputs offer several counter operation modes:
Count/direction, add/add, add/subtract, subtract/subtract, quadrature and reverse quadrature.

Optional relay outputs enhance the counter from a passive device to an integral control element for your application.

MADE IN THE USA SINCE 1936 RELIABILITY BEYOND MEASURE

S660 Preset Totalizer Counter

Ordering Information

S660	–			–		–		–	
Basic Unit		Power Supply		Input		Output		Excitation	Other

Select From Each One Below		
Basic Unit		
		S660
Power Supply		
	1	120 ACV
	2	240 ACV
Input		
	1	Standard
	2	Quadrature
Output		
	0	None
	1	One Relay
	2	Two Relays
Excitation		
	0	None
	1	12DCV (100mA Max Current)
Other		
	0	None

MADE IN THE USA SINCE 1936 RELIABILITY BEYOND MEASURE

S660 Preset Totalizer Counter

Specifications

DISPLAY	
Type	6-digit, 7-segment, red LED
Height	0.56" (14.2mm)
Decimal Point	User-programmable
Count Direction	"+" indication implied, "-" indication displayed
Display Range	-99,999 to +999,999
Output Indicators	1 and 2
POWER REQUIREMENTS	
AC Voltages	120 or 240VAC, ±10%
Power Consumption	3VA
INPUT RATINGS	
Current Sinking	10KΩ 5% Resistor pull-up to (9.0 - 16DCV) ±10%
Current Sourcing	5.1KΩ 5% Resistor pull-down to common
Minimum Pulse Width	~5µs
Low Pass Filter	<200Hz
Low Bias	VLT = 1.6V ±10% VUT = 3.6V ±10%
High Bias	VLT = 5.0V ±10% VUT = 7.0V ±10%
Count Rate	20KHz (Pulse Max) 5KHz (Quadrature X4 Max)
Maximum Voltage Input A,B, and User	30DCV (Max)
User Input	VLT ≤ 0.9DCV, VUT = 3.15DCV (max) (Display Hold) Display is frozen when the User Input is pulled low
ENVIRONMENTAL	
Operating Temperature	0°C to +40°C
Storage Temperature	-10°C to +60°C
Relative Humidity	0 to 80% non-condensing for temperatures less than 32°C, decreasing linearly to 50% at 40°C
Ambient Temperature	25°C
Temp. Coefficient (per °C)	±100ppm/°C
Warm-up Time	15 minutes
MECHANICAL	
Bezel	3.93" x 2.04" x .52" (99.8mm x 51.8mm x 13.2mm)
Depth	3.24" (82.3mm)
Panel Cutout	3.62" x 1.77" (92mm x 45mm)
Case Material	PBT-ABS
Weight	9oz (255.1g)

Mounting Requirements -

The S660 series 1/8 DIN counters require a panel cutout of 1.77” (45mm) high by 3.62” (92mm) wide.

To install the counter into a panel cutout, remove the clips from the side of the meter.

Slide the meter through your panel cutout, then slide the mounting clips back on the meter.

Press evenly to ensure a proper fit.

Dimensions

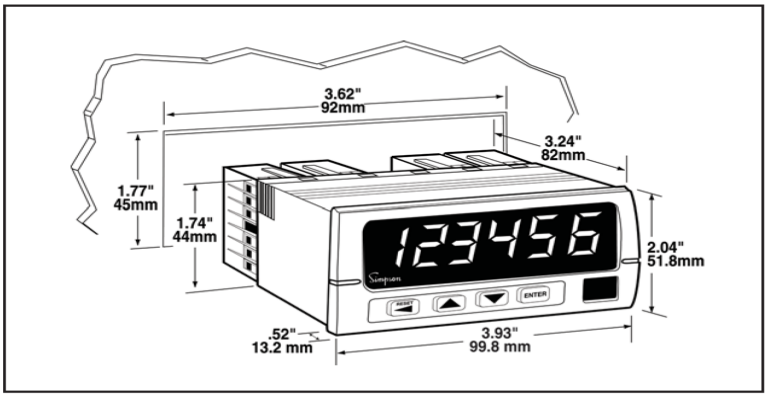

Accessories available for the S660

Chariot

The Chariot is used to mount most cube-style quadrature encoders and measuring wheels. Made of anodized aluminum, the chariot includes mounting hardware and selectable pivotal points. Wheels, tires, and flexible shaft couplings are sold separately.
Catalog No. 46012

Flexible Shaft Couplings

The one-piece flexible coupling connects the shaft of a cube-style encoder to an ancillary equipment shaft without worry of misalignment of rotary frequency. The coupling ensures minimum windup, minimum rotary oscillation, and no hysteresis.

Coupling: For connecting an encoder to a 3/8” shaft. **Catalog No. 46002**

Coupling package: For connecting an encoder to 1/4” or 5/16” diameter shaft.
Package includes: One flexible coupling (1/2” I.D.) and three reducing inserts (1/4”, 5/16”, 3/8”).
Catalog No. 46003

Tire Durometer

A Simpson 12” circumference anodized aluminum measuring wheel is the right choice to complete the setup of a length measurement system.

Whether the application requires one or two, Simpson’s measuring wheels will perform accurately and reliably throughout the measuring process.

Also included on the measuring wheel is a printed alignment scale which assists in the installation and measurement of the length measurement system.

Simpson offers four replaceable durometer tires that consist of a black tire that has a longer life span and three non marking tires. The three non marking tires are for delicate materials such as plastics, textiles, wood, metal and paper to prevent tearing, damage or marking of delicate materials.

80A, black tire; longer service life for plastics, metals. **Catalog No. 46004**

83A, non-marking tire for textiles, medium textures. **Catalog No. 46005**

92A, non-marking tire for plastics, metals, coarse wood. **Catalog No. 46006**

70A, non-marking tire for soft textiles. **Catalog No. 46007**

5 Feet Cable Assembly **Catalog No. 46013**

10 Feet Cable Assembly **Catalog No. 46014**

15 Feet Cable Assembly **Catalog No. 46015**

ООО «ЛайфЭлектроникс» “LifeElectronics” LLC

ИНН 7805602321 КПП 780501001 Р/С 40702810122510004610 ФАКБ "АБСОЛЮТ БАНК" (ЗАО) в г.Санкт-Петербурге К/С 30101810900000000703 БИК 044030703

Компания «Life Electronics» занимается поставками электронных компонентов импортного и отечественного производства от производителей и со складов крупных дистрибьюторов Европы, Америки и Азии.

С конца 2013 года компания активно расширяет линейку поставок компонентов по направлению коаксиальный кабель, кварцевые генераторы и конденсаторы (керамические, пленочные, электролитические), за счёт заключения дистрибьюторских договоров

Мы предлагаем:

- *Конкурентоспособные цены и скидки постоянным клиентам.*
- *Специальные условия для постоянных клиентов.*
- *Подбор аналогов.*
- *Поставку компонентов в любых объемах, удовлетворяющих вашим потребностям.*

- *Приемлемые сроки поставки, возможна ускоренная поставка.*
- *Доставку товара в любую точку России и стран СНГ.*
- *Комплексную поставку.*
- *Работу по проектам и поставку образцов.*
- *Формирование склада под заказчика.*

- *Сертификаты соответствия на поставляемую продукцию (по желанию клиента).*
- *Тестирование поставляемой продукции.*
- *Поставку компонентов, требующих военную и космическую приемку.*
- *Входной контроль качества.*
- *Наличие сертификата ISO.*

В составе нашей компании организован Конструкторский отдел, призванный помогать разработчикам, и инженерам.

Конструкторский отдел помогает осуществить:

- *Регистрацию проекта у производителя компонентов.*
- *Техническую поддержку проекта.*
- *Защиту от снятия компонента с производства.*
- *Оценку стоимости проекта по компонентам.*
- *Изготовление тестовой платы монтаж и пусконаладочные работы.*

Тел: +7 (812) 336 43 04 (многоканальный)
Email: org@lifeelectronics.ru

www.lifeelectronics.ru