DESCRIPTION

Demonstration circuit 1254A is a polyphase 3-output step-down supply with tracking featuring the LTC3853EUJ. The entire circuit, excluding the bulk output capacitors, fits within a 1.5” X 1” area on all layers. The package style for the LTC3853EUJ is a 6mm x 6mm plastic QFN.

The main features of the board include rail tracking, an internal 5V linear regulator for bias, RUN pins for each output, two PGOOD signals and a Mode selector that allow the converter to run in CCM, pulse skip or Burst Mode operation. Synchronization to an external clock is also possible through some minor component changes.

The board is configured for resistor current sensing, but optional DCR sensing is possible through some component changes.

The input voltage range is 6.5V to 24V. For applications with narrow, 5V ± 0.5V input range, the board has an optional resistor to tie the INTVCC pin to the VIN pin.

The LTC3853 datasheet gives a complete description of the part, operation and application information and must be read in conjunction with this quick start guide for demo circuit 1254A.

Design files for this circuit board are available. Call the LTC factory.

Burst Mode is a trademark of Linear Technology Corporation

Table 1. Performance Summary (T_A = 25°C)

PARAMETER	CONDITION	VALUE
Input Voltage Range		6.5V - 24V
Output Voltage V_{OUT1}	V_{IN} = 6.5V to 24V, I_{OUT1} = 0A to 5A	2.5V ±2%
Output Voltage V_{OUT2}	V_{IN} = 6.5V to 24V, I_{OUT2} = 0A to 5A	1.8V ±2%
Output Voltage V_{OUT3}	V_{IN} = 6.5V to 24V, I_{OUT3} = 0A to 5A	3.3V ±2%
Nominal Switching Frequency		500kHz
Efficiency See Figures 4, 5 and 6 for efficiency curves	V_{OUT1} = 2.5V, I_{OUT1} = 5A; V_{IN} = 12V	89.2% Typical
	V_{OUT2} = 1.8V, I_{OUT2} = 5A; V_{IN} = 12V	86.6% Typical
	V_{OUT3} = 3.3V, I_{OUT3} = 5A; V_{IN} = 12V	91.7% Typical

QUICK START PROCEDURE

Demonstration circuit 1254A is easy to set up to evaluate the performance of the LTC3853EUJ. Refer to Figure 1 for proper measurement equipment setup and follow the procedure below:

NOTE: When measuring the input or output voltage ripple, care must be taken to avoid a long ground lead on the oscilloscope probe. Measure the input or output voltage ripple by touching the probe tip directly across the Vin or Vout and GND terminals. See Figure 2 for proper scope probe technique.

1. Place jumpers in the following positions:

   JP1 On

   JP2 On

   JP3 On

   JP4 Pulse Skip

2. With power off, connect the input power supply to Vin and GND.
3. Turn on the power at the input.

NOTE: Make sure that the input voltage does not exceed 24V.

4. Check for the proper output voltages.
   Vout1 = 2.450V to 2.550V,
   Vout2 = 1.765V to 1.836V,
   Vout3 = 3.234V to 3.366V

   NOTE: If there is no output, temporarily disconnect the load to make sure that the load is not set too high.

5. Once the proper output voltages are established, adjust the loads within the operating range and observe the output voltage regulation, ripple voltage, efficiency and other parameters.

6. Different operating modes can be evaluated by changing the position of jumper JP4.

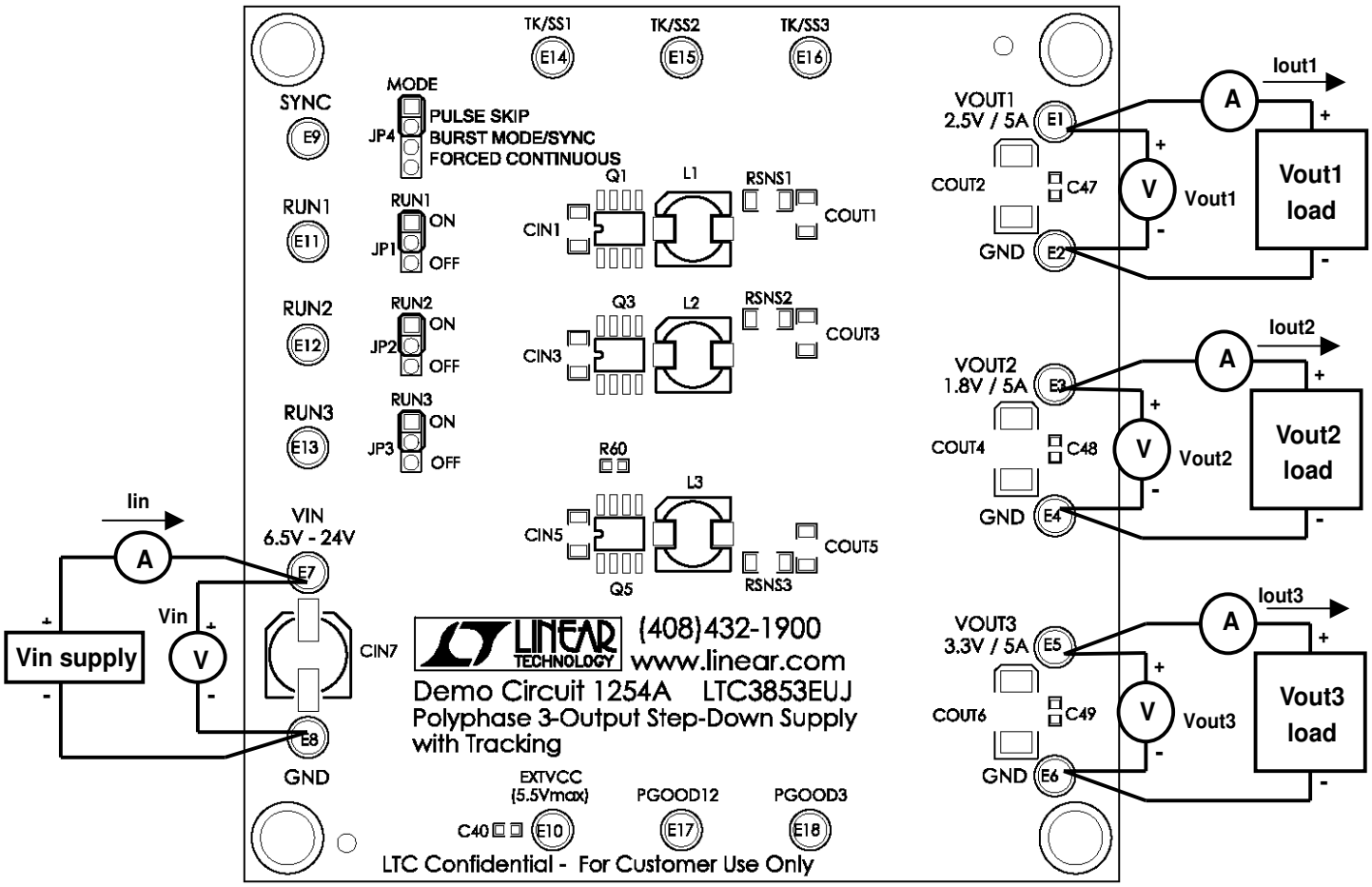

Figure 1. Proper Measurement Equipment Setup

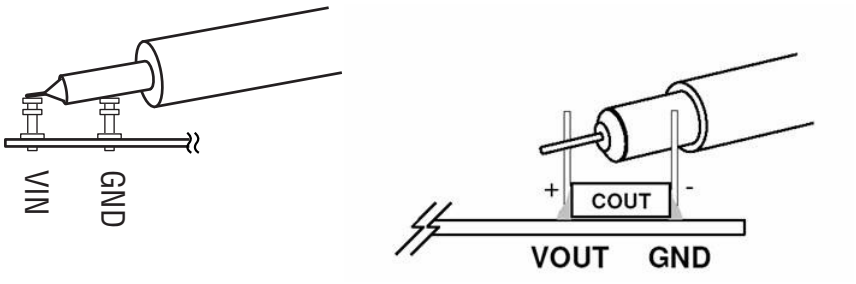

Figure 2. Measuring Input or Output Ripple Across Terminals or Directly Across Bulk Capacitor

RAIL TRACKING

Demonstration circuit 1231 is setup for coincident rail tracking where VOUT1 and VOUT2 track VOUT3 and the ramp-rate for VOUT3 is determined by the value of the TK/SS3 capacitor at C46 - See Figure 3. Please note that turning channel 3 off, will also turn off the other two channels, as they track channels 3.

This board can be modified on the bench for external rail tracking or for independent turn-on of the rails. For the latter case, the ramp-rate for VOUT1 and VOUT2 will be determined by their respective TRK/SS capacitors. Refer to Table 2 for tracking options and to the data sheet for more details.

Table 2. Output Tracking Options

	TK/SS1 RESISTOR AND CAPACITORS			TK/SS2 RESISTOR AND CAPACITORS			TK/SS3 RESISTOR AND CAPACITORS		
CONFIGURATION	**R31**	**R32**	**C44**	**R33**	**R34**	**C45**	**R35**	**R36**	**C46**
Soft Start Without Tracking									
Vout1 (Default)	Open	Open	10nF						
Vout2				open	Open	10nF			
Vout3							X	Open	10nF
Vout3 equals External Ramp							0Ω	Open	Open
Ratiometric Tracking:									
Vout1 tracking Vout3	63.4kΩ	20.0kΩ	Open						
Vout2 tracking Vout3				63.4kΩ	20.0kΩ	Open			
Coincident Tracking (Default):									
Vout1 tracking Vout3	43.2kΩ	20.0kΩ	Open						
Vout2 tracking Vout3				24.9kΩ	20.0kΩ	Open			
Vout3 tracking ext. ramp							Resistor divider		Open

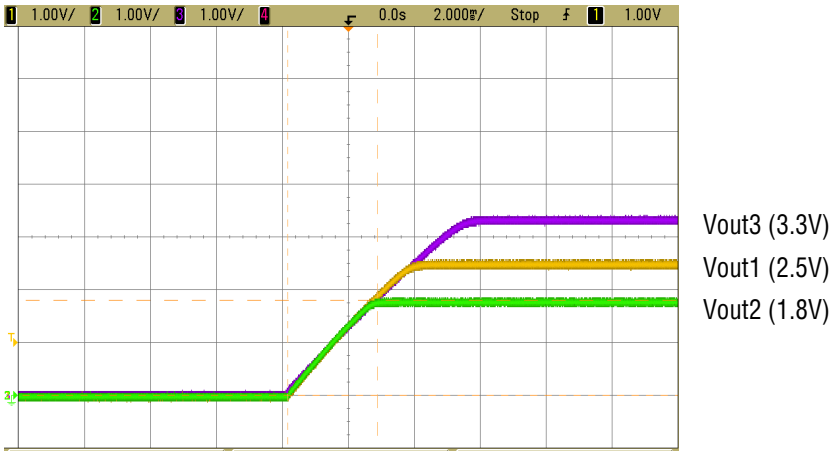

Figure 3. Default coincidental startup tracking

FREQUENCY SYNCHRONIZATION

Demonstration circuit 1231's Mode selector allows the converter to run in CCM, pulse skip or Burst Mode operation by changing position of jumper JP4. For synchronizing to an external clock source, however, some bench modification is needed. Refer to Table 3 and to the data sheet for more details.

Table 3. Free Running and Synchronized Operation Options

	FREQ PIN COMPONENTS			MODE SELECTOR
CONFIGURATION	**R48**	**R63**	**R47**	**JP4**
Free Running	10kΩ	0Ω	3.16kΩ	FCC, Pulse Skip or Burst Mode
Synchronized to External Clock	open	10kΩ	0.01µF	Burst Mode or Open

INDUCTOR DCR SENSING AND RESISTOR SENSING

The DCR sense circuit uses the resistive voltage drop across the inductor to estimate the current. In contrast to the traditional sense resistor current feedback, the DCR sensing circuit offers lower cost and higher efficiency, but results in less accurate current limit due to the large variation of the inductor DC resistance. For modifying the demo board for DCR sensing, please refer to Table 4. An efficiency improvement of 1% or more is still possible for optional DCR sensing.

The typical efficiency versus load current for each of the outputs is given in Figures 4 to 6 respectively for a range of input voltages.

Table 4. DCR sensing component selection

	REMOVE RSENSE NETWORK	ADD DCR SENSE NETWORK			
Vout1	R21, R22 = Open, RSNS1 = Short	R51 = 1.69kΩ	R52 = 22.6kΩ	R53 = 0Ω	C21 = 0.1µF
Vout2	R23, R24 = Open, RSNS2 = Short	R52 = 1.69kΩ	R55 = 22.6k Ω	R56 = 0Ω	C22 = 0.1µF
Vout3	R25, R26 = Open, RSNS3 = Short	R53 = 2.74kΩ	R58 = 7.5kΩ	R59 = 0Ω	C23 = 0.1µF

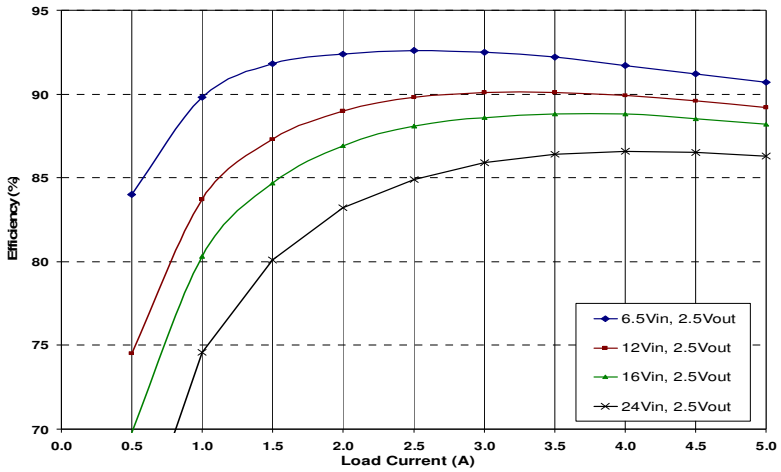

Figure 4. Typical Efficiency vs. Load Current for Vout1 (2.5V) vs. Vin

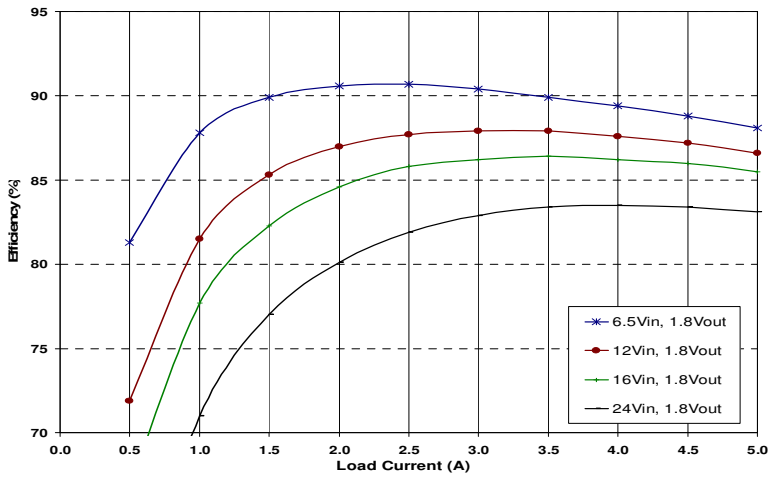

Figure 5. Typical Efficiency vs. Load Current for Vout2 (1.8V) vs. Vin

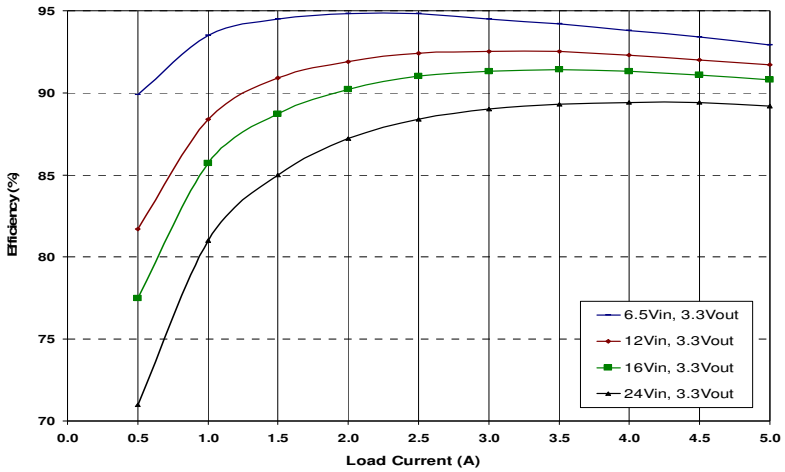

Figure 6. Typical Efficiency vs. Load Current for Vout3 (3.3V) vs. Vin

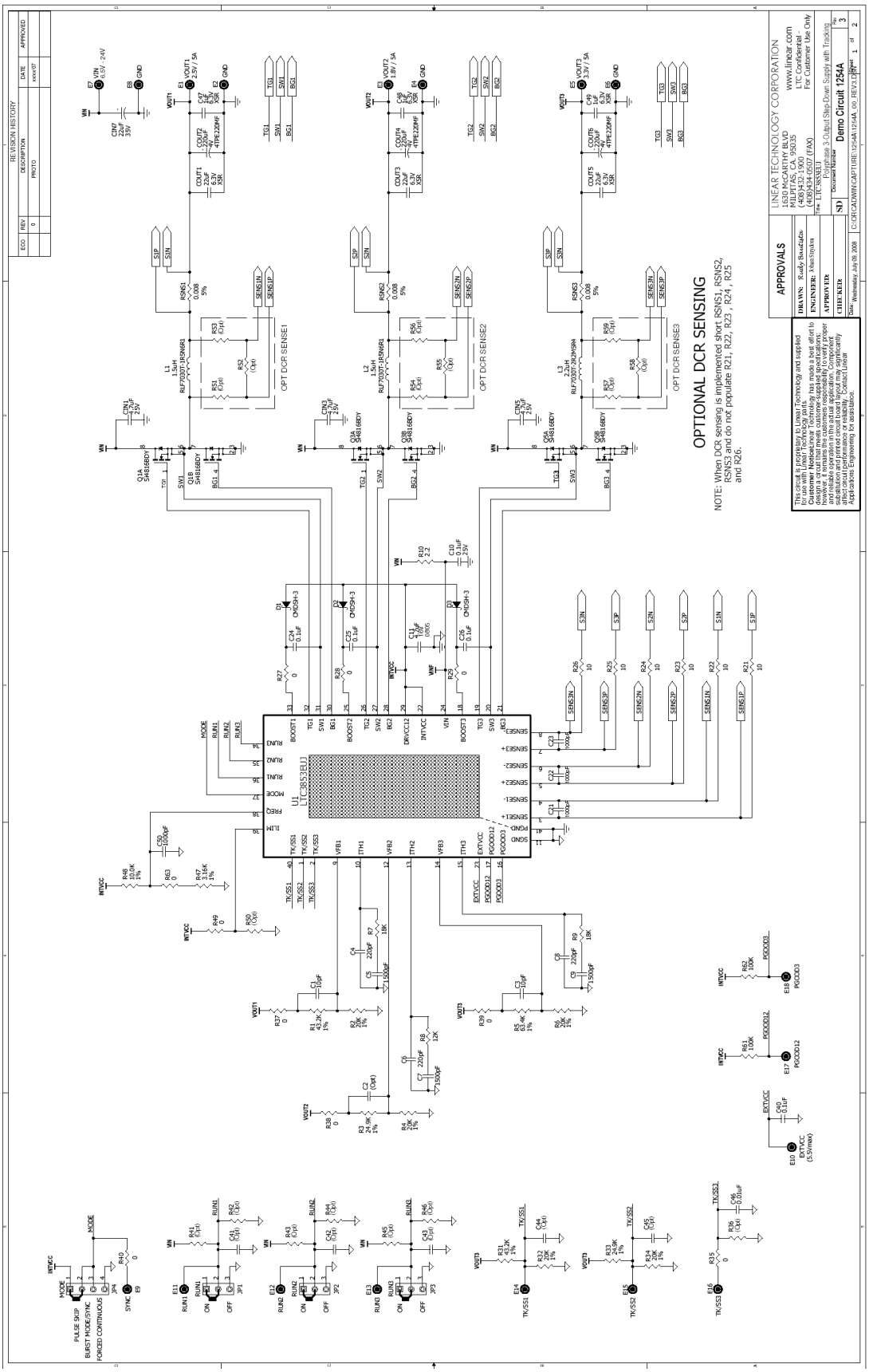
OPTIONAL DCR SENSING
NOTE: When DCR sensing is implemented short RSNS1, RSNS2, RSNS3 and do not populate R21, R22, R23, R24, R25 and R26.
OPT DCR SENSE1
OPT DCR SENSE2
OPT DCR SENSE3
U1
LTC3853EUJ
LINEAR TECHNOLOGY CORPORATION
www.linear.com
Demo Circuit 1254A
Polyphase 3-Output Step-Down Supply with Tracking
APPROVALS

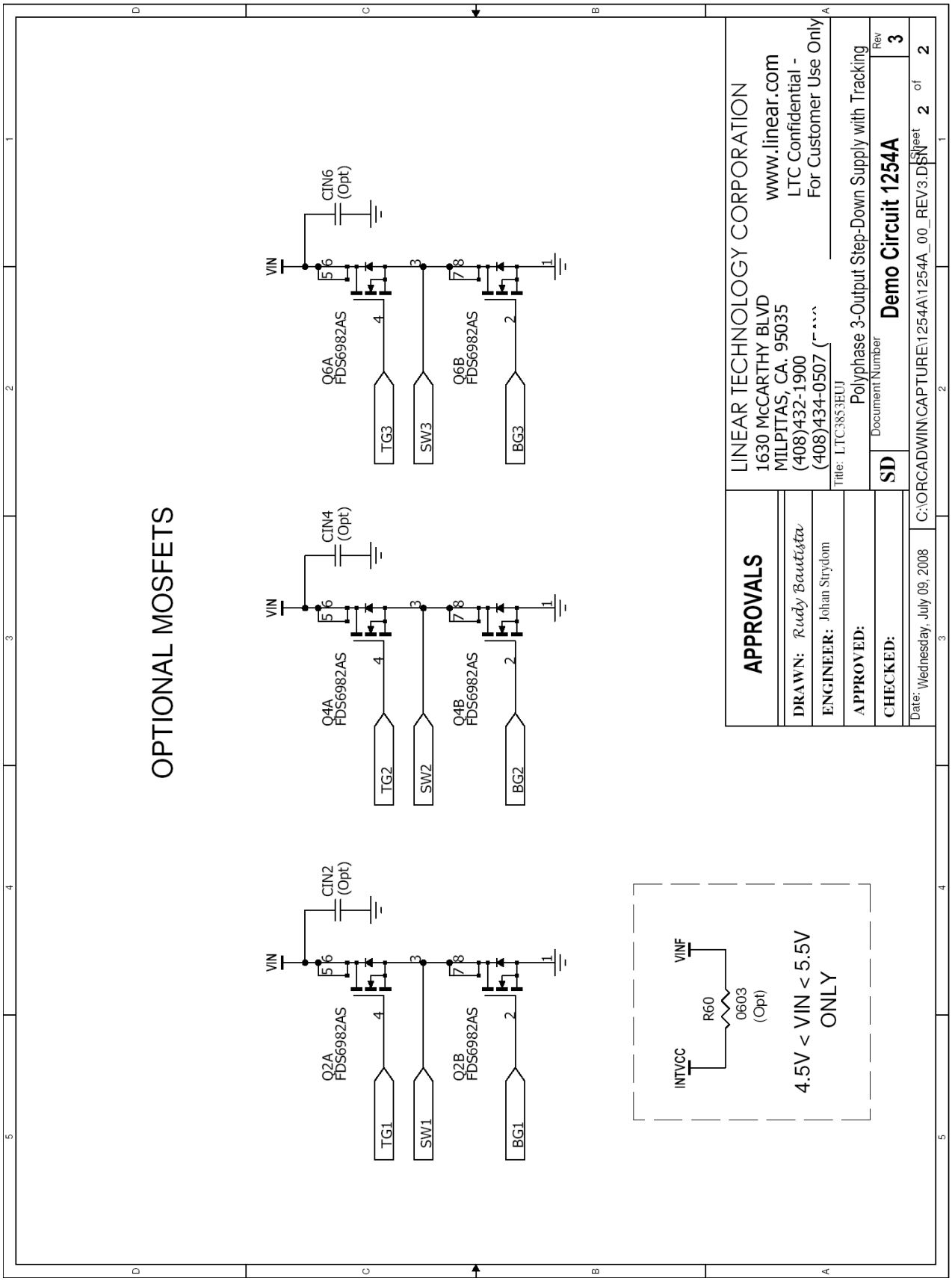
OPTIONAL MOSFETS
VIN
CIN2 (Opt)
Q2A FDS6982AS
Q2B FDS6982AS
TG1
SW1
BG1
CIN4 (Opt)
Q4A FDS6982AS
Q4B FDS6982AS
TG2
SW2
BG2
CIN6 (Opt)
Q6A FDS6982AS
Q6B FDS6982AS
TG3
SW3
BG3
INTVCC
VINF
R60
0603 (Opt)
4.5V < VIN < 5.5V ONLY
APPROVALS
DRAWN: Rudy Bautista
ENGINEER: Johan Strydom
APPROVED:
CHECKED:
LINEAR TECHNOLOGY CORPORATION
1630 McCARTHY BLVD
MILPITAS, CA. 95035
(408)432-1900
(408)434-0507
www.linear.com
LTC Confidential - For Customer Use Only
Title: LTC3853EUJ
Polyphase 3-Output Step-Down Supply with Tracking
Document Number
SD
Demo Circuit 1254A
Rev 3
Date: Wednesday, July 09, 2008
C:\ORCADWIN\CAPTURE\1254A\1254A_00_REV3.DSN
Sheet 2 of 2

ООО «ЛайфЭлектроникс» “LifeElectronics” LLC

ИНН 7805602321 КПП 780501001 Р/С 40702810122510004610 ФАКБ "АБСОЛЮТ БАНК" (ЗАО) в г.Санкт-Петербурге К/С 30101810900000000703 БИК 044030703

Компания «Life Electronics» занимается поставками электронных компонентов импортного и отечественного производства от производителей и со складов крупных дистрибьюторов Европы, Америки и Азии.

С конца 2013 года компания активно расширяет линейку поставок компонентов по направлению коаксиальный кабель, кварцевые генераторы и конденсаторы (керамические, пленочные, электролитические), за счёт заключения дистрибьюторских договоров

Мы предлагаем:

- *Конкурентоспособные цены и скидки постоянным клиентам.*
- *Специальные условия для постоянных клиентов.*
- *Подбор аналогов.*
- *Поставку компонентов в любых объемах, удовлетворяющих вашим потребностям.*

- *Приемлемые сроки поставки, возможна ускоренная поставка.*
- *Доставку товара в любую точку России и стран СНГ.*
- *Комплексную поставку.*
- *Работу по проектам и поставку образцов.*
- *Формирование склада под заказчика.*

- *Сертификаты соответствия на поставляемую продукцию (по желанию клиента).*
- *Тестирование поставляемой продукции.*
- *Поставку компонентов, требующих военную и космическую приемку.*
- *Входной контроль качества.*
- *Наличие сертификата ISO.*

В составе нашей компании организован Конструкторский отдел, призванный помогать разработчикам, и инженерам.

Конструкторский отдел помогает осуществить:

- *Регистрацию проекта у производителя компонентов.*
- *Техническую поддержку проекта.*
- *Защиту от снятия компонента с производства.*
- *Оценку стоимости проекта по компонентам.*
- *Изготовление тестовой платы монтаж и пусконаладочные работы.*

Тел: +7 (812) 336 43 04 (многоканальный)
Email: org@lifeelectronics.ru

www.lifeelectronics.ru