USED ON

DWG NO 6368011

THIS DRAWING IS A CONTROLLED DOCUMENT

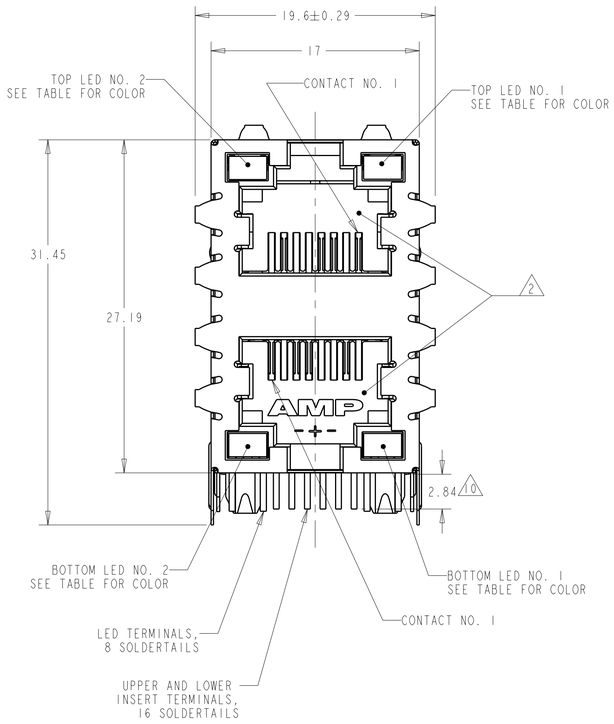

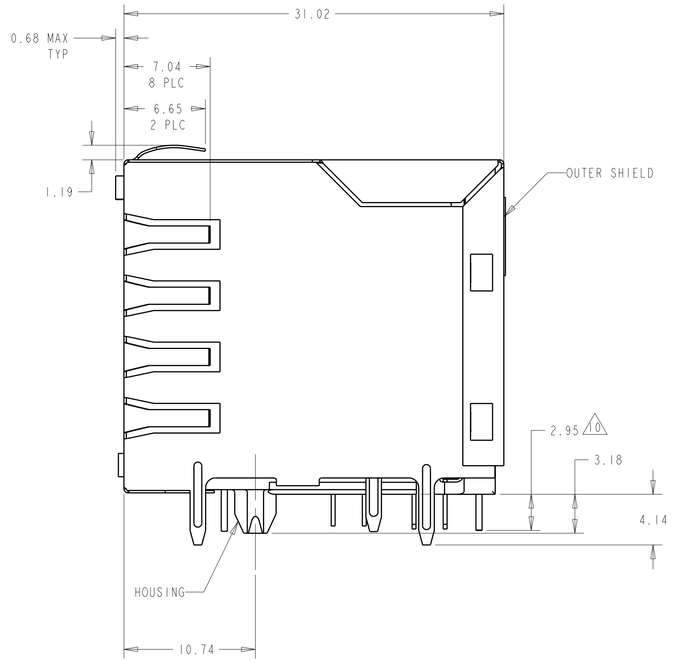

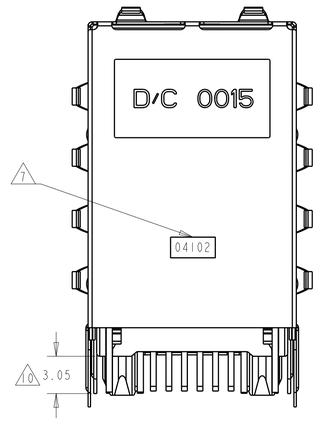

1. MATERIAL: **HOUSING** - PBT POLYESTER, BLACK, UL 94V-O.
TERMINALS - 0.33 THICK PHOSPHOR BRONZE PLATED WITH 1.27um MINIMUM THICK HARD GOLD IN LOCALIZED MATING INTERFACE AND 3.81um MINIMUM THICK MATTE TIN IN SOLDER AREA OVER 1.27um MINIMUM THICK NICKEL UNDERPLATE.
SHIELD - 0.196 THICK COPPER ALLOY PLATED WITH 1.27 um [.000050] MINIMUM NICKEL AND 2.03 um [.000080] MINIMUM HOT TIN DIP ON PCB GROUND TABS..
LIGHT EMITTING DIODE (LED) - DIFUSED EPOXY LENS, 0.51 X 0.51 CARBON STEEL WIREFRAME LEADS PREPLATED WITH 8.89 um THICK Sn/Cu OVER 2.03 um THICK Ag OVER 1.02 THICK Cu OVER 3.56 um THICK Ni OVER 1.02 um Cu UNDERPLATE

2. JACK CAVITY CONFORMS TO FCC RULES AND REGULATIONS, PART 68 SUBPART F.

3. SUGGESTED OPERATING CURRENT FOR THE LED IS 20mA, GREEN/ORANGE BI-COLOR LEDS ON 6368011-4 AND 1-6368011-0 WILL EMIT GREEN LIGHT ON FORWARD BIAS CURRENT AND ORANGE LIGHT ON REVERSE BIAS CURRENT. GREEN/RED BI-COLOR LEDS ON 6368011-9 AND 1-6368011-0 WILL EMIT GREEN LIGHT ON FORWARD BIAS CURRENT AND RED LIGNT ON REVERSE BIAS CURRENT. GREEN/YEL BI-COLOR LEDS ON 1-6368011-1 WILL EMIT GREEN LIGHT ON FORWARD BIAS CURRENT AND YELLOW LIGNT ON REVERSE BIAS CURRENT.

4. THIS MODULAR JACK WITH INTEGRATED LED IS NOT IR REFLOW SOLDERING PROCESS COMPATIBLE.

5. USE NO. 30 DRILL BIT OR 3.25mm DRILL BIT WHEN PRODUCING THESE PCB HOLES.

6. HM-15 LUBE APPLIED TO THE GOLD PLATED AREA OF THE TERMINALS ON 6368011-8 ONLY.

7. DATE CODE LOCATED ON REAR OF PART APPROX AS SHOWN:
FIRST 2 DIGITS ARE LAST 2 DIGITS OF YEAR,
SECOND 2 DIGITS ARE MANUFACTURING WORK WEEK,
LAST DIGIT IS DAY OF WEEK, WITH SUNDAY=1.

8. THE PART NUMBER IS PRELIMINARY.

9. OBSOLETE PARTS:OBSOLETE CIS STREAMLINING PER D.RENAUD/D.SINISI

10. GROUND PIN AND ALL SIGNAL PINs' LENGTH SHOULD BE 4.06 MM EXCEPT OUTER SHIELD
THIS REQUEST IS ONLY FOR PART 1-6368011-4

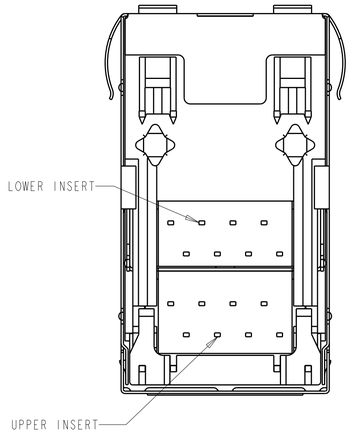

	3.44 MAX	GREEN	GREEN	GREEN	GREEN	1-6368011-5
	4.14 10	GREEN	YELLOW	GREEN	YELLOW	1-6368011-4
	4.14	GREEN	YELLOW	N/A	N/A	1-6368011-3 8
	4.14	GREEN/YELLOW	GREEN/YELLOW	GREEN/YELLOW	GREEN/YELLOW	1-6368011-1
	4.14	GREEN/ORANGE	GREEN/ORANGE	GREEN/RED	GREEN/RED	1-6368011-0
	4.14	GREEN/RED	GREEN/RED	GREEN/RED	GREEN/RED	6368011-9
	4.14	YELLOW	GREEN	YELLOW	GREEN	6368011-8 6
	4.14	GREEN	ORANGE	N/A	N/A	6368011-7
9 OBSOLETE		~~GREEN~~	~~GREEN~~	~~YELLOW~~	~~GREEN~~	~~6368011-6~~
	4.14	YELLOW	GREEN	YELLOW	GREEN	6368011-5
	4.14	GREEN/ORANGE	GREEN/ORANGE	GREEN/ORANGE	GREEN/ORANGE	6368011-4
	4.14	GREEN	YELLOW	GREEN	YELLOW	6368011-3
9 OBSOLETE		~~YELLOW~~	~~GREEN~~	~~GREEN~~	~~YELLOW~~	~~6368011-2~~
	4.14	GREEN	GREEN	GREEN	GREEN	6368011-1
	DIM A	BOTTOM LED NO. 2	BOTTOM LED NO. 1	TOP LED NO. 2	TOP LED NO. 1	PART NUMBER

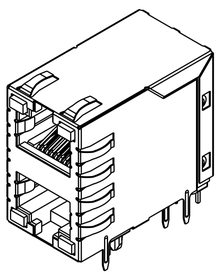

PN 6368011-1,2,3,4,5,6,8
& 1-6368011-0,1,5
SCALE 2:1

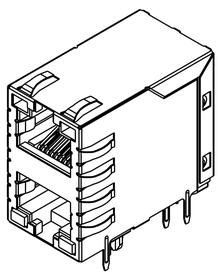

PN 6368011-7
SAME AS 6368011-1
EXCEPT AS SHOWN WITHOUT TOP LED
SCALE 2:1

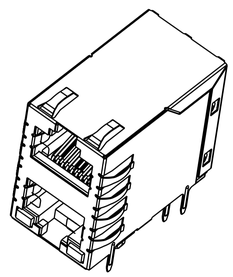

PN 1-6368011-3
SAME AS 6368011-3
EXCEPT AS SHOWN WITHOUT TOP LED
SCALE 2:1

P	LTR	REVISION RECORD	DATE	DWN	APVD
	J	REV PER ECR-11-025824	13JAN2012	JJ	AC

DIMENSIONS: mm

TOLERANCES UNLESS OTHERWISE SPECIFIED:
0 PLC ±-
1 PLC ±-
2 PLC ±0.25
3 PLC ±0.25
4 PLC ±-
ANGLES± -
SURFACE TEXTURE -

DWN 13APR2005 Vic Slack/L.A.MAYER
CHK 13APR2005 J.WESTMAN
APVD 13APR2005 S.FLICKINGER

MATERIAL SEE NOTE 1
HEAT TREAT - -

TE Connectivity

NAME MODULAR JACK ASSEMBLY,STACKED, 2 X 1, 8 POSITION, SHIELDED,

SCALE 1:1 | SIZE A1 | DRAWING NO 6368011 | SHEET 1 OF 3 | REV J

LOC AA
DIST 22

3308-8 (3/11)

THIS INFORMATION IS CONFIDENTIAL AND PROPRIETARY TO TYCO ELECTRONICS CORPORATION. NO PART OF THIS DOCUMENT MAY BE REPRODUCED OR TRANSMITTED IN ANY FORM OR BY ANY MEANS, ELECTRONIC OR MECHANICAL, FOR ANY PURPOSE, WITHOUT THE EXPRESS WRITTEN PERMISSION OF TYCO ELECTRONICS CORPORATION. IT MAY NOT BE DISCLOSED TO ANYONE, OTHER THAN TE PERSONNEL, WITHOUT AUTHORIZATION FROM TE. www.te.com.

Pro/ENGINEER DRAWING

USED ON -

DWG NO 6368011

THIS DRAWING IS A CONTROLLED DOCUMENT

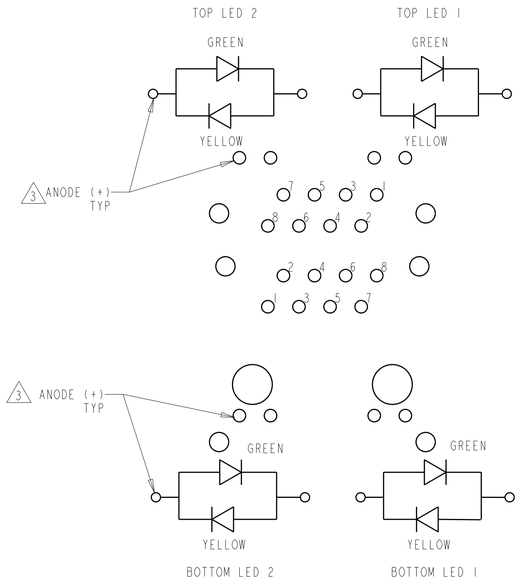

SCHEMATIC FOR 1-6368011-1
SCALE 4:1

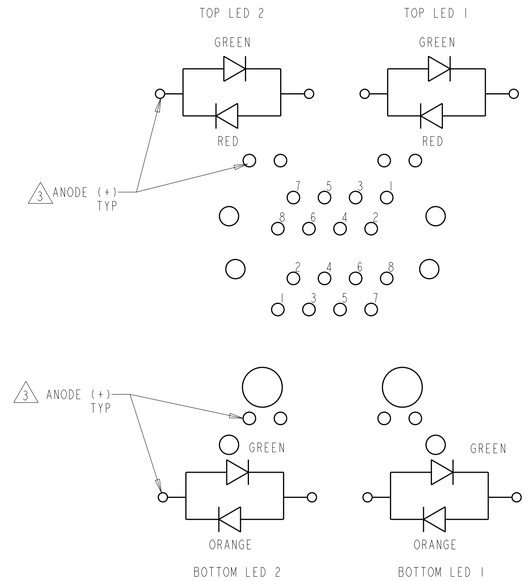

SCHEMATIC FOR 1-6368011-0
SCALE 4:1

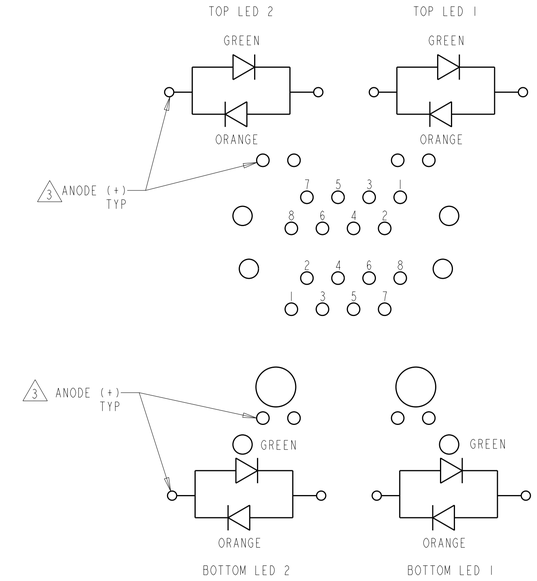

SCHEMATIC FOR 6368011-4
SCALE 4:1

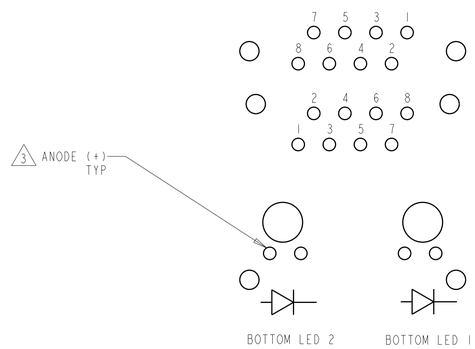

SCHEMATIC FOR 6368011-7,1-6368011-3

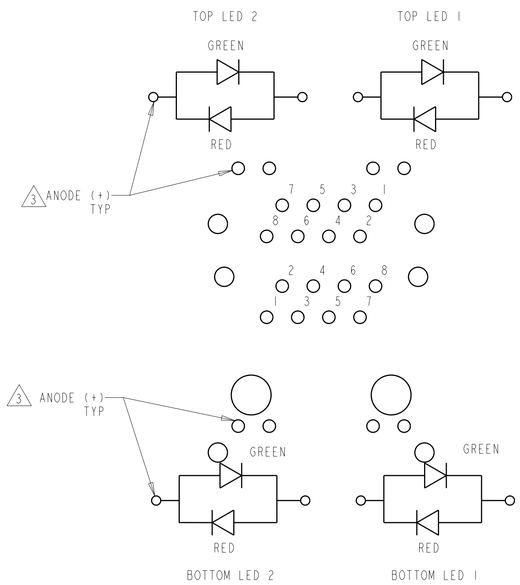

SCHEMATIC FOR 6368011-9
SCALE 4:1

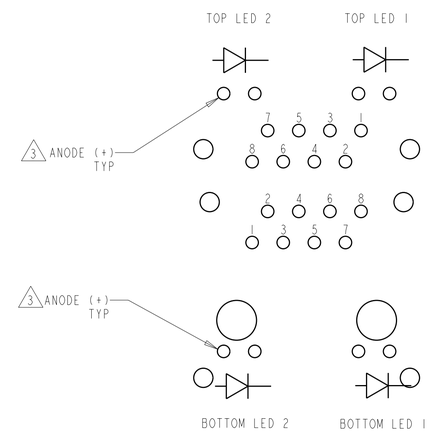

SCHEMATIC FOR 6368011-1, ~~-2~~, -3, -5, ~~-6~~, -8, 14
SCALE 4:1

P	LTR	REVISION RECORD	DATE	DWN	APVD
	-	SEE SHEET 1	-	-	-

DIMENSIONS: mm

TOLERANCES UNLESS OTHERWISE SPECIFIED:
0 PLC ±-
1 PLC ±-
2 PLC ±0.25
3 PLC ±0.25
4 PLC ±-
ANGLES± -
SURFACE TEXTURE -

DWN 13APR2005 Vic Slack/L.A.MAYER
CHK 13APR2005 J.WESTMAN
APVD 13APR2005 S.FLICKINGER

MATERIAL SEE NOTE 1
HEAT TREAT - -

TE Connectivity

NAME MODULAR JACK ASSEMBLY,STACKED, 2 X 1, 8 POSITION, SHIELDED,

SCALE 1:1 | SIZE A1 | DRAWING NO 6368011 | SHEET 2 OF 3 | REV J

LOC AA
DIST 22

3308-8 (3/11)

THIS INFORMATION IS CONFIDENTIAL AND PROPRIETARY TO TYCO ELECTRONICS CORPORATION
OF ITS SUBSIDIARIES AND AFFILIATES. IT MAY NOT BE DISCLOSED TO ANYONE,
OTHER THAN TE PERSONNEL, WITHOUT AUTHORIZATION FROM TE (www.te.com).

DWG NO 6368011

THIS DRAWING IS A CONTROLLED DOCUMENT

USED ON

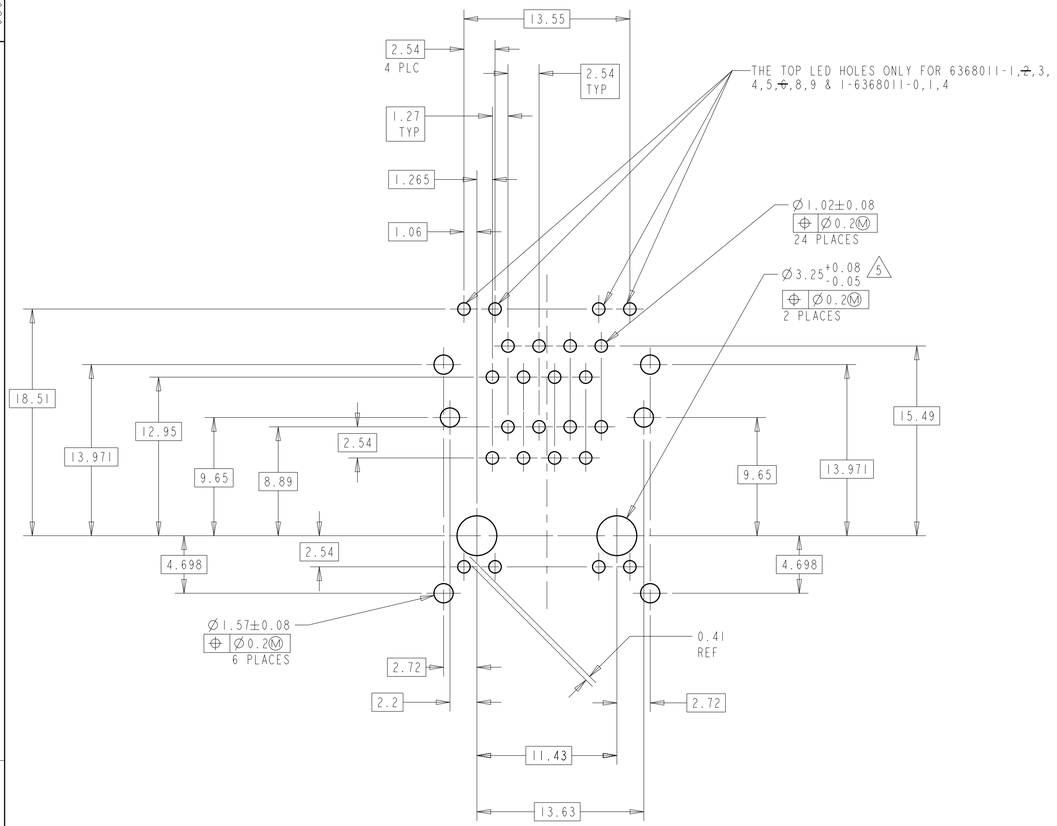

PC BOARD LAYOUT VIEWED FROM COMPONENT SIDE OF BOARD
SCALE 4:1

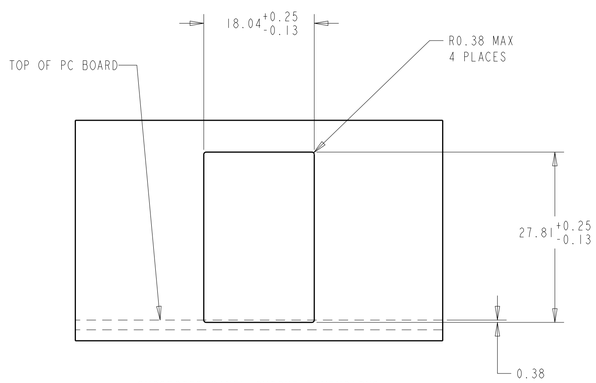

SUGGESTED PANEL CUTOUT DIMENSIONS
SCALE 2:1

P	LTR	REVISION RECORD	DATE	DWN	APVD
	-	SEE SHEET 1	-	-	-

DIMENSIONS: mm

TOLERANCES UNLESS OTHERWISE SPECIFIED:
0 PLC ±-
1 PLC ±-
2 PLC ±0.25
3 PLC ±0.25
4 PLC ±-
ANGLES± -
SURFACE TEXTURE √

DWN	13APR2005 Vic Slack/L.A.MAYER	MATERIAL SEE NOTE 1
CHK	13APR2005 J.WESTMAN	HEAT TREAT - -
APVD	13APR2005 S.FLICKINGER	TE Connectivity
NAME	MODULAR JACK ASSEMBLY,STACKED, 2 X 1, 8 POSITION, SHIELDED,	
SCALE 1:1	SIZE A1	DRAWING NO 6368011
SHEET 3 OF 3	REV J	

LOC AA
DIST 22

3308-8 (3/11)

THIS INFORMATION IS CONFIDENTIAL AND PROPRIETARY TO TYCO ELECTRONICS CORPORATION
OTHER THAN TYCO ELECTRONICS SUBSIDIARIES AND AFFILIATES, IT SHALL NOT BE DISCLOSED TO ANYONE
OTHER THAN TE PERSONNEL, WITHOUT AUTHORIZATION FROM TE. www.te.com.

ООО «ЛайфЭлектроникс» “LifeElectronics” LLC

ИНН 7805602321 КПП 780501001 Р/С 40702810122510004610 ФАКБ "АБСОЛЮТ БАНК" (ЗАО) в г.Санкт-Петербурге К/С 30101810900000000703 БИК 044030703

Компания «Life Electronics» занимается поставками электронных компонентов импортного и отечественного производства от производителей и со складов крупных дистрибьюторов Европы, Америки и Азии.

С конца 2013 года компания активно расширяет линейку поставок компонентов по направлению коаксиальный кабель, кварцевые генераторы и конденсаторы (керамические, пленочные, электролитические), за счёт заключения дистрибьюторских договоров

Мы предлагаем:

- *Конкурентоспособные цены и скидки постоянным клиентам.*
- *Специальные условия для постоянных клиентов.*
- *Подбор аналогов.*
- *Поставку компонентов в любых объемах, удовлетворяющих вашим потребностям.*

- *Приемлемые сроки поставки, возможна ускоренная поставка.*
- *Доставку товара в любую точку России и стран СНГ.*
- *Комплексную поставку.*
- *Работу по проектам и поставку образцов.*
- *Формирование склада под заказчика.*

- *Сертификаты соответствия на поставляемую продукцию (по желанию клиента).*
- *Тестирование поставляемой продукции.*
- *Поставку компонентов, требующих военную и космическую приемку.*
- *Входной контроль качества.*
- *Наличие сертификата ISO.*

В составе нашей компании организован Конструкторский отдел, призванный помогать разработчикам, и инженерам.

Конструкторский отдел помогает осуществить:

- *Регистрацию проекта у производителя компонентов.*
- *Техническую поддержку проекта.*
- *Защиту от снятия компонента с производства.*
- *Оценку стоимости проекта по компонентам.*
- *Изготовление тестовой платы монтаж и пусконаладочные работы.*

Тел: +7 (812) 336 43 04 (многоканальный)
Email: org@lifeelectronics.ru

www.lifeelectronics.ru