1 GBPS TO 4.25 GBPS MULTI-RATE VCSEL DRIVER

FEATURES

- **Multi-Rate Operation from 1 Gbps Up To 4.25 Gbps**
- **2-Wire Digital Interface**
- **Digitally Selectable Modulation Current**
- **Digitally Selectable Bias Current**
- **Automatic Power Control (APC) Loop**
- **Supports Transceiver Management System (TMS)**
- **Includes Laser Safety Features**
- **Analog Temperature Sensor Output**
- **Single 3.3-V Supply**
- **Operating Temperature –40°C to 85°C**
- **Small Footprint Surface Mount 4 mm × 4 mm, 20-Pin QFN Package**

APPLICATIONS

- **Multirate SFP/SFF Modules**
- **1.0625 Gbps, 2.125 Gbps, and 4.25 Gbps Fibre Channel Transmitters**
- **Gigabit Ethernet Transmitters**

DESCRIPTION

The ONET4291VA is a versatile high-speed multi-rate VCSEL driver for fiber optic applications with data rates up to 4.25 Gbps.

The device provides a 2-wire interface which allows digital control of the modulation and bias currents, eliminating the need for of external components.

The ONET4291VA includes an integrated automatic power control loop as well as circuitry to support laser safety and transceiver management systems.

The part is available in a small footprint 4 mm × 4 mm 20-pin QFN package and it requires a single 3.3-V supply.

This power efficient multi-rate VCSEL driver is characterized for operation from –40°C to 85°C ambient temperature.

BLOCK DIAGRAM

A simplified block diagram of the ONET4291VA is shown in Figure 1.

This compact, low power 1-Gbps to 4.25-Gbps multi-rate VCSEL driver consists of a high-speed current modulator, a modulation current generator, power-on reset circuitry, a 2-wire interface and control logic block, a bias current generator and automatic power control loop, and an analog reference block.

Please be aware that an important notice concerning availability, standard warranty, and use in critical applications of Texas Instruments semiconductor products and disclaimers thereto appears at the end of this data sheet.

PRODUCTION DATA information is current as of publication date. Products conform to specifications per the terms of the Texas Instruments standard warranty. Production processing does not necessarily include testing of all parameters.

Copyright © 2005, Texas Instruments Incorporated

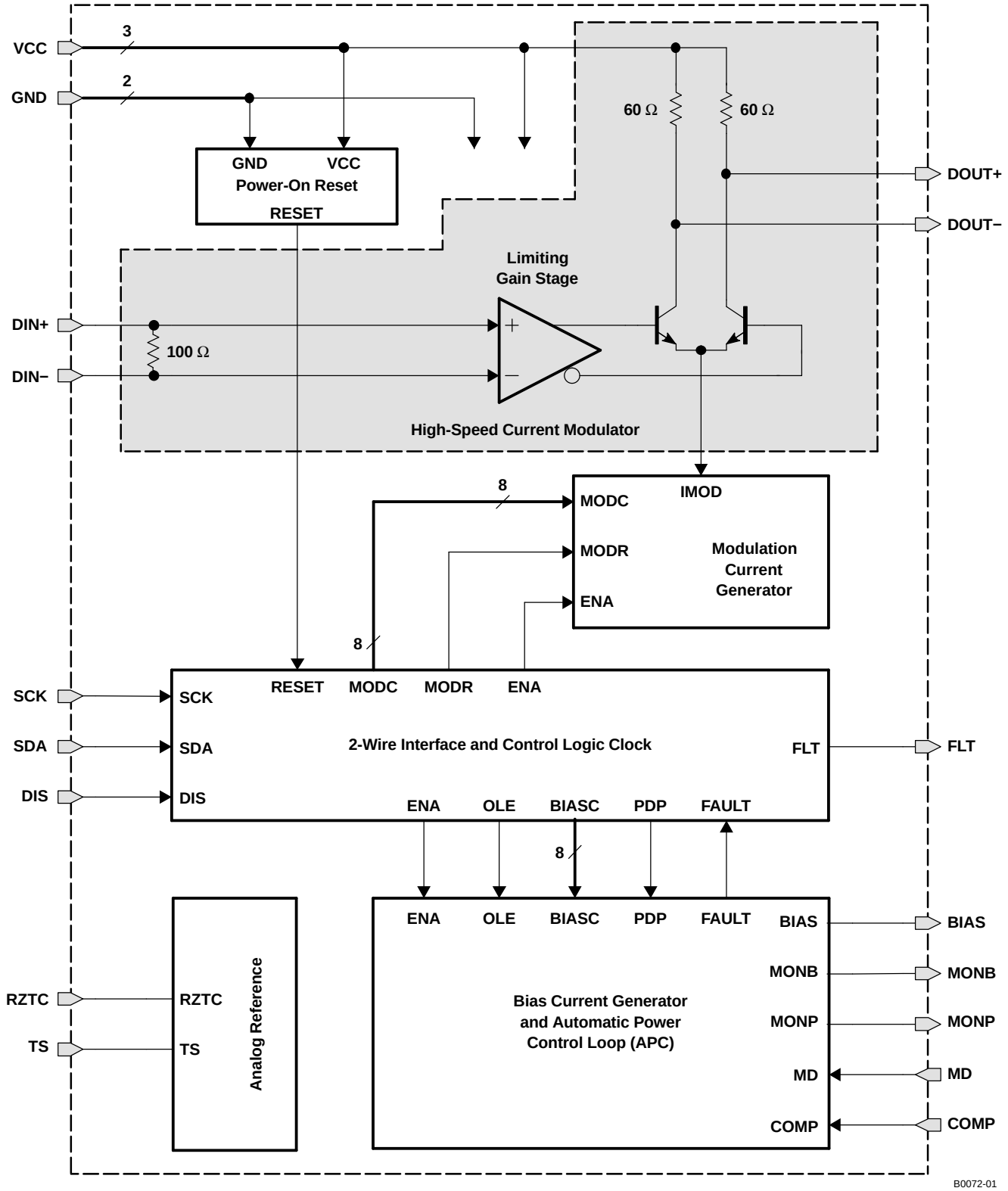

Figure 1. Simplified Block Diagram of the ONET4291VA

HIGH-SPEED CURRENT MODULATOR

The data signal is applied to the high-speed current modulator by means of the input signal pins DIN+/DIN–, which provide on-chip differential 100-Ω line-termination. The succeeding limiting gain stage ensures sufficient drive amplitude and edge-speed for driving the current modulator differential pair.

The modulation current is sunk from the common emitter node of the differential pair by means of a modulation current generator, which is digitally controlled by the 2-wire interface and control logic block.

The collector nodes of the differential pair are connected to the output pins DOUT+/DOUT–, which include on-chip 2 × 60-Ω back-termination to VCC. The 60-Ω back-termination helps to sufficiently suppress signal distortion caused by double reflections for VCSEL diodes with impedances ranging from 50 Ω through 75 Ω.

MODULATION CURRENT GENERATOR

The modulation current generator provides the current for the current modulator described above. The circuit is digitally controlled by the 2-wire interface and control logic block.

An 8-bit wide control bus, MODC, is used to set the desired modulation current.

Furthermore, two modulation current ranges are selected by means of the MODR signal.

The ENA signal enables or disables the modulation current generator.

The modulation current can be disabled by setting the DIS input pin to a high level. The modulation current is also disabled in a fault condition if the fault detection enable register flag FLTEN is set.

For more information about the register functionality, see the register mapping description.

2-WIRE SERIAL INTERFACE AND CONTROL LOGIC

The ONET4291VA uses a 2-wire serial interface for digital control. A simplified block diagram of this interface is shown in Figure 2.

The two circuit inputs, SDA and SCK, are driven, respectively, by the serial data and serial clock from a microprocessor, for example. Both inputs include 100-kΩ pullup resistors to VCC. For driving these inputs, an open drain output is recommended.

A write cycle consists of a START command, three address bits with MSB first, eight data bits with MSB first, and a STOP command. In idle mode, both SDA and SCK lines are at a high level.

A START command is initiated by the falling edge of SDA with SCK at a high level, transitioning to a low level.

Bits are clocked into an 11-bit wide shift register during the high level of the system clock SCK.

A STOP command is detected on the rising edge of SDA after SCK has changed from a low to a high level.

At the time of detection of a STOP command, the eight data bits from the shift register are copied to a selected 8-bit register. Register selection occurs according to the three address bits in the shift register, which are decoded to eight independent select signals using a 3 to 8 decoder block.

In the ONET4291VA, only addresses 0 (000b) through 3 (011b) are used.

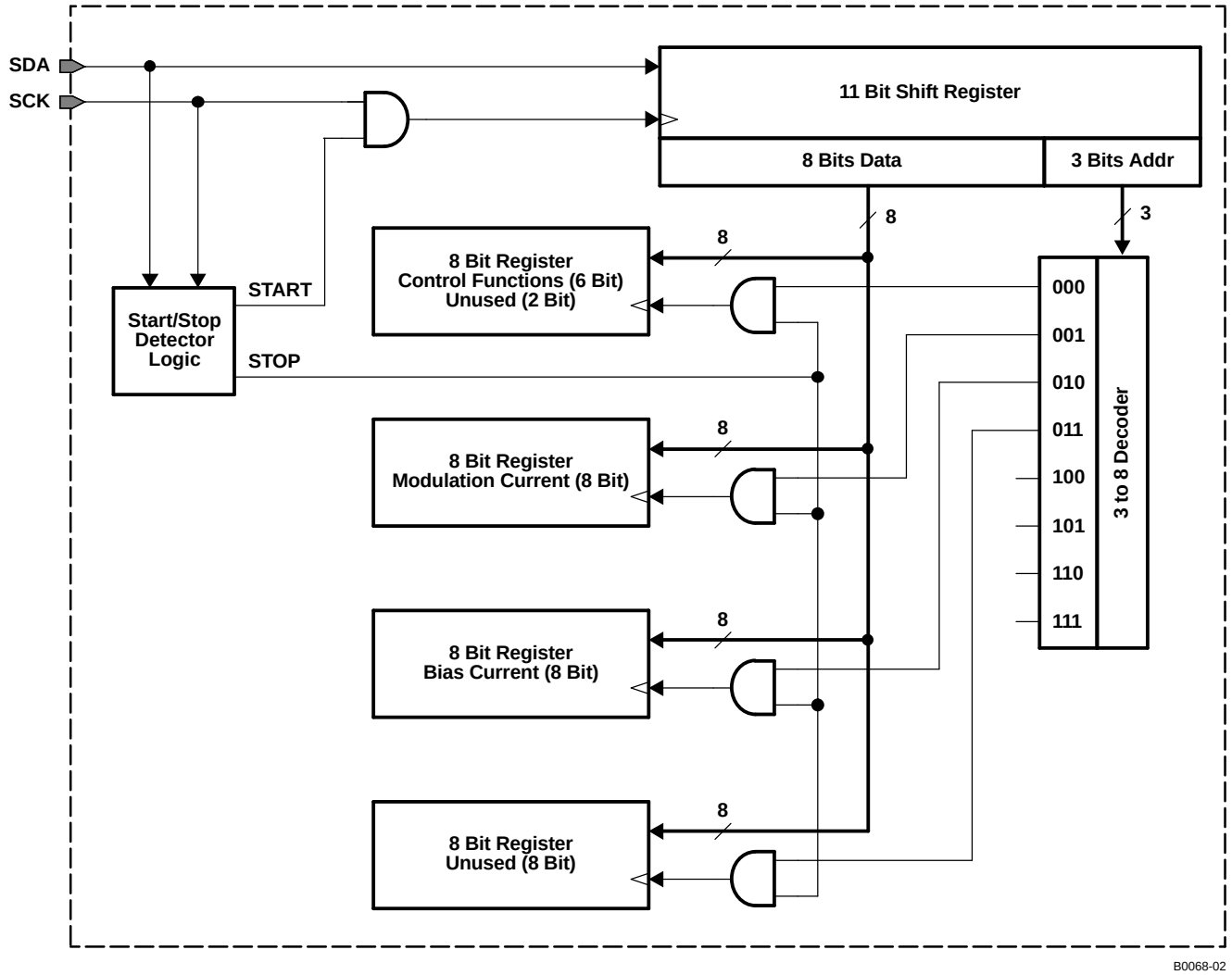

Figure 2. Simplified 2-Wire Interface Block Diagram

The timing definition for the serial data signal SDA and the serial clock signal SCK is shown in Figure 3. The corresponding timing requirements are listed in Table 1.

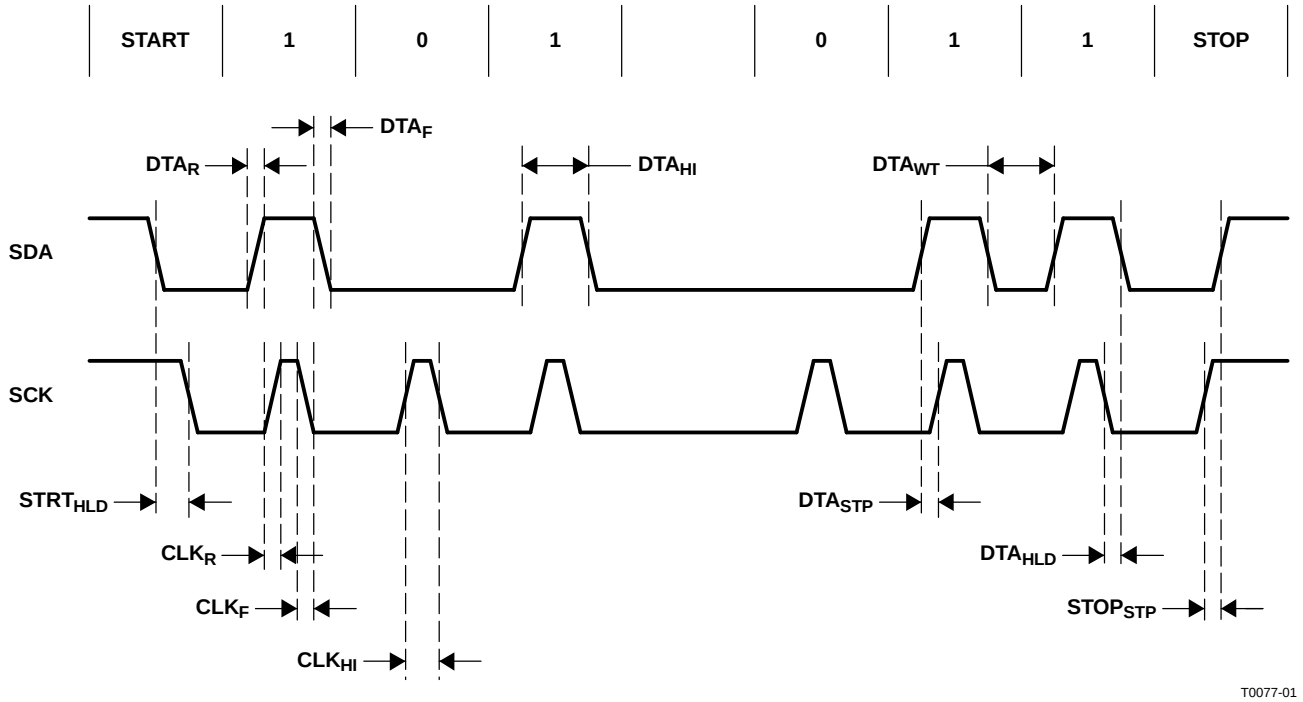

Figure 3. 2-Wire Interface Timing Diagram

Table 1. 2-Wire Interface Timing

PARAMETER		DESCRIPTION	MIN	MAX	UNIT
$STRT_{HLD}$	START hold time	Time required from data falling edge to clock falling edge at START	10		ns
CLK_R, DTA_R	Clock and data rise time	Clock and data rise time		10	ns
CLK_F, DTA_F	Clock and data fall time	Clock and data fall time		10	ns
CLK_{HI}	Clock high time	Minimum clock high period	50		ns
DTA_{HI}	Data high time	Minimum data high period	100		ns
DTA_{STP}	Data setup time	Minimum time from data rising edge to clock rising edge	10		ns
DTA_{WT}	Data wait time	Minimum time from data falling edge to data rising edge	50		ns
DTA_{HLD}	Data hold time	Minimum time from clock falling edge to data falling edge	10		ns
$STOP_{STP}$	STOP setup time	Minimum time from clock rising edge to data rising edge at STOP	10		ns

REGISTER MAPPING

The register mapping for the register addresses 0 (000b) through 3 (011b) are shown in Table 2 to Table 5. Register 3 is included for future enhancements. It is not used in the current device.

Table 6 describes the circuit functionality based on the register settings.

Table 2. Register 0 (000b) Mapping

address 0 (000b)							
bit 7	**bit 6**	**bit 5**	**bit 4**	**bit 3**	**bit 2**	**bit 1**	**bit 0**
ENA	PDP	PDR	OLE	FLTEN	MODR	–	–

Table 3. Register 1 (001b) Mapping

address 1 (001b)							
bit 7	**bit 6**	**bit 5**	**bit 4**	**bit 3**	**bit 2**	**bit 1**	**bit 0**
MODC7	MODC6	MODC5	MODC4	MODC3	MODC2	MODC1	MODC0

Table 4. Register 2 (010b) Mapping

address 2 (010b)							
bit 7	**bit 6**	**bit 5**	**bit 4**	**bit 3**	**bit 2**	**bit 1**	**bit 0**
BIASC7	BIASC6	BIASC5	BIASC4	BIASC3	BIASC2	BIASC1	BIASC0

Table 5. Register 3 (011b) Mapping

address 3 (011b)							
bit 7	**bit 6**	**bit 5**	**bit 4**	**bit 3**	**bit 2**	**bit 1**	**bit 0**
–	–	–	–	–	–	–	–

Table 6. Register Functionality

Symbol	Register	Function
ENA	Enable	Enables chip when set to 1. Can be toggled to reset a fault condition.
PDP	Photodiode polarity	Photodiode polarity bit: 1 = common anode 0 = common cathode
PDR	Photodiode current range	Photodiode current range bit: 1 = 0 µA – 500 µA with 2-µA resolution 0 = 0 µA – 250 µA with 1-µA resolution
OLE	Open loop enable	Open loop enable bit: 1 = open loop bias current control 0 = closed loop bias current control
FLTEN	Fault detection enable	Fault detection enable bit: 1 = fault detection on 0 = fault detection off
MODR	Modulation current range	Laser modulation current range: 1 = 0 mA – 15 mA 0 = 0 mA – 12 mA
MODC7	Modulation current bit 7 (MSB)	Modulation current setting:
MODC6	Modulation current bit 6	
MODC5	Modulation current bit 5	MODR = 1 (see above):
MODC4	Modulation current bit 4	Modulation current: 100 µA – 15.4 mA with 68 µA step size
MODC3	Modulation current bit 3	
MODC2	Modulation current bit 2	MODR = 0 (see above):
MODC1	Modulation current bit 1	Modulation current: 100 µA – 12 mA with 51 µA step size
MODC0	Modulation current bit 0 (LSB)	
BIASC7	Bias current bit 7 (MSB)	**closed loop (APC):**
BIASC6	Bias current bit 6	Coupling ratio CR between VCSEL bias current and photodiode current is:
BIASC5	Bias current bit 5	$CR = I_{BIAS\text{-}VCSEL} / I_{PD}$
BIASC4	Bias current bit 4	PDR = 0 (see above), BIASC = 0 .. 255, $I_{BIAS\text{-}VCSEL} \leq 12$ mA:
BIASC3	Bias current bit 3	$I_{BIAS\text{-}VCSEL} = 100\ \mu A + (1\ \mu A \times CR \times BIASC)$
BIASC2	Bias current bit 2	PDR = 1 (see above), BIASC = 0 .. 255, $I_{BIAS\text{-}VCSEL} \leq 12$ mA:
BIASC1	Bias current bit 1	$I_{BIAS\text{-}VCSEL} = 100\ \mu A + (2\ \mu A \times CR \times BIASC)$
BIASC0	Bias current bit 0 (LSB)	**open loop:** $I_{BIAS\text{-}VCSEL} = 100\ \mu A + (47\ \mu A \times BIASC)$

BIAS CURRENT GENERATION AND APC LOOP

The bias current generation and APC loop are controlled by means of the 2-wire interface.

In open loop operation, selected by setting OLE = 1 (bit 4 of register 0), the bias current is set directly by the 8-bit wide control word BIASC[0..7] (register 2).

In automatic power control mode, selected by setting OLE = 0, the bias current depends on the register settings BIASC[0..7] and the coupling ratio (CR) between the VCSEL bias current and the photodiode current. $CR = I_{BIAS\text{-}VCSEL} / I_{PD}$.

Two photodiode current ranges can be selected by means of the PDR register (bit 5 of register 0). The photodiode range should be chosen to keep the laser bias control DAC close to the center of its range. This keeps the laser bias current setpoint resolution high and the loop settling time constant within specification.

For details regarding the bias current setting in open loop as well as in closed loop mode, see Table 6.

In closed loop mode, the photodiode polarity bit, PDP, must be set for common anode or common cathode configuration to ensure proper operation. In open loop mode if a photodiode is still present, the photodiode polarity bit must be set to the opposite setting.

ANALOG REFERENCE

The ONET4291VA is supplied by a single 3.3-V ±10% supply voltage connected to the VCC pins. This voltage is referenced to ground (GND).

On-chip bandgap voltage circuitry generates a reference voltage, independent of the supply voltage, from which all other internally required voltages and bias currents are derived.

An external zero temperature coefficient resistor must be connected from the RZTC pin of the device to ground (GND). This resistor is used to generate a precise zero TC current which is used as a reference current for the on-chip DACs.

In order to minimize the module component count, the ONET4291VA VCSEL driver provides an on-chip temperature sensor. The output voltage of the temperature sensor is available at the TS pin.

The voltage is $V_{TS} = 9.4\ mV \times TEMP + 1337\ mV$ with TEMP given in °C.

Note that the voltage at TS is not buffered. As a result, TS can only drive capacitive loads.

POWER-ON RESET AND REGISTER LOADING SEQUENCE

The ONET4291VA has power on reset circuitry which ensures that all registers are reset to zero during startup. After the power-on to initialize time (T_{INIT1}), the internal registers are ready to be loaded. It is important that the registers are loaded in the following order:

1. Bias current register (register 2, 010b),
2. Modulation current register (register 1, 001b),
3. Control register (register 0, 000b).

The part will be ready to transmit data after the initialize to transmit time T_{INIT2}, assuming that the control register enable bit ENA is 1 and the disable pin DIS is low.

The ONET4291VA can be disabled using either the ENA control register bit or the disable pin DIS. In both cases the internal registers are not reset. After the disable pin DIS is de-asserted and/or the enable bit ENA is re-asserted the part returns to its prior output settings.

LASER SAFETY FEATURES AND FAULT RECOVERY PROCEDURE

The ONET4291VA provides built in laser safety features. The following fault conditions are detected:

1. Voltage at MONB exceeds 1.2 V,
2. Photodiode current exceeds 150% of its target value,
3. Bias control DAC drops in value by more than 33% in one step.

If one or more fault conditions occur and the fault enable bit FLTEN is set to 1, the ONET4192VA responds by:

1. Setting the VCSEL bias current to zero.

2. Setting the modulation current to zero.
3. Asserting and latching the FLT pin.

Fault recovery is performed by the following procedure:

1. The disable pin DIS and/or the enable control bit ENA are toggled for at least the fault latch reset time T_{RESET}.
2. The FLT pin de-asserts while the disable pin DIS is asserted or the enable bit ENA is de-asserted.
3. If the fault condition is no longer present, the part will return to normal operation with its prior output settings after the disable negate time T_{ON}.
4. If the fault condition is still present, FLT re-asserts once DIS is set to low level and the part will not return to normal operation.

PACKAGE

For the ONET4291VA, a small footprint 4 mm × 4 mm 20-pin QFN package with a lead pitch of 0,5 mm is used. The pin out is shown in Figure 4.

RGP PACKAGE
(TOP VIEW)

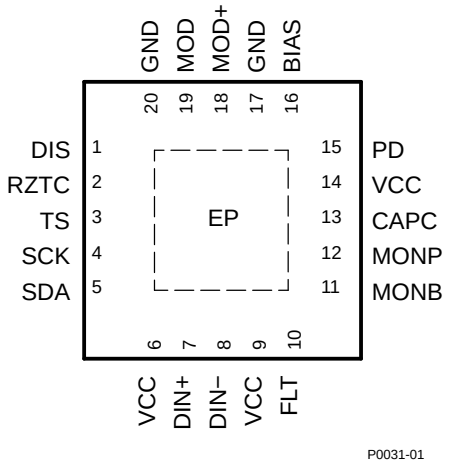

Figure 4. Pinout of ONET4291VA in a 4 mm × 4 mm 20-Pin QFN Package

TERMINAL FUNCTIONS

TERMINAL		TYPE	DESCRIPTION
NO.	NAME		
1	DIS	CMOS-in	Disables both bias and modulation current when set to high state. Toggle to reset a fault condition
2	RZTC	Analog	Connect external zero TC 30-kΩ to ground (GND). Used to generate a defined zero TC reference current for internal DACs.
3	TS	Analog-out	Temperature sensor output. Not buffered, capacitive load only.
4	SCK	CMOS-in	2-wire interface serial clock. Includes a 100-kΩ pullup resistor to VCC.
5	SDA	CMOS-in	2-wire interface serial data input. Includes a 100-kΩ pullup resistor to VCC.
6, 9, 14	VCC	Supply	3.3-V ±10% supply voltage
7	DIN+	Analog-in	Non-inverted data input. On-chip differentially 100-Ω terminated to DIN–. Must be ac coupled.
8	DIN–	Analog-in	Inverted data input. On-chip differentially 100-Ω terminated to DIN+. Must be ac coupled.
10	FLT	CMOS-out	Fault detection flag
11	MONB	Analog-out	Bias current monitor. Sources an 8.3% replica of the bias current. Connect an external resistor to ground (GND). If the voltage at this pin exceeds 1.2 V a fault is triggered.

TERMINAL FUNCTIONS (continued)

TERMINAL		TYPE	DESCRIPTION
NO.	NAME		
12	MONP	Analog-out	Photodiode current monitor. Sources a 50% replica of the photodiode current. Connect an external resistor to ground (GND).
13	CAPC	Analog	Compensation pin used to control the bandwidth of the APC loop. Connect a 0.01-µF capacitor to ground.
15	PD	Analog	Monitor photodiode input. The pin can source or sink current dependent on PDP register setting. Pin supplies >1.5-V reverse bias.
16	BIAS	Analog	VCSEL diode bias current source. Connect to laser anode through inductor. Murata BLM15HG102SN1 is recommended.
17, 20, EP	GND	Supply	Circuit ground. The exposed die pad (EP) must be grounded.
18	MOD+	CML-out	Non-inverted modulation current output. AC coupled to anode of common cathode VCSEL. On-chip 60-Ω back-terminated to VCC.
19	MOD–	CML-out	Inverted modulation current output. AC coupled through VCSEL matching resistor to ground (GND). On-chip 60-Ω back-terminated to VCC.

ABSOLUTE MAXIMUM RATINGS(1)

over operating free-air temperature range (unless otherwise noted)

		VALUE / UNIT
V_{CC}	Supply voltage	–0.3 V to 4 V
V_{DIS}, V_{RZTC}, V_{TS}, V_{SCK}, V_{SDA}, V_{DIN+}, V_{DIN-}, V_{FLT}, V_{MONB}, V_{MONP}, V_{CAPC}, V_{PD}, V_{BIAS}, V_{MOD+}, V_{MOD-}	Voltage at DIS, RZTC, TS, SCK, SDA, DIN+, DIN–, FLT, MONB, MONP, CAPC, PD, BIAS, MOD+, MOD–(2)	–0.3 V to 4 V
ESD	ESD rating at all pins	3 kV (HBM)
$T_{J,max}$	Maximum junction temperature	125°C
T_{STG}	Storage temperature range	–65°C to 85°C
T_A	Characterized free-air operating temperature range	–40°C to 85°C
T_{LEAD}	Lead temperature 1,6 mm (1/16 inch) from case for 10 seconds	260°C

(1) Stresses beyond those listed under *absolute maximum ratings* may cause permanent damage to the device. These are stress ratings only, and functional operation of the device at these or any other conditions beyond those indicated under *recommended operating conditions* is not implied. Exposure to absolute–maximum–rated conditions for extended periods may affect device reliability.
(2) All voltage values are with respect to network ground terminal.

RECOMMENDED OPERATING CONDITIONS

PARAMETER		CONDITIONS	MIN	TYP	MAX	UNIT
V_{CC}	Supply voltage		2.9	3.3	3.6	V
V_{IH}	CMOS input high voltage	DIS, SCK, SDA	2			V
V_{IL}	CMOS input low voltage	DIS, SCK, SDA			0.8	V
	Bias output headroom voltage	V_{CC}– V_{BIAS}, I_{BIAS} = 10 mA	500			mV
	Photodiode current range	Control bit PDR = 1, step size = 2 µA	10		500	µA
		Control bit PDR = 0, step size = 1 µA	5		250	
R_{RZTC}	Zero TC resistor value(1)	1.22-V bias across resistor	29.7	30	30.3	kΩ
V_{IN}	Differential input voltage swing		200	800	2400	mVp-p
t_{R-IN}	Input rise time	20%–80%, f_{BIT} = 1.25 Gbps			160	ps
		20%–80%, f_{BIT}≥ 2.125 Gbps			100	
t_{F-IN}	Input fall time	20%–80%, f_{BIT} = 1.25 Gbps			160	ps
		20%–80%, f_{BIT}≥ 2.125 Gbps			100	
T_A	Operating free-air temperature		–40		85	°C

(1) Changing the value alters DAC ranges.

DC ELECTRICAL CHARACTERISTICS

over recommended operating conditions, all values are for open loop operation, I_{MOD} = 6 mA, I_{BIAS} = 5 mA, and R_{RZTC} = 30 kΩ, unless otherwise noted

PARAMETER		TEST CONDITIONS	MIN	TYP	MAX	UNIT
V_{CC}	Supply voltage		2.9	3.3	3.6	V
I_{VCC}	Supply current	I_{MOD} = 6 mA, I_{BIAS} = 5 mA, including I_{MOD} and I_{BIAS}		40	45	mA
		Disabled, DIS = high and/or control bit ENA = low		22		
R_{IN}	Data input/output resistance	Differential between DIN+/DIN–	85	100	115	Ω
R_{OUT}	Data output/output resistance	Single-ended to VCC	50	60	70	Ω
	CMOS input current	SCK, SDA, 100-kΩ pullup to VCC	–50		10	µA
	CMOS input current	DIS	–10		10	µA
V_{OH}	CMOS output high voltage	FLT, I_{SINK} = 1 mA	2.5			V
V_{OL}	CMOS output low voltage	FLT, I_{SOURCE} = 1 mA			0.5	V
$I_{BIAS-DIS}$	Bias current during disable				100	µA
$I_{BIAS-MIN}$	Minimum bias current	See (1)			0.2	mA
$I_{BIAS-MAX}$	Maximum bias current	DAC set to maximum, closed loop	8.5			mA
		DAC set to maximum, open loop	11			
V_{PD}	Photodiode reverse bias voltage	APC active, I_{PD} = max	1.5	2.1		V
	Photodiode fault current level	Percent of target I_{PD} (2)		150%		
V_{TS}	Temperature sensor voltage range	–40°C to 120°C junction temperature. Capacitive load only. After mid-scale calibration.	0.8		2.5	V
	Temperature sensor accuracy	Mid scale calibration		±3		°C
I_{TS}	Temperature sensor drive current	Source or sink (2)	–10		10	µ A
	Photodiode current monitor ratio	I_{MONP} / I_{PD}, I_{BIAS} > 100 µA	45%	60%	80%	
	Bias current monitor ratio	I_{MONB} / I_{BIAS} (nominal 1/12 = 8.3%)	6.7%	8.3%	10%	
V_{CC-RST}	V_{CC} reset threshold voltage	VCC voltage level which triggers power-on reset	2.4	2.6	2.85	V
$V_{CC-RSTHYS}$	VCC reset threshold voltage hysteresis			120		mV
$V_{MONB-FLT}$	Fault voltage at MONB	Fault occurs if voltage at MONB exceeds value	1.05	1.2	1.45	V

(1) The bias current can be set below the specified minimum according to the corresponding register setting described in the register mapping section above, however in closed loop operation settings below the specified value may trigger a fault.
(2) Assured by simulation over process, supply, and temperature variation.

AC ELECTRICAL CHARACTERISTICS

over recommended operating conditions with 50-Ω output load, open loop operation, I_{MOD} = 6 mA, I_{BIAS} = 5 mA, and R_{RZTC} = 30 kΩ (unless otherwise noted)

PARAMETER		TEST CONDITIONS	MIN	TYP (1)	MAX	UNIT
t_{R-OUT}	Output rise time	20%–80%, t_{R-IN} = 160 ps, single-ended V_{IN} > 400 mV_{pp}		60	125	ps
		20%–80%, t_{R-IN} = 100 ps, single-ended V_{IN} > 400 mV_{pp}		35	100	
t_{F-OUT}	Output fall time	20%–80%, t_{F-IN} = 160 ps, single-ended V_{IN} > 400 mV_{pp}		60	125	ps
		20%–80%, t_{F-IN} = 100 ps, single-ended V_{IN} > 400 mV_{pp}		35	100	
$I_{MOD-MAX}$	Maximum modulation current	Control bit MODR = 1, 50-Ω load	11.5			mA
		Control bit MODR = 0, 50-Ω load	9			
$I_{MOD-STEP}$	Modulation current step size	Control bit MODR = 1, 50-Ω load		68		µA
		Control bit MODR = 0, 50-Ω load		51		
DJ	Deterministic output jitter	f_{BIT} = 4.25 Gbps, excluding DJ caused by duty cycle distortion		7	20	ps_{p-p}
DCD	Duty cycle distortion	f_{BIT} = 4.25 Gbps		8		ps_{p-p}

(1) Typical operating condition is at V_{CC} = 3.3 V and T_A = 25°C.

AC ELECTRICAL CHARACTERISTICS (continued)

over recommended operating conditions with 50-Ω output load, open loop operation, I_{MOD} = 6 mA, I_{BIAS} = 5 mA, and R_{RZTC} = 30 kΩ (unless otherwise noted)

PARAMETER		TEST CONDITIONS	MIN	TYP(1)	MAX	UNIT
τ_{APC}	APC time constant	C_{APC} 0.01 µF, I_{PD} = 100 µA, PD coupling ratio CR = 1/40(2)		200		µs
T_{OFF}	Transmitter disable time	Rising edge of DIS to $I_{BIAS} \leq 0.1 \times I_{BIAS\text{-}NOMINAL}$(2)		2.4	5	µs
T_{ON}	Disable negate time	Falling edge of DIS to $I_{BIAS} \geq 0.9 \times I_{BIAS\text{-}NOMINAL}$(2)			1	ms
T_{INIT1}	Power-on to initialize	Power-on to registers ready to be loaded		20	250	ms
T_{INIT2}	Initialize to transmit	Register load STOP command to part ready to transmit valid data(2)			2	ms
T_{RESET}	DIS pulse width	Time DIS must held high to reset part(2)	100			ns
T_{FAULT}	Fault assert time	Time from fault condition to FLT high(2)			50	µs

(2) Assured by simulation over process, supply, and temperature variation.

TYPICAL CHARACTERISTICS

Typical operating condition is at V_{CC} = 3.3 V and T_A = 25°C (unless otherwise noted)

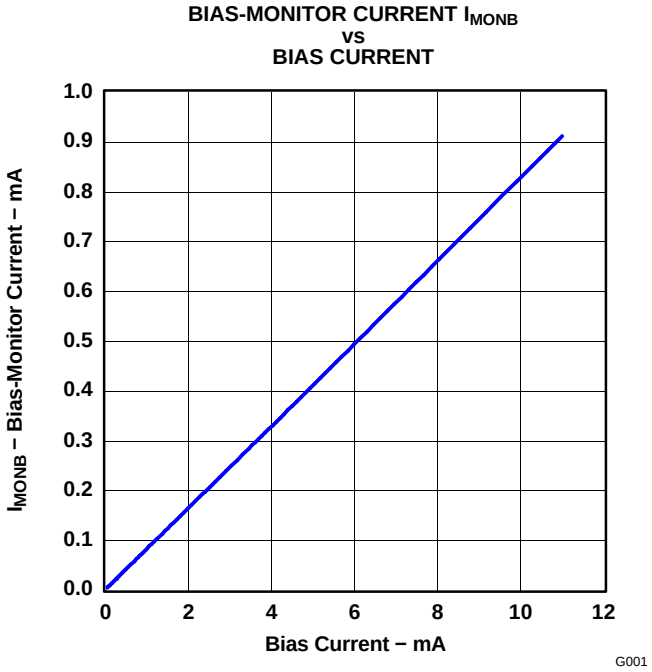

Figure 5.

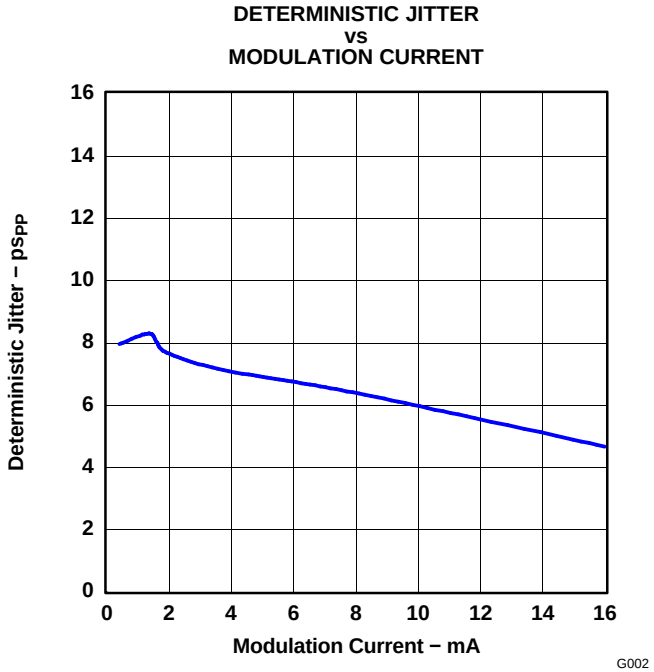

Figure 6.

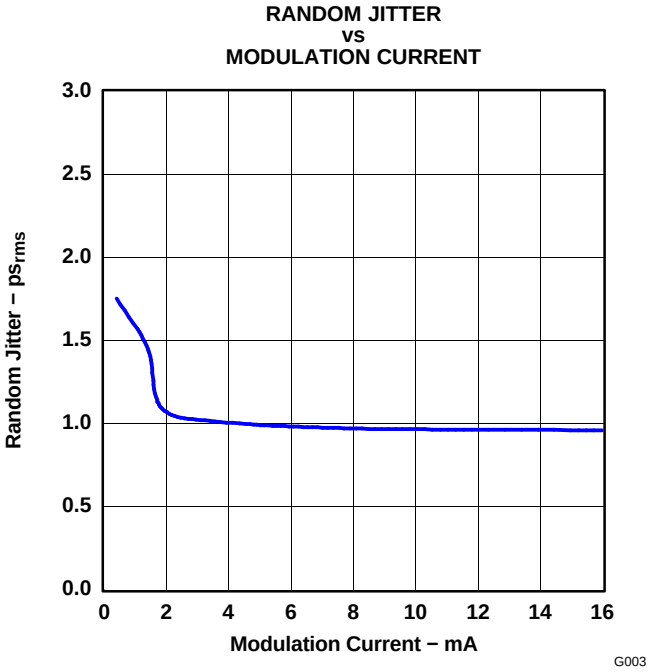

Figure 7.

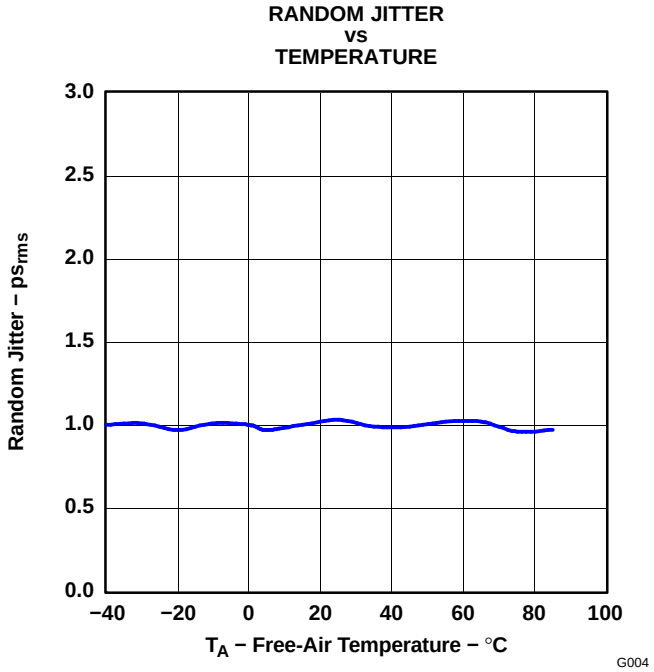

Figure 8.

TYPICAL CHARACTERISTICS (continued)

Typical operating condition is at V_{CC} = 3.3 V and T_A = 25°C (unless otherwise noted)

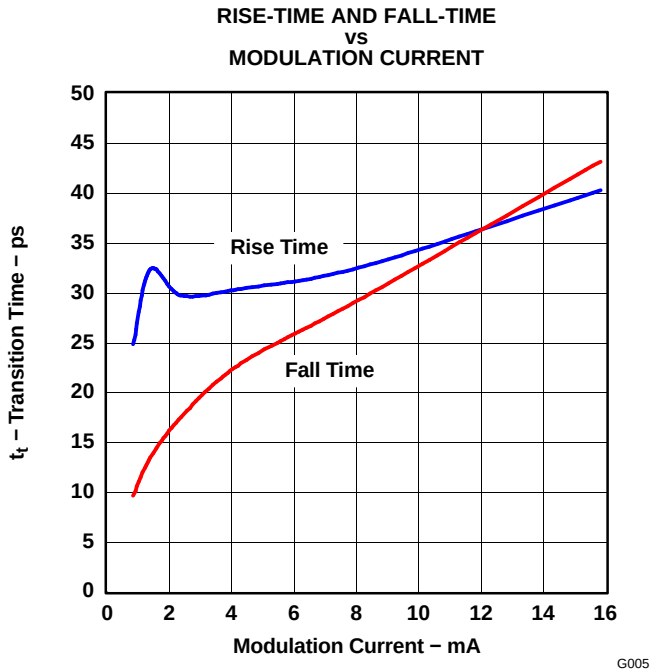

Figure 9.

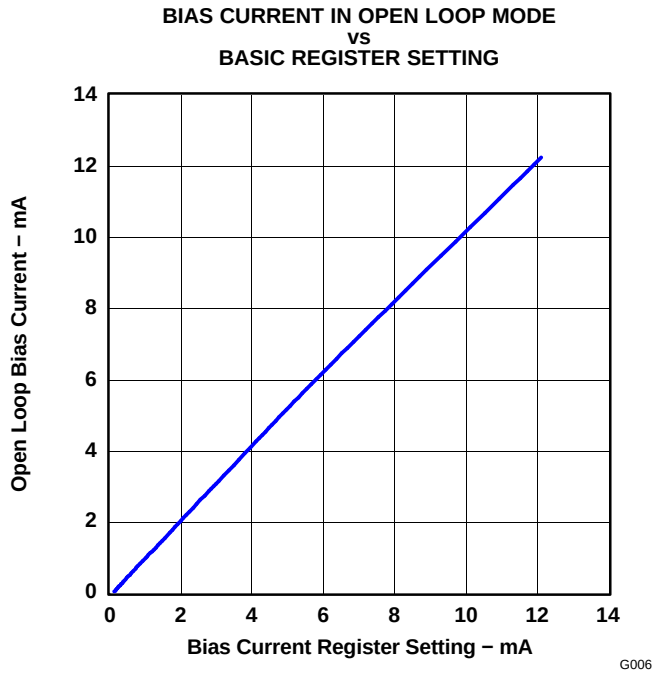

Figure 10.

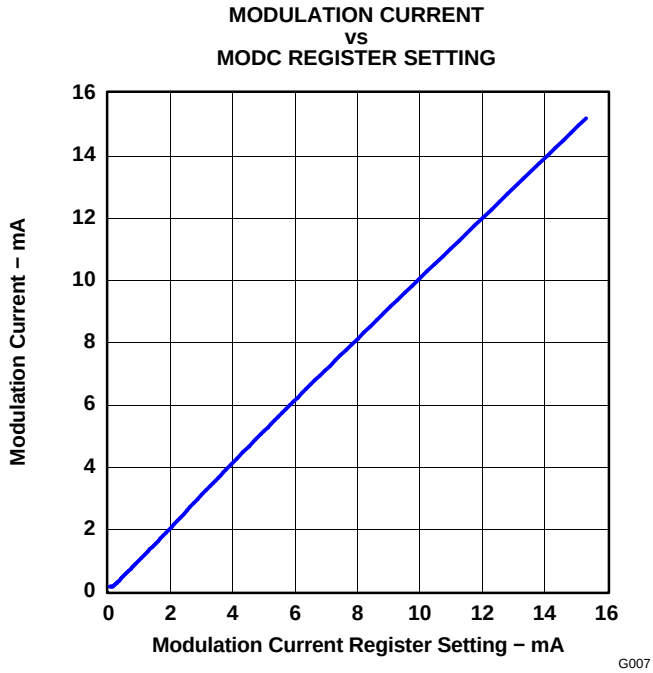

Figure 11.

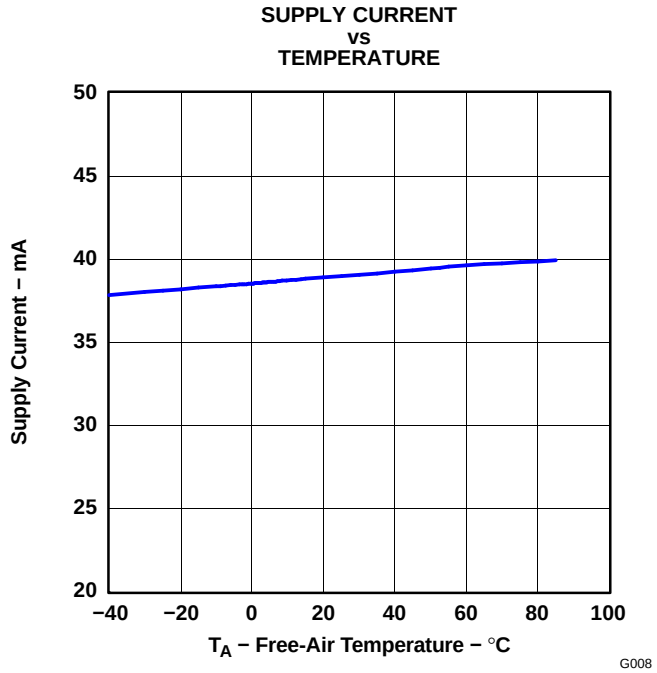

Figure 12.

TYPICAL CHARACTERISTICS (continued)

Typical operating condition is at V_{CC} = 3.3 V and T_A = 25°C (unless otherwise noted)

EYE-DIAGRAM AT 4.25 GBPS
K28.5 PATTERN, I_{MOD} = 5 mA

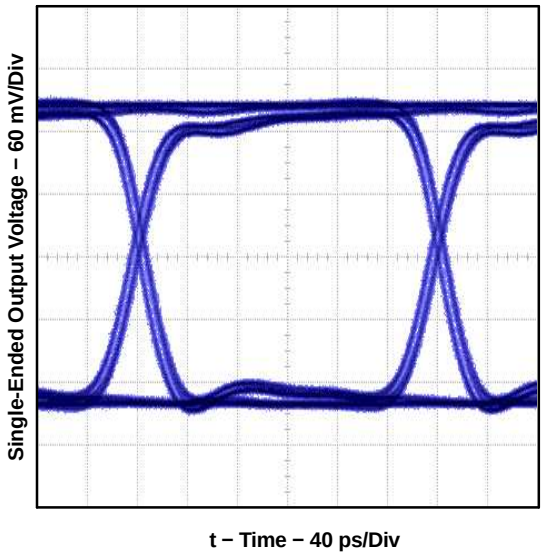

Figure 13.

EYE-DIAGRAM AT 4.25 GBPS
K28.5 PATTERN, I_{MOD} = 10 mA

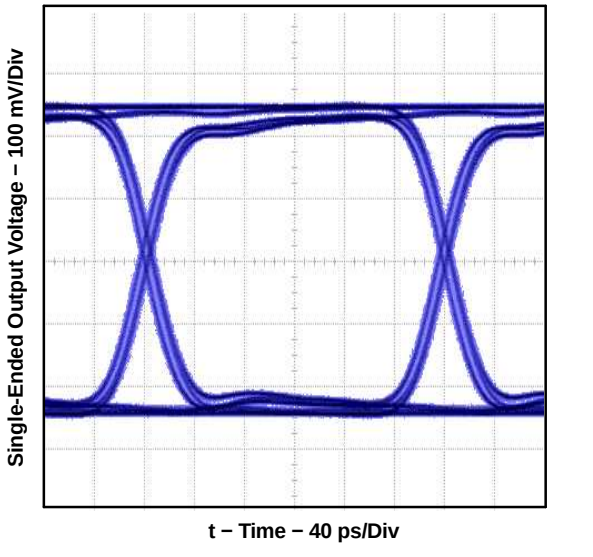

Figure 14.

EYE-DIAGRAM AT 4.25 GBPS
K28.5 PATTERN, I_{MOD} = 15 mA

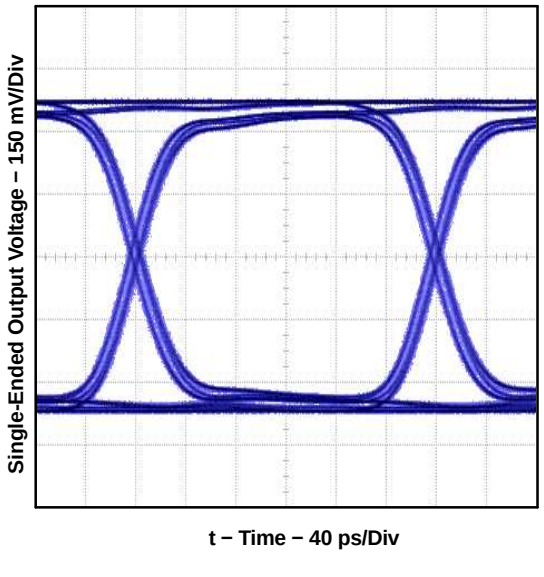

Figure 15.

EYE-DIAGRAM AT 1.0625 GBPS
K28.5 PATTERN, I_{MOD} = 15 mA

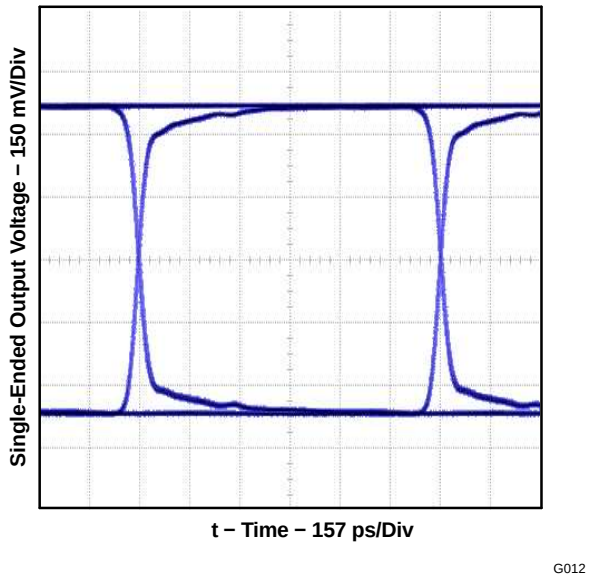

Figure 16.

APPLICATION INFORMATION

Figure 17 shows a typical application circuit using the ONET4291VA with a common cathode VCSEL connected to ground.

The VCSEL driver is controlled via the 2-wire interface SDA/SCK by a microprocessor.

In a typical application, the FLT, MONB, MONP, and TS outputs are connected to the microcontroller for transceiver management purposes.

The component values in Figure 17 are typical examples and may be varied according to the intended application.

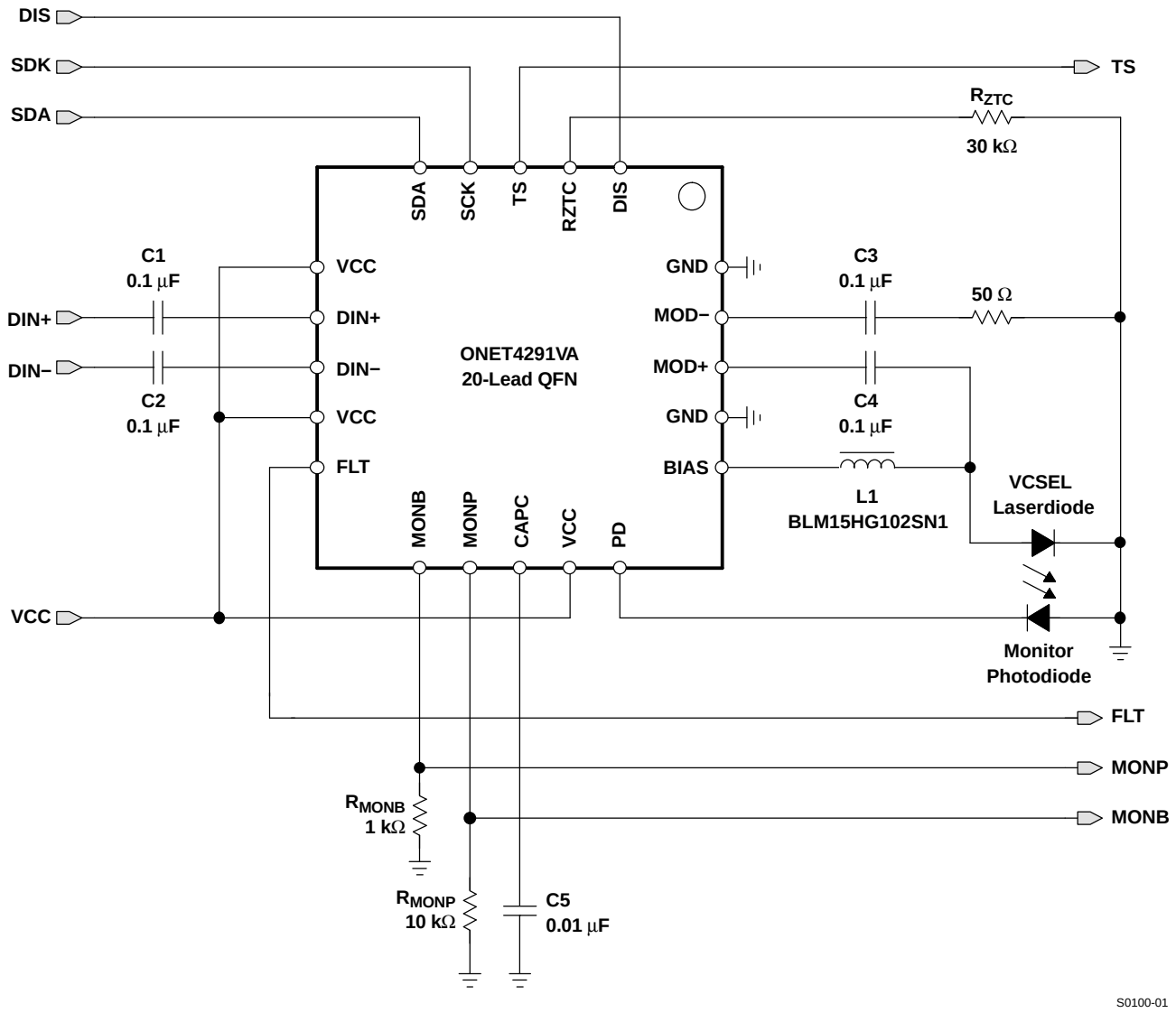

Figure 17. Basic Application Circuit With a Common Cathode VCSEL

PACKAGING INFORMATION

Orderable Device	Status (1)	Package Type	Package Drawing	Pins	Package Qty	Eco Plan (2)	Lead/Ball Finish	MSL Peak Temp (3)	Op Temp (°C)	Top-Side Markings (4)	Samples
ONET4291VARGPR	ACTIVE	QFN	RGP	20	2500	Green (RoHS & no Sb/Br)	CU NIPDAUAG	Level-2-260C-1 YEAR	-40 to 85	ONET 4291V	Samples
ONET4291VARGPRG4	ACTIVE	QFN	RGP	20	2500	Green (RoHS & no Sb/Br)	CU NIPDAUAG	Level-2-260C-1 YEAR	-40 to 85	ONET 4291V	Samples
ONET4291VARGPT	ACTIVE	QFN	RGP	20	250	Green (RoHS & no Sb/Br)	CU NIPDAUAG	Level-2-260C-1 YEAR	-40 to 85	ONET 4291V	Samples
ONET4291VARGPTG4	ACTIVE	QFN	RGP	20	250	Green (RoHS & no Sb/Br)	CU NIPDAUAG	Level-2-260C-1 YEAR	-40 to 85	ONET 4291V	Samples

(1) The marketing status values are defined as follows:
ACTIVE: Product device recommended for new designs.
LIFEBUY: TI has announced that the device will be discontinued, and a lifetime-buy period is in effect.
NRND: Not recommended for new designs. Device is in production to support existing customers, but TI does not recommend using this part in a new design.
PREVIEW: Device has been announced but is not in production. Samples may or may not be available.
OBSOLETE: TI has discontinued the production of the device.

(2) Eco Plan - The planned eco-friendly classification: Pb-Free (RoHS), Pb-Free (RoHS Exempt), or Green (RoHS & no Sb/Br) - please check http://www.ti.com/productcontent for the latest availability information and additional product content details.
TBD: The Pb-Free/Green conversion plan has not been defined.
Pb-Free (RoHS): TI's terms "Lead-Free" or "Pb-Free" mean semiconductor products that are compatible with the current RoHS requirements for all 6 substances, including the requirement that lead not exceed 0.1% by weight in homogeneous materials. Where designed to be soldered at high temperatures, TI Pb-Free products are suitable for use in specified lead-free processes.
Pb-Free (RoHS Exempt): This component has a RoHS exemption for either 1) lead-based flip-chip solder bumps used between the die and package, or 2) lead-based die adhesive used between the die and leadframe. The component is otherwise considered Pb-Free (RoHS compatible) as defined above.
Green (RoHS & no Sb/Br): TI defines "Green" to mean Pb-Free (RoHS compatible), and free of Bromine (Br) and Antimony (Sb) based flame retardants (Br or Sb do not exceed 0.1% by weight in homogeneous material)

(3) MSL, Peak Temp. -- The Moisture Sensitivity Level rating according to the JEDEC industry standard classifications, and peak solder temperature.

(4) Only one of markings shown within the brackets will appear on the physical device.

Important Information and Disclaimer: The information provided on this page represents TI's knowledge and belief as of the date that it is provided. TI bases its knowledge and belief on information provided by third parties, and makes no representation or warranty as to the accuracy of such information. Efforts are underway to better integrate information from third parties. TI has taken and continues to take reasonable steps to provide representative and accurate information but may not have conducted destructive testing or chemical analysis on incoming materials and chemicals. TI and TI suppliers consider certain information to be proprietary, and thus CAS numbers and other limited information may not be available for release.

In no event shall TI's liability arising out of such information exceed the total purchase price of the TI part(s) at issue in this document sold by TI to Customer on an annual basis.

TAPE AND REEL INFORMATION

REEL DIMENSIONS

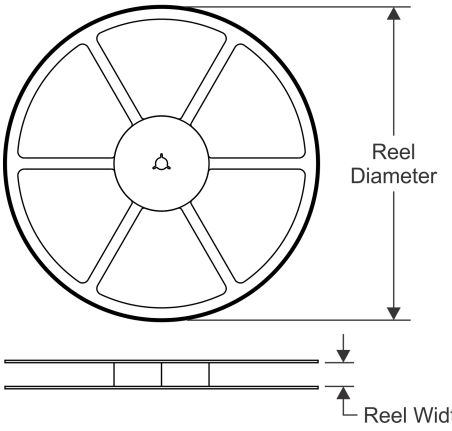

TAPE DIMENSIONS

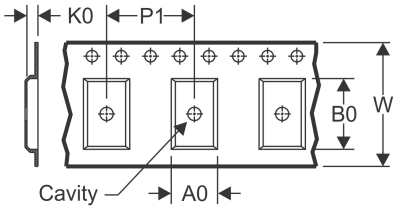

A0	Dimension designed to accommodate the component width
B0	Dimension designed to accommodate the component length
K0	Dimension designed to accommodate the component thickness
W	Overall width of the carrier tape
P1	Pitch between successive cavity centers

QUADRANT ASSIGNMENTS FOR PIN 1 ORIENTATION IN TAPE

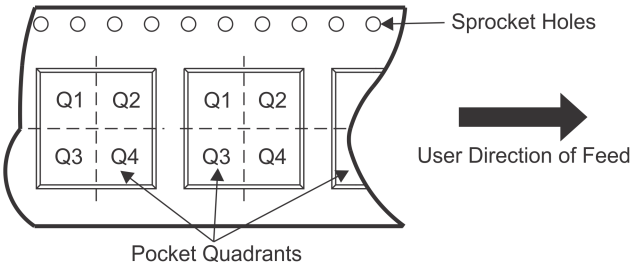

*All dimensions are nominal

Device	Package Type	Package Drawing	Pins	SPQ	Reel Diameter (mm)	Reel Width W1 (mm)	A0 (mm)	B0 (mm)	K0 (mm)	P1 (mm)	W (mm)	Pin1 Quadrant
ONET4291VARGPR	QFN	RGP	20	2500	330.0	12.4	4.25	4.25	1.15	8.0	12.0	Q2
ONET4291VARGPT	QFN	RGP	20	250	180.0	12.4	4.25	4.25	1.15	8.0	12.0	Q2

TAPE AND REEL BOX DIMENSIONS

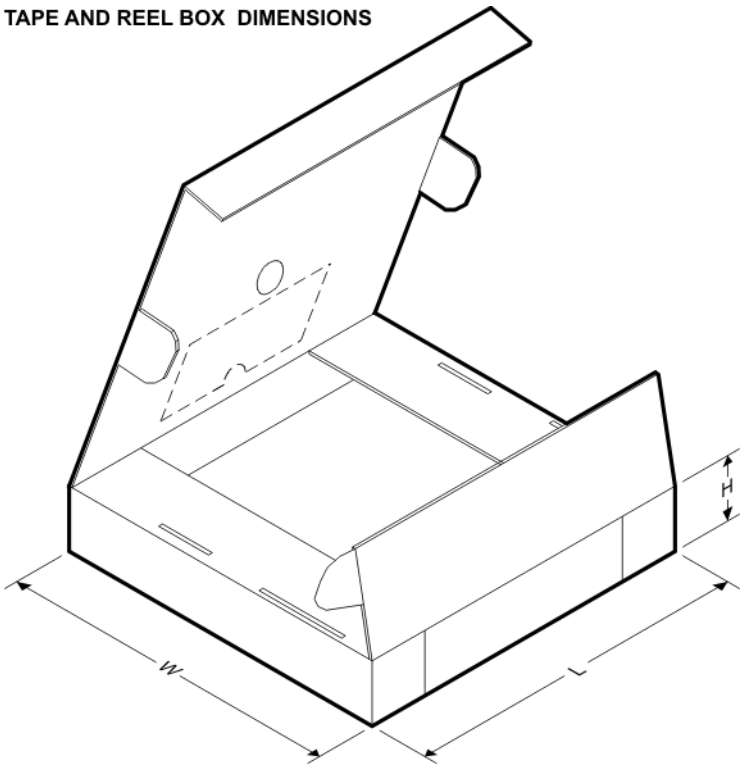

*All dimensions are nominal

Device	Package Type	Package Drawing	Pins	SPQ	Length (mm)	Width (mm)	Height (mm)
ONET4291VARGPR	QFN	RGP	20	2500	367.0	367.0	35.0
ONET4291VARGPT	QFN	RGP	20	250	210.0	185.0	35.0

RGP (S–PVQFN–N20) PLASTIC QUAD FLATPACK NO–LEAD

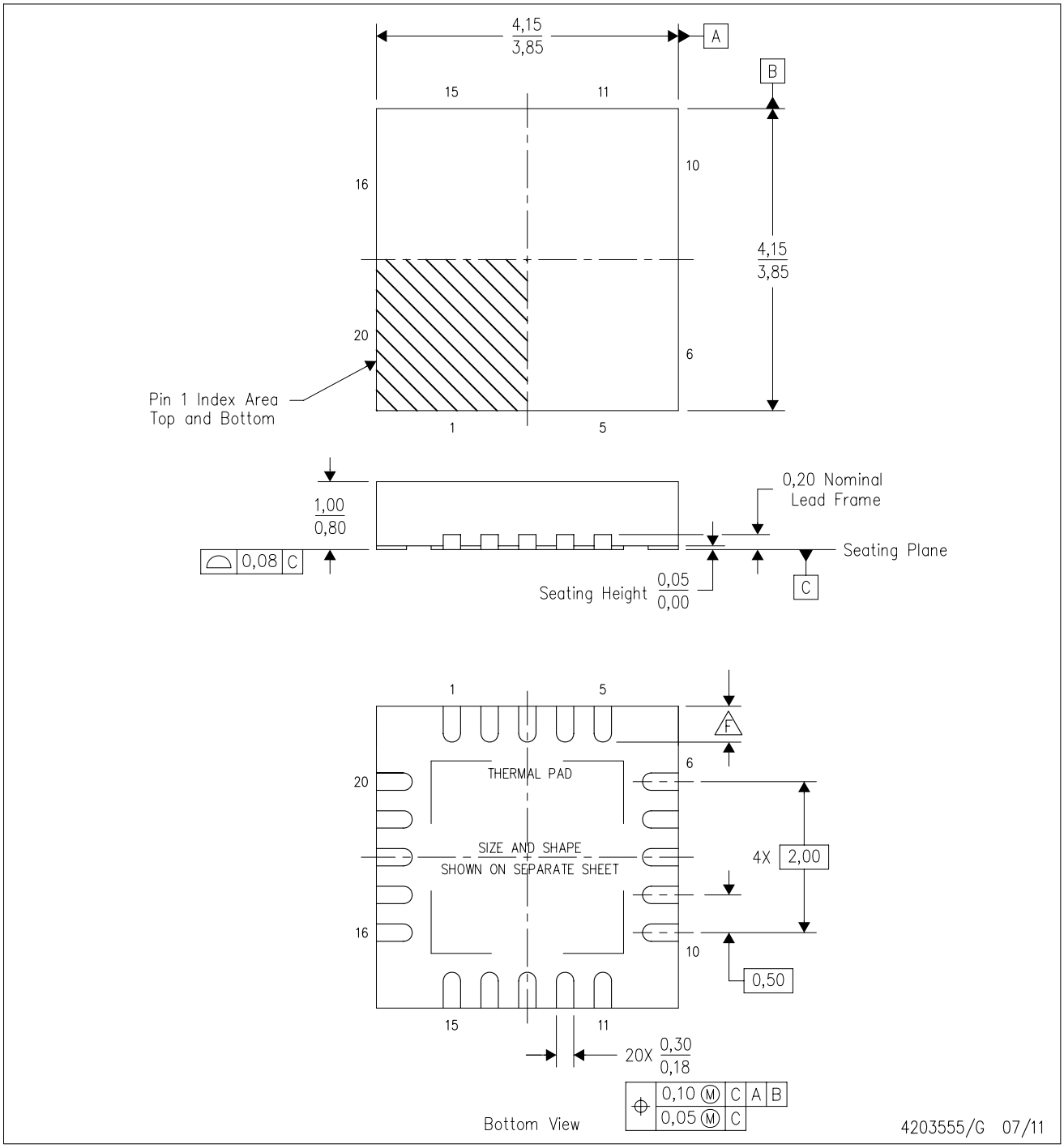

NOTES:
A. All linear dimensions are in millimeters. Dimensioning and tolerancing per ASME Y14.5M–1994.
B. This drawing is subject to change without notice.
C. QFN (Quad Flatpack No–Lead) package configuration.
D. The package thermal pad must be soldered to the board for thermal and mechanical performance.
E. See the additional figure in the Product Data Sheet for details regarding the exposed thermal pad features and dimensions.
F. Check thermal pad mechanical drawing in the product datasheet for nominal lead length dimensions.

RGP (S-PVQFN-N20) PLASTIC QUAD FLATPACK NO-LEAD

THERMAL INFORMATION

This package incorporates an exposed thermal pad that is designed to be attached directly to an external heatsink. The thermal pad must be soldered directly to the printed circuit board (PCB). After soldering, the PCB can be used as a heatsink. In addition, through the use of thermal vias, the thermal pad can be attached directly to the appropriate copper plane shown in the electrical schematic for the device, or alternatively, can be attached to a special heatsink structure designed into the PCB. This design optimizes the heat transfer from the integrated circuit (IC).

For information on the Quad Flatpack No-Lead (QFN) package and its advantages, refer to Application Report, QFN/SON PCB Attachment, Texas Instruments Literature No. SLUA271. This document is available at www.ti.com.

The exposed thermal pad dimensions for this package are shown in the following illustration.

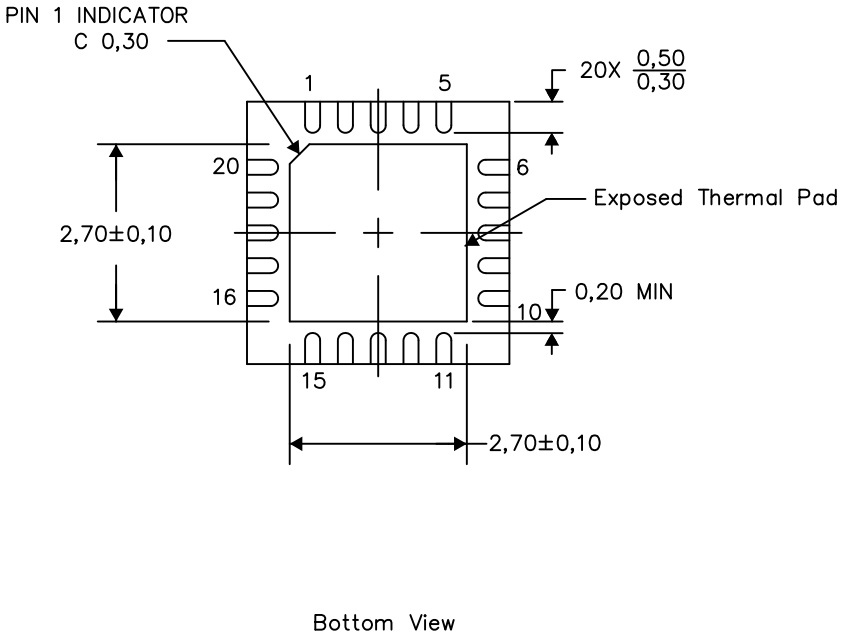

Exposed Thermal Pad Dimensions

4206346-3/Y 12/12

NOTES: A. All linear dimensions are in millimeters

RGP (S-PVQFN-N20) PLASTIC QUAD FLATPACK NO-LEAD

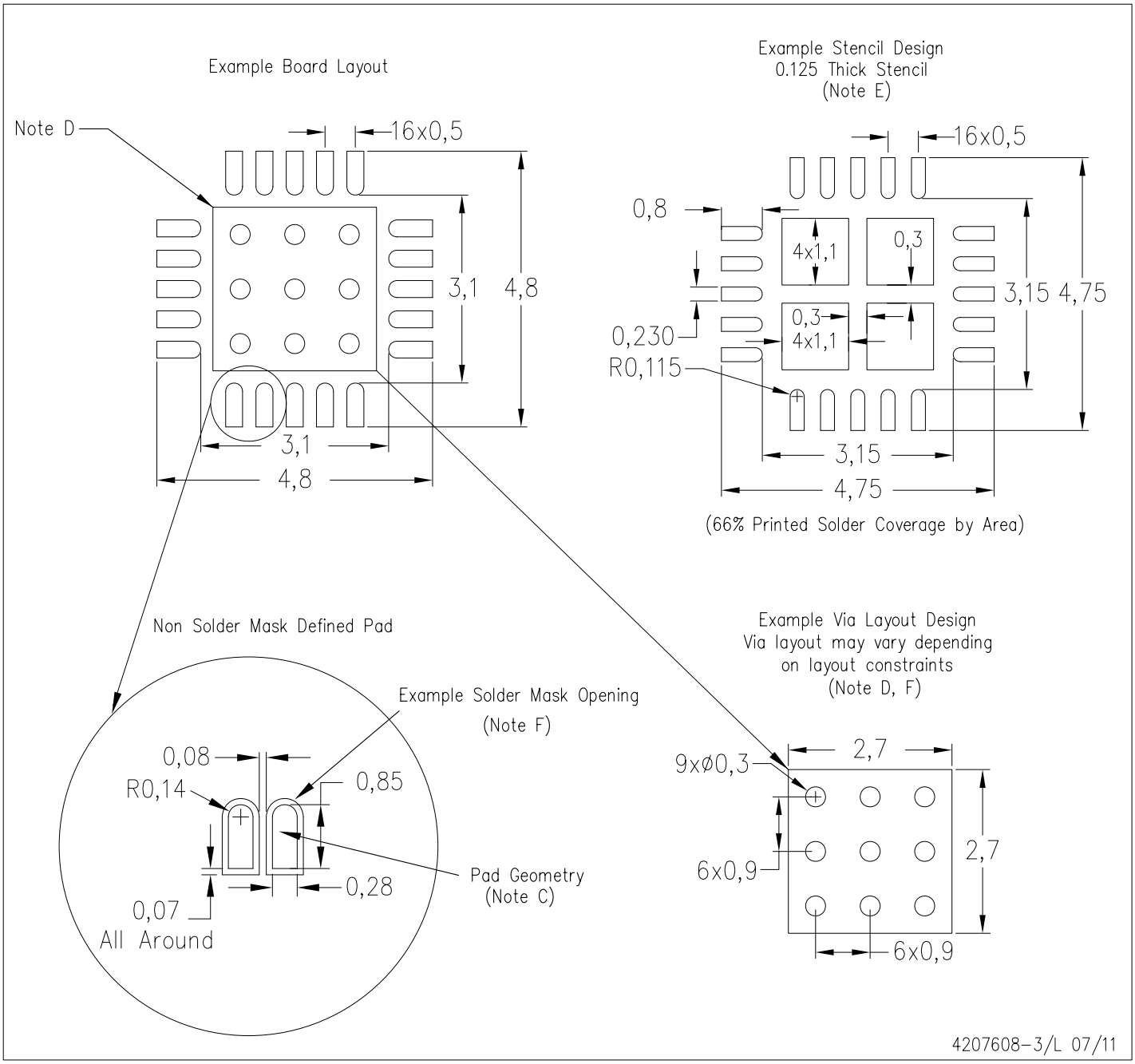

NOTES:
A. All linear dimensions are in millimeters.
B. This drawing is subject to change without notice.
C. Publication IPC-7351 is recommended for alternate designs.
D. This package is designed to be soldered to a thermal pad on the board. Refer to Application Note, Quad Flat-Pack Packages, Texas Instruments Literature No. SLUA271, and also the Product Data Sheets for specific thermal information, via requirements, and recommended board layout. These documents are available at www.ti.com <http://www.ti.com>.
E. Laser cutting apertures with trapezoidal walls and also rounding corners will offer better paste release. Customers should contact their board assembly site for stencil design recommendations. Refer to IPC 7525 for stencil design considerations.
F. Customers should contact their board fabrication site for recommended solder mask tolerances and via tenting recommendations for vias placed in the thermal pad.

IMPORTANT NOTICE

Texas Instruments Incorporated and its subsidiaries (TI) reserve the right to make corrections, enhancements, improvements and other changes to its semiconductor products and services per JESD46, latest issue, and to discontinue any product or service per JESD48, latest issue. Buyers should obtain the latest relevant information before placing orders and should verify that such information is current and complete. All semiconductor products (also referred to herein as “components”) are sold subject to TI’s terms and conditions of sale supplied at the time of order acknowledgment.

TI warrants performance of its components to the specifications applicable at the time of sale, in accordance with the warranty in TI’s terms and conditions of sale of semiconductor products. Testing and other quality control techniques are used to the extent TI deems necessary to support this warranty. Except where mandated by applicable law, testing of all parameters of each component is not necessarily performed.

TI assumes no liability for applications assistance or the design of Buyers’ products. Buyers are responsible for their products and applications using TI components. To minimize the risks associated with Buyers’ products and applications, Buyers should provide adequate design and operating safeguards.

TI does not warrant or represent that any license, either express or implied, is granted under any patent right, copyright, mask work right, or other intellectual property right relating to any combination, machine, or process in which TI components or services are used. Information published by TI regarding third-party products or services does not constitute a license to use such products or services or a warranty or endorsement thereof. Use of such information may require a license from a third party under the patents or other intellectual property of the third party, or a license from TI under the patents or other intellectual property of TI.

Reproduction of significant portions of TI information in TI data books or data sheets is permissible only if reproduction is without alteration and is accompanied by all associated warranties, conditions, limitations, and notices. TI is not responsible or liable for such altered documentation. Information of third parties may be subject to additional restrictions.

Resale of TI components or services with statements different from or beyond the parameters stated by TI for that component or service voids all express and any implied warranties for the associated TI component or service and is an unfair and deceptive business practice. TI is not responsible or liable for any such statements.

Buyer acknowledges and agrees that it is solely responsible for compliance with all legal, regulatory and safety-related requirements concerning its products, and any use of TI components in its applications, notwithstanding any applications-related information or support that may be provided by TI. Buyer represents and agrees that it has all the necessary expertise to create and implement safeguards which anticipate dangerous consequences of failures, monitor failures and their consequences, lessen the likelihood of failures that might cause harm and take appropriate remedial actions. Buyer will fully indemnify TI and its representatives against any damages arising out of the use of any TI components in safety-critical applications.

In some cases, TI components may be promoted specifically to facilitate safety-related applications. With such components, TI’s goal is to help enable customers to design and create their own end-product solutions that meet applicable functional safety standards and requirements. Nonetheless, such components are subject to these terms.

No TI components are authorized for use in FDA Class III (or similar life-critical medical equipment) unless authorized officers of the parties have executed a special agreement specifically governing such use.

Only those TI components which TI has specifically designated as military grade or “enhanced plastic” are designed and intended for use in military/aerospace applications or environments. Buyer acknowledges and agrees that any military or aerospace use of TI components which have ***not*** been so designated is solely at the Buyer's risk, and that Buyer is solely responsible for compliance with all legal and regulatory requirements in connection with such use.

TI has specifically designated certain components as meeting ISO/TS16949 requirements, mainly for automotive use. In any case of use of non-designated products, TI will not be responsible for any failure to meet ISO/TS16949.

Products		**Applications**	
Audio	www.ti.com/audio	Automotive and Transportation	www.ti.com/automotive
Amplifiers	amplifier.ti.com	Communications and Telecom	www.ti.com/communications
Data Converters	dataconverter.ti.com	Computers and Peripherals	www.ti.com/computers
DLP® Products	www.dlp.com	Consumer Electronics	www.ti.com/consumer-apps
DSP	dsp.ti.com	Energy and Lighting	www.ti.com/energy
Clocks and Timers	www.ti.com/clocks	Industrial	www.ti.com/industrial
Interface	interface.ti.com	Medical	www.ti.com/medical
Logic	logic.ti.com	Security	www.ti.com/security
Power Mgmt	power.ti.com	Space, Avionics and Defense	www.ti.com/space-avionics-defense
Microcontrollers	microcontroller.ti.com	Video and Imaging	www.ti.com/video
RFID	www.ti-rfid.com		
OMAP Applications Processors	www.ti.com/omap	**TI E2E Community**	e2e.ti.com
Wireless Connectivity	www.ti.com/wirelessconnectivity		

Mailing Address: Texas Instruments, Post Office Box 655303, Dallas, Texas 75265
Copyright © 2013, Texas Instruments Incorporated

ООО «ЛайфЭлектроникс» “LifeElectronics” LLC

ИНН 7805602321 КПП 780501001 Р/С 40702810122510004610 ФАКБ "АБСОЛЮТ БАНК" (ЗАО) в г.Санкт-Петербурге К/С 30101810900000000703 БИК 044030703

Компания «Life Electronics» занимается поставками электронных компонентов импортного и отечественного производства от производителей и со складов крупных дистрибьюторов Европы, Америки и Азии.

С конца 2013 года компания активно расширяет линейку поставок компонентов по направлению коаксиальный кабель, кварцевые генераторы и конденсаторы (керамические, пленочные, электролитические), за счёт заключения дистрибьюторских договоров

Мы предлагаем:

- *Конкурентоспособные цены и скидки постоянным клиентам.*
- *Специальные условия для постоянных клиентов.*
- *Подбор аналогов.*
- *Поставку компонентов в любых объемах, удовлетворяющих вашим потребностям.*

- *Приемлемые сроки поставки, возможна ускоренная поставка.*
- *Доставку товара в любую точку России и стран СНГ.*
- *Комплексную поставку.*
- *Работу по проектам и поставку образцов.*
- *Формирование склада под заказчика.*

- *Сертификаты соответствия на поставляемую продукцию (по желанию клиента).*
- *Тестирование поставляемой продукции.*
- *Поставку компонентов, требующих военную и космическую приемку.*
- *Входной контроль качества.*
- *Наличие сертификата ISO.*

В составе нашей компании организован Конструкторский отдел, призванный помогать разработчикам, и инженерам.

Конструкторский отдел помогает осуществить:

- *Регистрацию проекта у производителя компонентов.*
- *Техническую поддержку проекта.*
- *Защиту от снятия компонента с производства.*
- *Оценку стоимости проекта по компонентам.*
- *Изготовление тестовой платы монтаж и пусконаладочные работы.*

Тел: +7 (812) 336 43 04 (многоканальный)
Email: org@lifeelectronics.ru

www.lifeelectronics.ru