| PART NUMBER | REV | FIRST USED |
|---|---|---|
| 1385638 – 1 | E | 122500 – 1 |
| 1385638 – 2 | E | 565435 – 5 |
| 1385638 – 3 | E | 354500 – 1 |

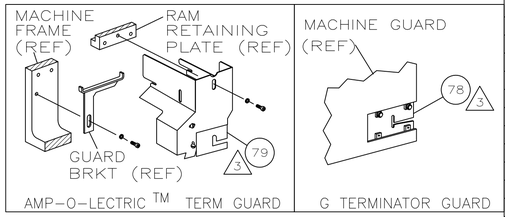


TERMINAL NAME: VERTICAL BULKHEAD CABLE RECPTACLE POWER CONTACT

1600960

AMP TERMINAL AMP CRIMP SPECS

| PAD LTR | CRIMP HEIGHT | WIRE SIZE |
|---|---|---|
| A | .122 ±.002 [3.1 ±0.05mm] | 8 |
| B | .103 ±.002 [2.62 ±0.05mm] | 10 or (2)14 |
| C | NOT | USED |
| D | NOT | USED |

| CRIMP | SIZE | TYPE | RANGE |
|---|---|---|---|
| WIRE | .176 [4.47mm] | F | 8–10 |
| INSUL | .220 [5.59mm] | 0 | .176–.272 |

| WIRE STRIP LENGTH | TERM APPL SPEC | FEED | APPL INSTRUCTION | SET UP GAGE | LAYOUT |
|---|---|---|---|---|---|
| .265–.295 | NONE | .900 | 408–8040 | 458637–1 | L2865 |

USED ON –

| | | | |
|---|---|---|---|
| –1 | LEADMAKER | AIRFEED |
| –2 | BENCH MODEL K | AIRFEED |
| –3 | BENCH MODEL G | AIRFEED |

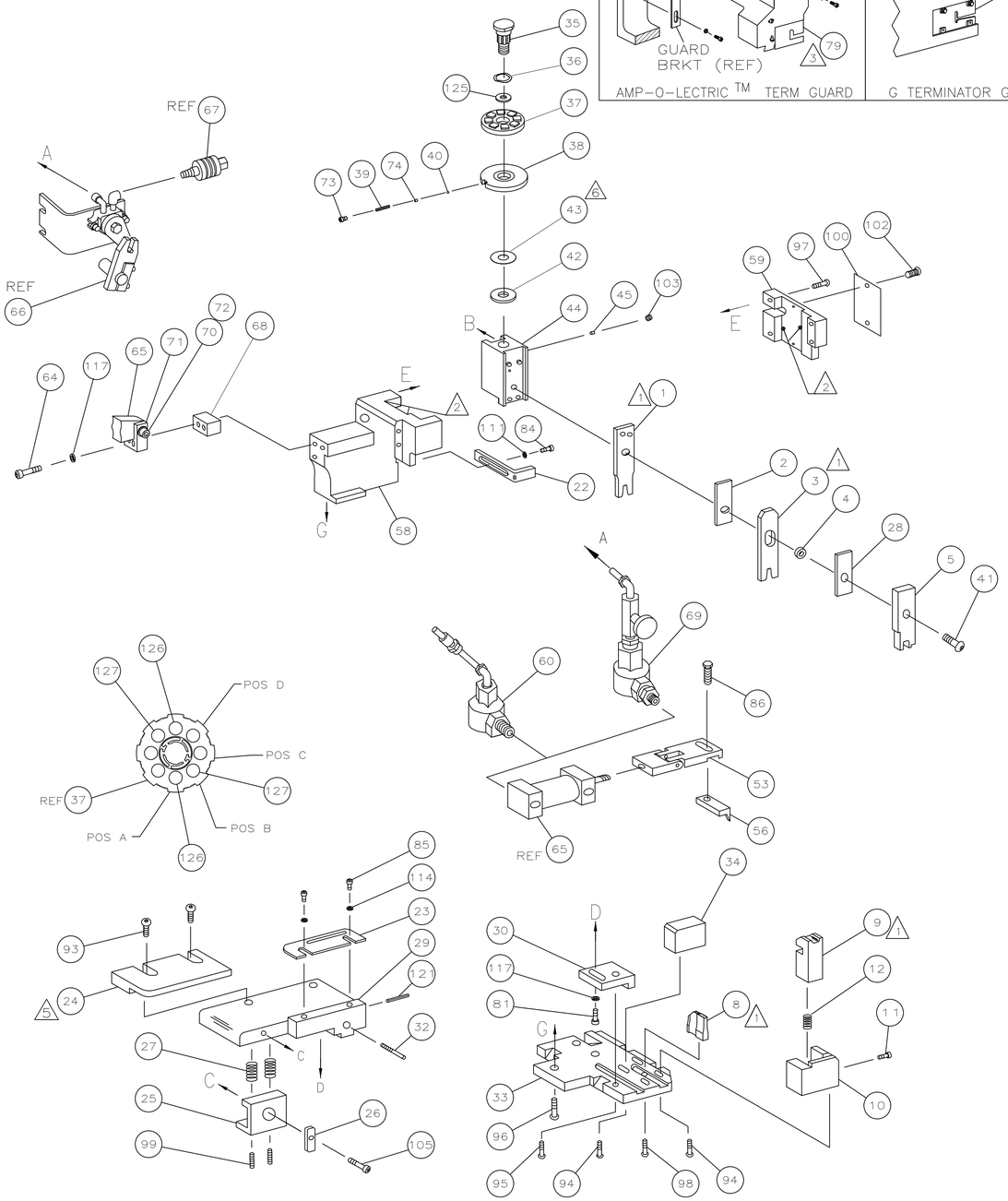


| –3 | –2 | –1 | U/M | PART NO | DESCRIPTION | ITEM NO |
|---|---|---|---|---|---|---|
| | | | | | | 129 |
| | | | | | | 128 |
| 2 | 2 | 2 | – | 4–354778–7 | PIN, WIRE DISC (.2730)B | 127 |
| 2 | 2 | 2 | – | 354778–9 | PIN, WIRE DISC (.2540)A | 126 |
| 1 | 1 | 1 | – | 986950–1 | WASHER, FLAT PRECISION | 125 |
| 1 | 1 | 1 | – | 217238–1 | GENERAL INSTRUCTION PACKAGE | 124 |
| 1 | 1 | 1 | – | 4088040 | SF APPL INST 408–8040 | 123 |
| | | | | | | 122 |
| 1 | 1 | 1 | – | 4–21028–0 | PIN,SLT SPR(Ø.093x.75)ST GDE PL | 121 |
| | | | | | | 120 |
| | | | | | | 119 |
| | | | | | | 118 |
| 3 | 3 | 3 | – | 21024–5 | WASHER, LOCK(#10)ADJ BLOCK | 117 |
| | | | | | | 116 |
| | | | | | | 115 |
| 2 | 2 | 2 | – | 21024–2 | WASHER,LOCK(#4)FRONT STP GUIDE | 114 |
| | | | | | | 113 |
| | | | | | | 112 |
| 1 | 1 | 1 | – | 21024–4 | WASHER,LOCK(#8)STRIPPER | 111 |
| | | | | | | 110 |
| | | | | | | 109 |
| | | | | | | 108 |
| | | | | | | 107 |
| | | | | | | 106 |
| 1 | 1 | 1 | – | 22353–8 | SCR,SHLD(Ø.187x.25)DRAG LEVER | 105 |
| | | | | | | 104 |
| 1 | 1 | 1 | – | 21009–2 | SCR,SKT SET(1/4–20x.25 LW)RAM | 103 |
| 2 | 2 | 2 | – | 21017–2 | SCR,DRIVE(#2x.19)ID PLATE | 102 |
| | | | | | | 101 |
| 1 | 1 | 1 | – | 461264–1 | PLATE, IDENTIFICATION | 100 |
| 2 | 2 | 2 | – | 5–21006–6 | SCR,SET(10–32x.75)DRAG | 99 |
| 1 | 1 | 1 | – | 22733–8 | SCR,BHC(8–32x.38 LW)ANVIL | 98 |
| 4 | 4 | 4 | – | 2–21002–9 | SCR,BHC(10–32x.75)CAP | 97 |
| 3 | 3 | 3 | – | 2–22733–8 | SCR,BHC(1/4–20x.62)HSG | 96 |
| 1 | 1 | 1 | – | 2–21002–7 | SCR,BHC(10–32x.50)SG ADJ BLK | 95 |
| 4 | 4 | 4 | – | 2–21002–2 | SCR,BHC(8–32x.50)TERM H DWN | 94 |
| 2 | 2 | 2 | – | 2–21002–4 | SCR,BHC(8–32x.75)R STP GDE | 93 |
| | | | | | | 92 |
| | | | | | | 91 |
| | | | | | | 90 |
| | | | | | | 89 |
| | | | | | | 88 |
| | | | | | | 87 |
| 1 | 1 | 1 | – | 2–21002–0 | SCR,BHC(8–32x.25)FEED FINGER | 86 |
| 2 | 2 | 2 | – | 1–21000–3 | SCR,SHC(4–40x.25)FR ST GUIDE | 85 |
| 1 | 1 | 1 | – | 2–21000–7 | SCR,SHC(8–32x.50)STRIPPER | 84 |
| | | | | | | 83 |
| | | | | | | 82 |
| 1 | 1 | 1 | – | 3–21000–4 | SCR,SHC(10–32x.38)SG ADJ BL | 81 |
| | | | | | | 80 |
| – | 1 | – | – | 462992–7 | GUARD ASSY | 79 |
| REF | – | – | – | 679532–1 | INSERT, GUARD | 78 |
| | | | | | | 77 |
| | | | | | | 76 |
| | | | | | | 75 |
| 1 | 1 | 1 | – | 690603–1 | SPRING, ASSIST | 74 |
| 1 | 1 | 1 | – | 23030–1 | SCR,SHC(6–32x.25 SL)INS DISC | 73 |
| 1 | 1 | 1 | – | 3–21001–4 | SCR,SHC(3/8x.88)FEED MT | 72 |
| 1 | 1 | 1 | – | 459610–3 | MOUNT, FEED BRACKET | 71 |

QTY REQD PER ASSY — PARTS LIST

| –3 | –2 | –1 | U/M | PART NO | DESCRIPTION | ITEM NO |
|---|---|---|---|---|---|---|
| 1 | 1 | 1 | – | 21024–8 | WASHER,LOCK(3/8)FEED BRKT | 70 |
| – | 1 | – | – | 692655–5 | AIR FEED VALVE ASSY | 69 |
| 1 | 1 | 1 | – | 461690–1 | SPACER, AIR FEED | 68 |
| – | REF | – | – | 24042–2 | VALVE, SHUT OFF | 67 |
| – | REF | – | – | 692655–6 | AIR FEED VALVE ASSY | 66 |
| 1 | 1 | 1 | – | 461065–2 | AIR FEED ASSY (2 INCH) | 65 |
| 2 | 2 | 2 | – | 4–21000–3 | SCR,SHC(10–32x2.00)AIR ASSY | 64 |
| | | | | | | 63 |
| | | | | | | 62 |
| | | | | | | 61 |
| 1 | – | 1 | – | 692655–7 | AIR FEED VALVE ASSY | 60 |
| 1 | 1 | 1 | – | 454220–1 | CAP, RAM | 59 |
| 1 | 1 | 1 | – | 454485–1 | HOUSING | 58 |
| | | | | | | 57 |
| 1 | 1 | 1 | – | 2–694433–1 | PAWL, FEED | 56 |
| | | | | | | 55 |
| | | | | | | 54 |
| 1 | 1 | 1 | – | 461062–1 | FEED FINGER ASSY | 53 |
| | | | | | | 52 |
| | | | | | | 51 |
| | | | | | | 50 |
| | | | | | | 49 |
| | | | | | | 48 |
| | | | | | | 47 |
| | | | | | | 46 |
| 1 | 1 | 1 | – | 690191–1 | PLUG, NYLON | 45 |
| 1 | 1 | 1 | – | 1–819307–0 | RAM | 44 |
| 1 | 1 | 1 | – | 690125–1 | WASHER, LAMINATED | 43 |
| 1 | 1 | 1 | – | 690124–6 | WASHER, RAM | 42 |
| 1 | 1 | 1 | – | 7–21002–9 | BOLT, CRIMPER(5/16x1.00) | 41 |
| 1 | 1 | 1 | – | 23241–6 | BALL, STEEL | 40 |
| 1 | 1 | 1 | – | 690170–1 | SPRING, COMPRESSION | 39 |
| 1 | 1 | 1 | – | 1–690142–1 | DISC, INSULATION | 38 |
| 1 | 1 | 1 | – | 354777–1 | WIRE DISC, PLASTIC | 37 |
| 1 | 1 | 1 | – | 22480–5 | WASHER, SPRING | 36 |
| 1 | 1 | 1 | – | 690212–1 | POST, RAM | 35 |
| 1 | 1 | 1 | – | 690786–1 | SUPPORT, TERMINAL | 34 |
| 1 | 1 | 1 | – | 455675–1 | PLATE, BASE | 33 |
| 1 | 1 | 1 | – | 690432–3 | SCREW, ADJUSTMENT | 32 |
| | | | | | | 31 |
| 1 | 1 | 1 | – | 455689–1 | BLOCK, STRIP GUIDE ADJ | 30 |
| 1 | 1 | 1 | – | 458144–1 | PLATE, STRIP GUIDE | 29 |
| 1 | 1 | 1 | – | 1–455888–6 | SPACER, FRONT SHEAR DEP | 28 |
| 2 | 2 | 2 | – | 1–22284–0 | SPRING, DRAG | 27 |
| 1 | 1 | 1 | – | 356835–1 | LEVER, DRAG RELEASE | 26 |
| 1 | 1 | 1 | – | 240792–1 | DRAG, TERMINAL | 25 |
| 1 | 1 | 1 | – | 4–90765–2 | GUIDE, STRIP (REAR) | 24 |
| 1 | 1 | 1 | – | 1–690438–0 | GUIDE, STRIP (FRONT) | 23 |
| 1 | 1 | 1 | – | 458230–4 | STRIPPER | 22 |
| | | | | | | 21 |
| | | | | | | 20 |
| | | | | | | 19 |
| | | | | | | 18 |
| | | | | | | 17 |
| | | | | | | 16 |
| | | | | | | 15 |
| | | | | | | 14 |
| | | | | | | 13 |
| 1 | 1 | 1 | – | 3–22280–3 | SPRING, SHEAR | 12 |
| 1 | 1 | 1 | – | 690461–2 | STOP, SHEAR | 11 |
| 1 | 1 | 1 | – | 2–690459–3 | HOLDER, SHEAR (FRONT) | 10 |
| 1 | 1 | 1 | – | 2–454276–4 | SHEAR, FLOAT (FRONT) | 9 |
| 1 | 1 | 1 | – | 7–662520–8 | ANVIL | 8 |
| | | | | | | 7 |
| | | | | | | 6 |
| 1 | 1 | 1 | – | 3–455889–9 | DEPRESSOR, SHEAR (FRONT) | 5 |
| 1 | 1 | 1 | – | 238011–1 | SPACER, BLOCK CRIMPER | 4 |
| 1 | 1 | 1 | – | 3–456135–4 | CRIMPER, INSULATION | 3 |
| 1 | 1 | 1 | – | 1–455888–0 | SPACER, CRIMPER | 2 |
| 1 | 1 | 1 | – | 4–1490019–3 | CRIMPER, WIRE | 1 |

PARTS LIST

1. RECOMMENDED SPARE PARTS.
2. GREASE LIGHTLY.
3. GUARD MUST BE IN PLACE WHEN OPERATING APPLICATOR IN A BENCH MACHINE.
4. SEE DRAWING FOR COMPONENTS
5. REAR STRIP GUIDE TO GUIDE ON INSULATION BARREL.
6. TRIM TO FIT ITEM 43 TO OUTSIDE DIAMETER OF ITEM 42 DURING ASSEMBLY.
7. AMP 3K/5K TERMINATORS REQUIRE AN OVERSIZED GUARD KIT, P/N 1976900–1.

| P | LTR | REVISION RECORD | DATE | DWN | APVD |
|---|---|---|---|---|---|
| | E1 | ECR–12–005668 | 3–2012 | MY | GB |

DIMENSIONS: INCHES

TOLERANCES UNLESS OTHERWISE SPECIFIED:
0 PLC ± –
1 PLC ± –
2 PLC ± .25
3 PLC ± –
4 PLC ± –
ANGLES ± –
SURFACE TEXTURE –√

| | | |
|---|---|---|
| DWN R. KNEPPER 31JUL03 | MATERIAL – – | HEAT TREAT – – |
| CHK G.BAILEY 20OCT03 | Tyco Electronics | Tyco Electronics Corporation Harrisburg, PA 17105–3608 |
| APVD T.ELBIN 31JUL03 | | |
| NAME SIDE FEED HDM APPLICATOR | | |
| SCALE – | SIZE A1 | DRAWING NO 1385638 |
| SHEET 1 OF 1 | REV E1 | |

CUSTOMER ACCESSIBLE PRODUCTION DRAWING

DIMENSIONING AND TOLERANCING PER ASME Y14.5M (ISO STANDARDS)
THIS DRAWING IS A CONTROLLED DOCUMENT.

DWG NO 1385638

THIS INFORMATION IS CONFIDENTIAL AND PROPRIETARY TO TYCO ELECTRONICS CORPORATION AND ITS WORLDWIDE SUBSIDIARIES AND AFFILIATES. IT MAY NOT BE DISCLOSED TO ANYONE EXCEPT TYCO ELECTRONICS PERSONNEL WITHOUT WRITTEN AUTHORIZATION FROM TYCO ELECTRONICS CORPORATION, HARRISBURG, PENNSYLVANIA USA.

LOC A
DIST 66
3308–8 (1/08)

ООО «ЛайфЭлектроникс» “LifeElectronics” LLC

ИНН 7805602321 КПП 780501001 Р/С 40702810122510004610 ФАКБ "АБСОЛЮТ БАНК" (ЗАО) в г.Санкт-Петербурге К/С 30101810900000000703 БИК 044030703

*Компания «Life Electronics» занимается поставками электронных компонентов импортного и отечественного производства от производителей и со складов крупных дистрибьюторов Европы, Америки и Азии.*

*С конца 2013 года компания активно расширяет линейку поставок компонентов по направлению коаксиальный кабель, кварцевые генераторы и конденсаторы (керамические, пленочные, электролитические), за счёт заключения дистрибьюторских договоров*

*Мы предлагаем:*

- *Конкурентоспособные цены и скидки постоянным клиентам.*
- *Специальные условия для постоянных клиентов.*
- *Подбор аналогов.*
- *Поставку компонентов в любых объемах, удовлетворяющих вашим потребностям.*

- *Приемлемые сроки поставки, возможна ускоренная поставка.*
- *Доставку товара в любую точку России и стран СНГ.*
- *Комплексную поставку.*
- *Работу по проектам и поставку образцов.*
- *Формирование склада под заказчика.*

- *Сертификаты соответствия на поставляемую продукцию (по желанию клиента).*
- *Тестирование поставляемой продукции.*
- *Поставку компонентов, требующих военную и космическую приемку.*
- *Входной контроль качества.*
- *Наличие сертификата ISO.*

*В составе нашей компании организован Конструкторский отдел, призванный помогать разработчикам, и инженерам.*

*Конструкторский отдел помогает осуществить:*

- *Регистрацию проекта у производителя компонентов.*
- *Техническую поддержку проекта.*
- *Защиту от снятия компонента с производства.*
- *Оценку стоимости проекта по компонентам.*
- *Изготовление тестовой платы монтаж и пусконаладочные работы.*

*Тел: +7 (812) 336 43 04 (многоканальный)*
*Email: org@lifeelectronics.ru*

***www.lifeelectronics.ru***