REVISIONS				
SYM	ZONE	ECN, ERN NO.	DATE	APPRD.
G		ADD DWV & OPERATING TEMP.	JAN.19, 12	L.CHAN
H		ADD SHIELD TAIL DIM.	AUG.19, 13	L.CHAN
J		ADD TOLERANCE FOR CUT–OUT	AUG.30, 13	L.CHAN

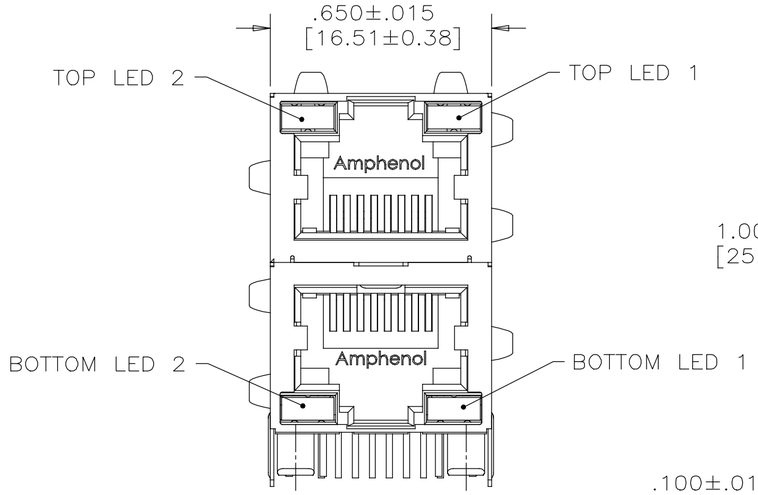

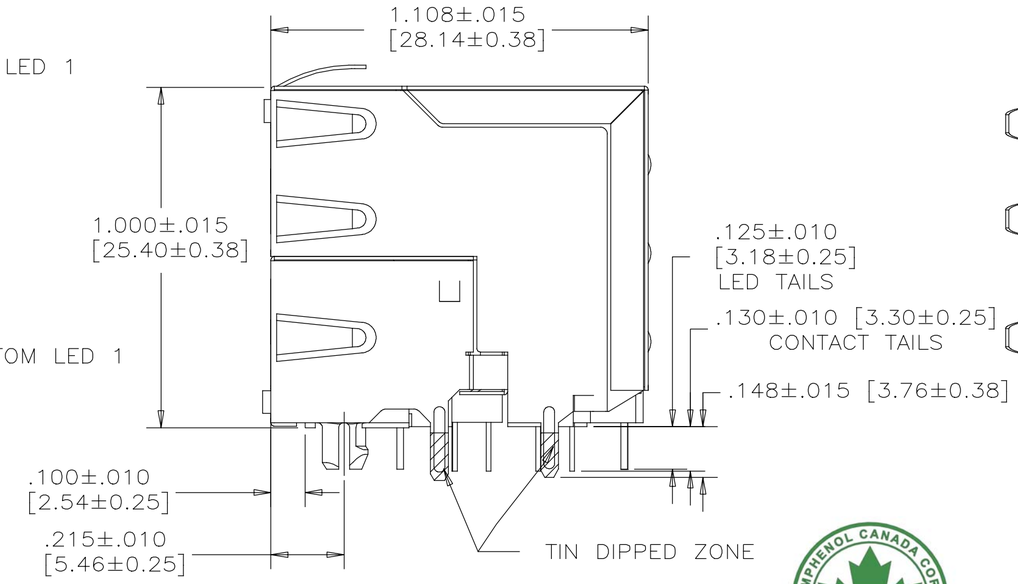

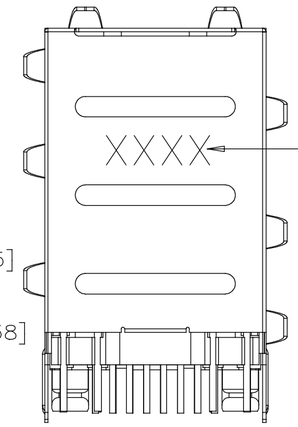

DATE CODE
ONLY APPLY TO RJSAE–5381–A2

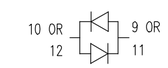

BI–COLOUR LED DETAIL
(GREEN/YELLOW, RED/YELLOW AND GREEN/ORANGE ARE ALSO AVAILABLE)

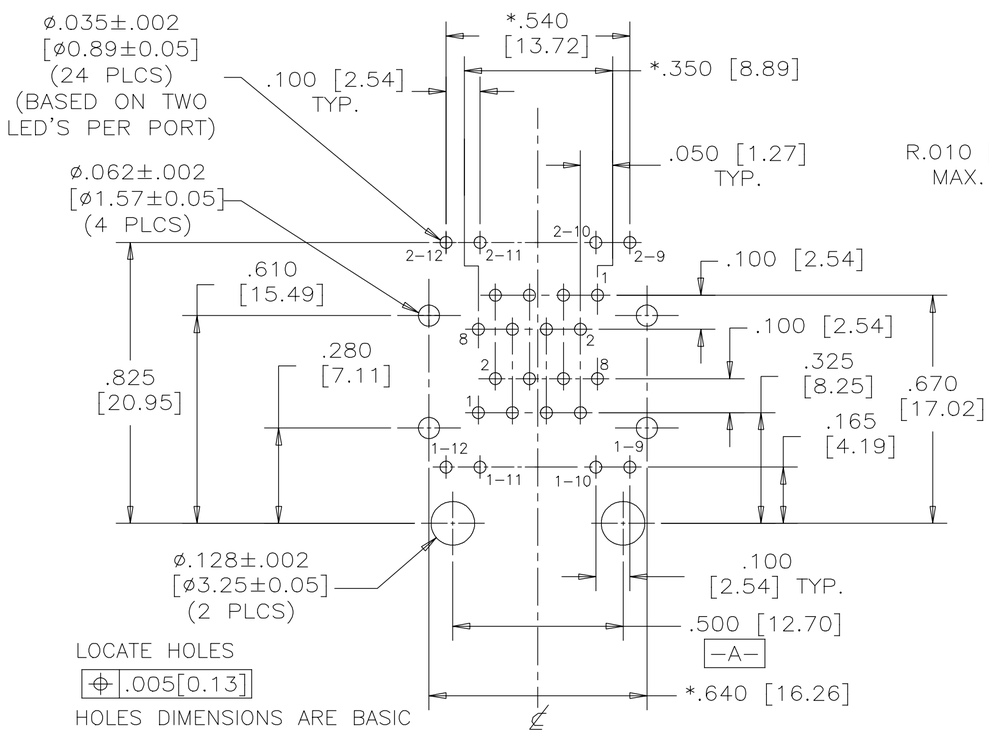

RECOMMENDED P.C.B. LAYOUT
(COMPONENT SIDE OF BOARD)

DIMENSIONS MARKED WITH * ARE SYMMETRICAL ABOUT CENTER LINE AS DEFINED BY DATUM –A–

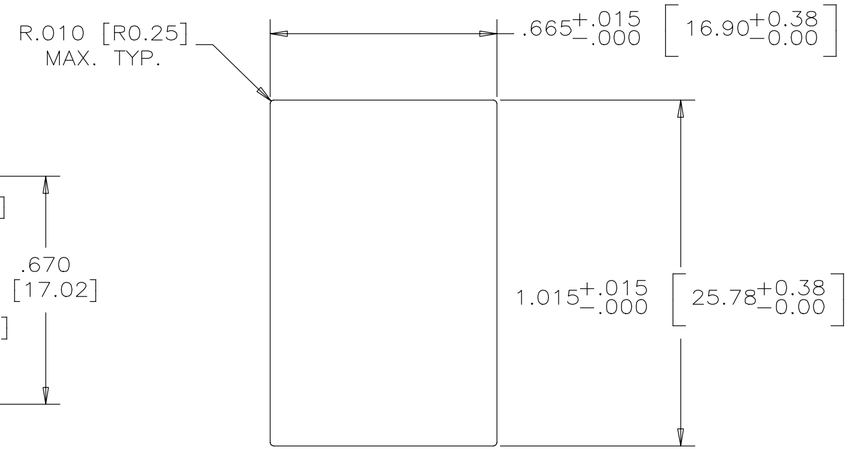

RECOMMENDED PANEL CUTOUT

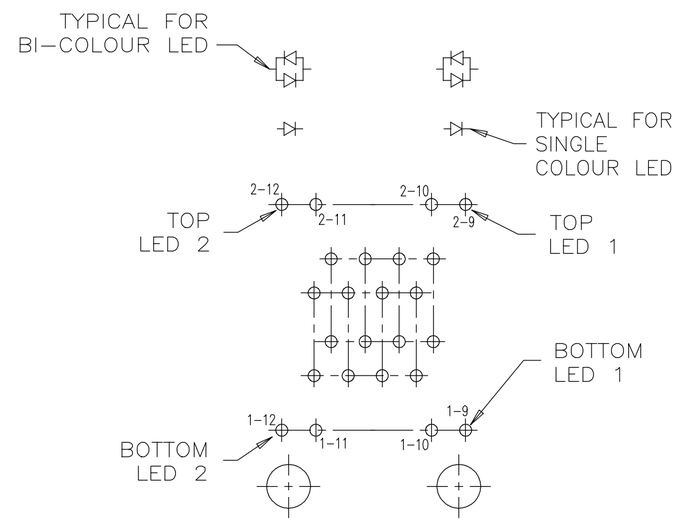

LED SCHEMATIC

DIELECTRIC WITHSTANDING VOLTAGE:
1500 VAC RMS SIGNAL PIN TO SHIELD.
OPERATING TEMPERATURE: –55°C to +85°C

AMPHENOL PART NO.: RJSAE–538X–A2X

REFER TO LED OPTIONS DRAWING FOR ORDERING CODES

MATERIALS:

CONTACTS: PHOSPHOR BRONZE, SELECTIVELY PLATED WITH 50 MICRO" GOLD ON MATING AREAS. 50 MICRO" MIN. NICKEL OVERALL. 100 MICRO" MIN. MATTE TIN OR GOLD FLASH ON TAILS.

HOUSING: HIGH TEMPERATURE ENGINEER THERMOPLASTIC. COLOUR – BLACK. FLAMMABILITY RATING UL 94V–0

SHIELD: COPPER ALLOY PLATING: NICKEL WITH TIN DIPPED PCB TAILS.

THIS DOCUMENT CONTAINS PROPRIETARY INFORMATION AND SUCH INFORMATION MAY NOT BE DISCLOSED TO OTHERS FOR ANY PURPOSE OR USED FOR MANUFACTURING PURPOSES WITHOUT WRITTEN PERMISSION FROM AMPHENOL CANADA CORP.

DRAWN PWANG	DATE 05/12/29	Amphenol Canada Corp.
DESIGNED		
CHECKED CHIGOW	05/12/29	TITLE 2x1 STACKABLE MODULAR JACK SHIELDED, 2 PIECE CONSTRUCTION, 8 POS., 8 CONTACTS, WITH LED OPTIONS, .130 INCHES CONTACT TAIL LENGTH– RoHS COMPLIANT
I. E. APPRD.		
Q. A. APPRD.		
DWG. APPRD.		
ENG. REL. NO.		DWG / DRAWING NO. P–RJSAE–538X–A2X / REV. J
REF.		
DIMENSIONS ARE IN INCHES [mm]	CODE ID. NO. 03554	SCALE / WT. ––––– / SURF. ––––– / SHEET 1 OF 1

REVISIONS				
SYM	ZONE	ECN, ERN NO.	DATE	APPRD.
H		PROPOSAL	JUL04/12	L.CHAN
J		UPDATE ROHS STAMP	JAN21/13	L.CHAN

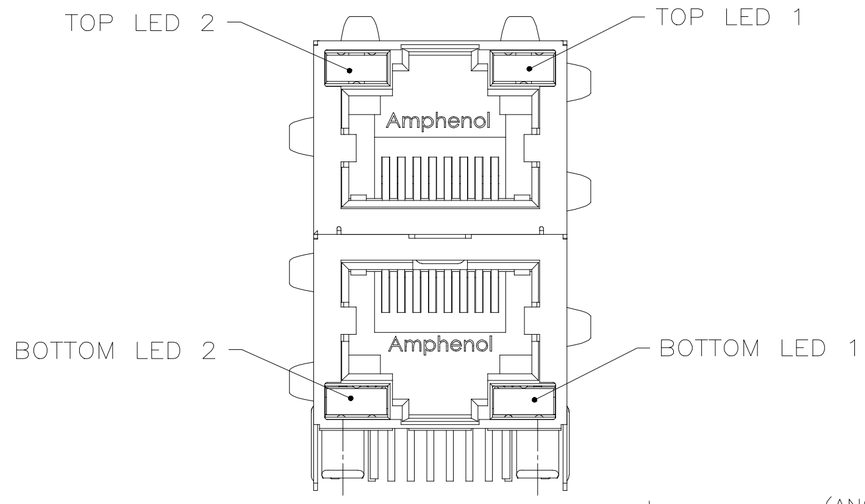

TYPICAL FOR TWO & MULTI-PORT

LED SPECIFICATIONS:
FORWARD VOLTAGE: 2.1 VOLTS TYP.
REVERSE VOLTAGE: 5.0 VOLTS MIN.
LUMINOUS INTENSITY: 0.5 mCd MIN.
(AT If=2mA)
STORAGE TEMPERATURE: −40° TO 85° C
PLATING ON TAILS: TIN OR TIN/COPPER ALLOY OVER SILVER

EXAMPLE:1
PART NUMBER RJSAE−***X−**
SEE NOTE 2
LED COLOR CODE
SEE NOTE 2

EXAMPLE:2
PART NUMBER RJSAE−***U−**−XX
SEE NOTE 2
SPECIAL CODE FOR TOP & BOTTOM LEDS CONFIGURATION
SEE NOTE 2
TOP ASSY LED (SAME AS STD CODE)
BOTTOM ASSY LED (SAME AS STD CODE)

PRIMARY COLOR FOR BI−COLOR LEDS IN STANDARD ANODE/ CATHODE CONFIGURATION IS:
RED−GREEN= RED
RED−YELLOW= RED
GREEN−YELLOW= GREEN
GREEN−ORANGE= GREEN

CODE	LED 2 (LEFT)	LED 1 (RIGHT)	CODE	LED 2 (LEFT)	LED 1 (RIGHT)	CODE	LED 2 (LEFT)	LED 1 (RIGHT)
0	BLOCKED	BLOCKED	9	GREEN	BLOCKED	J	BiC RD/GR	YELLOW
1	YELLOW	GREEN	A	BiC GR/YE	BiC GR/YE	K	YELLOW	BiC GR/OR
2	BLOCKED	GREEN	B	BiC RD/GR	BiC RD/GR	L	BiC GR/YE	RED
3	YELLOW	BLOCKED	C	BiC RD/GR	BiC GR/YE	M	RED	YELLOW
4	GREEN	YELLOW	D	GREEN	BiC GR/YE	N	BiC GR/RD	BiC GR/YE
5	GREEN	GREEN	E	YELLOW	BiC GR/YE	P	GREEN	BiC RD/GR
6	YELLOW	YELLOW	F	BiC GR/YE	YELLOW	R	BiC GR/OR	GREEN
7	RED	GREEN	G	BiC GR/OR	BiC GR/OR	T	RED	RED
8	GREEN	RED	H	BiC GR/YE	GREEN	V	BiC RD/GR	GREEN
						W	ADDITIONAL OPTIONS	
						U	SPECIAL CODE FOR TOP & BOTTOM LEDS CONFIGURATION	

LEGEND
BiC=BI−COLOR LED
LOWC=LOW CURRENT LED
YE=YELLOW
GR=GREEN
RD=RED
OR=ORANGE

EXAMPLE:3
PART NUMBER RJSAE−***W−**X
SEE NOTE 2
DENOTES ADDITIONAL LED OPTIONS TO BE USED
SEE NOTE 2
ADDITIONAL LED COLOR CODE

CODE	LED 2 (LEFT)	LED 1 (RIGHT)	CODE	LED 2 (LEFT)	LED 1 (RIGHT)	CODE	LED 2 (LEFT)	LED 1 (RIGHT)
0	DO NOT USE		5	BLOCKED	YELLOW	A	LOWC YE	LOWC YE
1	RED	BLOCKED	6	RED	BiC RD/GR	B	LOWC YE	LOWC GR
2	BiC GR/OR	YELLOW	7			C	LOWC GR	LOWC YE
3	YELLOW	RED	8	BiC RD/GR	BLOCKED	D	LOWC GR	LOWC GR
4	BLOCKED	RED	9	BiC GR/YE	BLOCKED	M	LOWC RD	LOWC YE
						N	GREEN	BiC GR/OR
						E	GREEN	ORANGE
						F	ORANGE	GREEN
						P	BiC RD/YE	GREEN
						R	BiC RD/YE	BiC RD/YE
						T	BiC GR/YE	BiC RD/GR

NOTES:
1. THE TWO DIGITS PRECEDING THE ADDITIONAL LED CODE MUST BE USED IN THE PART NUMBER, WHEN ORDERING ANY OF THE ADDITIONAL LED OPTIONS.
2. '*' REPRESENT DIFFERENT OPTION OF CONNECTOR, DETAIL OPTION PLEASE SEE RELEVANT CONNECTOR DRAWING.

EXAMPLE:4
PART NUMBER RJSAE−***X−**XX*
SEE NOTE 2
LED COLOR CODE THE SAME AS EXAMPLE 1, 2, 3
SEE NOTE 2
LED COLOR CODE THE SAME AS EXAMPLE 1, 2, 3
SEE NOTE 2

THIS DOCUMENT CONTAINS PROPRIETARY INFORMATION AND SUCH INFORMATION MAY NOT BE DISCLOSED TO OTHERS FOR ANY PURPOSE OR USED FOR MANUFACTURING PURPOSES WITHOUT WRITTEN PERMISSION FROM AMPHENOL CANADA CORP.

DRAWN PAUL WANG	DATE 05/07/22	Amphenol Canada Corp.
DESIGNED		
CHECKED TERRY	05/07/22	TITLE LED OPTIONS FOR RJSAE, MULTI−PORT CONNECTORS − RoHS COMPLIANT
I. E. APPRD.		
Q. A. APPRD.		
DWG. APPRD.		
ENG. REL. NO.		DWG / DRAWING NO. P−RJSAE−LEDS / REV. J
REF.		
DIMENSIONS ARE IN INCHES [mm]	CODE ID. NO. 03554	SCALE / WT. −−−−− / SURF. −−−− / SHEET 1 OF 1

ООО «ЛайфЭлектроникс» “LifeElectronics” LLC

ИНН 7805602321 КПП 780501001 Р/С 40702810122510004610 ФАКБ "АБСОЛЮТ БАНК" (ЗАО) в г.Санкт-Петербурге К/С 30101810900000000703 БИК 044030703

Компания «Life Electronics» занимается поставками электронных компонентов импортного и отечественного производства от производителей и со складов крупных дистрибьюторов Европы, Америки и Азии.

С конца 2013 года компания активно расширяет линейку поставок компонентов по направлению коаксиальный кабель, кварцевые генераторы и конденсаторы (керамические, пленочные, электролитические), за счёт заключения дистрибьюторских договоров

Мы предлагаем:

- *Конкурентоспособные цены и скидки постоянным клиентам.*
- *Специальные условия для постоянных клиентов.*
- *Подбор аналогов.*
- *Поставку компонентов в любых объемах, удовлетворяющих вашим потребностям.*

- *Приемлемые сроки поставки, возможна ускоренная поставка.*
- *Доставку товара в любую точку России и стран СНГ.*
- *Комплексную поставку.*
- *Работу по проектам и поставку образцов.*
- *Формирование склада под заказчика.*

- *Сертификаты соответствия на поставляемую продукцию (по желанию клиента).*
- *Тестирование поставляемой продукции.*
- *Поставку компонентов, требующих военную и космическую приемку.*
- *Входной контроль качества.*
- *Наличие сертификата ISO.*

В составе нашей компании организован Конструкторский отдел, призванный помогать разработчикам, и инженерам.

Конструкторский отдел помогает осуществить:

- *Регистрацию проекта у производителя компонентов.*
- *Техническую поддержку проекта.*
- *Защиту от снятия компонента с производства.*
- *Оценку стоимости проекта по компонентам.*
- *Изготовление тестовой платы монтаж и пусконаладочные работы.*

Тел: +7 (812) 336 43 04 (многоканальный)
Email: org@lifeelectronics.ru

www.lifeelectronics.ru