74VHCT132A

QUAD 2-INPUT SCHMITT NAND GATE

PRELIMINARY DATA

- HIGH SPEED: t_{PD} = 6.5 ns (TYP.) at V_{CC} = 5V
- LOW POWER DISSIPATION: I_{CC} = 2 µA (MAX.) at T_A = 25 °C
- TYPICAL HYSTERESIS: 0.7V at V_{CC} = 4.5V
- POWER DOWN PROTECTION ON INPUTS & OUTPUTS
- SYMMETRICAL OUTPUT IMPEDANCE: $|I_{OH}| = I_{OL}$ = 8 mA (MIN)
- BALANCED PROPAGATION DELAYS: $t_{PLH} \cong t_{PHL}$
- OPERATING VOLTAGE RANGE: V_{CC} (OPR) = 4.5V to 5.5V
- PIN AND FUNCTION COMPATIBLE WITH 74 SERIES 132
- IMPROVED LATCH-UP IMMUNITY
- LOW NOISE: V_{OLP} = 0.8V (Max.)

SOP TSSOP

ORDER CODES		
PACKAGE	TUBE	T & R
SOP	74VHCT132AM	74VHCT132AMTR
TSSOP		74VHCT132ATTR

DESCRIPTION

The 74VHCT132A is an advanced high-speed CMOS QUAD 2-INPUT SCHMITT NAND GATE fabricated with sub-micron silicon gate and double-layer metal wiring C^2MOS technology.

Power down protection is provided on all inputs and outputs and 0 to 7V can be accepted on inputs with no regard to the supply voltage. This device can be used to interface 5V to 3V.

Pin configuration and function are the same as those of the VHCT00A but the VHCT132A has hysteresis.

This together with its schmitt trigger function allows it to be used on line receivers with slow rise/fall input signals.

All inputs and outputs are equipped with protection circuits against static discharge, giving them 2KV ESD immunity and transient excess voltage.

PIN CONNECTION AND IEC LOGIC SYMBOLS

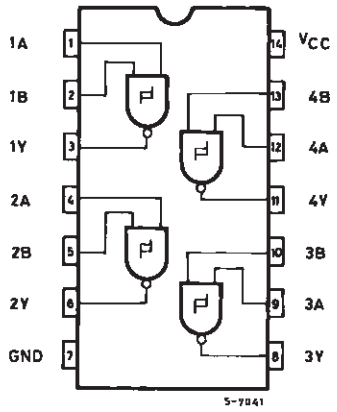

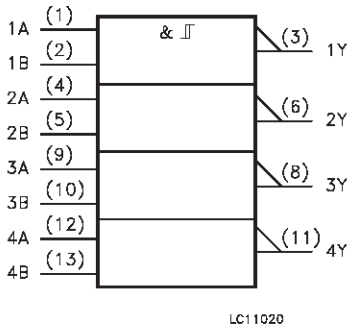

INPUT EQUIVALENT CIRCUIT

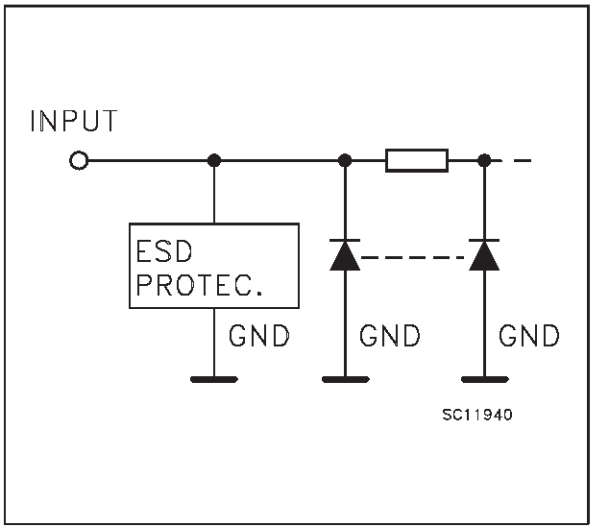

PIN DESCRIPTION

PIN No	SYMBOL	NAME AND FUNCTION
1, 4, 9, 12	1A to 4A	Data Inputs
2, 5, 10, 13	1B to 4B	Data Inputs
3, 6, 8, 11	1Y to 4Y	Data Outputs
7	GND	Ground (0V)
14	V_{CC}	Positive Supply Voltage

TRUTH TABLE

A	B	Y
L	L	H
L	H	H
H	L	H
H	H	L

ABSOLUTE MAXIMUM RATINGS

Symbol	Parameter	Value	Unit
V_{CC}	Supply Voltage	-0.5 to +7.0	V
V_I	DC Input Voltage	-0.5 to +7.0	V
V_O	DC Output Voltage (see note 1)	-0.5 to +7.0	V
V_O	DC Output Voltage (see note 2)	-0.5 to V_{CC} + 0.5	V
I_{IK}	DC Input Diode Current	- 20	mA
I_{OK}	DC Output Diode Current	± 20	mA
I_O	DC Output Current	± 25	mA
I_{CC} or I_{GND}	DC V_{CC} or Ground Current	± 50	mA
T_{stg}	Storage Temperature	-65 to +150	^oC
T_L	Lead Temperature (10 sec)	300	^oC

Absolute Maximum Ratings are those values beyond which damage to the device may occur. Functional operation under these condition is not implied.
1) V_{CC} = 0V
2) High or Low State

RECOMMENDED OPERATING CONDITIONS

Symbol	Parameter	Value	Unit
V_{CC}	Supply Voltage	4.5 to 5.5	V
V_I	Input Voltage	0 to 5.5	V
V_O	Output Voltage (see note 1)	0 to 5.5	V
V_O	Output Voltage (see note 2)	0 to V_{CC}	V
T_{op}	Operating Temperature	-40 to +85	^oC

1) V_{CC} = 0V
2) High or Low State

DC SPECIFICATIONS

Symbol	Parameter	Test Conditions		Value					Unit
		V_{CC} (V)		T_A = 25 °C			-40 to 85 °C		
				Min.	Typ.	Max.	Min.	Max.	
V_{t+}	High Level Threshold Voltage	4.5		2.0			2.0		V
		5.5		2.0			2.0		
V_{t-}	Low Level Threshold Voltage	4.5				0.6		0.6	V
		5.5				0.6		0.6	
V_h	Hysteresis Voltage	4.5		0.4		1.4	0.4	1.4	V
		5.5		0.4		1.5	0.4	1.5	
V_{OH}	High Level Output Voltage	4.5	I_O=-50 µA	4.4	4.5		4.4		V
		4.5	I_O=-8 mA	3.94			3.8		
V_{OL}	Low Level Output Voltage	4.5	I_O=50 µA		0.0	0.1		0.1	V
		4.5	I_O=8 mA			0.36		0.44	
I_I	Input Leakage Current	0 to 5.5	V_I = 5.5V or GND			±0.1		±1.0	µA
I_{CC}	Quiescent Supply Current	5.5	V_I = V_{CC} or GND			2		20	µA
ΔI_{CC}	Additional Worst Case Supply Current	5.5	One Input at 3.4V, other input at V_{CC} or GND			1.35		1.5	mA
I_{OPD}	Output Leakage Current	0	V_{OUT} = 5.5V			0.5		5.0	µA

AC ELECTRICAL CHARACTERISTICS (Input t_r = t_f =3 ns)

Symbol	Parameter	Test Condition			Value					Unit
		V_{CC} (*) (V)	C_L (pF)		T_A = 25 °C			-40 to 85 °C		
					Min.	Typ.	Max.	Min.	Max.	
t_{PLH} t_{PHL}	Propagation Delay Time	5.0	15			6.5	8.8	1.0	10.4	ns
		5.0	50			7.2	9.8	1.0	11.4	

(*) Voltage range is 5V ± 0.5V

CAPACITIVE CHARACTERISTICS

Symbol	Parameter	Test Conditions	Value					Unit
			T_A = 25 °C			-40 to 85 °C		
			Min.	Typ.	Max.	Min.	Max.	
C_{IN}	Input Capacitance			6	10		10	pF
C_{PD}	Power Dissipation Capacitance (note 1)			18				pF

1) C_{PD} is defined as the value of the IC's internal equivalent capacitance which is calculated from the operating current consumption without load. (Refer to Test Circuit). Average operating current can be obtained by the following equation. $I_{CC}(opr) = C_{PD} \bullet V_{CC} \bullet f_{IN} + I_{CC}/4$ (per Gate)

DYNAMIC SWITCHING CHARACTERISTICS

Symbol	Parameter	Test Conditions		Value					Unit
		V_{CC} (V)		T_A = 25 °C			-40 to 85 °C		
				Min.	Typ.	Max.	Min.	Max.	
V_{OLP}	Dynamic Low Voltage Quiet Output (note 1, 2)	5.0	C_L = 50 pF		0.3	0.8			V
V_{OLV}				-0.8	-0.3				
V_{IHD}	Dynamic High Voltage Input (note 1, 3)	5.0		2.0					
V_{ILD}	Dynamic Low Voltage Input (note 1, 3)	5.0				0.6			

1) Worst case package.
2) Max number of outputs defined as (n). Data inputs are driven 0V to 3.0V, (n -1) outputs switching and one output at GND.
3) Max number of data inputs (n) switching. (n-1) switching 0V to 3.0V. Inputs under test switching: 3.0V to threshold (V_{ILD}), 0V to threshold (V_{IHD}), f=1MHz.

TEST CIRCUIT

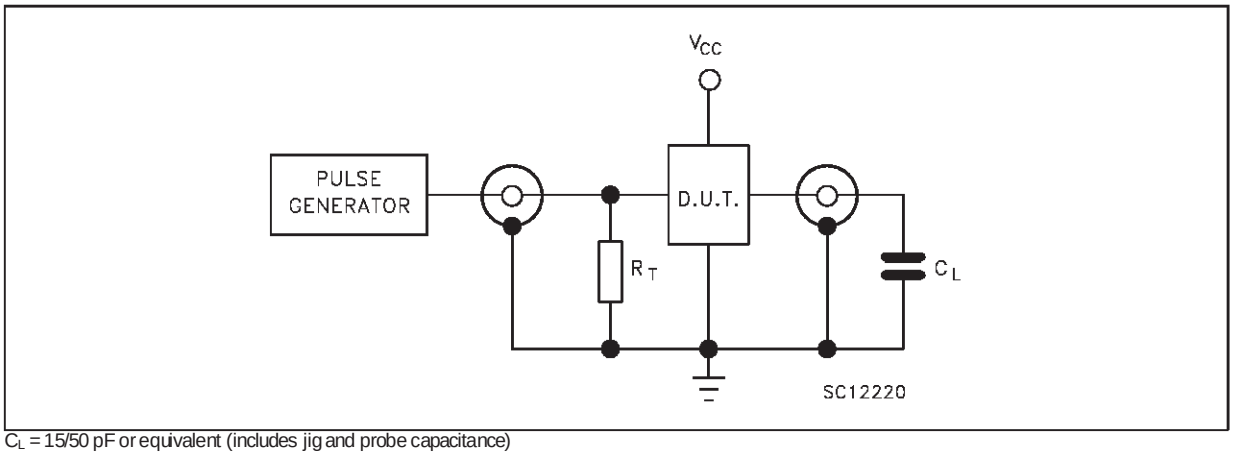

C_L = 15/50 pF or equivalent (includes jig and probe capacitance)
R_T = Z_{OUT} of pulse generator (typically 50Ω)

WAVEFORM: PROPAGATION DELAYS (f=1MHz; 50% duty cycle)

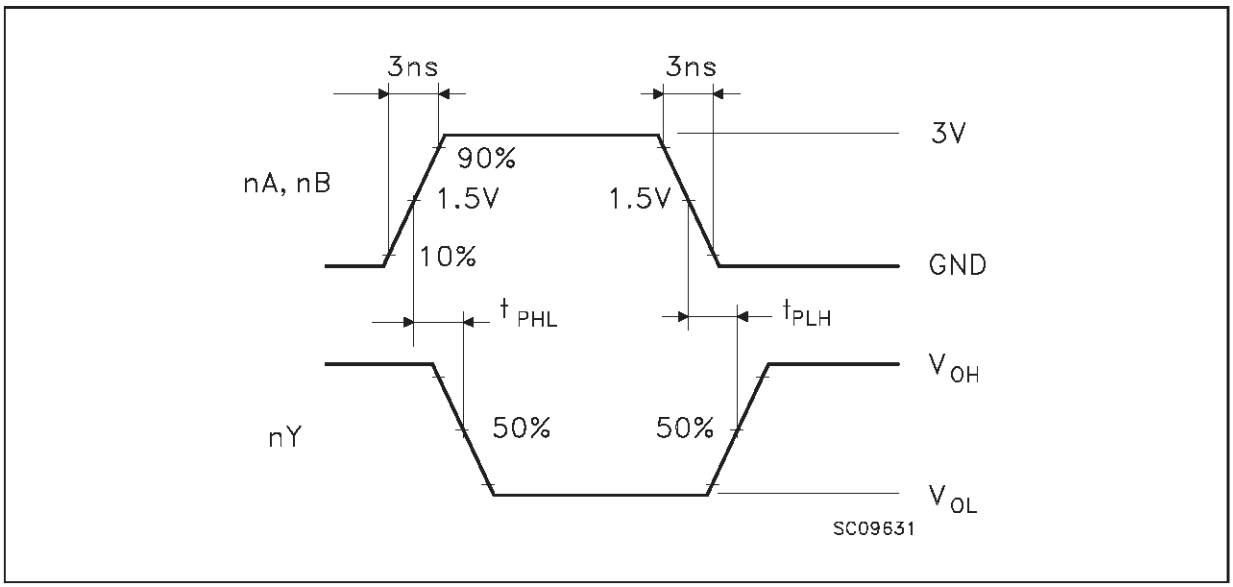

SO-14 MECHANICAL DATA

DIM.	mm			inch		
	MIN.	TYP.	MAX.	MIN.	TYP.	MAX.
A			1.75			0.068
a1	0.1		0.2	0.003		0.007
a2			1.65			0.064
b	0.35		0.46	0.013		0.018
b1	0.19		0.25	0.007		0.010
C		0.5			0.019	
c1	45 (typ.)					
D	8.55		8.75	0.336		0.344
E	5.8		6.2	0.228		0.244
e		1.27			0.050	
e3		7.62			0.300	
F	3.8		4.0	0.149		0.157
G	4.6		5.3	0.181		0.208
L	0.5		1.27	0.019		0.050
M			0.68			0.026
S	8 (max.)					

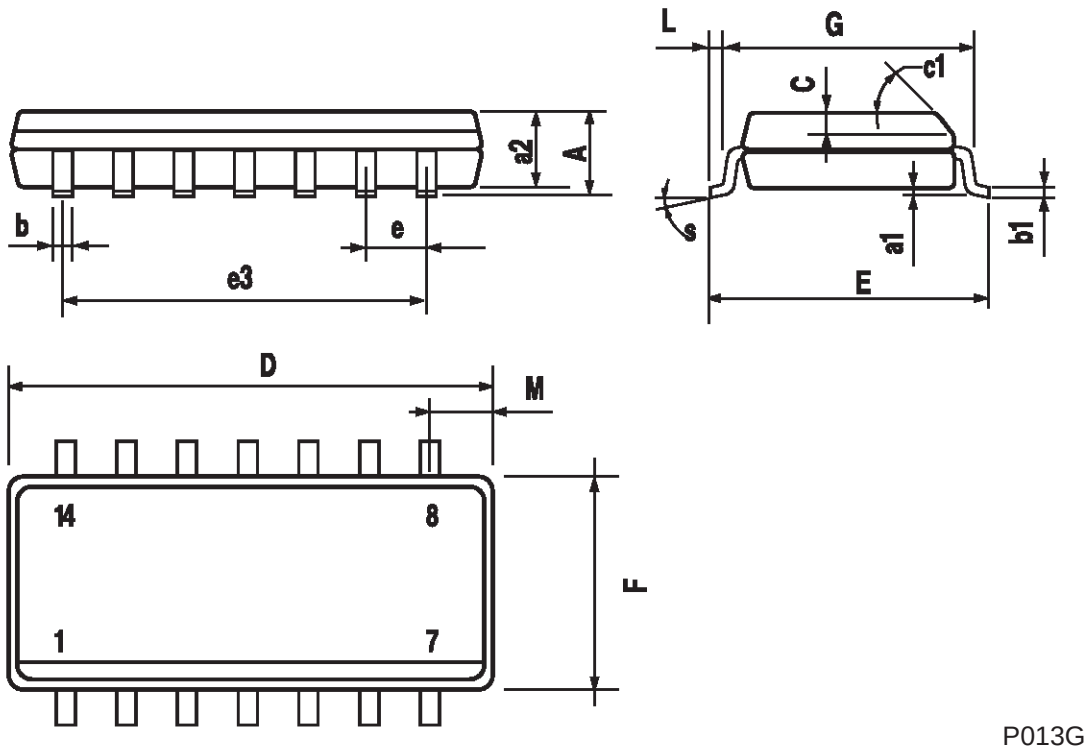

P013G

TSSOP14 MECHANICAL DATA

DIM.	mm			inch		
	MIN.	TYP.	MAX.	MIN.	TYP.	MAX.
A			1.1			0.433
A1	0.05	0.10	0.15	0.002	0.004	0.006
A2	0.85	0.9	0.95	0.335	0.354	0.374
b	0.19		0.30	0.0075		0.0118
c	0.09		0.20	0.0035		0.0079
D	4.9	5	5.1	0.193	0.197	0.201
E	6.25	6.4	6.5	0.246	0.252	0.256
E1	4.3	4.4	4.48	0.169	0.173	0.176
e		0.65 BSC			0.0256 BSC	
K	0°	4°	8°	0°	4°	8°
L	0.50	0.60	0.70	0.020	0.024	0.028

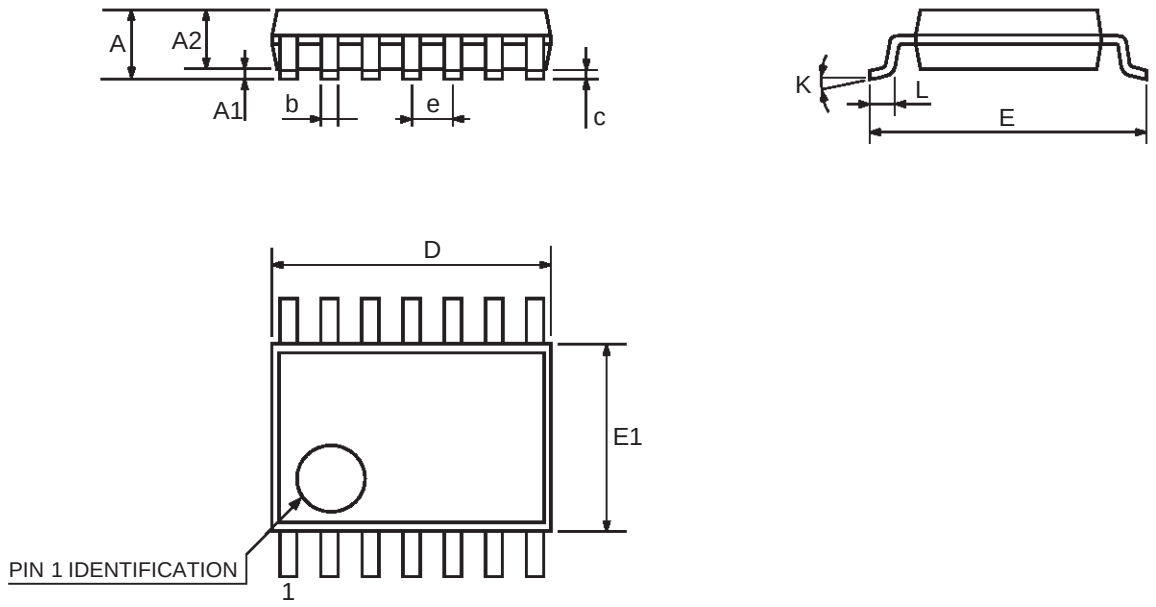

Information furnished is believed to be accurate and reliable. However, STMicroelectronics assumes no responsibility for the consequences of use of such information nor for any infringement of patents or other rights of third parties which may result from its use. No license is granted by implication or otherwise under any patent or patent rights of STMicroelectronics. Specification mentioned in this publication are subject to change without notice. This publication supersedes and replaces all information previously supplied. STMicroelectronics products are not authorized for use as critical components in life support devices or systems without express written approval of STMicroelectronics.

The ST logo is a registered trademark of STMicroelectronics

© 2000 STMicroelectronics – Printed in Italy – All Rights Reserved

STMicroelectronics GROUP OF COMPANIES

Australia - Brazil - China - Finland - France - Germany - Hong Kong - India - Italy - Japan - Malaysia - Malta - Morocco
Singapore - Spain - Sweden - Switzerland - United Kingdom - U.S.A.

http://www.st.com

ООО «ЛайфЭлектроникс» “LifeElectronics” LLC

ИНН 7805602321 КПП 780501001 Р/С 40702810122510004610 ФАКБ "АБСОЛЮТ БАНК" (ЗАО) в г.Санкт-Петербурге К/С 30101810900000000703 БИК 044030703

Компания «Life Electronics» занимается поставками электронных компонентов импортного и отечественного производства от производителей и со складов крупных дистрибьюторов Европы, Америки и Азии.

С конца 2013 года компания активно расширяет линейку поставок компонентов по направлению коаксиальный кабель, кварцевые генераторы и конденсаторы (керамические, пленочные, электролитические), за счёт заключения дистрибьюторских договоров

Мы предлагаем:

- *Конкурентоспособные цены и скидки постоянным клиентам.*
- *Специальные условия для постоянных клиентов.*
- *Подбор аналогов.*
- *Поставку компонентов в любых объемах, удовлетворяющих вашим потребностям.*

- *Приемлемые сроки поставки, возможна ускоренная поставка.*
- *Доставку товара в любую точку России и стран СНГ.*
- *Комплексную поставку.*
- *Работу по проектам и поставку образцов.*
- *Формирование склада под заказчика.*

- *Сертификаты соответствия на поставляемую продукцию (по желанию клиента).*
- *Тестирование поставляемой продукции.*
- *Поставку компонентов, требующих военную и космическую приемку.*
- *Входной контроль качества.*
- *Наличие сертификата ISO.*

В составе нашей компании организован Конструкторский отдел, призванный помогать разработчикам, и инженерам.

Конструкторский отдел помогает осуществить:

- *Регистрацию проекта у производителя компонентов.*
- *Техническую поддержку проекта.*
- *Защиту от снятия компонента с производства.*
- *Оценку стоимости проекта по компонентам.*
- *Изготовление тестовой платы монтаж и пусконаладочные работы.*

Тел: +7 (812) 336 43 04 (многоканальный)
Email: org@lifeelectronics.ru

www.lifeelectronics.ru