THIS DRAWING IS UNPUBLISHED. RELEASED FOR PUBLICATION -,- .
© COPYRIGHT - By - ALL RIGHTS RESERVED.

LOC	DIST
AD	00

REVISIONS

P	LTR	DESCRIPTION	DATE	DWN	APVD
	J4	REVISED PER ECO-11-004587	11MAR11	RK	HMR

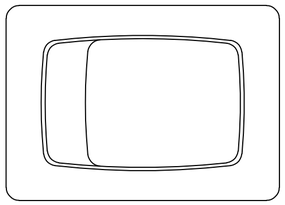

PANEL CUT OUT

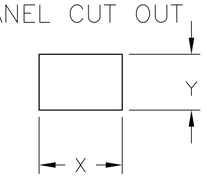

2.00–3.00	19.8–0.1	13.0+0.1
1.25–2.00	19.4–0.1	13.0+0.1
0.75–1.25	19.2–0.1	13.0+0.1
PANEL THICKNESS	X	Y

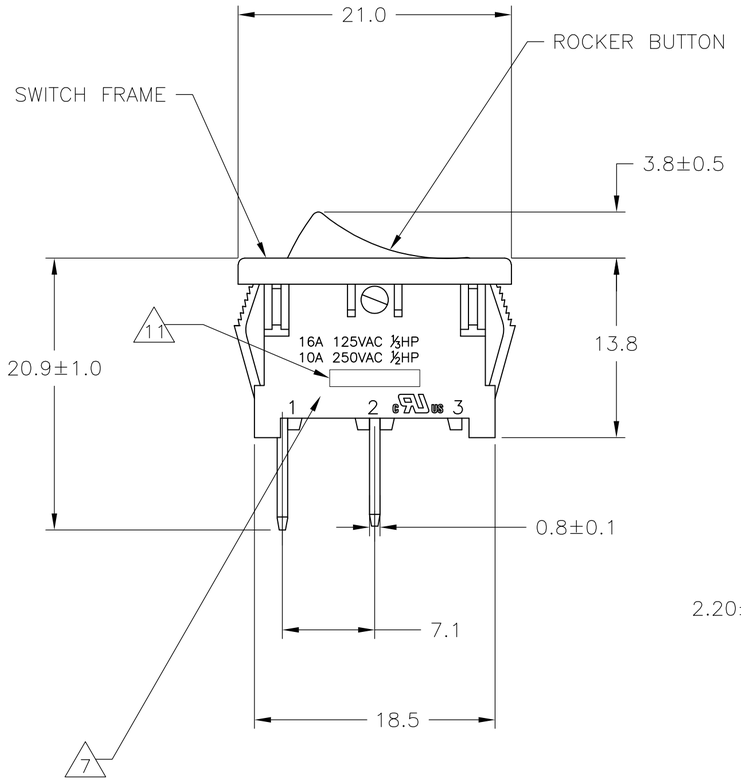

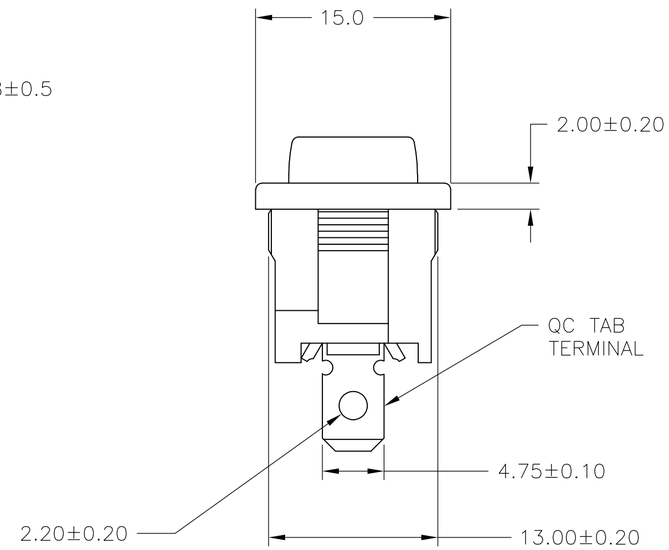

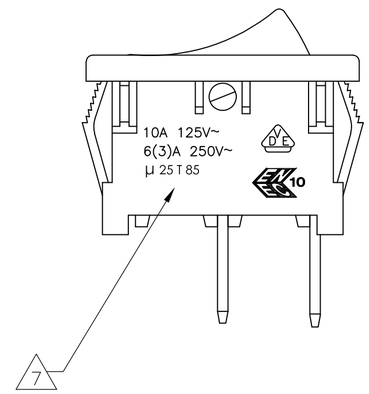

SWITCH FUNCTION A1
CIRCUIT DIAGRAM

SWITCH FUNCTION A3
CIRCUIT DIAGRAM

1571076

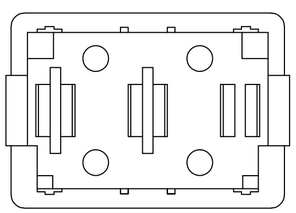

1571076–9 SHOWN

THIS DRAWING IS A CONTROLLED DOCUMENT.

DIMENSIONS: MM

TOLERANCES UNLESS OTHERWISE SPECIFIED:

0 PLC	±	–
1 PLC	±	0.30
2 PLC	±	0.05
3 PLC	±	–
4 PLC	±	–
ANGLES	±	–

MATERIAL 1 FINISH 2

DWN M.BINNER 25FEB2002
CHK J.MOSIER –
APVD – –
PRODUCT SPEC NOT APPLICABLE
APPLICATION SPEC NOT APPLICABLE
WEIGHT –

TE Connectivity

NAME POWER ROCKER SWITCH, 13.0mm X 19.2mm PANEL CUT-OUT SIZE, SINGLE POLE, SINGLE THROW, TWO TERMINALS, NON-ILLUMINATED

SIZE	CAGE CODE	DRAWING NO	RESTRICTED TO
A2	00779	C-1571076	–

CUSTOMER DRAWING SCALE 3:1 SHEET 1 OF 4 REV J4

THIS DRAWING IS UNPUBLISHED. RELEASED FOR PUBLICATION -,- .
© COPYRIGHT - By - ALL RIGHTS RESERVED.

LOC	DIST
AD	00

REVISIONS

P	LTR	DESCRIPTION	DATE	DWN	APVD
	–	SEE SHEET 1	–	–	–

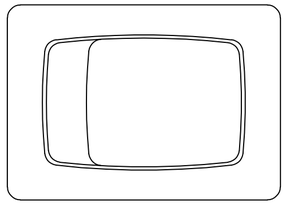

PANEL CUT OUT

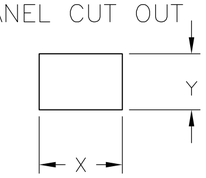

2.00–3.00	19.8–0.1	13.0+0.1
1.25–2.00	19.4–0.1	13.0+0.1
0.75–1.25	19.2–0.1	13.0+0.1
PANEL THICKNESS	X	Y

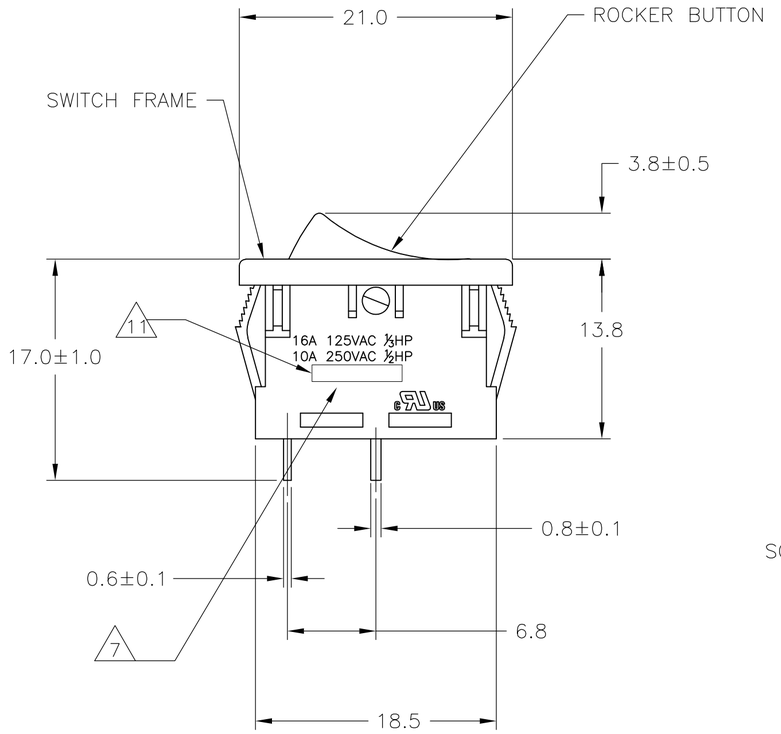

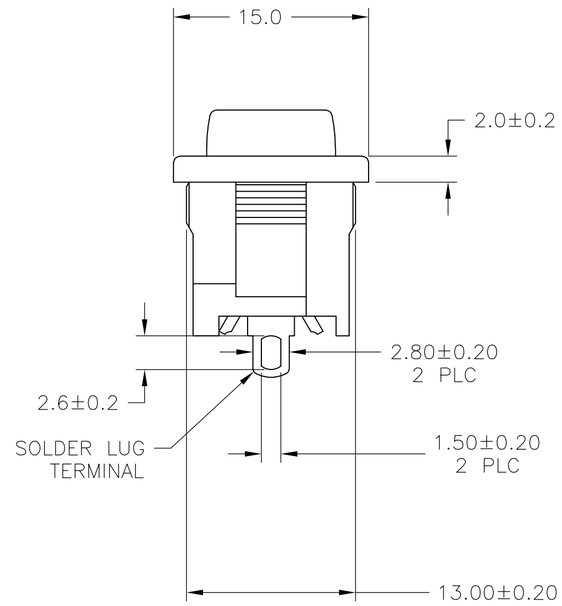

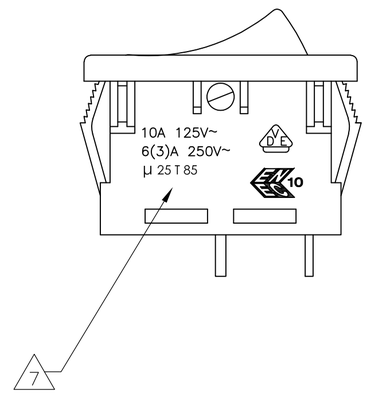

SWITCH FUNCTION A1
CIRCUIT DIAGRAM

SWITCH FUNCTION A3
CIRCUIT DIAGRAM

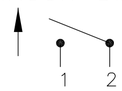

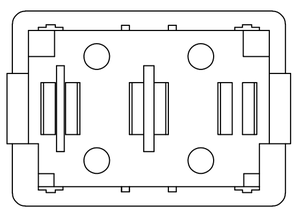

1–1571076–2 SHOWN

THIS DRAWING IS A CONTROLLED DOCUMENT.

DIMENSIONS: MM

TOLERANCES UNLESS OTHERWISE SPECIFIED:

0 PLC	±	–
1 PLC	±	0.30
2 PLC	±	0.05
3 PLC	±	–
4 PLC	±	–
ANGLES	±	–

MATERIAL 1 FINISH 2

DWN M.BINNER 25FEB2002
CHK J.MOSIER –
APVD – –
PRODUCT SPEC NOT APPLICABLE
APPLICATION SPEC NOT APPLICABLE
WEIGHT –

TE Connectivity

NAME POWER ROCKER SWITCH, 13.0mm X 19.2mm PANEL CUT–OUT SIZE, SINGLE POLE, SINGLE THROW, TWO TERMINALS, NON–ILLUMINATED

SIZE	CAGE CODE	DRAWING NO	RESTRICTED TO
A2	00779	C-1571076	–

CUSTOMER DRAWING SCALE 3:1 SHEET 2 OF 4 REV J4

1571076

1471–9 (3/11)

THIS DRAWING IS UNPUBLISHED. RELEASED FOR PUBLICATION -,- .
© COPYRIGHT - By - ALL RIGHTS RESERVED.

LOC	DIST
AD	00

REVISIONS

P	LTR	DESCRIPTION	DATE	DWN	APVD
	-	SEE SHEET 1	-	—	—

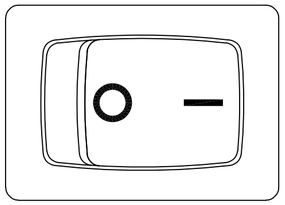

PANEL CUT OUT

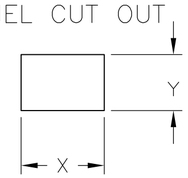

2.00–3.00	19.8–0.1	13.0+0.1
1.25–2.00	19.4–0.1	13.0+0.1
0.75–1.25	19.2–0.1	13.0+0.1
PANEL THICKNESS	X	Y

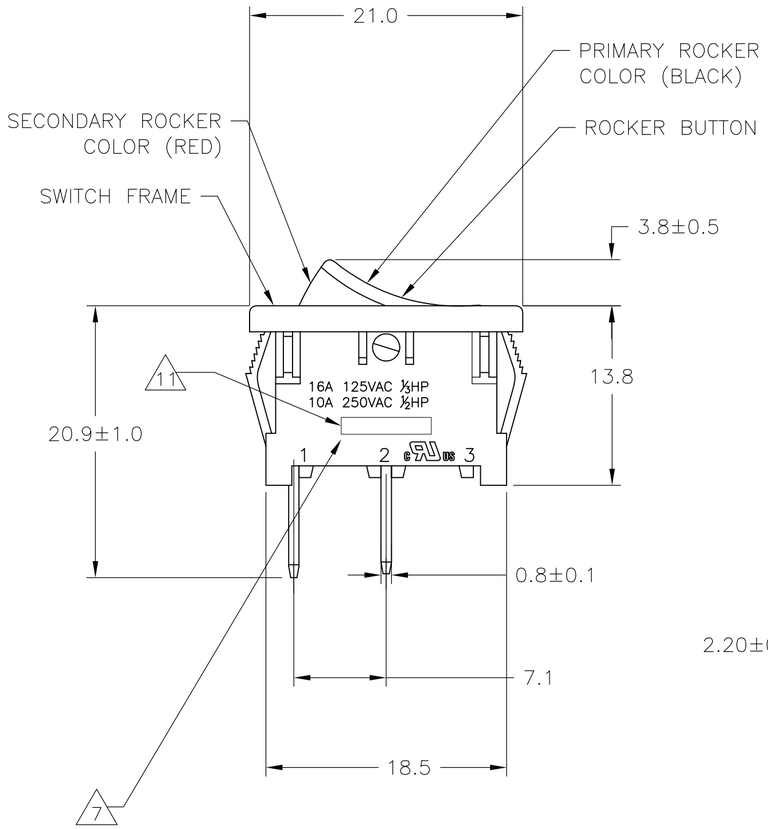

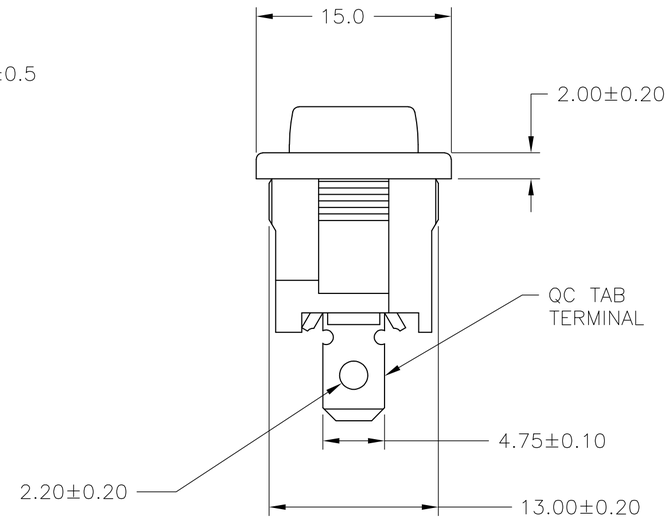

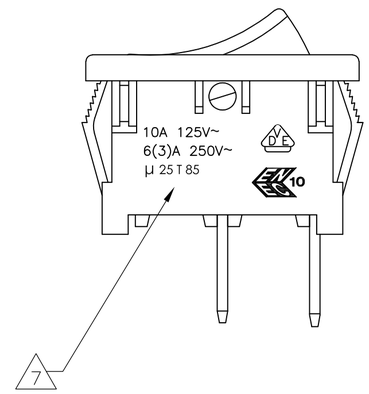

SWITCH FUNCTION A2
CIRCUIT DIAGRAM

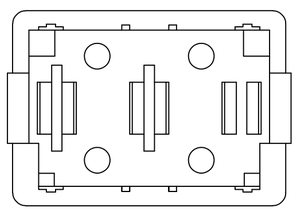

6–1571076–7 SHOWN
(WITH DUAL COLOR ROCKER BUTTON)

THIS DRAWING IS A CONTROLLED DOCUMENT.

DIMENSIONS: MM

TOLERANCES UNLESS OTHERWISE SPECIFIED:
0 PLC ± –
1 PLC ± 0.30
2 PLC ± 0.05
3 PLC ± –
4 PLC ± –
ANGLES ± –

MATERIAL 1
FINISH 2

DWN M.BINNER 25FEB2002
CHK J.MOSIER –
APVD — –
PRODUCT SPEC NOT APPLICABLE
APPLICATION SPEC NOT APPLICABLE
WEIGHT —

TE Connectivity

NAME POWER ROCKER SWITCH, 13.0mm X 19.2mm PANEL CUT–OUT SIZE, SINGLE POLE, SINGLE THROW, TWO TERMINALS, NON–ILLUMINATED

SIZE	CAGE CODE	DRAWING NO	RESTRICTED TO
A2	00779	C–1571076	—

CUSTOMER DRAWING | SCALE 3:1 | SHEET 3 OF 4 | REV J4

1571076

THIS DRAWING IS UNPUBLISHED. RELEASED FOR PUBLICATION -,- .
© COPYRIGHT - By - ALL RIGHTS RESERVED.

LOC	DIST
AD	00

REVISIONS

P	LTR	DESCRIPTION	DATE	DWN	APVD
	–	SEE SHEET 1	–	–	–

LEGACY PART NUMBER

X_1X_2 | X_3 | X_4 | X_5X_6 — X_7X_8 | X_9 — X_{10} | X_{11} | X_{12} | X_{13} | X_{14}

SWITCH TYPE: X_1X_2 = PR – POWER ROCKER

NOMINAL PANEL CUT OUT SIZE: X_3 = A – 13.0x19.2

NUMBER OF POLES: X_4 = S – SINGLE

SWITCH FUNCTION: X_5X_6 =
A1 – ON–OFF, WITH OPAQUE, SINGLE–COLOR ROCKER BUTTON
A2 – ON–OFF, WITH OPAQUE, DUAL–COLOR ROCKER BUTTON
A3 – (ON)–OFF, WITH OPAQUE, SINGLE–COLOR ROCKER BUTTON

CURRENT RATING: X_7X_8 = 16 – 6

TERMINAL TYPE: X_9 = F – QC TAB
L – SOLDER LUG

FRAME COLOR: X_{10} = B – BLACK
W – WHITE

ROCKER COLOR: X_{11} = B – BLACK
G – GREEN
R – RED
W – WHITE

SECONDARY ROCKER COLOR: X_{12} = Ø – NOT APPLICABLE
B – BLACK
G – GREEN
R – RED
W – WHITE

LEGEND TEXT PATTERN: X_{13} =

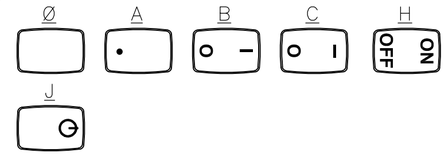

LEGEND TEXT COLOR: X_{14} = Ø – NOT APPLICABLE
G – GREEN
R – RED
B – BLACK
W – WHITE

1 MATERIALS:
ROCKER BUTTON & HOUSING FRAME: NYLON 66, UL 94 V–2.
TERMINAL, ACTIVE CONTACTOR: COPPER ALLOY PER ASTM B152/B152M
PLUNGER: COPPER ALLOY PER ASTM B036
SPRING: STEEL WIRE PER ASTM A228/A228M
CONTACT: SILVER–TIN OXIDE
BOTTOM PLATE(SOLDER LUG OPTION): PHENOLIC LAMINATE

2 FINISH:
TERMINAL, ACTIVE CONTACTOR: 1.0μm MIN SILVER
PLUNGER: 3.0μm MIN NICKEL

3. ELECTRICAL SPECIFICATIONS:
CURRENT AND VOLTAGE: 6
CONTACT RESISTANCE (INITIAL): <100mΩ (5V, 1A DC)
DIELECTRIC STRENGTH (INITIAL): >1000 VAC, 1 MINUTE
INSULATION RESISTANCE (INITIAL): >100MΩ MIN (500VDC BETWEEN OPEN CONTACTS)
INRUSH CURRENT: 50A / 3msec (CAPACITIVE LOAD)
ELECTRICAL LIFE ENDURANCE: >6000 OPERATIONS,
TEMPERATURE RISE AT TERMINALS: <30°C, 6000 OPERATIONS (AMBIENT CONDITIONS: 25±2°C AND 65±5%R.H)
DEGREE OF PROTECTCION: IP40

4. MECHANICAL SPECIFICATIONS:
ACTUATING FORCE: 150g MIN, 650g MAX
OPERATING LIFE ENDURANCE: >100,000 OPERATIONS
TERMINAL RETENTION FORCE: >2.5kg– SOLDER LUG
>6.8kg– QC TAB

5. ENVIRONMENTAL SPECIFICATIONS:
AMBIENT TEMPERATURE: –20°C TO +85°C
HUMIDITY: MAX 85%
SALT SPRAY: NO REMAKABLE RUST IN METAL PARTS. (5%SALT / 35°C 24HRS)
SHOCK: NO MECHANICAL DEFECT OR DAMAGE. (100g / 10MSEC/ X,Y,Z 3 TIMES)
VIBRATION: NO MECHANICAL DEFECT OR DAMAGE. (10–55Hz /1.5mm/ X,Y,Z 2HRS)
DEGREE OF PROTECTION: IP40

6 UL: 16A@125VAC ⅓HP / 10A@250VAC ½HP
ENEC: 10A 125V~, 6(3)A 250V~ μ25T85.

7 ELECTRICAL RATINGS, AGENCY APPROVAL LOGOS, TERMINAL IDENTIFICATION NUMBERS, MOLDED APPROXIMATELY AS SHOWN ON THE SIDE OF THE SWITCH HOUSING.

8. COMPONENT RECOGNIZED TO US AND CANADIAN STANDARDS, UL FILE NO. E46765.

9. COMPONENT RECOGNIZED TO EUROPEAN STANDARDS, (ENEC & VDE). MARKS LICENSE NO. 40006757.

10. ROHS 2002/95/EC COMPLIANT.

11 TE CONNECTIVITY LOGO LOCATED APPROXIMATELY AS SHOWN

SHEET REF.	LEGACY PART NUMBER	PART NUMBER
3	PRASA2–16F–BBRBR	6–1571076–7
2	PRASA1–16L–BR000	6–1571076–6
1	PRASA1–16F–BR000	6–1571076–5
2	PRASA1–16L–BR0BW	3–1571076–0
1	PRASA3–16F–BB000	2–1571076–6
1	PRASA3–16F–BB0JW	2–1571076–1
1	PRASA1–16F–BB0HW	2–1571076–0
2	PRASA1–16L–BB0CW	1–1571076–4
2	PRASA1–16L–BB0BW	1–1571076–3
2	PRASA1–16L–BB000	1–1571076–2
1	PRASA1–16F–BB0CW	1–1571076–1
1	PRASA1–16F–BB0BW	1–1571076–0
1	PRASA1–16F–BB000	1571076–9

THIS DRAWING IS A CONTROLLED DOCUMENT.

DIMENSIONS: MM

TOLERANCES UNLESS OTHERWISE SPECIFIED:
0 PLC ± –
1 PLC ± 0.30
2 PLC ± 0.05
3 PLC ± –
4 PLC ± –
ANGLES ± –

MATERIAL 1 FINISH 2

DWN M.BINNER 25FEB2002
CHK J.MOSIER –
APVD – –
PRODUCT SPEC NOT APPLICABLE
APPLICATION SPEC NOT APPLICABLE
WEIGHT –

TE Connectivity

NAME POWER ROCKER SWITCH, 13.0mm X 19.2mm PANEL CUT–OUT SIZE, SINGLE POLE, SINGLE THROW, TWO TERMINALS, NON–ILLUMINATED

SIZE	CAGE CODE	DRAWING NO	RESTRICTED TO
A2	00779	C–1571076	–

CUSTOMER DRAWING SCALE 3:1 SHEET 4 OF 4 REV J4

1571076

ООО «ЛайфЭлектроникс» “LifeElectronics” LLC

ИНН 7805602321 КПП 780501001 Р/С 40702810122510004610 ФАКБ "АБСОЛЮТ БАНК" (ЗАО) в г.Санкт-Петербурге К/С 30101810900000000703 БИК 044030703

Компания «Life Electronics» занимается поставками электронных компонентов импортного и отечественного производства от производителей и со складов крупных дистрибьюторов Европы, Америки и Азии.

С конца 2013 года компания активно расширяет линейку поставок компонентов по направлению коаксиальный кабель, кварцевые генераторы и конденсаторы (керамические, пленочные, электролитические), за счёт заключения дистрибьюторских договоров

Мы предлагаем:

- *Конкурентоспособные цены и скидки постоянным клиентам.*
- *Специальные условия для постоянных клиентов.*
- *Подбор аналогов.*
- *Поставку компонентов в любых объемах, удовлетворяющих вашим потребностям.*

- *Приемлемые сроки поставки, возможна ускоренная поставка.*
- *Доставку товара в любую точку России и стран СНГ.*
- *Комплексную поставку.*
- *Работу по проектам и поставку образцов.*
- *Формирование склада под заказчика.*

- *Сертификаты соответствия на поставляемую продукцию (по желанию клиента).*
- *Тестирование поставляемой продукции.*
- *Поставку компонентов, требующих военную и космическую приемку.*
- *Входной контроль качества.*
- *Наличие сертификата ISO.*

В составе нашей компании организован Конструкторский отдел, призванный помогать разработчикам, и инженерам.

Конструкторский отдел помогает осуществить:

- *Регистрацию проекта у производителя компонентов.*
- *Техническую поддержку проекта.*
- *Защиту от снятия компонента с производства.*
- *Оценку стоимости проекта по компонентам.*
- *Изготовление тестовой платы монтаж и пусконаладочные работы.*

Тел: +7 (812) 336 43 04 (многоканальный)
Email: org@lifeelectronics.ru

www.lifeelectronics.ru