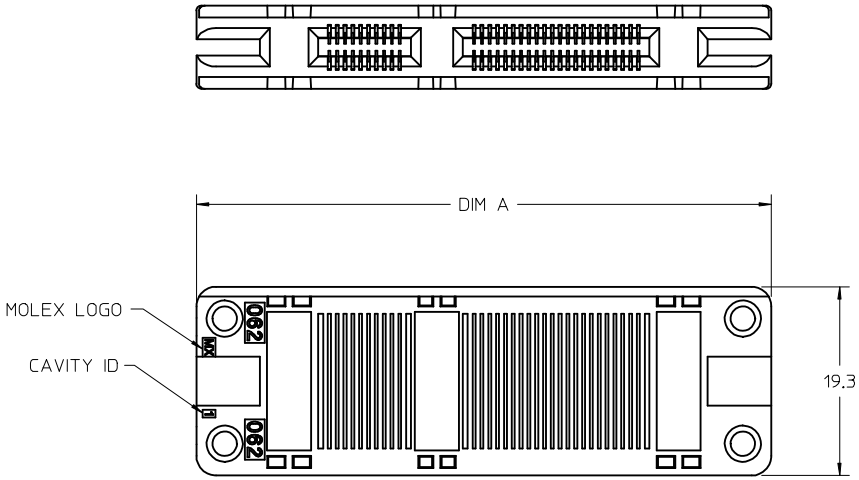

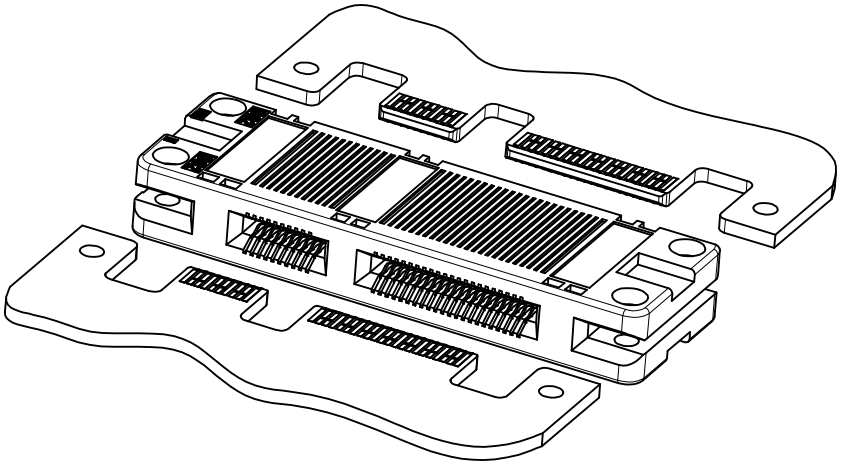

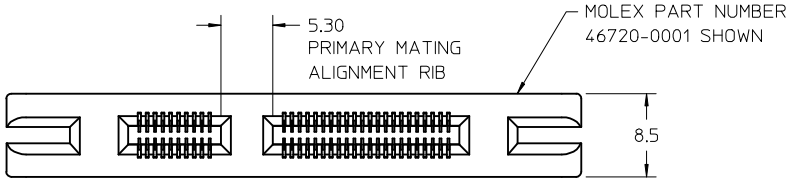

DIM B	PCB THK (in)
3.5	.062"
3.1	.093"
2.9	.110"
2.7	.125"

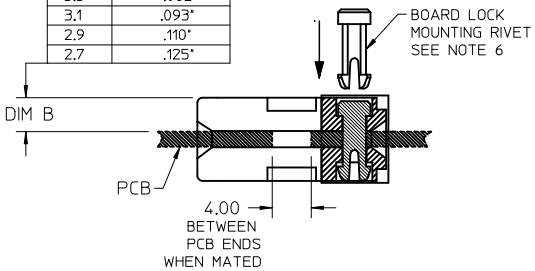

NOTES:

1. MATERIAL:
   HOUSING: LCP, UL94V-0, BLACK
   TERMINAL: BRASS
2. FINISH: SELECT GOLD: 0.76μm MIN, OVERALL NICKEL: 3.80 μm MIN
3. ALL DIMENSIONS ARE FOR REFERENCE ONLY UNLESS OTHERWISE SPECIFIED.
4. PRODUCT SPECIFICATION: PS-46720-001
5. PACKAGING SPECIFICATION: PK-46720-001
6. ▼ SPLIT PAD LAYOUT SHOWN FOR REFERENCE ONLY. CUSTOMER CAN DESIGNATE GROUND AND SIGNAL PAD LAYOUT BASED ON INTERNAL REQUIREMENTS. CUSTOMER SHOULD SEE MOLEX DOCUMENT # AS-46720-002 FOR RECOMMENDATIONS.
7. OPTIONAL BOARD LOCK MOUNTING RIVET AVAILABLE. MOLEX PART NUMBER 46720-7710. MOLEX RIVET REMOVAL TOOL NUMBER 638123502. SEE SD-46720-7710 FOR RIVET SALES DRAWING.

REPLACED SD-46720-001
EC NO: UCP2013-1394 2012/10/24
DRWN: TGREGORI
CHKD:
APPR: JCOMERCI 2012/10/30
DESCRIPTION
REV
D

QUALITY SYMBOLS
FA=0
FC=0
FP=0
▼=1

GENERAL TOLERANCES (UNLESS SPECIFIED)	mm	INCH
4 PLACES	± ---	± ---
3 PLACES	± ---	± ---
2 PLACES	± ---	± ---
1 PLACE	± ---	± ---
ANGULAR ±1/2°		

DRAFT WHERE APPLICABLE MUST REMAIN WITHIN DIMENSIONS

DIMENSION STYLE: MM ONLY
SCALE: 2:1
DESIGN UNITS: METRIC
THIRD ANGLE PROJECTION

DRAWN BY: TGREGORI DATE: 2010/03/24
CHECKED BY: DATE:
APPROVED BY: JCOMERCI DATE: 2010/04/12
MATERIAL NO.: SEE SHEET 7

TITLE: ASSEMBLY EDGELINE COEDGE CONNECTOR, 100 OHM

molex MOLEX INCORPORATED

DOCUMENT NO.: SD-46720-0000
SHEET NO.: 1 OF 7

SIZE: B

THIS DRAWING CONTAINS INFORMATION THAT IS PROPRIETARY TO MOLEX INCORPORATED AND SHOULD NOT BE USED WITHOUT WRITTEN PERMISSION

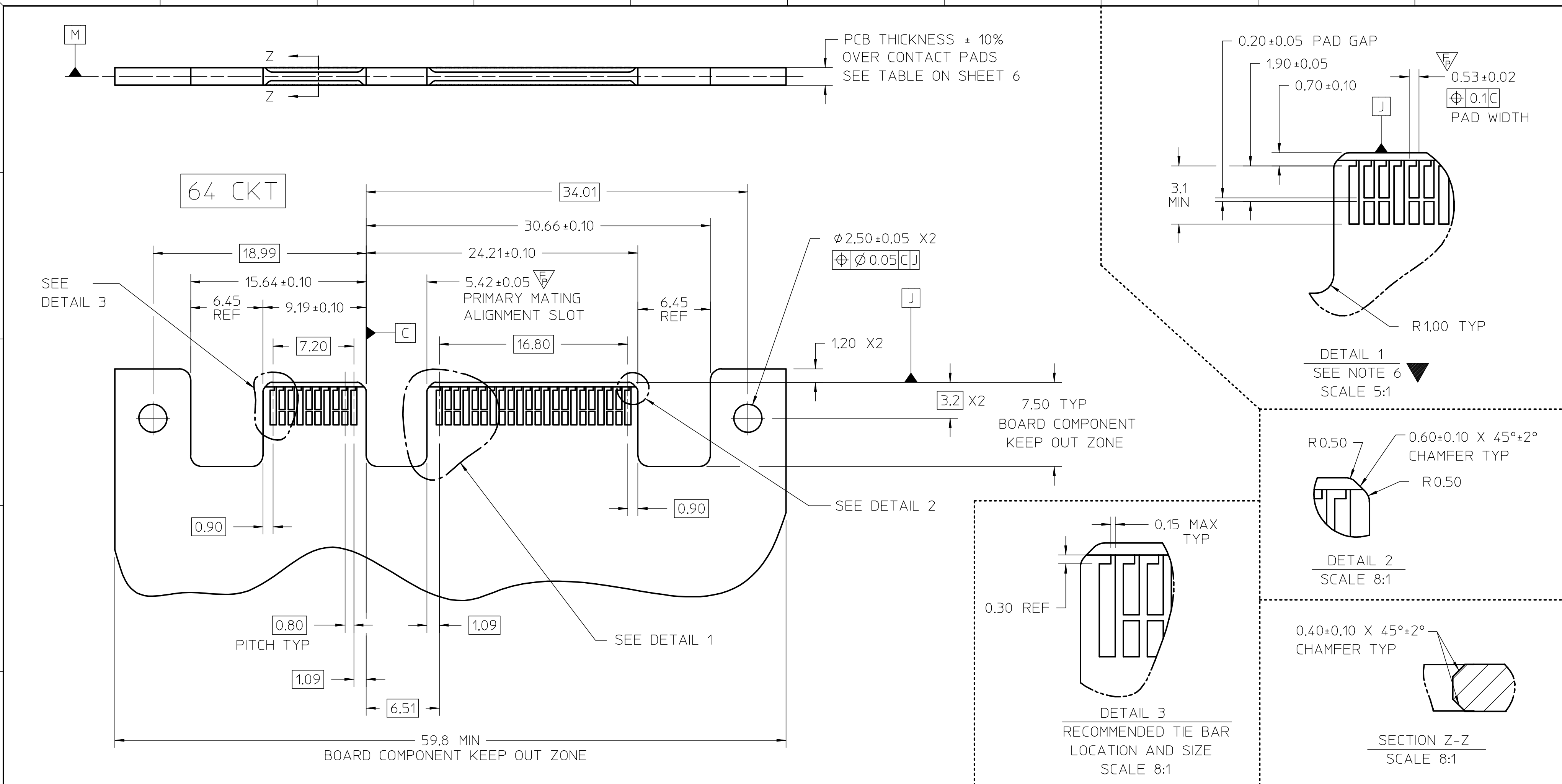

NOTE:
CONTACT MOLEX FOR CUSTOMER APPLICATIONS WITH MULTIPLE CONNECTORS PER BOARD

REV	DESCRIPTION			
D	SEE SHEET 1	EC NO: UCP2013-1394	DRWN: TGREGORI 2012/10/24	CH'KD: APPR: JCOMERCI 2012/10/30

QUALITY SYMBOLS: FA=0, FC=0, FP=2, ▼=2

GENERAL TOLERANCES (UNLESS SPECIFIED)	mm	INCH
4 PLACES	± ---	± ---
3 PLACES	± ---	± ---
2 PLACES	± ---	± ---
1 PLACE	± ---	± ---
ANGULAR ±1/2°		

DRAFT WHERE APPLICABLE MUST REMAIN WITHIN DIMENSIONS

DIMENSION STYLE: MM ONLY
SCALE: 3:1
DESIGN UNITS: METRIC
THIRD ANGLE PROJECTION

DRAWN BY: TGREGORI DATE: 2010/03/24
CHECKED BY: DATE:
APPROVED BY: JCOMERCI DATE: 2010/04/12

TITLE: ASSEMBLY EDGELINE COEDGE CONNECTOR, 100 OHM

molex MOLEX INCORPORATED

MATERIAL NO.: SEE SHEET 7
DOCUMENT NO.: SD-46720-0000
SHEET NO.: 2 OF 7
SIZE: B

THIS DRAWING CONTAINS INFORMATION THAT IS PROPRIETARY TO MOLEX INCORPORATED AND SHOULD NOT BE USED WITHOUT WRITTEN PERMISSION

108 CKT

ALL DIMENSIONS ARE THE SAME AS 64 CKT (SHEET 2) UNLESS OTHERWISE SPECIFIED

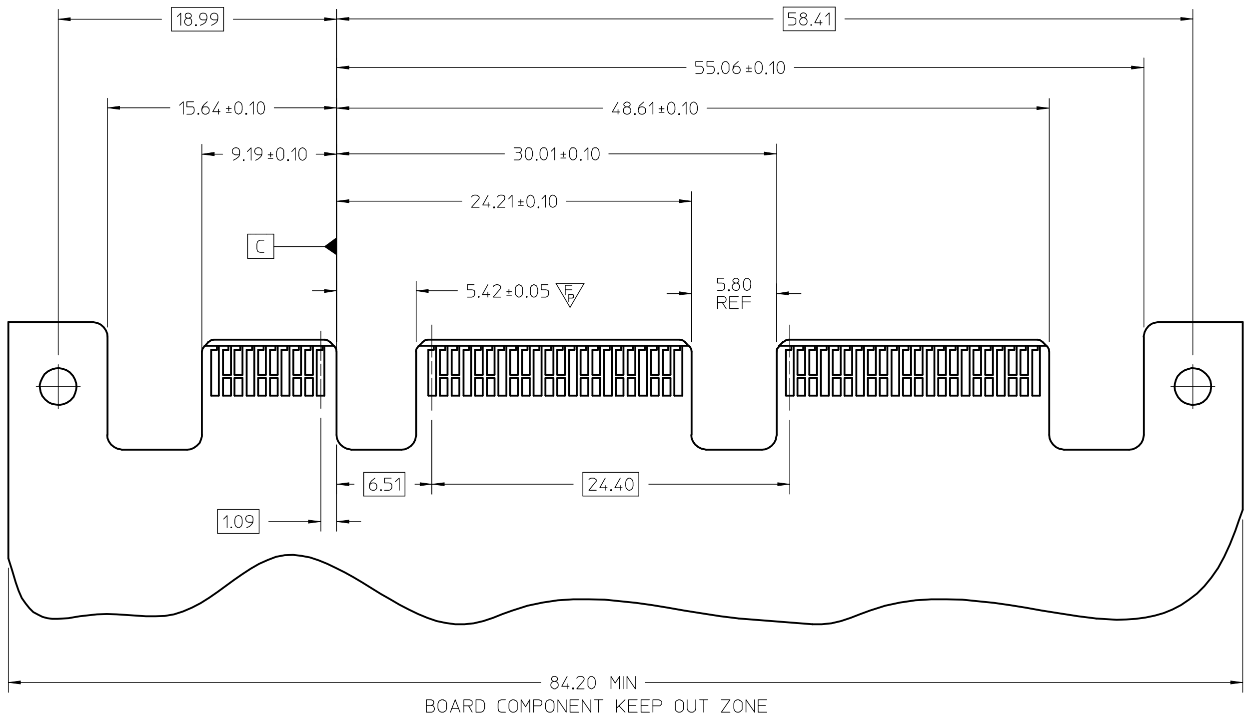

NOTE:
CONTACT MOLEX FOR CUSTOMER APPLICATIONS WITH MULTIPLE CONNECTORS PER BOARD

REV	DESCRIPTION		
D	SEE SHEET 1 EC NO: UCP2013-1394	DRWN:TGREGORI 2012/10/24 CH'KD:	APPR:JCOMERCI 2012/10/30

QUALITY SYMBOLS: FA=0, FC=0, FP=1, ▼=1

GENERAL TOLERANCES (UNLESS SPECIFIED)	mm	INCH
4 PLACES	± ---	± ---
3 PLACES	± ---	± ---
2 PLACES	± ---	± ---
1 PLACE	± ---	± ---
ANGULAR ±1/2°		

DRAFT WHERE APPLICABLE MUST REMAIN WITHIN DIMENSIONS

DIMENSION STYLE: MM ONLY	SCALE: 3:1	DESIGN UNITS: METRIC	THIRD ANGLE PROJECTION
DRAWN BY: TGREGORI	DATE: 2010/03/24	TITLE: ASSEMBLY EDGELINE COEDGE CONNECTOR, 100 OHM	
CHECKED BY:	DATE:		
APPROVED BY: JCOMERCI	DATE: 2010/04/12	molex MOLEX INCORPORATED	
MATERIAL NO.: SEE SHEET 7	DOCUMENT NO.: SD-46720-0000		SHEET NO.: 3 OF 7
SIZE: B	THIS DRAWING CONTAINS INFORMATION THAT IS PROPRIETARY TO MOLEX INCORPORATED AND SHOULD NOT BE USED WITHOUT WRITTEN PERMISSION		

tb_frame_B_P_AM_T
Rev. F 2009/06/18

152 CKT

ALL DIMENSIONS ARE THE SAME AS 64 CKT (SHEET 2) UNLESS OTHERWISE SPECIFIED

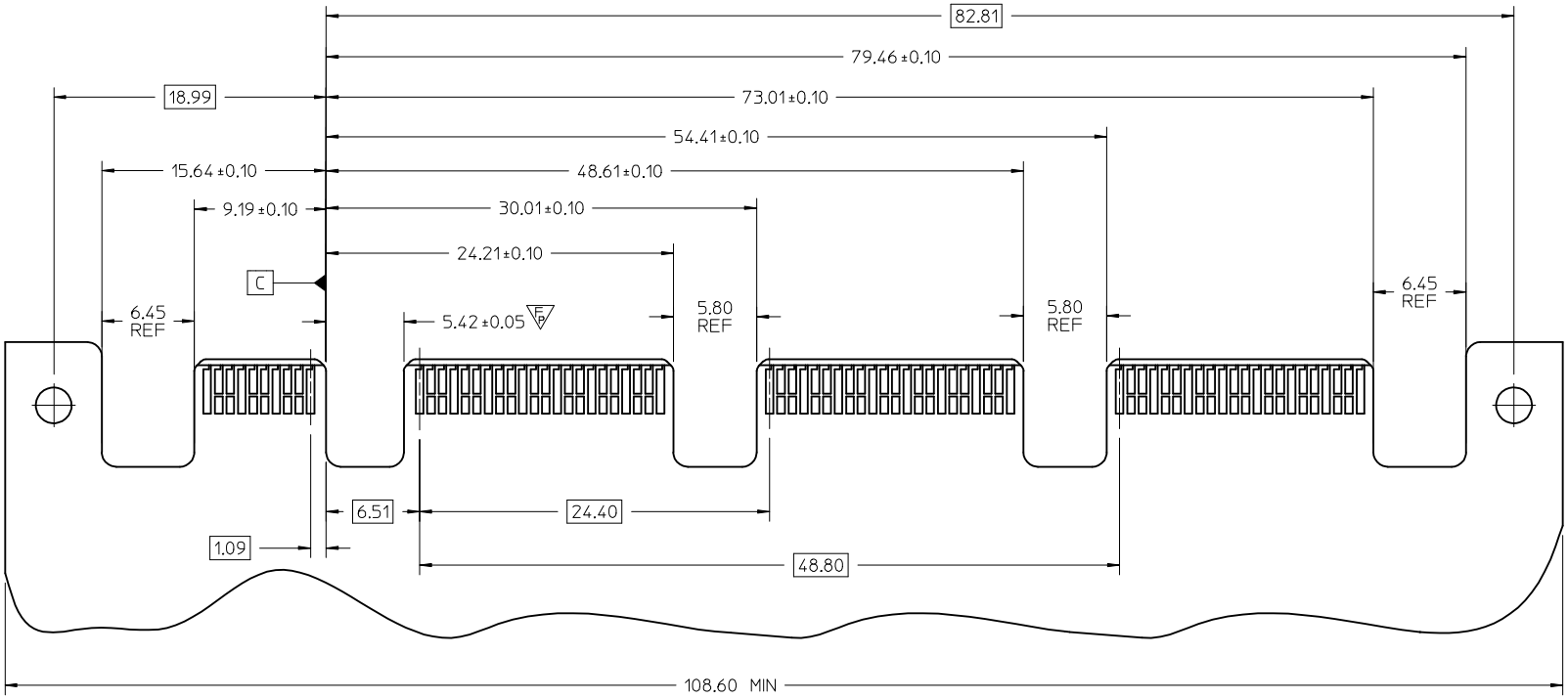

BOARD COMPONENT KEEP OUT ZONE

NOTE:
CONTACT MOLEX FOR CUSTOMER APPLICATIONS WITH MULTIPLE CONNECTORS PER BOARD

SEE SHEET 1	EC NO: UCP2013-1394	DRWN: TGREGORI 2012/10/24	CHKD: APPR: JCOMERCI 2012/10/30
D		DESCRIPTION	REV

QUALITY SYMBOLS: FA=0, FC=0, FP=1, ▼=1

GENERAL TOLERANCES (UNLESS SPECIFIED)

	mm	INCH
4 PLACES	± ---	± ---
3 PLACES	± ---	± ---
2 PLACES	± ---	± ---
1 PLACE	± ---	± ---
ANGULAR ±1/2°		

DRAFT WHERE APPLICABLE MUST REMAIN WITHIN DIMENSIONS

DIMENSION STYLE: MM ONLY
SCALE: 3:1
DESIGN UNITS: METRIC
THIRD ANGLE PROJECTION

DRAWN BY: TGREGORI DATE: 2010/03/24
CHECKED BY: DATE:
APPROVED BY: JCOMERCI DATE: 2010/04/12
MATERIAL NO.: SEE SHEET 7

TITLE: ASSEMBLY EDGELINE COEDGE CONNECTOR, 100 OHM

molex MOLEX INCORPORATED

DOCUMENT NO.: SD-46720-0000
SHEET NO.: 4 OF 7
SIZE: B

THIS DRAWING CONTAINS INFORMATION THAT IS PROPRIETARY TO MOLEX INCORPORATED AND SHOULD NOT BE USED WITHOUT WRITTEN PERMISSION

196 CKT

ALL DIMENSIONS ARE THE SAME AS 64 CKT (SHEET 2) UNLESS OTHERWISE SPECIFIED

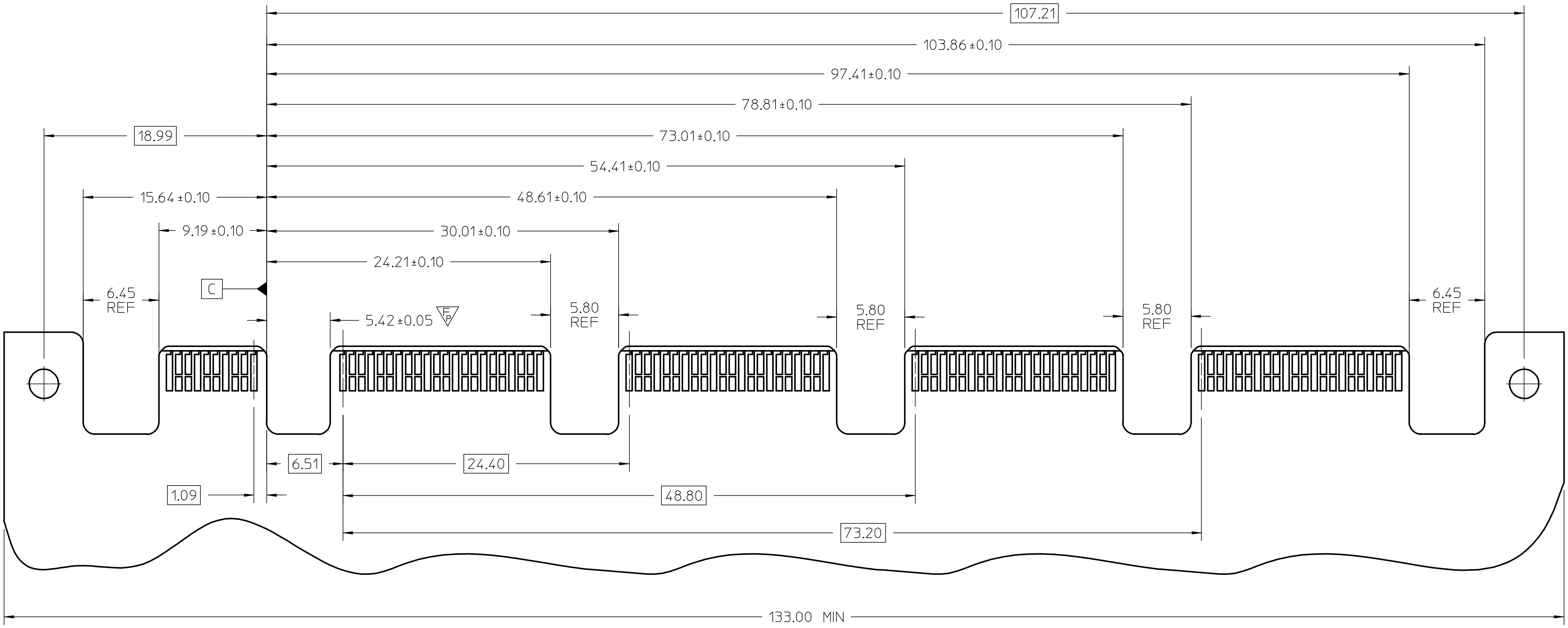

NOTE:
CONTACT MOLEX FOR CUSTOMER APPLICATIONS WITH MULTIPLE CONNECTORS PER BOARD

REV	DESCRIPTION
D	SEE SHEET 1 EC NO: UCP2013-1394 DRWN:TGREGORI 2012/10/24 CH'KD: APPR:JCOMERCI 2012/10/30

QUALITY SYMBOLS: FA=0, FC=0, FP=1, ▼=1

GENERAL TOLERANCES (UNLESS SPECIFIED)	mm	INCH
4 PLACES	± ---	± ---
3 PLACES	± ---	± ---
2 PLACES	± ---	± ---
1 PLACE	± ---	± ---
ANGULAR ±1/2°		

DRAFT WHERE APPLICABLE MUST REMAIN WITHIN DIMENSIONS

DIMENSION STYLE	MM ONLY
SCALE	3:1
DESIGN UNITS	METRIC
	THIRD ANGLE PROJECTION
DRAWN BY	TGREGORI
DATE	2010/03/24
CHECKED BY	
DATE	
APPROVED BY	JCOMERCI
DATE	2010/04/12
TITLE	ASSEMBLY EDGELINE COEDGE CONNECTOR, 100 OHM
	MOLEX INCORPORATED
MATERIAL NO.	SEE SHEET 7
DOCUMENT NO.	SD-46720-0000
SHEET NO.	5 OF 7
SIZE	B

THIS DRAWING CONTAINS INFORMATION THAT IS PROPRIETARY TO MOLEX INCORPORATED AND SHOULD NOT BE USED WITHOUT WRITTEN PERMISSION

200 CKT

ALL DIMENSIONS ARE THE SAME AS 64 CKT (SHEET 2) UNLESS OTHERWISE SPECIFIED

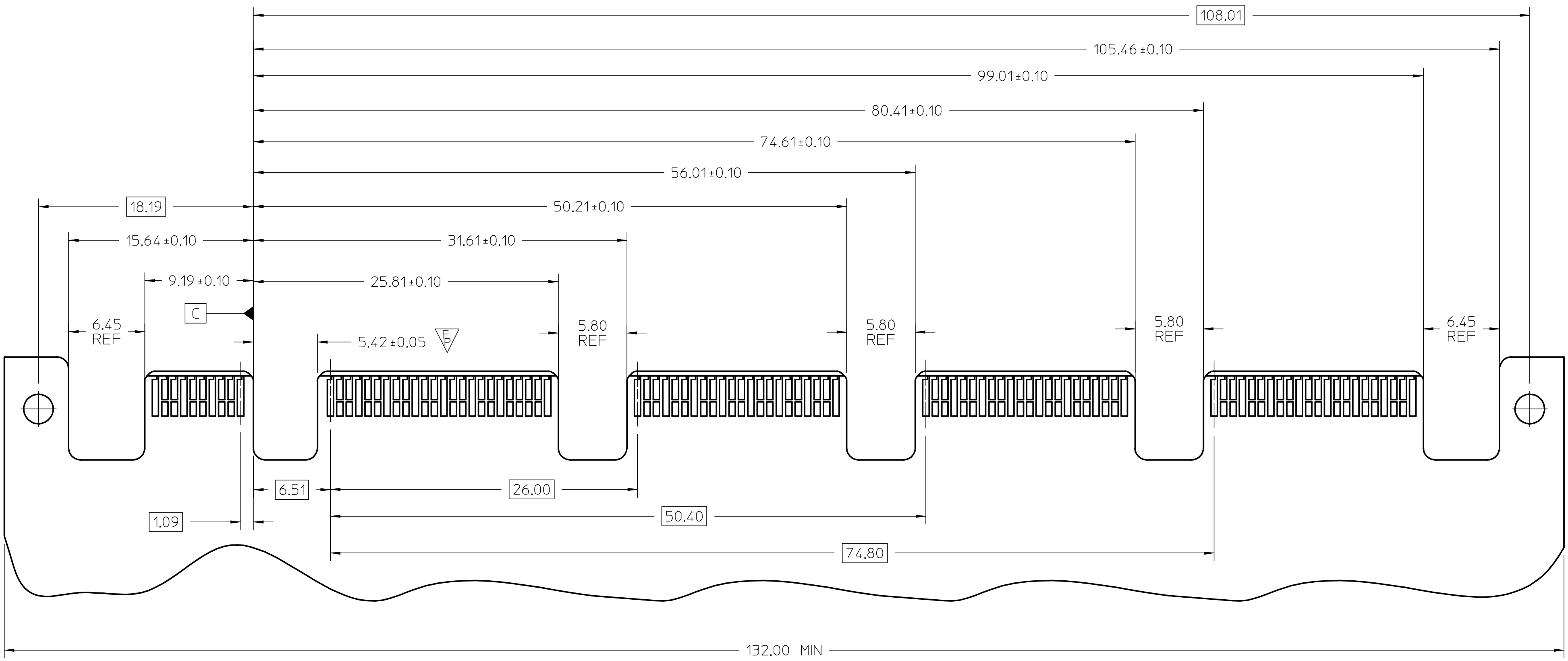

BOARD COMPONENT KEEP OUT ZONE

NOTE:
CONTACT MOLEX FOR CUSTOMER APPLICATIONS
WITH MULTIPLE CONNECTORS PER BOARD

REV	DESCRIPTION
D	SEE SHEET 1 EC NO: UCP2013-1394 DRWN:TGREGORI 2012/10/24 CH'KD: APPR:JCOMERCI 2012/10/30

QUALITY SYMBOLS: =0, =0, =1, =1

GENERAL TOLERANCES (UNLESS SPECIFIED)	mm	INCH
4 PLACES	± ---	± ---
3 PLACES	± ---	± ---
2 PLACES	± ---	± ---
1 PLACE	± ---	± ---
0 PLACE	±	±
ANGULAR ±1/2°		

DRAFT WHERE APPLICABLE MUST REMAIN WITHIN DIMENSIONS

DIMENSION STYLE	SCALE	DESIGN UNITS	
MM ONLY	3:1	METRIC	THIRD ANGLE PROJECTION

DRAWN BY	DATE
TGREGORI	2010/03/24
CHECKED BY	DATE
APPROVED BY	DATE
JCOMERCI	2010/04/12

TITLE: ASSEMBLY EDGELINE COEDGE CONNECTOR, 100 OHM

molex

MATERIAL NO. SEE SHEET 7

DOCUMENT NO. SD-46720-0000

SHEET NO. 6 OF 7

SIZE B

THIS DRAWING CONTAINS INFORMATION THAT IS PROPRIETARY TO MOLEX INCORPORATED AND SHOULD NOT BE USED WITHOUT WRITTEN PERMISSION

PART NUMBER	CIRCUIT SIZE	PCB A THK (in)	PCB B THK (in)	DIM A
46720 0001	64	.062	.062	58.8
46720 0002	64	.093	.093	58.8
46720 0003	64	.110	.110	58.8
46720 0004	64	.125	.125	58.8
46720 0005	64	.062	.093	58.8
46720 0006	64	.062	.110	58.8
46720 0007	64	.062	.125	58.8
46720 0008	64	.093	.110	58.8
46720 0009	64	.093	.125	58.8
46720 0010	64	.110	.125	58.8
46720 0011	108	.062	.062	83.2
46720 0012	108	.093	.093	83.2
46720 0013	108	.110	.110	83.2
46720 0014	108	.125	.125	83.2
46720 0015	108	.062	.093	83.2
46720 0016	108	.062	.110	83.2
46720 0017	108	.062	.125	83.2
46720 0018	108	.093	.110	83.2
46720 0019	108	.093	.125	83.2
46720 0020	108	.110	.125	83.2
46720 0021	152	.062	.062	107.6
46720 0022	152	.093	.093	107.6
46720 0023	152	.110	.110	107.6
46720 0024	152	.125	.125	107.6
46720 0025	152	.062	.093	107.6
46720 0026	152	.062	.110	107.6
46720 0027	152	.062	.125	107.6
46720 0028	152	.093	.110	107.6
46720 0029	152	.093	.125	107.6
46720 0030	152	.110	.125	107.6
46720 0031	196	.062	.062	132
46720 0032	196	.093	.093	132
46720 0033	196	.110	.110	132
46720 0034	196	.125	.125	132
46720 0035	196	.062	.093	132
46720 0036	196	.062	.110	132
46720 0037	196	.062	.125	132
46720 0038	196	.093	.110	132
46720 0039	196	.093	.125	132
46720 0040	196	.110	.125	132
46720 0041	200	.125	.125	132

BOARD THICKNESS (IN)

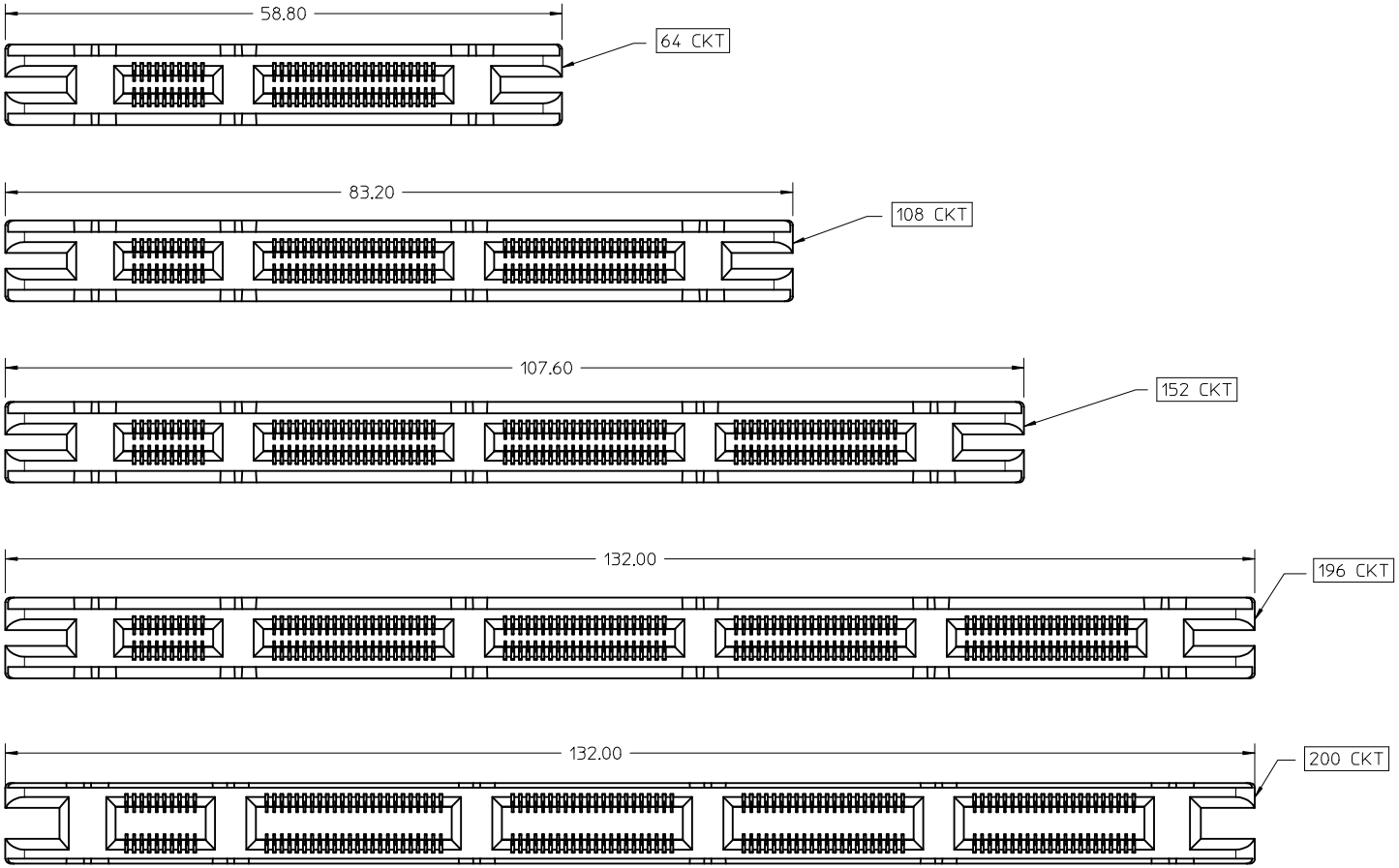

SEE SHEET 1
EC NO: UCP2013-1394
DRWN: TGREGORI 2012/10/24
CH'KD:
APPR: JCOMERCI 2012/10/30
DESCRIPTION
REV
D

QUALITY SYMBOLS
F_A=0
F_C=0
F_P=0

GENERAL TOLERANCES (UNLESS SPECIFIED)

	mm	INCH
4 PLACES	± ---	± ---
3 PLACES	± ---	± ---
2 PLACES	± ---	± ---
1 PLACE	± ---	± ---
ANGULAR ±1/2°		

DRAFT WHERE APPLICABLE MUST REMAIN WITHIN DIMENSIONS

DIMENSION STYLE: MM ONLY
SCALE: 2:1
DESIGN UNITS: METRIC
THIRD ANGLE PROJECTION

DRAWN BY: TGREGORI DATE: 2010/03/24
CHECKED BY: DATE:
APPROVED BY: JCOMERCI DATE: 2010/04/12
MATERIAL NO.: SEE TABLE
SIZE: B

TITLE: ASSEMBLY EDGELINE COEDGE CONNECTOR, 100 OHM

MOLEX INCORPORATED

DOCUMENT NO.: SD-46720-0000
SHEET NO.: 7 OF 7

THIS DRAWING CONTAINS INFORMATION THAT IS PROPRIETARY TO MOLEX INCORPORATED AND SHOULD NOT BE USED WITHOUT WRITTEN PERMISSION

PCB 1 LAYOUT (PRIMARY)

SEE DRAWING SD-46720-0000 FOR ALL PAD DETAILS NOT SHOWN

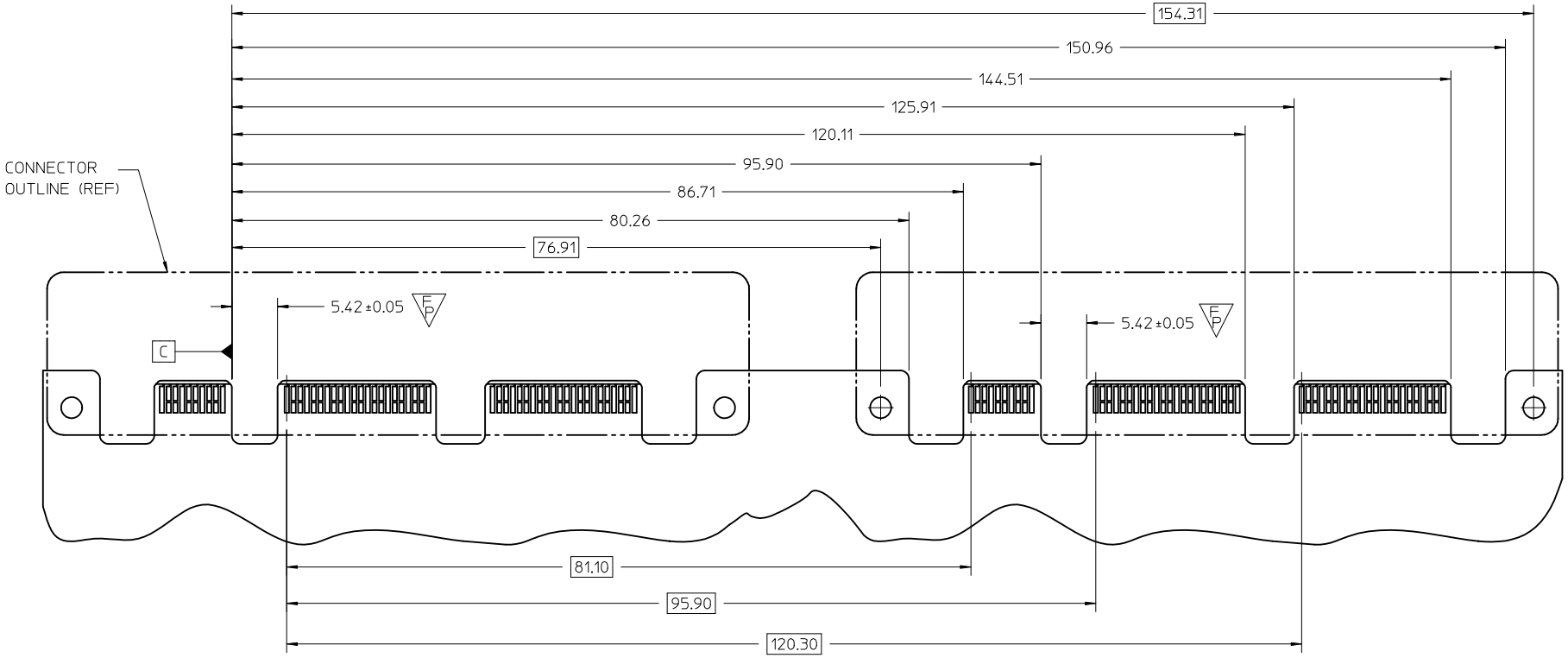

NOTE:

FP 1. ALL CONNECTORS MUST BE MATED TO PCB 1 BEFORE TO PCB 2.

REV	DESCRIPTION	
1	INITIAL RELEASE	
	EC NO: UCP2012-0081	
	DRWN: TGREGORI	2011/07/08
	CH'KD:	
	APPR: JCOMERCI	2011/07/25

QUALITY SYMBOLS

FA=0

FC=0

FP=3

GENERAL TOLERANCES (UNLESS SPECIFIED)

	mm	INCH
4 PLACES	± ---	± ---
3 PLACES	± ---	± ---
2 PLACES	± 0.10	± ---
1 PLACE	± ---	± ---
ANGULAR ±1/2°		

DRAFT WHERE APPLICABLE MUST REMAIN WITHIN DIMENSIONS

DIMENSION STYLE: MM ONLY

SCALE: 2:1

DESIGN UNITS: METRIC

THIRD ANGLE PROJECTION

DRAWN BY: TGREGORI DATE: 2011/07/08

CHECKED BY DATE

APPROVED BY: JCOMERCI DATE: 2011/07/25

MATERIAL NO. 46720

SIZE B

TITLE: EDGELINE, 12.5 GPBS COEDGE CONN. 108 CKT MULTI CONN PCB LAYOUT

molex MOLEX INCORPORATED

DOCUMENT NO. SD-46720-0108

SHEET NO. 1 OF 2

THIS DRAWING CONTAINS INFORMATION THAT IS PROPRIETARY TO MOLEX INCORPORATED AND SHOULD NOT BE USED WITHOUT WRITTEN PERMISSION

PCB 2 LAYOUT (SECONDARY)

SEE DRAWING SD-46720-0000 FOR ALL PAD DETAILS NOT SHOWN

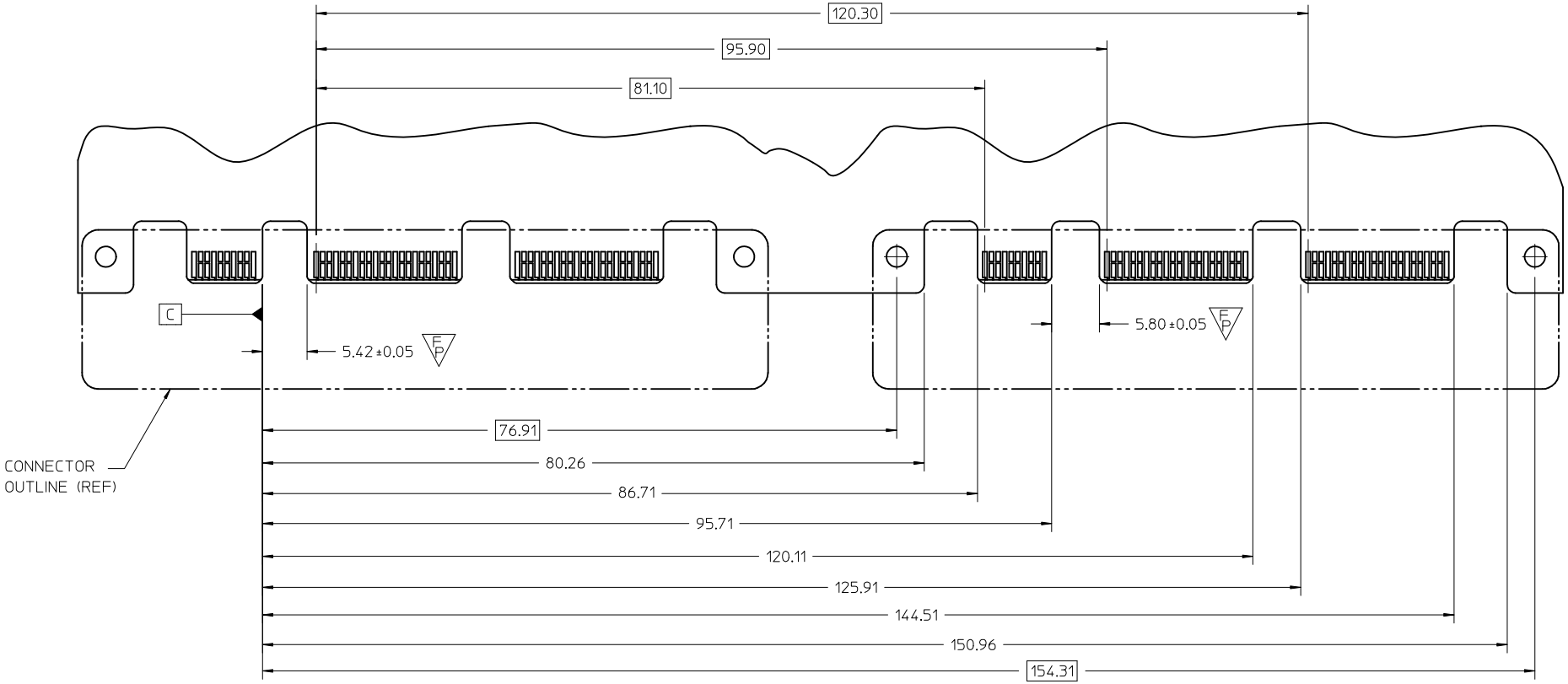

NOTE:

1. ALL CONNECTORS MUST BE MATED TO PCB 1 BEFORE TO PCB 2.

SEE SHEET 1	EC NO: UCP2012-0081	DRWN: TGREGORI 2011/07/08	CH'KD: APPR: JCOMERCI 2011/07/25
REV 1	DESCRIPTION		

QUALITY SYMBOLS: EA=0, EC=0, EP=3

GENERAL TOLERANCES (UNLESS SPECIFIED)

	mm	INCH
4 PLACES	± ---	± ---
3 PLACES	± ---	± ---
2 PLACES	± 0.10	± ---
1 PLACE	± ---	± ---
ANGULAR ±1/2°		

DRAFT WHERE APPLICABLE MUST REMAIN WITHIN DIMENSIONS

DIMENSION STYLE: MM ONLY

SCALE: 2:1

DESIGN UNITS: METRIC

THIRD ANGLE PROJECTION

DRAWN BY: TGREGORI DATE: 2011/07/08

CHECKED BY: DATE:

APPROVED BY: JCOMERCI DATE: 2011/07/25

TITLE: EDGELINE, 12.5 GPBS COEDGE CONN. 108 CKT MULTI CONN PCB LAYOUT

molex MOLEX INCORPORATED

MATERIAL NO.: 46720

DOCUMENT NO.: SD-46720-0108

SHEET NO.: 2 OF 2

SIZE: B

THIS DRAWING CONTAINS INFORMATION THAT IS PROPRIETARY TO MOLEX INCORPORATED AND SHOULD NOT BE USED WITHOUT WRITTEN PERMISSION

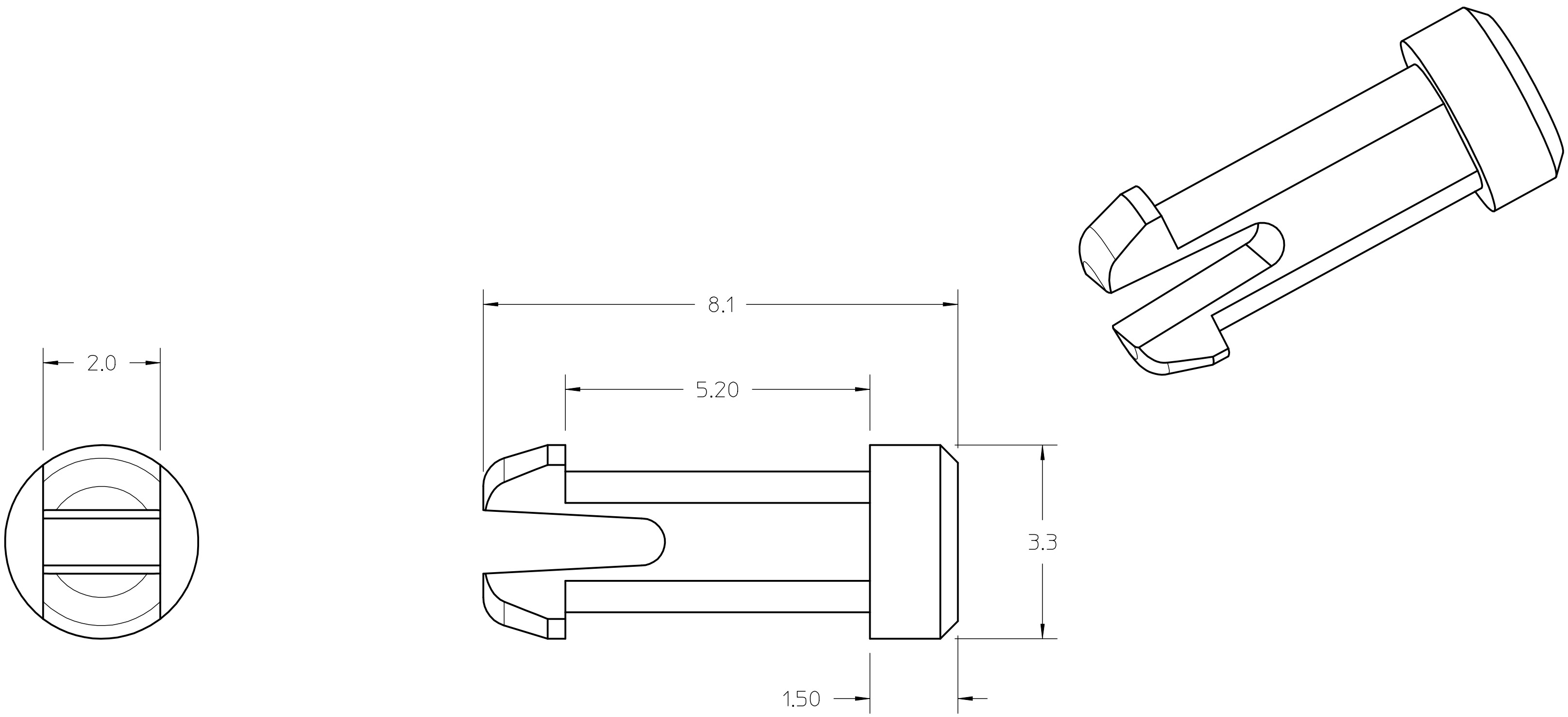

NOTES:

1. MATERIAL: NYLON 6/6, UL94 V-0 (RMS-19)
   COLOR: NATURAL
2. FOR USE WITH MOLEX EDGELINE COEDGE SERIES 46720.
3. RIVETS RECEIVED FROM MOLEX IN INDIVIDUAL PLASTIC BAGS WITH QUANTITY 1000 PCS
4. TO REMOVE RIVET FROM ASSEMBLY USE MOLEX REMOVAL TOOL NUMBER 638133502

REV	DESCRIPTION
B	REMOVED P/N 7711 EC NO: UCP2012-0083 2011/07/14 DRWN:TGREGORI 2011/09/13 CH'KD: APPR:JCOMERCI

QUALITY SYMBOLS	GENERAL TOLERANCES (UNLESS SPECIFIED)	mm	INCH
FA =0	4 PLACES	±---	±---
FC =0	3 PLACES	±---	±---
FP =0	2 PLACES	±0.13	±---
	1 PLACE	±0.25	±---
	ANGULAR ±1/2°		

DRAFT WHERE APPLICABLE MUST REMAIN WITHIN DIMENSIONS

DIMENSION STYLE: MM ONLY	SCALE: 8:1	DESIGN UNITS: METRIC	THIRD ANGLE PROJECTION
DRAWN BY: TGREGORI	DATE: 2010/03/24	TITLE: SNAP LOCK PIN EDGELINE COEDGE CONNECTOR	
CHECKED BY:	DATE:		
APPROVED BY: JCOMERCI	DATE: 2010/04/12	molex MOLEX INCORPORATED	
MATERIAL NO.: 46720-7710	DOCUMENT NO.: SD-46720-7710		SHEET NO.: 1 OF 1
SIZE: A			

THIS DRAWING CONTAINS INFORMATION THAT IS PROPRIETARY TO MOLEX INCORPORATED AND SHOULD NOT BE USED WITHOUT WRITTEN PERMISSION

ООО «ЛайфЭлектроникс» “LifeElectronics” LLC

ИНН 7805602321 КПП 780501001 Р/С 40702810122510004610 ФАКБ "АБСОЛЮТ БАНК" (ЗАО) в г.Санкт-Петербурге К/С 30101810900000000703 БИК 044030703

Компания «Life Electronics» занимается поставками электронных компонентов импортного и отечественного производства от производителей и со складов крупных дистрибьюторов Европы, Америки и Азии.

С конца 2013 года компания активно расширяет линейку поставок компонентов по направлению коаксиальный кабель, кварцевые генераторы и конденсаторы (керамические, пленочные, электролитические), за счёт заключения дистрибьюторских договоров

Мы предлагаем:

- *Конкурентоспособные цены и скидки постоянным клиентам.*
- *Специальные условия для постоянных клиентов.*
- *Подбор аналогов.*
- *Поставку компонентов в любых объемах, удовлетворяющих вашим потребностям.*

- *Приемлемые сроки поставки, возможна ускоренная поставка.*
- *Доставку товара в любую точку России и стран СНГ.*
- *Комплексную поставку.*
- *Работу по проектам и поставку образцов.*
- *Формирование склада под заказчика.*

- *Сертификаты соответствия на поставляемую продукцию (по желанию клиента).*
- *Тестирование поставляемой продукции.*
- *Поставку компонентов, требующих военную и космическую приемку.*
- *Входной контроль качества.*
- *Наличие сертификата ISO.*

В составе нашей компании организован Конструкторский отдел, призванный помогать разработчикам, и инженерам.

Конструкторский отдел помогает осуществить:

- *Регистрацию проекта у производителя компонентов.*
- *Техническую поддержку проекта.*
- *Защиту от снятия компонента с производства.*
- *Оценку стоимости проекта по компонентам.*
- *Изготовление тестовой платы монтаж и пусконаладочные работы.*

Тел: +7 (812) 336 43 04 (многоканальный)
Email: org@lifeelectronics.ru

www.lifeelectronics.ru