Description

The ICS7152-01, -02, -11, and -12 are clock generators for EMI (Electro Magnetic Interference) reduction (see below for frequency ranges and multiplier ratios). Spectral peaks can be attenuated by slightly modulating the oscillation frequency. Both down and center spread profiles are selectable. Center spread maintains an average frequency equal to an unspread clock. Down spread meets maximum frequency specs over the entire modualtion cycle.

Features

- Operating voltage of 3.3 V ±0.3 V
- Packaged in 8-pin SOIC
- Input frequency range of 16.6 to 134.0 MHz
- Output frequency range of 16.6 to 134.0 MHz
- Provides a spread spectrum clock output (±0.5%, ±1.5% center spread; -1.0%, -3.0% down spread)
- Advanced, low-power CMOS process
- Industrial temperature range available
- Available in Pb (lead) free package

Block Diagram

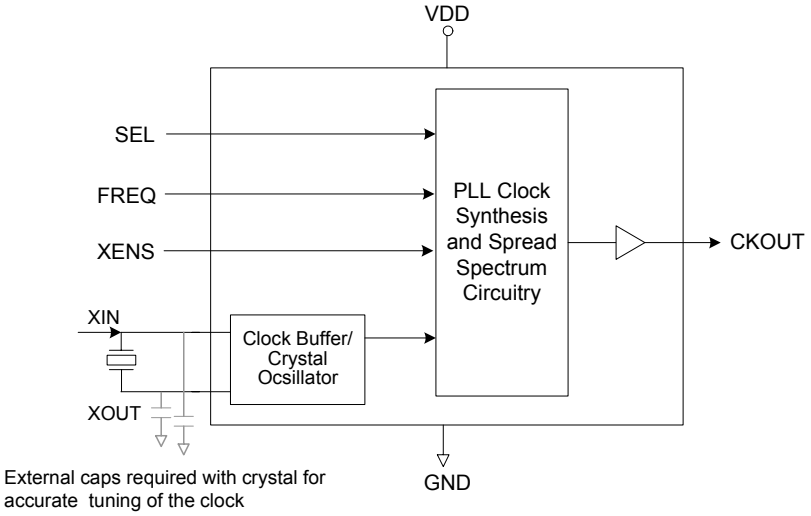

Product Lineup

Product	Input Frequency Range	Modulation Type	Modulation Enable Pin
ICS7152M-01, ICS7152MI-01	16.6 MHz to 67 MHz	Down spread	Yes
ICS7152M-02, ICS7152MI-02	40.0 MHz to 134.0 MHz		
ICS7152M-11, ICS7152MI-11	16.6 MHz to 67.0 MHz	Center spread	
ICS7152M-12, ICS7152MI-12	40.0 MHz to 134.0 MHz		

Integrated Circuit Systems, Inc. • 525 Race Street, San Jose, CA 95126 • tel (408) 297-1201 • www.icst.com

Pin Assignment

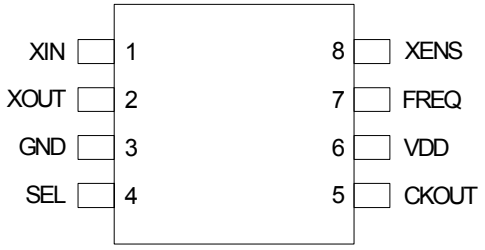

8 pin (150 mil) SOIC

Modulation Enable Setting Table

XENS Pin 8	Spread Spectrum
0	ON
1	OFF

SEL Modulation Rate Setting Table

SEL Pin 4 (note1)	Spread Direction	Spread Percentage (%)	Part Number
0	Center	±0.5	ICS7152M-11, ICS7152M-12
	Down	-1.0	ICS7152M-01, ICS7152M-02
1	Center	±1.5	ICS7152M-11, ICS7152M-12
	Down	-3.0	ICS7152M-01, ICS7152M-02

Frequency Setting Table

FREQ Pin 7	Frequency	
0	16.6 to 40 MHz	ICS7152M-01, ICS7152M-11
	40 to 80 MHz	ICS7152M-02, ICS7152M-12
1	33 to 67 MHz	ICS7152M-01, ICS7152M-11
	66 to 134 MHz	ICS7152M-02, ICS7152M-12

Pin Descriptions

Pin Number	Pin Name	Pin Type	Pin Description
1	XIN	Input	Crystal resonator connection pin/clock input pin.
2	XOUT	Output	Crystal resonator connection pin.
3	GND	Power	Connect to ground.
4	SEL	Input	Modulation rate setting pin.
5	CKOUT	Output	Modulated clock output pin.
6	VDD	Power	Connect to +3.3 V.
7	FREQ	Input	Frequency setting pin.
8	XENS	Output	Modulation enable setting pin.

Integrated Circuit Systems, Inc. • 525 Race Street, San Jose, CA 95126 • tel (408) 297-1201 • www.icst.com

External Components

The ICS7152 requires a minimum number of external components for proper operation.

Decoupling Capacitor

A decoupling capacitor of 0.01µF must be connected between GND and VDD on pin 6, as close to this pin as possible. For optimum device performance, the decoupling capacitor should be mounted on the component side of the PCB. Avoid the use of vias in the decoupling circuit.

Series Termination Resistor

Series termination should be used on the clock output. To series terminate a 50Ω trace (a commonly used trace impedance) place a 27Ω resistor in series with the clock line, as close to the clock output pin as possible. The nominal impedance of the clock output is 25Ω.

PCB Layout Recommendations

For optimum device performance and lowest output phase noise, the following guidelines should be observed.

1) An optimum layout is one with all components on the same side of the board, minimizing vias through other signal layers. Other signal traces should be routed away from the ICS7152. This includes signal traces just underneath the device, or on layers adjacent to the ground plane layer used by the device.

Crystal Information

The crystal used should be a fundamental mode, parallel resonant. Crystal capacitors should be connected from pins X1 to ground and X2 to ground to optimize the initial accuracy. The value of these capacitors is given by the following equation:

$$\text{Crystal caps (pF)} = (C_L - 6) \times 2$$

In the equation, C_L is the crystal load capacitance. So, for a crystal with a 16 pF load capacitance, two 20 pF [(16-6) x 2] capacitors should be used.

Spread Spectrum Profile

The ICS7152 low EMI clock generator uses a triangular frequency modulation profile for optimal down stream tracking of zero delay buffers and other PLL devices. The frequency modulation amplitude is constant with variations of the input frequency.

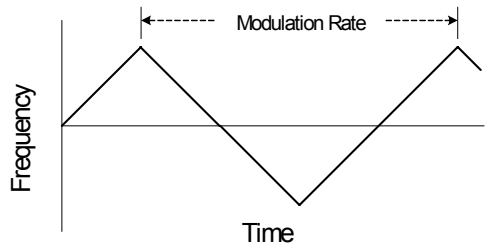

Integrated Circuit Systems, Inc. • 525 Race Street, San Jose, CA 95126 • tel (408) 297-1201 • www.icst.com

Absolute Maximum Ratings

Stresses above the ratings listed below can cause permanent damage to the ICS7152. These ratings, which are standard values for ICS commercially rated parts, are stress ratings only. Functional operation of the device at these or any other conditions above those indicated in the operational sections of the specifications is not implied. Exposure to absolute maximum rating conditions for extended periods can affect product reliability. Electrical parameters are guaranteed only over the recommended operating temperature range.

Item	Rating
Supply Voltage, VDD	7 V
All Inputs and Outputs (referenced to GND)	-0.5 V to VDD+0.5 V
Ambient Operating Temperature	-40 to +85°C
Storage Temperature	-55 to +125°C
Junction Temperature	-40 to +125°C
Soldering Temperature	260°C
Overshoot (V_{IOVER})	VDD + 1.0 V ($t_{OVER} \leq$ 50 ns) max
Undershoot (V_{IUNDER})	GND - 1.0 V ($t_{UNDER} \leq$ 50 ns) min

Overshoot/Undershoot

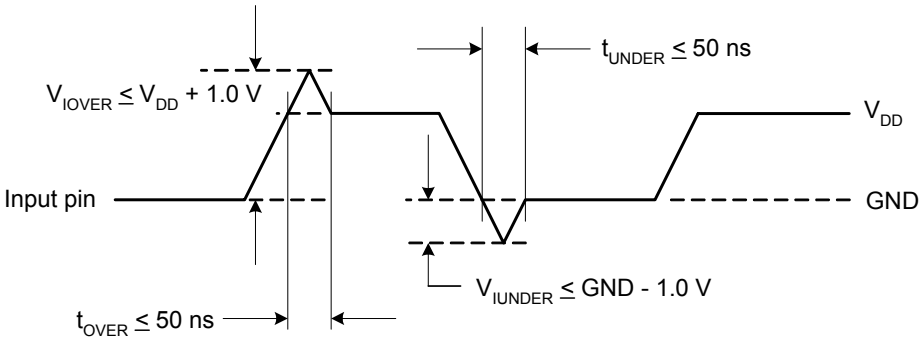

Recommended Operation Conditions

Parameter	Min.	Typ.	Max.	Units
Ambient Operating Temperature	-40		+85	°C
Power Supply Voltage (measured in respect to GND)	+3.0	3.3	3.6	V

Integrated Circuit Systems, Inc. • 525 Race Street, San Jose, CA 95126 • tel (408) 297-1201 • www.icst.com

DC Electrical Characteristics

Unless stated otherwise, **VDD = 3.3 V ±0.3 V**, Ambient Temperature -40 to +85°C

Parameter	Symbol	Conditions	Min.	Typ.	Max.	Units
Operating Voltage	VDD		3.0	3.3	3.6	V
Supply Current	IDD	No load, at 3.3 V		14	28	mA
Input High Voltage	V_{IH}	SEL, FREQ, XENS	VDD x 0.8		VDD + 0.3	V
		XIN, Input slew rate 3 V/ns, 16.6 to 100 MHz	VDD x 0.8		VDD + 0.3	V
		XIN, Input slew rate 3 V/ns, 100 to 134 MHz	VDD x 0.9		VDD + 0.3	V
Input Low Voltage	V_{IL}	SEL, FREQ, XENS	GND		VDD x 0.20	V
		XIN, Input slew rate 3 V/ns, 16.6 to 100 MHz	GND		VDD x 0.20	V
		XIN, Input slew rate 3 V/ns, 100 to 134 MHz	GND		VDD x 0.10	V
Output High Voltage	V_{OH}	CKOUT, I_{OH} = -4 mA	VDD - 0.5		VDD	V
Output Low Voltage	V_{OL}	CKOUT, I_{OL} = 4 mA	GND		0.4	V
Input Capacitance	C_{IN}	XIN, SEL, XENS			16	pF
Load Capacitance	C_L	CKOUT, 16.6 to 67 MHz			15	pF
		CKOUT, 67 to 100 MHz			10	pF
		CKOUT, 100 to 134 MHz			7	pF
Output Impedance	Z_O	CKOUT, 16.6 to 134 MHz		25		Ω

Integrated Circuit Systems, Inc. ● 525 Race Street, San Jose, CA 95126 ● tel (408) 297-1201 ● www.icst.com

AC Electrical Characteristics

Unless stated otherwise, **VDD = 3.3 V ±0.3 V**, Ambient Temperature -40 to +85° C

Parameter	Symbol	Conditions	Min.	Typ.	Max.	Units
Input Crystal Frequency			16.6		40	MHz
Input Clock Frequency	f_{IN}	ICS7152-01, -11	16.6		67	MHz
		ICS7152-02, -12	40		134	MHz
Output Frequency	f_{OUT}	CKOUT, ICS7152-01, -11	16.6		67	MHz
		CKOUT, ICS7152-02, -12	40		134	MHz
Input Clock Duty Cycle	t_{DCI}	XIN, 16.6 to 100 MHz	40	50	60	%
		XIN, 100 to 134 MHz	45	50	55	%
Output Clock Duty Cycle	t_{DCC}	CKOUT, 1.5 V	40		60	%
Output Slew Rate		CKOUT, 0.4 to 2.4 V, CL = 15 pF	0.5		3.0	V/ns
Cycle to Cycle Jitter	t_{JC}	No load, spread off, ICS7151-01, -02			150	ps
		No load, spread off, ICS7151-11, -12			250	ps
Power-up Time		PLL lock-time from power-up to 1% of final value		2	5	ms
Modulation Frequency	f_{MOD}	CKOUT		33		kHz

Integrated Circuit Systems, Inc. ● 525 Race Street, San Jose, CA 95126 ● tel (408) 297-1201 ● www.icst.com

Input Frequency ($f_{IN} = 1/t_{IN}$)

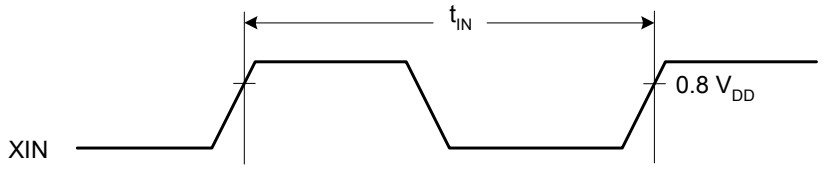

Output Slew Rate

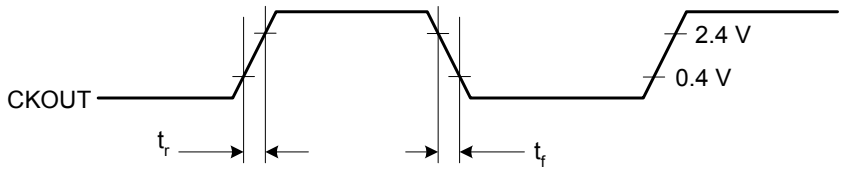

SR = (2.4 - 0.4) /t_r, SR = (2.4 - 0.4) /t_f

Thermal Characteristics 8 SOIC

Parameter	Symbol	Conditions	Min.	Typ.	Max.	Units
Thermal Resistance Junction to Ambient	θ_{JA}	Still air		150		°C/W
	θ_{JA}	1 m/s air flow		140		°C/W
	θ_{JA}	3 m/s air flow		120		°C/W
Thermal Resistance Junction to Case	θ_{JC}			40		°C/W

Integrated Circuit Systems, Inc. ● 525 Race Street, San Jose, CA 95126 ● tel (408) 297-1201 ● www.icst.com

Package Outline and Package Dimensions (8-pin SOIC, 150 Mil. Body)

Package dimensions are kept current with JEDEC Publication No. 95

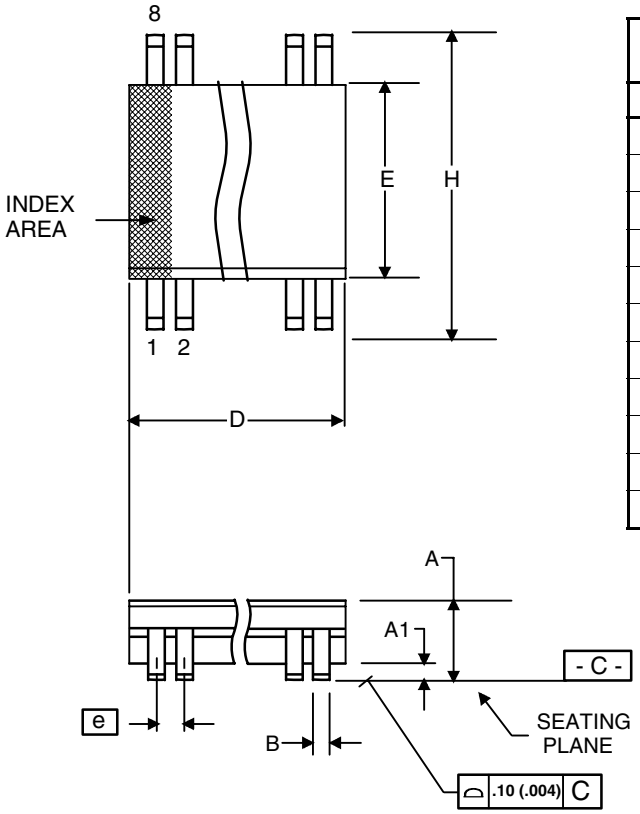

	Millimeters		Inches	
Symbol	**Min**	**Max**	**Min**	**Max**
A	1.35	1.75	.0532	.0688
A1	0.10	0.25	.0040	.0098
B	0.33	0.51	.013	.020
C	0.19	0.25	.0075	.0098
D	4.80	5.00	.1890	.1968
E	3.80	4.00	.1497	.1574
e	1.27 BASIC		0.050 BASIC	
H	5.80	6.20	.2284	.2440
h	0.25	0.50	.010	.020
L	0.40	1.27	.016	.050
α	0°	8°	0°	8°

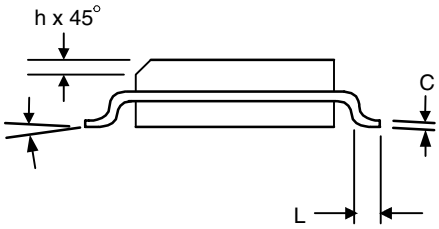

Integrated Circuit Systems, Inc. ● 525 Race Street, San Jose, CA 95126 ● tel (408) 297-1201 ● www.icst.com

Ordering Information

Part / Order Number	Marking	Shipping Packaging	Package	Temperature
ICS7152M-01	7152M-01	Tubes	8-pin SOIC	0 to +70° C
ICS7152M-01T	7152M-01	Tape and Reel	8-pin SOIC	0 to +70° C
ICS7152M-01LF	7152M01L	Tubes	8-pin SOIC	0 to +70° C
ICS7152M-01LFT	7152M01L	Tape and Reel	8-pin SOIC	0 to +70° C
ICS7152MI-01	7152MI01	Tubes	8-pin SOIC	-40 to +85° C
ICS7152MI-01T	7152MI01	Tape and Reel	8-pin SOIC	-40 to +85° C
ICS7152MI-01LF	7152I01L	Tubes	8-pin SOIC	-40 to +85° C
ICS7152MI-01LFT	7152I01L	Tape and Reel	8-pin SOIC	-40 to +85° C
ICS7152M-02	7152M-02	Tubes	8-pin SOIC	0 to +70° C
ICS7152M-02T	7152M-02	Tape and Reel	8-pin SOIC	0 to +70° C
ICS7152M-02LF	7152M02L	Tubes	8-pin SOIC	0 to +70° C
ICS7152M-02LFT	7152M02L	Tape and Reel	8-pin SOIC	0 to +70° C
ICS7152MI-02	7152MI02	Tubes	8-pin SOIC	-40 to +85° C
ICS7152MI-02T	7152MI02	Tape and Reel	8-pin SOIC	-40 to +85° C
ICS7152MI-02LF	7152I02L	Tubes	8-pin SOIC	-40 to +85° C
ICS7152MI-02LFT	7152I02L	Tape and Reel	8-pin SOIC	-40 to +85° C
ICS7152M-11	7152M-11	Tubes	8-pin SOIC	0 to +70° C
ICS7152M-11T	7152M-11	Tape and Reel	8-pin SOIC	0 to +70° C
ICS7152M-11LF	7152M11L	Tubes	8-pin SOIC	0 to +70° C
ICS7152M-11LFT	7152M11L	Tape and Reel	8-pin SOIC	0 to +70° C
ICS7152MI-11	7152MI11	Tubes	8-pin SOIC	-40 to +85° C
ICS7152MI-11T	7152MI11	Tape and Reel	8-pin SOIC	-40 to +85° C
ICS7152MI-11LF	7152I11L	Tubes	8-pin SOIC	-40 to +85° C
ICS7152MI-11LFT	7152I11L	Tape and Reel	8-pin SOIC	-40 to +85° C
ICS7152M-12	7152M-12	Tubes	8-pin SOIC	0 to +70° C
ICS7152M-12T	7152M-12	Tape and Reel	8-pin SOIC	0 to +70° C
ICS7152M-12LF	7152M12L	Tubes	8-pin SOIC	0 to +70° C
ICS7152M-12LFT	7152M12L	Tape and Reel	8-pin SOIC	0 to +70° C
ICS7152MI-12	7152MI12	Tubes	8-pin SOIC	-40 to +85° C
ICS7152MI-12T	7152MI12	Tape and Reel	8-pin SOIC	-40 to +85° C
ICS7152MI-12LF	7152I12L	Tubes	8-pin SOIC	-40 to +85° C
ICS7152MI-12LFT	7152I12L	Tape and Reel	8-pin SOIC	-40 to +85° C

Parts that are ordered with a "LF" suffix to the part number are the Pb-Free configuration and are RoHS compliant.

While the information presented herein has been checked for both accuracy and reliability, Integrated Circuit Systems (ICS) assumes no responsibility for either its use or for the infringement of any patents or other rights of third parties, which would result from its use. No other circuits, patents, or licenses are implied. This product is intended for use in normal commercial applications. Any other applications such as those requiring extended temperature range, high reliability, or other extraordinary environmental requirements are not recommended without additional processing by ICS. ICS reserves the right to change any circuitry or specifications without notice. ICS does not authorize or warrant any ICS product for use in life support devices or critical medical instruments.

Integrated Circuit Systems, Inc. • 525 Race Street, San Jose, CA 95126 • tel (408) 297-1201 • www.icst.com

ООО «ЛайфЭлектроникс» “LifeElectronics” LLC

ИНН 7805602321 КПП 780501001 Р/С 40702810122510004610 ФАКБ "АБСОЛЮТ БАНК" (ЗАО) в г.Санкт-Петербурге К/С 30101810900000000703 БИК 044030703

Компания «Life Electronics» занимается поставками электронных компонентов импортного и отечественного производства от производителей и со складов крупных дистрибьюторов Европы, Америки и Азии.

С конца 2013 года компания активно расширяет линейку поставок компонентов по направлению коаксиальный кабель, кварцевые генераторы и конденсаторы (керамические, пленочные, электролитические), за счёт заключения дистрибьюторских договоров

Мы предлагаем:

- *Конкурентоспособные цены и скидки постоянным клиентам.*
- *Специальные условия для постоянных клиентов.*
- *Подбор аналогов.*
- *Поставку компонентов в любых объемах, удовлетворяющих вашим потребностям.*

- *Приемлемые сроки поставки, возможна ускоренная поставка.*
- *Доставку товара в любую точку России и стран СНГ.*
- *Комплексную поставку.*
- *Работу по проектам и поставку образцов.*
- *Формирование склада под заказчика.*

- *Сертификаты соответствия на поставляемую продукцию (по желанию клиента).*
- *Тестирование поставляемой продукции.*
- *Поставку компонентов, требующих военную и космическую приемку.*
- *Входной контроль качества.*
- *Наличие сертификата ISO.*

В составе нашей компании организован Конструкторский отдел, призванный помогать разработчикам, и инженерам.

Конструкторский отдел помогает осуществить:

- *Регистрацию проекта у производителя компонентов.*
- *Техническую поддержку проекта.*
- *Защиту от снятия компонента с производства.*
- *Оценку стоимости проекта по компонентам.*
- *Изготовление тестовой платы монтаж и пусконаладочные работы.*

Тел: +7 (812) 336 43 04 (многоканальный)
Email: org@lifeelectronics.ru

www.lifeelectronics.ru