SP3485

3.3V Low Power Half-Duplex RS-485 Transceiver with 10Mbps Data Rate

Description

The SP3485 device is a 3.3V low power half-duplex transceiver that meets the specifications of the RS-485 and RS-422 serial protocols. This device is pin-to-pin compatible with the MaxLinear SP481, SP483 and SP485 devices as well as popular industry standards. The SP3485 can meet the electrical specifications of the RS-485 and RS-422 serial protocols up to 10Mbps under load.

FEATURES

- RS-485 and RS-422 transceiver
- Operates from a single 3.3V supply
- Interoperable with 5.0V logic
- Driver/receiver enable
- -7V to +12V common-mode input voltage range
- Allows up to 32 transceivers on the serial bus
- Compatibility with industry standard 75176 pinout
- Driver output short-circuit protection

Ordering Information - Back Page

Block Diagram

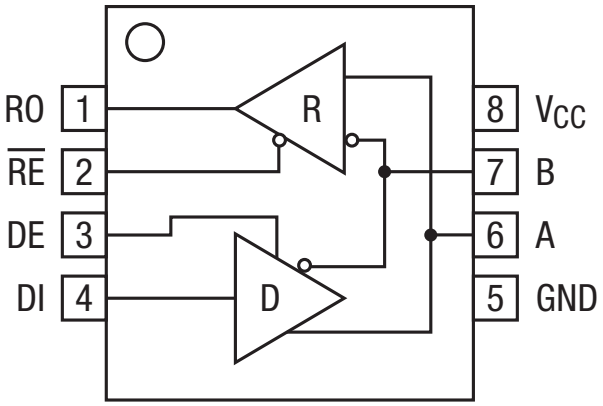

SP3485

Absolute Maximum Ratings

These are stress ratings only and functional operation of the device at these ratings or any other above those indicated in the operation sections of the specifications below is not implied. Exposure to absolute maximum rating conditions for extended periods of time may affect reliability.

V_{CC} 6.0V

Input Voltages

Logic ..... -0.3V to 6.0V

Drivers ..... -0.3V to 6.0V

Receivers..... ±15V

Output Voltages

Drivers ..... ±15V

Receivers..... -0.3V to 6.0V

Storage Temperature .....-65˚C to 150˚C

Maximum Junction Temperature, T_J .....125˚C

Power Dissipation..... 600mW

(derate 6.90mW/°C above 70°C)

Operating Conditions

Package Power Dissipation

8-pin NSOIC Θ_{JA} ..... 128.4˚C/W

ESD Rating

Human Body Model (HBM)..... ±2kV

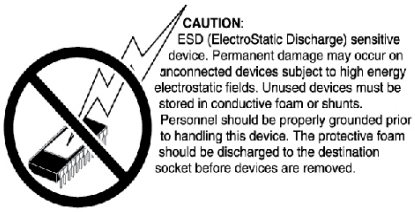

Electrical Characteristics

Unless otherwise noted: $T_{AMB} = T_{MIN}$ to T_{MAX} and V_{CC} = 3.3V ±5%.

PARAMETERS	MIN.	TYP.	MAX.	UNITS	CONDITIONS
SP3485 Driver DC Characteristics					
Differential output voltage			Vcc	Volts	Unloaded; R = ∞Ω ; Figure 1
Differential output voltage	2		Vcc	Volts	With Load; R = 50Ω (RS-422); Figure 1
Differential output voltage	1.5		Vcc	Volts	With Load; R = 27Ω (RS-485); Figure 1
Change in magnitude of driver differential output voltage for complimentary states			0.2	Volts	R = 27Ω or R = 50Ω; Figure 1
Driver common mode output voltage			3	Volts	R = 27Ω or R = 50Ω; Figure 1
Input high voltage	2.0			Volts	Applies to DE, DI, $\overline{RE}$
Input low voltage			0.8	Volts	Applies to DE, DI, $\overline{RE}$
Input current			±10	µA	Applies to DE, DI, $\overline{RE}$
Driver short circuit current V_{OUT} = HIGH			±250	mA	-7V ≤ V_O ≤ +12V; Figure 8
Driver short circuit current V_{OUT} = LOW			±250	mA	-7V ≤ V_O ≤ +12V; Figure 8
SP3485 Driver AC Characteristics					
Maximum data rate	10			Mbps	$\overline{RE}$ = V_{CC}, DE = V_{CC}
Driver input to output, t_{PLH}		17	60	ns	Figures 2 & 9
Driver input to output, t_{PHL}		17	60	ns	Figures 2 & 9
Differential driver skew		2	10	ns	$\lvert t_{DO1} - t_{DO2} \rvert$, Figures 2 and 10
Driver rise or fall time		5	20	ns	From 10%-90%; Figures 3 and 10
Driver enable to output high		35	120	ns	Figures 4 and 11
Driver enable to output low		30	120	ns	Figures 5 and 11
Driver disable time from low		20	120	ns	Figures 5 and 11
Driver disable time from high		20	120	ns	Figures 4 and 11
Driver enable from shutdown to output high, t_{PSH}			250	ns	C_L = 50pF, R_L = 500Ω. Figures 4, 5, and 11
Driver enable from shutdown to output low, t_{PSL}			250	ns	
Time to shutdown, t_{SHDN}	50	200	600	ns	Notes 1 and 2

Electrical Characteristics (Continued)

Unless otherwise noted: $T_{AMB} = T_{MIN}$ to T_{MAX} and $V_{CC} = 3.3V \pm 5\%$.

PARAMETERS	MIN.	TYP.	MAX.	UNITS	CONDITIONS
SP3485 Receiver DC Characteristics					
Differential input threshold	-0.2		0.2	Volts	$-7V \le V_{CM} \le 12V$
Input hysteresis		20		mV	$V_{CM} = 0V$
Output voltage HIGH	Vcc-0.4			Volts	$V_{ID} = 200mV$, -1.5mA
Output voltage LOW			0.4	Volts	$V_{ID} = -200mV$, 2.5mA
Three-state (high impedance) output current			±1	µA	$0V \le V_O \le V_{CC}$; $\overline{RE} = V_{CC}$
Input resistance	12			kΩ	$-7V \le V_{CM} \le 12V$
Input current (A, B); $V_{IN} = 12V$			1.0	mA	DE = 0V, V_{CC} = 0V or 3.6V, $V_{IN} = 12V$
Input current (A, B); $V_{IN} = -7V$			-0.8	mA	DE = 0V, V_{CC} = 0V or 3.6V, $V_{IN} = -7V$
Short circuit current	7		60	mA	$0V \le V_{CM} \le V_{CC}$
SP3485 Receiver AC Characteristics					
Maximum data rate	10			Mbps	$\overline{RE}$ = 0V, DE = 0V
Receiver input to output, t_{PLH}		40	100	ns	Figures 6 and 12
Receiver input to output, t_{PLH}			70	ns	T_{AMB} = 25°C, Vcc = 3.3V, Figures 6 and 12
Receiver input to output, t_{PHL}		35	100	ns	Figures 6 and 12
Receiver input to output, t_{PHL}			70	ns	T_{AMB} = 25°C, Vcc = 3.3V, Figures 6 and 12
Differential receiver skew		4		ns	$t_{RSKEW} = \lvert t_{RPHL} - t_{RPLH} \rvert$, Figures 6 and 12
Receiver enable to output low		10	60	ns	Figures 7 and 13, S_1 closed, S_2 open
Receiver enable to output high		10	60	ns	Figures 7 and 13, S_2 closed, S_1 open
Receiver disable from low		10	60	ns	Figures 7 and 13, S_1 closed, S_2 open
Receiver disable from high		10	60	ns	Figures 7 and 13, S_2 closed, S_1 open
Receiver enable from shutdown to output high, t_{PRSH}			1800	ns	C_L = 15pF, R_L = 1kΩ. Figures 7 and 13
Receiver enable from shutdown to output low, t_{PRSL}			1800	ns	
Time to shutdown, t_{SHDN}	50	200	600	ns	Notes 1 and 2
Power Requirements					
Supply current , no load		425	2000	µA	$\overline{RE}$, DI = 0V or V_{CC} ; DE = V_{CC}
Supply current , no load		300	1500	µA	$\overline{RE}$ = 0V, DI = 0V or V_{CC}, DE = 0V

NOTES:

1. The transceivers are put into shutdown by gringing $\overline{RE}$ high and DE low simultaneously for at least 600ns. If the control inputs are in this state for less than 50ns, the device is guaranteed to not enter shutdown. If the enable inputs are held in this state for at least 600ns, the device is assured to be in shutdown. Note that the receiver and driver times increase significantly when coming out of shutdown.
2. This spec is guaranteed by design and bench characterization.

Pin Functions

Pin	Name	Description
1	RO	Receiver output
2	$\overline{RE}$	Receiver output enable active LOW
3	DE	Driver output enable active HIGH
4	DI	Driver input
5	GND	Ground connection
6	A	Non-inverting driver output / receiver input
7	B	Inverting driver output / receiver input
8	V_{CC}	Positive supply

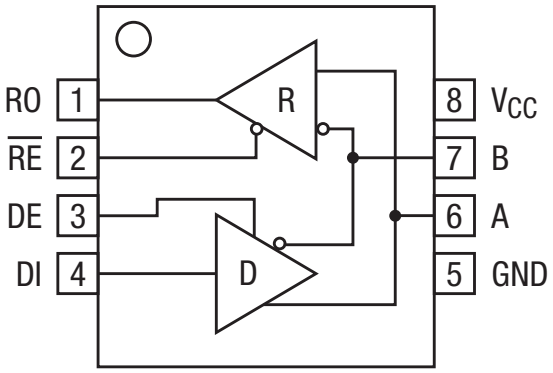

SP3485
Pinout (Top View)

Test Circuits

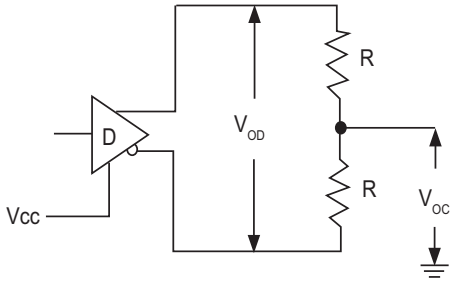

Figure 1: Driver DC Test Load Circuit

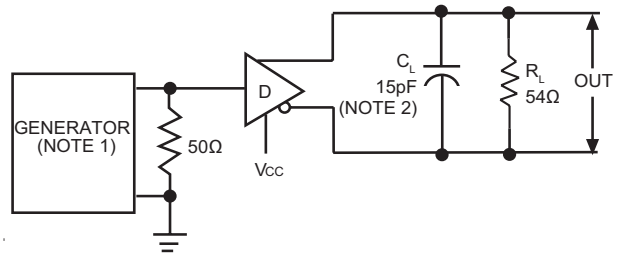

Figure 2: Driver Propagation Delay Test Circuit

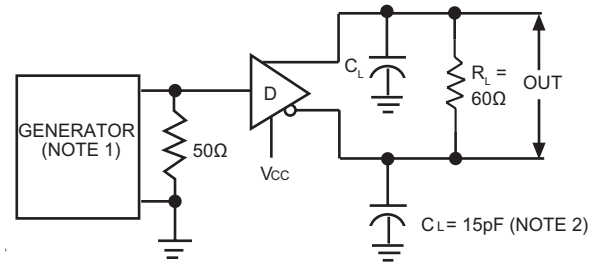

Figure 3: Driver Differential Output Delay and Transition Time Circuit.

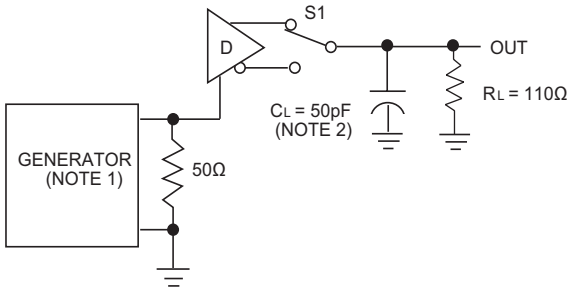

Figure 4: Driver Enable and Disable Timing Circuit, Output High

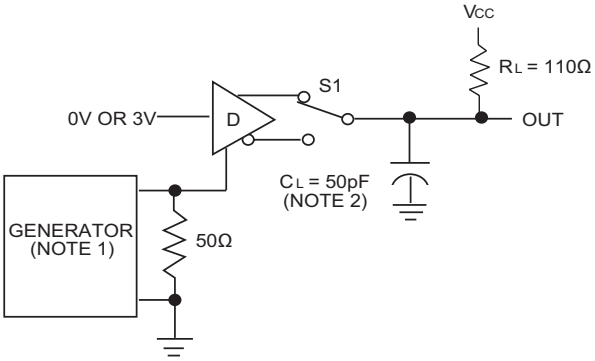

Figure 5: Driver Enable and Disable Timing Circuit, Output Low

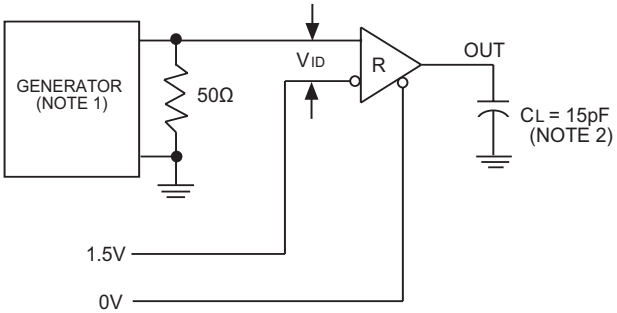

Figure 6: Receiver Propagation Delay Test Circuit

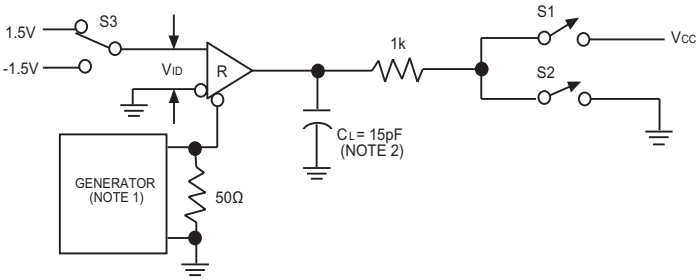

Figure 7: Receiver Enable and Disable Timing Circuit

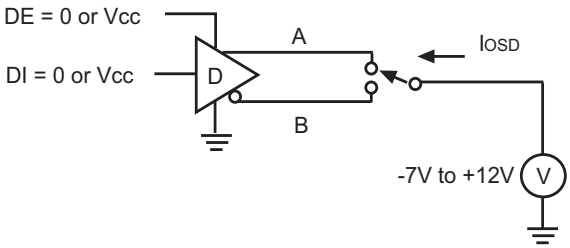

Figure 8: Driver Short Circuit Current Limit Test

NOTES
1: The input pulse is supplied by a generator with the following characteristics:
PRR = 250kHz, 50% duty cycle, t_R < 6.0ns, Z_O = 50Ω.
2: C_L includes probe and stray capacitance.

Switching Waveforms

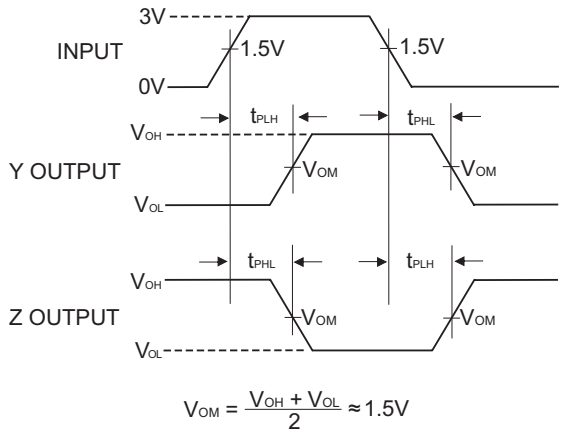

Figure 9: Driver Propagation Delay Waveforms

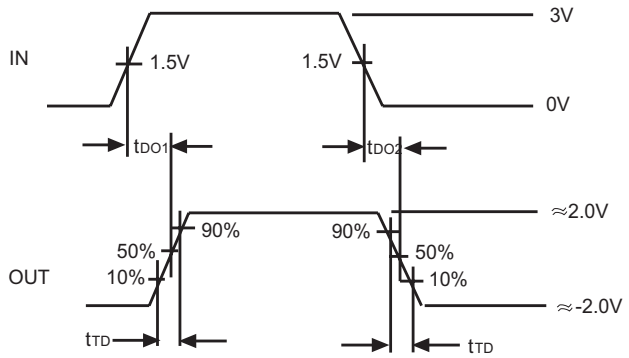

Figure 10: Driver Differential Output Delay and Transition Time Waveforms

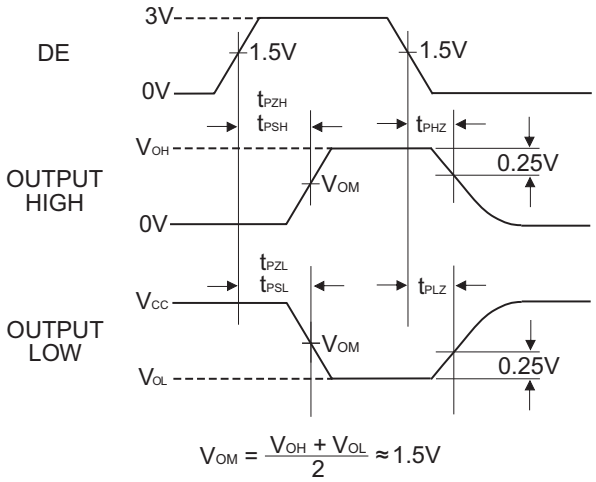

Figure 11: Driver Enable and Disable Timing Waveforms

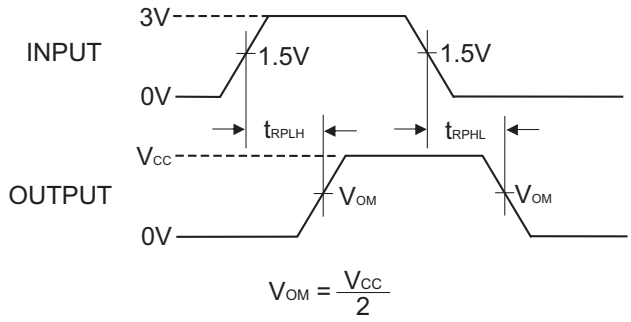

Figure 12: Receiver Propagation Delay Waveforms

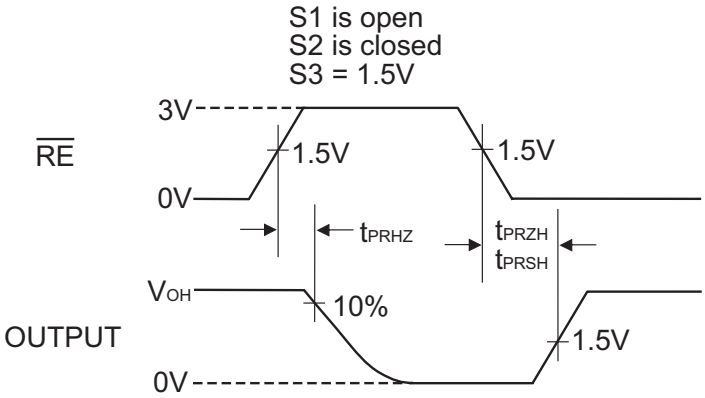

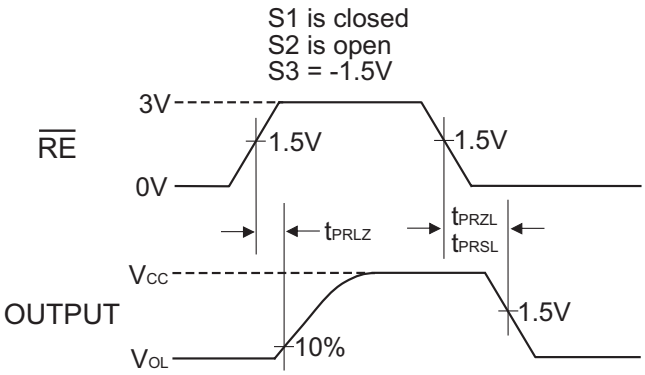

Figure 13: Receiver Enable and Disable Waveforms

Description

The SP3485 is a member in the family of 3.3V low power half-duplex transceivers that meet the electrical specifications of the RS-485 and RS-422 serial protocols. This device is pin-to-pin compatible with the MaxLinear SP481, SP483 and SP485 devices as well as popular industry standards. The SP3485 feature MaxLinear's BiCMOS process allowing low power operationwithout sacrificing performance.

Driver

The driver outputs of the SP3485 are differential outputs meeting the RS-485 and RS-422 standards. The typical voltage output swing with no load will be 0 volts to 3.3 Volts. With a load of 54Ω across the differential outputs, the drivers can maintain greater than 1.5V voltage levels.

The driver of the SP3485 has a driver enable control line which is active HIGH. A logic HIGH on DE (pin 3) will enable the differential driver outputs. A logic LOW on the DE (pin 3) will tri-state the driver outputs.

The driver of the SP3485 operates up to 10Mbps. The 250mA I_{SC} maximum limit on the driver output allows the SP3485 to withstand an infinite short circuit over the -7.0V to 12V common mode range without catastrophic damage to the IC.

Receiver

The SP3485 receiver has differential inputs with an input sensitivity of ±200mV. Input impedance of the receiver is 12kΩ minimum. A wide common mode range of -7V to 12V allows for large ground potential differences between systems. The receiver is equipped with a fail-safe feature that guarantees the receiver output will be in a HIGH state when the input is left unconnected. The receiver of the SP3485 operates up to 10Mbps.

The receiver of the SP3485 has an enable control line which is active LOW. A logic LOW on $\overline{RE}$ (pin 2) will enable the differential receiver. A logic HIGH on $\overline{RE}$ (pin 2) of the SP3485 will disable the receiver.

Low Power Shutdown Mode

Low-power shutdown mode is initiated by bringing both $\overline{RE}$ high and DE low. In shutdown, the devices typically draw only 50nA of supply current. $\overline{RE}$ and DE can be driven simultaneously; the part is guaranteed not to enter shutdown if $\overline{RE}$ is high and DE is low for less than 50ns. If the inputs are in this state for at least 600ns, the parts are guaranteed to enter shutdown.

Enable times t_{PRZH}, t_{PZH}, t_{PRZL} and t_{PZL} assume the part was not in a low-power shutdown state. Enable times t_{PRSH}, t_{PSH}, t_{PRSL} and t_{PSL} assume the parts were shut down. It takes drivers and receivers longer to become enabled from low-power shutdown mode (t_{PRSH}, t_{PSH}, t_{PRSL}, t_{PSL}) than from driver/receiver-disable mode (t_{PRZH}, t_{PZH}, t_{PRZL}, t_{PZL}).

INPUTS			OUTPUTS	
$\overline{RE}$	DE	DI	B	A
X	1	1	0	1
X	1	0	1	0
0	0	X	High-Z	
1	0	X	Shutdown	

Table 1: Transmit Function Truth Table

INPUTS			OUTPUTS
$\overline{RE}$	DE	V_A - V_B	RO
0	X	-50mV	1
0	X	-200mV	0
X	X	Open/Shorted	1
1	1	X	High-Z
1	0	X	Shutdown

Table 2: Receive Function Truth Table

Mechanical Dimensions

NSOIC8

Top View

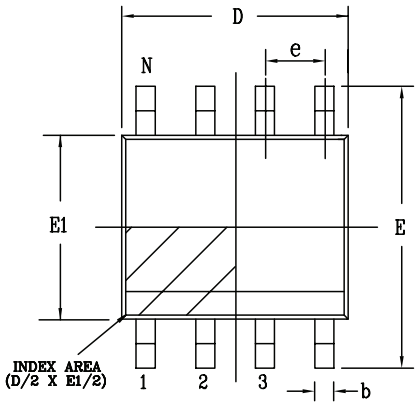

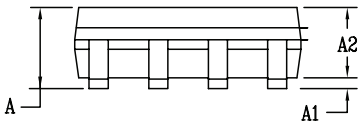

Side View

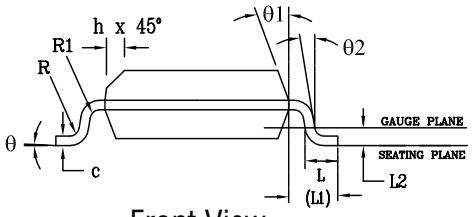

Front View

PACKAGE OUTLINE NSOIC .150" BODY JEDEC MS-012 VARIATION AA						
SYMBOLS	COMMON DIMENSIONS IN MM (Control Unit)			COMMON DIMENSIONS IN INCH (Reference Unit)		
	MIN	NOM	MAX	MIN	NOM	MAX
A	1.35	—	1.75	0.053	—	0.069
A1	0.10	—	0.25	0.004	—	0.010
A2	1.25	—	1.65	0.049	—	0.065
b	0.31	—	0.51	0.012	—	0.020
c	0.17	—	0.25	0.007	—	0.010
E	6.00 BSC			0.236 BSC		
E1	3.90 BSC			0.154 BSC		
e	1.27 BSC			0.050 BSC		
h	0.25	—	0.50	0.010	—	0.020
L	0.40	—	1.27	0.016	—	0.050
L1	1.04 REF			0.041 REF		
L2	0.25 BSC			0.010 BSC		
R	0.07	—	—	0.003	—	—
R1	0.07	—	—	0.003	—	—
q	0°	—	8°	0°	—	8°
q1	5°	—	15°	5°	—	15°
q2	0°	—	—	0°	—	—
D	4.90 BSC			0.193 BSC		
N	8					

Drawing No: POD-00000108

Revision: A

Ordering Information[1]

Part Number	Operating Temperature Range	Lead-Free	Package	Packaging Method
SP3485CN-L	0°C to 70°C	Yes[2]	8-pin SOIC	Tube
SP3485CN-L/TR				Reel
SP3485EN-L	-40°C to 85°C			Tube
SP3485EN-L/TR				Reel

NOTE:
1. Refer to www.exar.com/SP3485 for most up-to-date Ordering Information.
2. Visit www.exar.com for additional information on Environmental Rating.

Revision History

Revision	Date	Description
10/15/02	--	Legacy Sipex Datasheet
06/19/12	1.0.0	Convert to Exar Format. Update ordering information and add new Figure 8 - Driver Short Circuit Current Limit Test Circuit. Remove EOL device SP3481.
06/27/16	2.0.0	Update logo. Update description paragraph on page 1. Update timing specifications in electrical characteristics table on pages 2 and 3. Add Driver and Receiver Enable from Shutdown timing information on pages 3 and 4. Update typical supply current information on page 4. Update Figures 2, 4, 6, and 8. Update Figures 11 and 13 to add shutdown timing labels. Add low power shutdown section to page 7. Update transmit and receive truth tables on page 7. Update Receiver section on page 7.
09/06/17	2.0.1	Remove GND from Differential Output Voltage min (page 2). Added maximum junction temperature, package power dissipation and ESD rating. Update to MaxLinear logo, update format and ordering information table.

Corporate Headquarters:
5966 La Place Court
Suite 100
Carlsbad, CA 92008
Tel.:+1 (760) 692-0711
Fax: +1 (760) 444-8598
www.maxlinear.com

High Performance Analog:
48720 Kato Road
Fremont, CA 94538
Tel.: +1 (510) 668-7000
Fax: +1 (510) 668-7001
Email: serialtechsupport@exar.com
www.exar.com

The content of this document is furnished for informational use only, is subject to change without notice, and should not be construed as a commitment by MaxLinear, Inc.. MaxLinear, Inc. assumes no responsibility or liability for any errors or inaccuracies that may appear in the informational content contained in this guide. Complying with all applicable copyright laws is the responsibility of the user. Without limiting the rights under copyright, no part of this document may be reproduced into, stored in, or introduced into a retrieval system, or transmitted in any form or by any means (electronic, mechanical, photocopying, recording, or otherwise), or for any purpose, without the express written permission of MaxLinear, Inc.

Maxlinear, Inc. does not recommend the use of any of its products in life support applications where the failure or malfunction of the product can reasonably be expected to cause failure of the life support system or to significantly affect its safety or effectiveness. Products are not authorized for use in such applications unless MaxLinear, Inc. receives, in writing, assurances to its satisfaction that: (a) the risk of injury or damage has been minimized; (b) the user assumes all such risks; (c) potential liability of MaxLinear, Inc. is adequately protected under the circumstances.

MaxLinear, Inc. may have patents, patent applications, trademarks, copyrights, or other intellectual property rights covering subject matter in this document. Except as expressly provided in any written license agreement from MaxLinear, Inc., the furnishing of this document does not give you any license to these patents, trademarks, copyrights, or other intellectual property.

Company and product names may be registered trademarks or trademarks of the respective owners with which they are associated.

© 2012-2017 MaxLinear, Inc. All rights reserved

ООО «ЛайфЭлектроникс» “LifeElectronics” LLC

ИНН 7805602321 КПП 780501001 Р/С 40702810122510004610 ФАКБ "АБСОЛЮТ БАНК" (ЗАО) в г.Санкт-Петербурге К/С 30101810900000000703 БИК 044030703

Компания «Life Electronics» занимается поставками электронных компонентов импортного и отечественного производства от производителей и со складов крупных дистрибьюторов Европы, Америки и Азии.

С конца 2013 года компания активно расширяет линейку поставок компонентов по направлению коаксиальный кабель, кварцевые генераторы и конденсаторы (керамические, пленочные, электролитические), за счёт заключения дистрибьюторских договоров

Мы предлагаем:

- *Конкурентоспособные цены и скидки постоянным клиентам.*
- *Специальные условия для постоянных клиентов.*
- *Подбор аналогов.*
- *Поставку компонентов в любых объемах, удовлетворяющих вашим потребностям.*

- *Приемлемые сроки поставки, возможна ускоренная поставка.*
- *Доставку товара в любую точку России и стран СНГ.*
- *Комплексную поставку.*
- *Работу по проектам и поставку образцов.*
- *Формирование склада под заказчика.*

- *Сертификаты соответствия на поставляемую продукцию (по желанию клиента).*
- *Тестирование поставляемой продукции.*
- *Поставку компонентов, требующих военную и космическую приемку.*
- *Входной контроль качества.*
- *Наличие сертификата ISO.*

В составе нашей компании организован Конструкторский отдел, призванный помогать разработчикам, и инженерам.

Конструкторский отдел помогает осуществить:

- *Регистрацию проекта у производителя компонентов.*
- *Техническую поддержку проекта.*
- *Защиту от снятия компонента с производства.*
- *Оценку стоимости проекта по компонентам.*
- *Изготовление тестовой платы монтаж и пусконаладочные работы.*

Тел: +7 (812) 336 43 04 (многоканальный)
Email: org@lifeelectronics.ru

www.lifeelectronics.ru