REFERENCE SPECIFICATIONS

-NFC 93425 (in compliance with HE 507)

PHYSICAL CHARACTERISTICS

-INSULATOR MATERIAL: THERMOPLASTIC ,UL94V0

-CONTACT MATERIAL: BRASS

-ACCESSORIES: BRASS

-SHELLS: STEEL

ELECTRICAL CHARACTERISTICS

-NOMINAL CURRENT: 30A

-CONTACT RESISTANCE: <= 7.3 m ohms

-CONTACT/CONTACT : >=1000 V

-CONTACT/GROUND : >=1200 V

-INSULATION RESISTANCE: >=5000 MOhms

ENVIRONMENTAL CHARACTERISTICS

- CLIMATIC CATEGORY: 55/125/21

TEMPERATURE RANGE -55°C TO +125°C

DAMP HEAT STEADY STATE 21 DAYS

SALT SPRAY 24 HOURS

MECHANICAL CHARACTERISTICS

- RETENTION AGAINST TORQUE: - Threaded insert: 0.7 N.m minimum

- Female screw : 0.5 N.m minimum

NOTE RoHS INFORMATION

- The "LF" products meet european union Directives and other country regulations as described in GS-22-008.
- The housing will whistand exposure to 260°C peak temperature for 3.5 seconds in a wave solder application with a 1.6mm minimum thick circuit board. See application notes/procedures if they are available.
- Termination plating spec:
  - Ni 1.27µmi+Sn 2.5 to 7.5µ(pure bright
- Active area plating spec:
  -Ni + Gold
- Shell plating :2 to 4µm Cu + Ni + 3 to 10µmm Sn(pure bright)
- Accessories: Sn pure bright + Nickel
- Packaging spec: See GS-14-920

DBL5W5S700G30LF

Series

Shell size: **E A B C**
see sheet 3

Front accessory definition
see sheet 2

- **blank** :without accessory
- **L** :threaded insert M3
- **O** :threaded insert UNC 4-40
- **V** :female screw UNC 4-40

Layout of contacts (see sheets)

Contacts

- **S** :Socket

Termination type

- **7** Right angle/USA

Plating

- **00** 200 matings/unmatings
- **43** 500 matings/unmatings

PCB accessories definition
see sheet 2

- **A** :without accessory
- **H** :Metal brackets+harpoons for PCB 2.40mm
- **G** :Metal brackets+harpoons for PCB 1.60mm
- **M** :Metal brackets

Power contacts

- **00** :Not fitted with power contact (signal contacts always fitted)
- **30** :Fitted with power contacts 30 Amp.

See note RoHS

TABLE 1:PCB HOLE DIAMETERS

	POWER CONTACTS		ACCESSORIES
30 A	Ø2.00	Ø2.40	ø3.10
Max current power	ØA +0.1 0	PCB HOLE +/-0.1	PCB HOLE +/-0.1

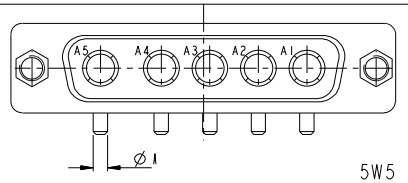

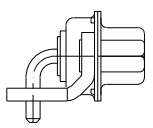

5W5 FOR EXAMPLE

rev	ecn no	dr	date
A	LS05-0113	MPE	2005-10-11
B	LS06-0208	LGO	2006-12-13
C	LS07-0085	MPE	2007/03/21
D	LS07-0273	MPE	2007/11/05
E	F09-0092	LSA	2009/09/16
-	-	-	-
-	-	-	-

www.fciconnect.com

surface - ISO 1302 | tolerance std ISO 406 ISO 1101 | projection | mm

TOLERANCES UNLESS OTHERWISE SPECIFIED

Dr	M PESSON	2005-10-11	ANGULAR	LINEAR	0.X	±0.3	size A2
Eng	P LEGARE	2005-10-11			0.XX	±0.1	Scale 2:1
Chr			0° ±2°		0.XXX	±0.05	ECN F09-0092
Appr			Product family -				Spec ref

title: SUB FEMALE DW US foot print
full power right angled solder

dwg no: C01-8639-2309 Rev. E

catalog no - CUSTOMER sheet 1 of 5

Copyright FCI.

PDM:Revised STATUS:Released Printed: Apr 28, 2015
Printed: Jun 19, 2015

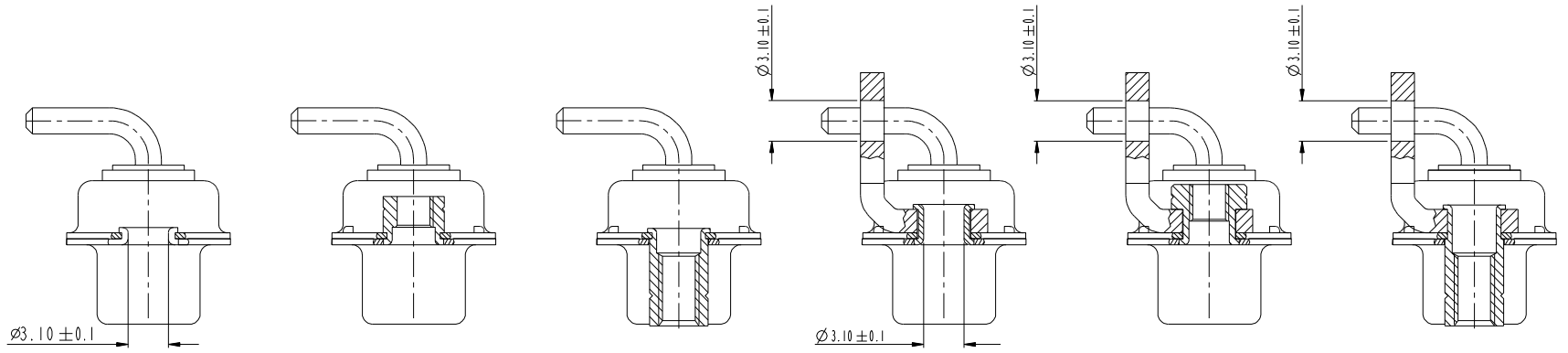

FRONT ACCESSORY	**Blank** Without	**L** insert M3 **O** insert UNC 4.40	**V** insert UNC 4.40	**Blank** Without	**L** insert M3 **O** insert UNC 4.40	**V** insert UNC 4.40
PCB ACCESSORIES	**A** Without	**A** Without	**A** Without	**M** Metal brackets	**M** Metal brackets	**M** Metal bracket

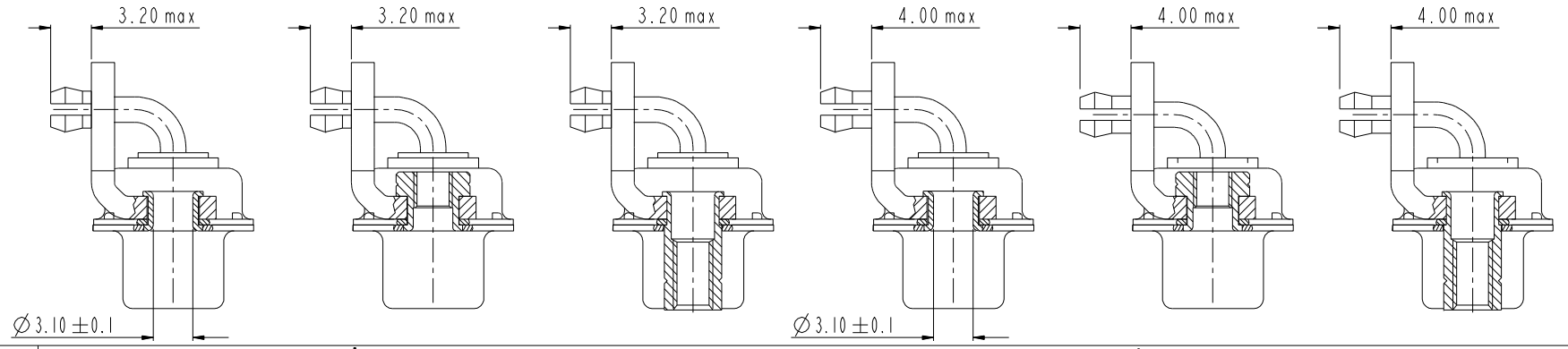

FRONT ACCESSORY	**Blank** Without	**L** insert M3 **O** insert UNC 4.40	**V** insert UNC 4.40	**Blank** Without	**L** insert M3 **O** insert UNC 4.40	**V** insert UNC 4.40
PCB ACCESSORIES	**G** Metal brackets + harpoons for PCB 1.60mm	**G** Metal brackets + harpoons for PCB 1.60mm	**G** Metal brackets + harpoons for PCB 1.60mm	**H** Metal brackets + harpoons for PCB 2.40mm	**H** Metal brackets + harpoons for PCB 2.40mm	**H** Metal brackets + harpoons for PCB 2.40mm

SCALE:4

www.fciconnect.com			surface ISO 1302	tolerance std ISO 406 ISO 1101		projection	mm
			TOLERANCES UNLESS OTHERWISE SPECIFIED				
Dr	M PESSON	2005-10-11	ANGULAR	LINEAR	0.X ±0.3	size A2	Scale 2:1
Eng	P LEGARE	2005-10-11			0.XX ±0.1		
Chr			0° ±2°		0.XXX ±0.05	ECN	F09-0092
Appr			Product family		-	Spec ref	
FCI	title SUB FEMALE DW US foot print full power right angled solder				dwg no C01-8639-2309		Rev. E
	catalog no				CUSTOMER		sheet 2 of 5

Copyright FCI.

PART NUMBER	AMPS	MATINGS/ UNMATINGS	FRONT ACCESSORY	PCB ACCESSORIES
D*xWxS700A30LF	30	200	without	without
D*LxWxS700A30LF	30	200	insert M3	without
D*OxWxS700A30LF	30	200	insert UNC 4.40	without
D*VxWxS700A30LF	30	200	female screw UNC 4.40	without
D*xWxS700H30LF	30	200	without	metal bracket+harpoon PCB 2.40mm
D*LxWxS700H30LF	30	200	insert M3	metal bracket+harpoon PCB 2.40mm
D*OxWxS700H30LF	30	200	insert UNC 4.40	metal bracket+harpoon PCB 2.40mm
D*VxWxS700H30LF	30	200	female screw UNC 4.40	metal bracket+harpoon PCB 2.40mm
D*xWxS700G30LF	30	200	without	metal bracket+harpoon PCB 1.60mm
D*LxWxS700G30LF	30	200	insert M3	metal bracket+harpoon PCB 1.60mm
D*OxWxS700G30LF	30	200	insert UNC 4.40	metal bracket+harpoon PCB 1.60mm
D*VxWxS700G30LF	30	200	female screw UNC 4.40	metal bracket+harpoon PCB 1.60mm
D*xWxS700M30LF	30	200	without	metal bracket
D*LxWxS700M30LF	30	200	insert M3	metal bracket
D*OxWxS700M30LF	30	200	insert UNC 4.40	metal bracket
D*VxWxS700M30LF	30	200	female screw UNC 4.40	metal bracket

shell size #	LAYOUTS xWx
E	2V2
A	3V3
A	3W3
B	5W5
C	8W8

PART NUMBER	AMPS	MATINGS/ UNMATINGS	FRONT ACCESSORY	PCB ACCESSORIES
D*xWxS743A30LF	30	500	without	without
D*LxWxS743A30LF	30	500	insert M3	without
D*OxWxS743A30LF	30	500	insert UNC 4.40	without
D*VxWxS743A30LF	30	500	female screw UNC 4.40	without
D*xWxS743H30LF	30	500	without	metal bracket+harpoon PCB 2.40mm
D*LxWxS743H30LF	30	500	insert M3	metal bracket+harpoon PCB 2.40mm
D*OxWxS743H30LF	30	500	insert UNC 4.40	metal bracket+harpoon PCB 2.40mm
D*VxWxS743H30LF	30	500	female screw UNC 4.40	metal bracket+harpoon PCB 2.40mm
D*xWxS743G30LF	30	500	without	metal bracket+harpoon PCB 1.60mm
D*LxWxS743G30LF	30	500	insert M3	metal bracket+harpoon PCB 1.60mm
D*OxWxS743G30LF	30	500	insert UNC 4.40	metal bracket+harpoon PCB 1.60mm
D*VxWxS743G30LF	30	500	female screw UNC 4.40	metal bracket+harpoon PCB 1.60mm
D*xWxS743M30LF	30	500	without	metal bracket
D*LxWxS743M30LF	30	500	insert M3	metal bracket
D*OxWxS743M30LF	30	500	insert UNC 4.40	metal bracket
D*VxWxS743M30LF	30	500	female screw UNC 4.40	metal bracket

Copyright FCI.

www.fciconnect.com

surface - ISO 1302 | tolerance std ISO 406 ISO 1101 | projection | mm

TOLERANCES UNLESS OTHERWISE SPECIFIED

Dr	M PESSON	2005-10-11	ANGULAR	LINEAR	0.X	±0.3	size A2	Scale 2:1
Eng	P LEGARE	2005-10-11			0.XX	±0.1		
Chr			0° ±2°		0.XXX	±0.05	ECN	F09-0092
Appr			Product family			-	Spec ref	

title: SUB FEMALE DW US foot print full power right angled solder

dwg no: C01-8639-2309 Rev. E

catalog no | CUSTOMER | sheet 3 of 5

PDM:ReviE STATUS:Released Printed: Apr 28, 2015
PDM:ReviE STATUS:Released Printed: Jun 19, 2015

2V2

LAYOUT AND CONNECTOR DIMENSIONS

For PCB hole diameters see table 1 sheet 1

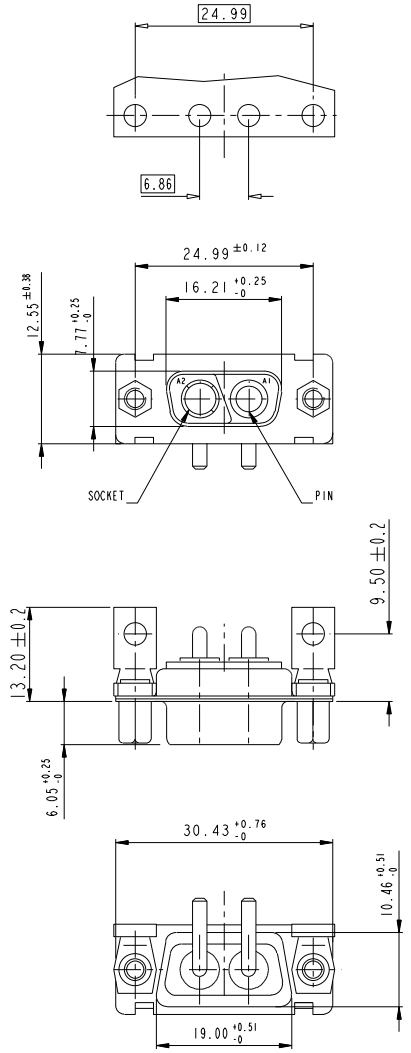

3V3

LAYOUT AND CONNECTOR DIMENSIONS

For PCB hole diameters see table 1 sheet 1

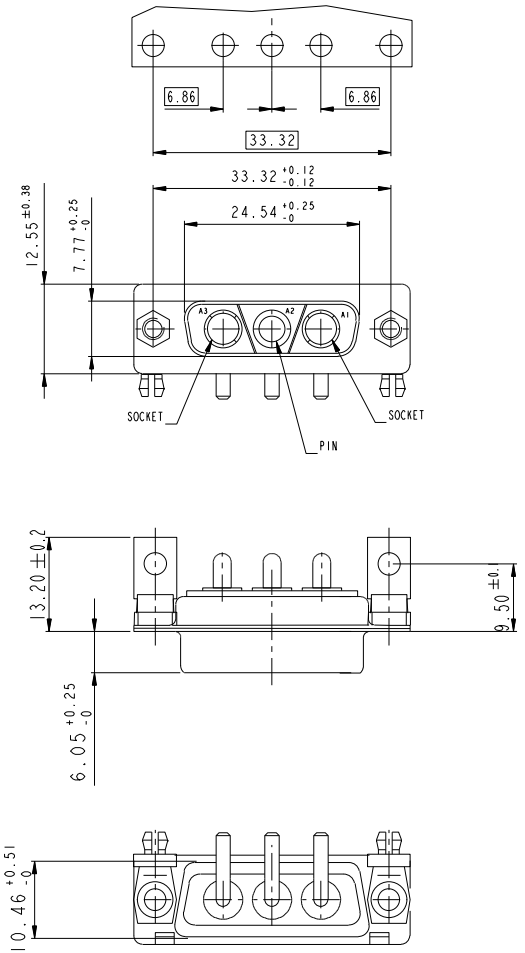

3W3

LAYOUT AND CONNECTOR DIMENSIONS

For PCB hole diameters see table 1 sheet 1

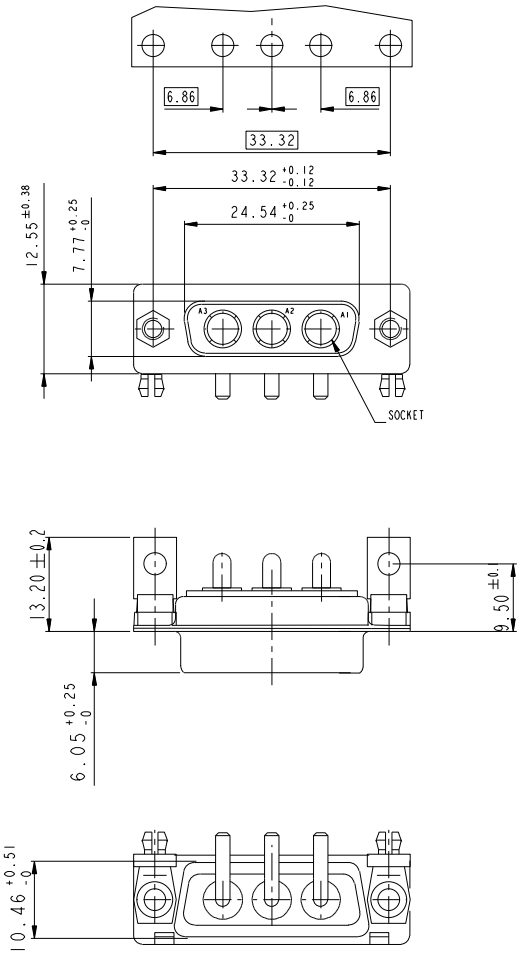

SIDE VIEW FOR ALL LAYOUTS

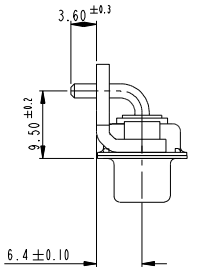

www.fciconnect.com			surface ISO 1302		tolerance std ISO 406 ISO 1101		projection	mm	
			TOLERANCES UNLESS OTHERWISE SPECIFIED						
Dr	M PESSON	2005-10-11	ANGULAR	LINEAR	0.X	±0.3	size A2	Scale 2:1	
Eng	P LEGARE	2005-10-11			0.XX	±0.1			
Chr			0° ±2°		0.XXX	±0.05	ECN F09-0092		
Appr			Product family -				Spec ref		
FCI	title: SUB FEMALE DW US foot print full power right angled solder						dwg no C01-8639-2309		Rev. E
	catalog no						CUSTOMER		sheet 4 of 5

Copyright FCI.

PDM:ReVE STATUS:Released Printed: Apr 28, 2015
Printed: Jun 19, 2015

5W5

LAYOUT AND CONNECTOR DIMENSIONS

For PCB hole diameters see table 1 sheet 1

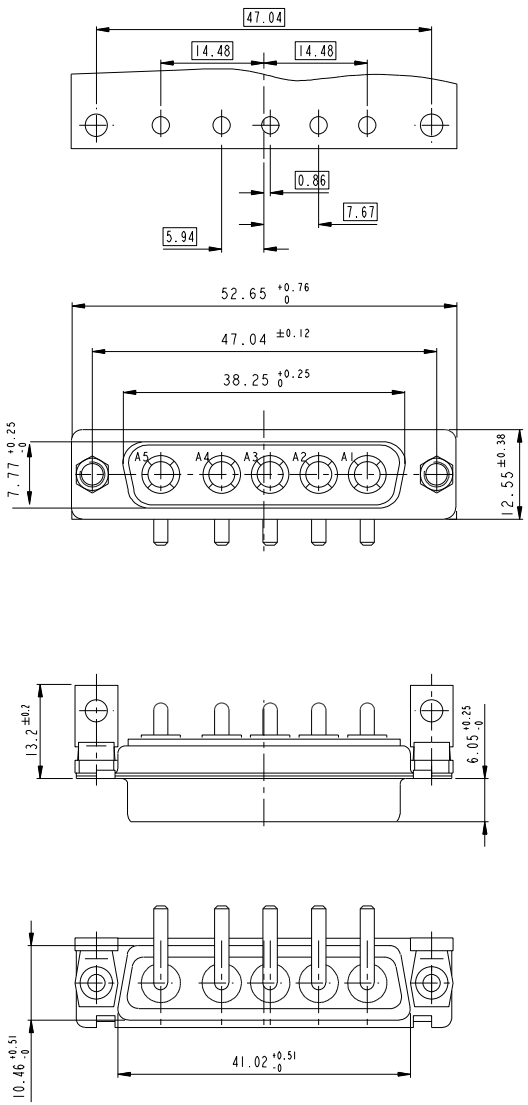

8W8

LAYOUT AND CONNECTOR DIMENSIONS

For PCB hole diameters see table 1 sheet 1

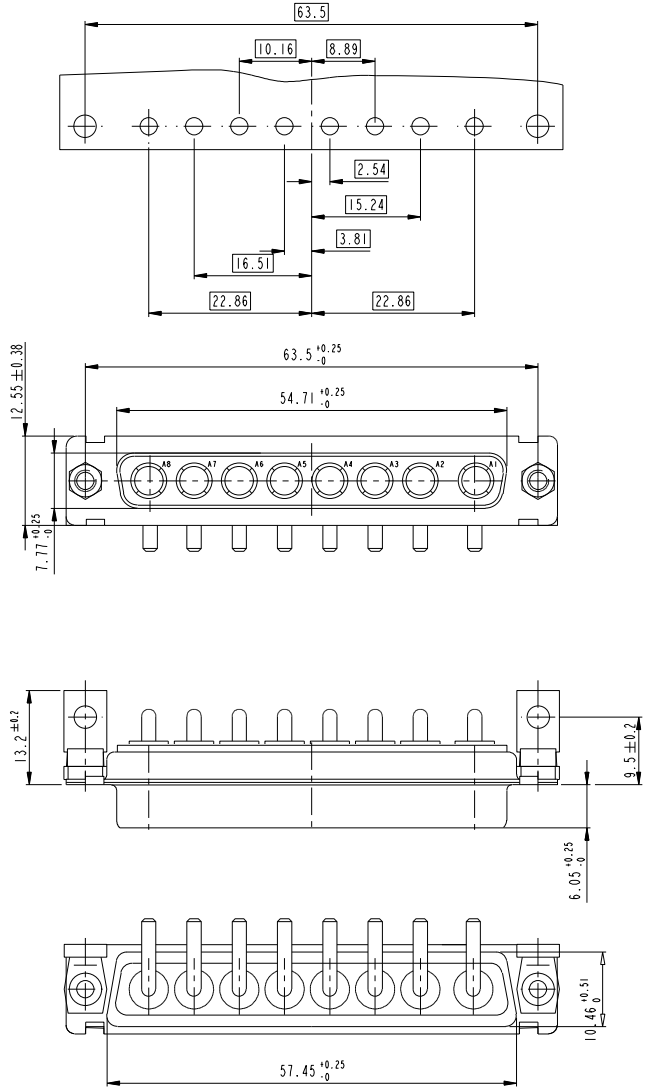

www.fciconnect.com			surface ISO 1302		tolerance std ISO 406 ISO 1101		projection	mm
			TOLERANCES UNLESS OTHERWISE SPECIFIED					
Dr	M PESSON	2005-10-11	ANGULAR	LINEAR	0.X	±0.3	size A2	Scale 2:1
Eng	P LEGARE	2005-10-11			0.XX	±0.1		
Chr			0° ±2°		0.XXX	±0.05	ECN	F09-0092
Appr			Product family			-	Spec ref	
FCI	title SUB FEMALE DW US foot print full power right angled solder				dwg no C01-8639-2309			Rev. E
	catalog no				CUSTOMER		sheet 5 of 5	

Copyright FCI.

PDM: Rev:E STATUS: Released Printed: Apr 28, 2015
PDM: Rev:E STATUS: Released Printed: Jun 19, 2015

LifeElectronics
Живое партнерство

ООО «ЛайфЭлектроникс» **“LifeElectronics” LLC**

ИНН 7805602321 КПП 780501001 Р/С 40702810122510004610 ФАКБ "АБСОЛЮТ БАНК" (ЗАО) в г.Санкт-Петербурге К/С 30101810900000000703 БИК 044030703

Компания «Life Electronics» занимается поставками электронных компонентов импортного и отечественного производства от производителей и со складов крупных дистрибьюторов Европы, Америки и Азии.

С конца 2013 года компания активно расширяет линейку поставок компонентов по направлению коаксиальный кабель, кварцевые генераторы и конденсаторы (керамические, пленочные, электролитические), за счёт заключения дистрибьюторских договоров

Мы предлагаем:

- *Конкурентоспособные цены и скидки постоянным клиентам.*
- *Специальные условия для постоянных клиентов.*
- *Подбор аналогов.*
- *Поставку компонентов в любых объемах, удовлетворяющих вашим потребностям.*

- *Приемлемые сроки поставки, возможна ускоренная поставка.*
- *Доставку товара в любую точку России и стран СНГ.*
- *Комплексную поставку.*
- *Работу по проектам и поставку образцов.*
- *Формирование склада под заказчика.*

- *Сертификаты соответствия на поставляемую продукцию (по желанию клиента).*
- *Тестирование поставляемой продукции.*
- *Поставку компонентов, требующих военную и космическую приемку.*
- *Входной контроль качества.*
- *Наличие сертификата ISO.*

В составе нашей компании организован Конструкторский отдел, призванный помогать разработчикам, и инженерам.

Конструкторский отдел помогает осуществить:

- *Регистрацию проекта у производителя компонентов.*
- *Техническую поддержку проекта.*
- *Защиту от снятия компонента с производства.*
- *Оценку стоимости проекта по компонентам.*
- *Изготовление тестовой платы монтаж и пусконаладочные работы.*

Тел: +7 (812) 336 43 04 (многоканальный)
Email: org@lifeelectronics.ru

www.lifeelectronics.ru